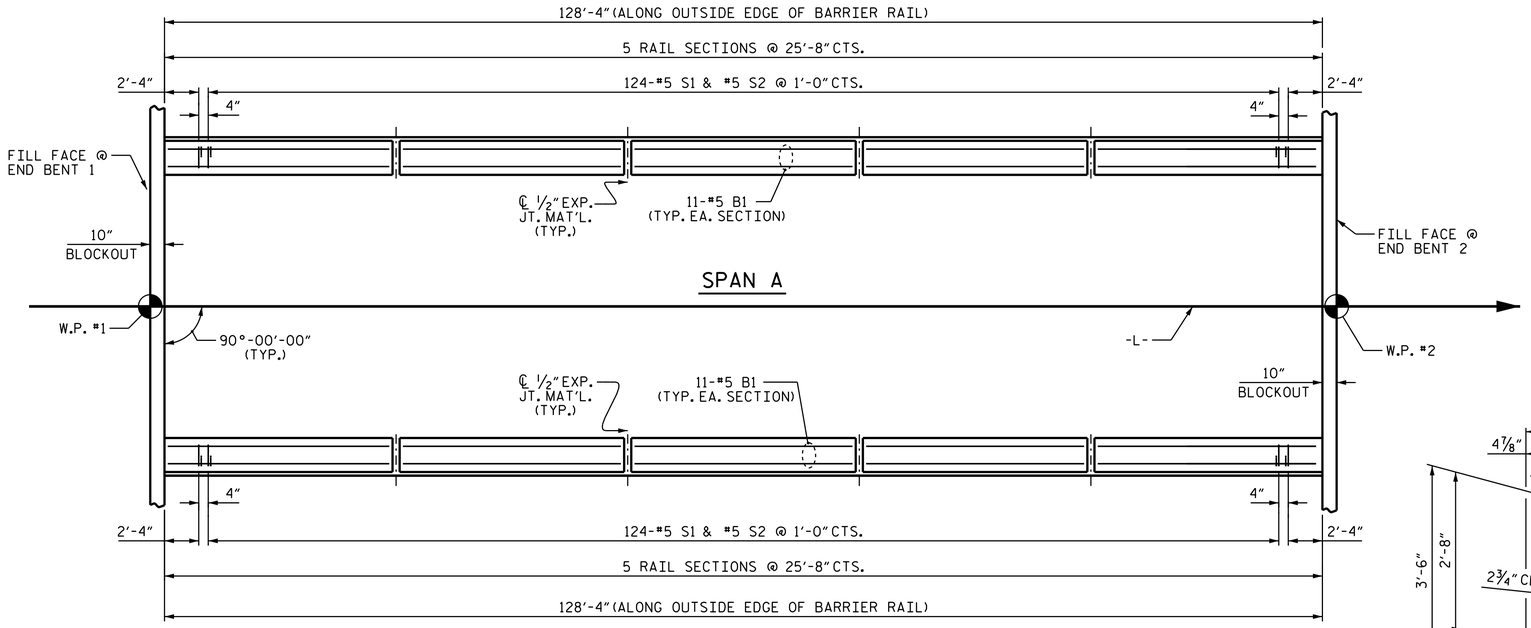

PLAN

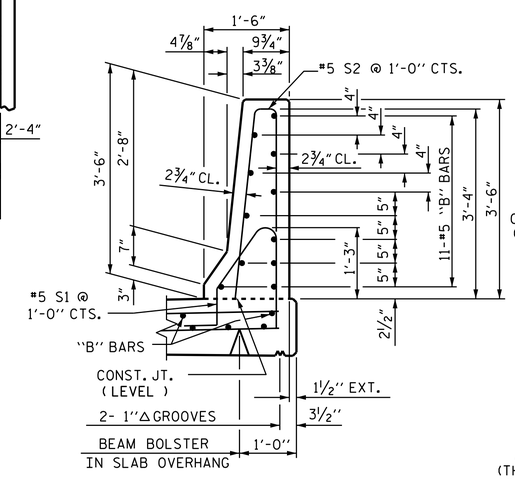

SECTION THRU RAIL

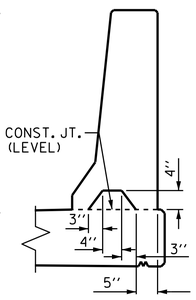

SECTION S-S

AT DAM IN OPEN JOINT
(THIS IS TO BE USED ONLY WHEN SLIP FORM IS USED)

NOTES

THE BARRIER RAIL SHALL NOT BE CAST UNTIL ALL SLAB CONCRETE IN THAT SPAN HAS BEEN CAST AND HAS REACHED A MINIMUM COMPRESSIVE STRENGTH OF 3,000 PSI.

ALL REINFORCING STEEL IN BARRIER RAILS SHALL BE EPOXY COATED.

GROOVED CONTRACTION JOINTS, 1/2" IN DEPTH, SHALL BE TOOLED IN ALL EXPOSED FACES OF THE BARRIER RAIL AND IN ACCORDANCE WITH ARTICLE 825-10(B) OF THE STANDARD SPECIFICATIONS. THE CONTRACTION JOINT SHALL BE LOCATED AT EACH THIRD POINT BETWEEN BARRIER RAIL EXPANSION JOINTS. ONLY ONE CONTRACTION JOINT IS REQUIRED AT MIDPOINT OF BARRIER RAIL SEGMENTS LESS THAN 20 FEET IN LENGTH AND NO CONTRACTION JOINTS ARE REQUIRED FOR THOSE SEGMENTS LESS THAN 10 FEET IN LENGTH.

BAR TYPES

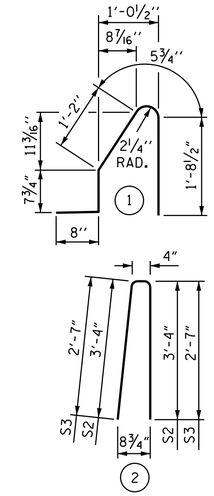

ALL BAR DIMENSIONS ARE OUT TO OUT

BILL OF MATERIAL

FOR CONCRETE BARRIER RAIL ONLY

BAR	NO.	SIZE	TYPE	LENGTH	WEIGHT
* B1	110	#5	STR	25'-3"	2897
* S1	260	#5	1	4'-8"	1266
* S2	252	#5	2	7'-0"	1840
* S3	8	#5	2	5'-6"	46

* EPOXY COATED REINFORCING STEEL	6,049 LBS.
CLASS AA CONCRETE	34.9 CU. YDS.
CONCRETE BARRIER RAIL	256.7 LIN. FT.

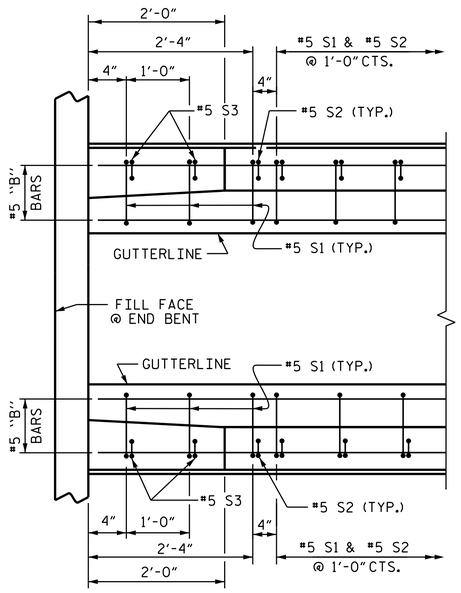

PLAN

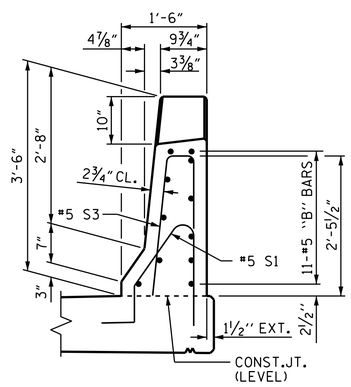

END VIEW

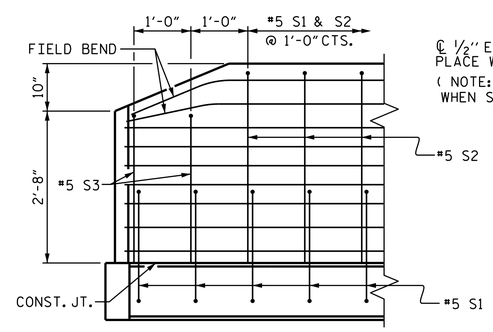

SIDE VIEW

END OF RAIL DETAILS

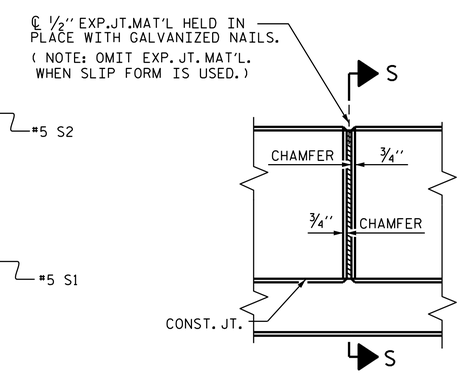

ELEVATION AT EXPANSION JOINTS

BARRIER RAIL DETAILS

PROJECT NO. B-5818
ANSON COUNTY
STATION: 27+79.00 -L-

DocuSigned by:
DEBRAH ABATACO

NORTH CAROLINA PROFESSIONAL SEAL 35647 ENGINEER ADAM A. COLE
1/22/2021

STATE OF NORTH CAROLINA
DEPARTMENT OF TRANSPORTATION
RALEIGH

STANDARD
CONCRETE BARRIER RAIL

DRAWN BY : M. G. SHAIKH DATE : 01/2020
CHECKED BY : H. LOCKLEAR DATE : 02/2020
DESIGN ENGINEER OF RECORD: REZA KOUCHEKI DATE : 11/2019

DOCUMENT NOT CONSIDERED FINAL UNLESS ALL SIGNATURES COMPLETED

REVISIONS							SHEET NO.
NO.	BY:	DATE:	NO.	BY:	DATE:		S-13
1			3				TOTAL SHEETS
2			4				24

22-JAN-2021 12:21
R:\Structures\Final Plans\400_027_B-5818_SMU_ BR_0013_030011.dgn
gacole

STD. NO. CBR1 (SHT 2)