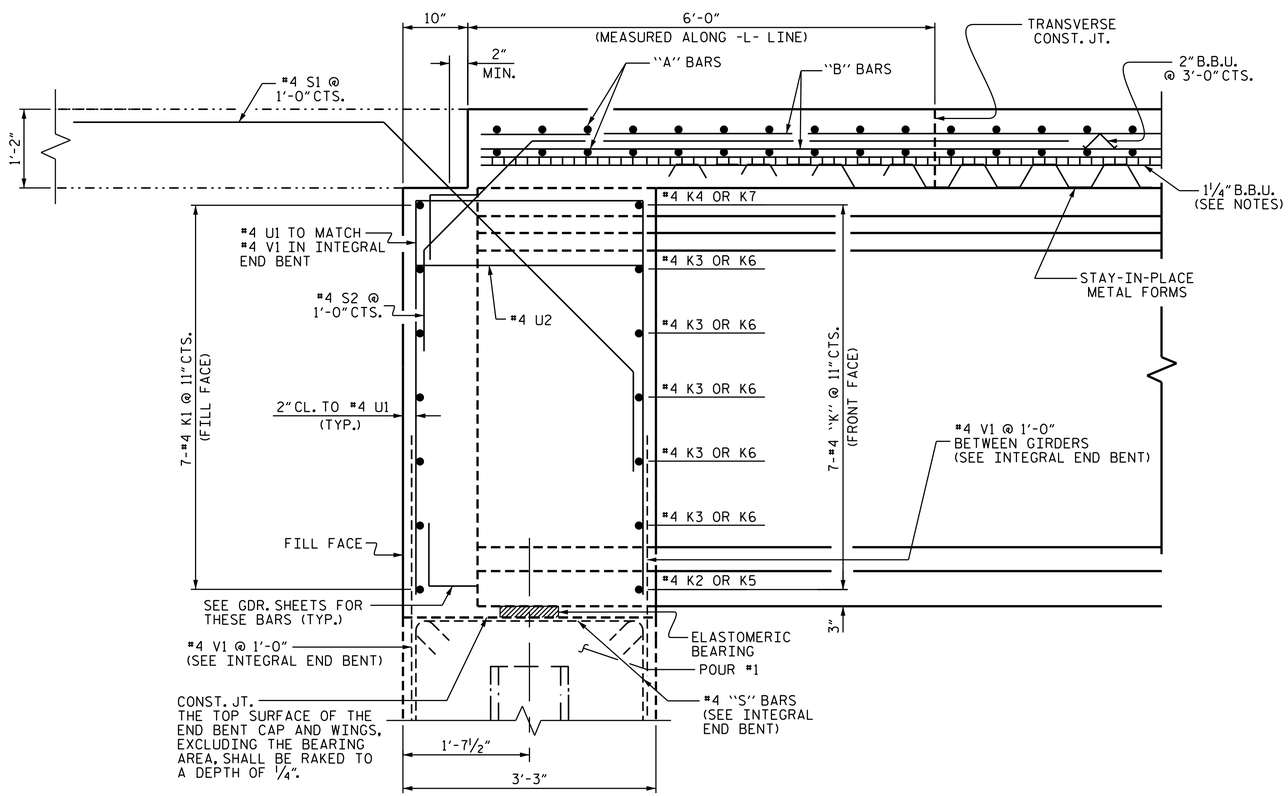

SECTION THRU INTEGRAL END BENT

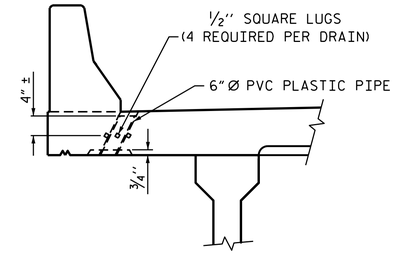

ELEVATION

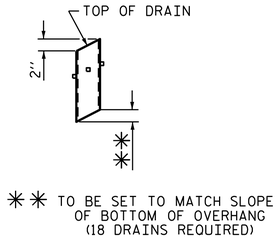

PIPE DETAIL

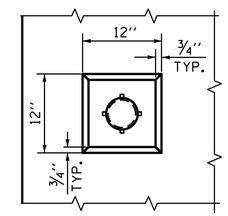

PLAN OF RECESS

TOP OF FLOOR DRAINS TO BE SET ⅜" BELOW SURFACE OF SLAB.

4 - ½" SQUARE LUGS TO BE GLUED TO THE P.V.C. PLASTIC PIPE AT EQUAL SPACES AROUND THE PIPE DRAIN APPROXIMATELY 4" FROM THE TOP OF THE PIPE.

THE 6" Ø PVC PLASTIC PIPE AND FITTINGS SHALL BE SCHEDULE 40 AND CONFORM TO ASTM D1785.

DRAIN DETAILS

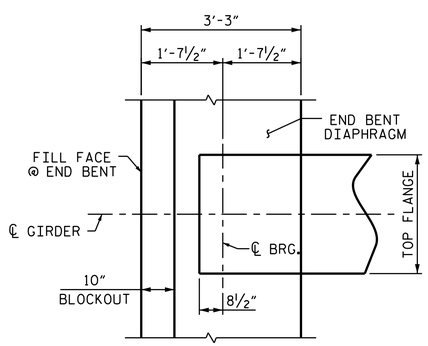

PLAN OF GIRDER AT INTEGRAL END BENT

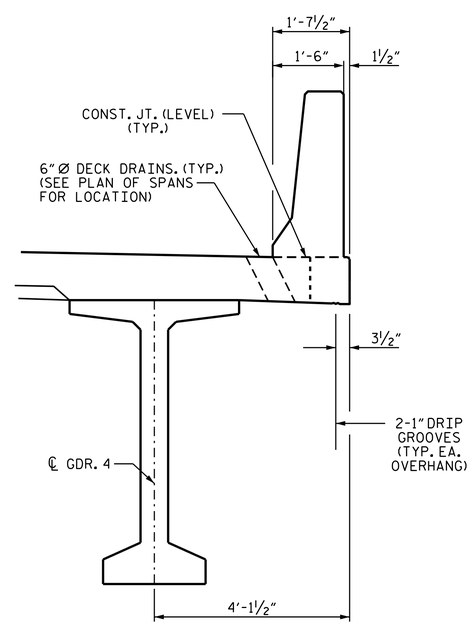

TYPICAL SECTION @ MIDSPAN

(OVERHANG FOR DRIP GROOVES)

PROJECT NO. B-5818

ANSON COUNTY

STATION: 27+79.00 -L-

SHEET 2 OF 2

STATE OF NORTH CAROLINA
DEPARTMENT OF TRANSPORTATION
RALEIGH

SUPERSTRUCTURE
TYPICAL SECTION

DocuSigned by:
02EE938FA8674C5...

NORTH CAROLINA PROFESSIONAL SEAL 35647 ENGINEER ADAM A. COLE

1/22/2021

DOCUMENT NOT CONSIDERED FINAL UNLESS ALL SIGNATURES COMPLETED

REVISIONS						SHEET NO.
NO.	BY:	DATE:	NO.	BY:	DATE:	S-6
1			3			TOTAL SHEETS
2			4			24

DRAWN BY : M. G. SHAIKH DATE : 01/2020
CHECKED BY : H. LOCKLEAR DATE : 02/2020
DESIGN ENGINEER OF RECORD: REZA KAUCHEKI DATE : 11/2019

22-JAN-2021 12:21
R:\Structures\Final Plans\400_013_B-5818_SMU_ TS_006_030011.dgn
aacole