DocuSign Envelope ID: F7DF7B14-B392-4A73-9004-1B08BC60D82F

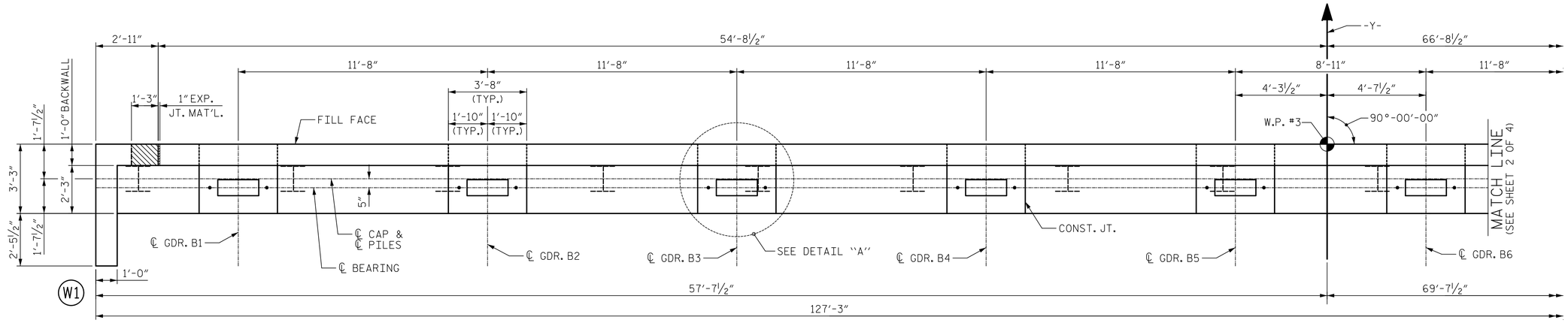

PLAN

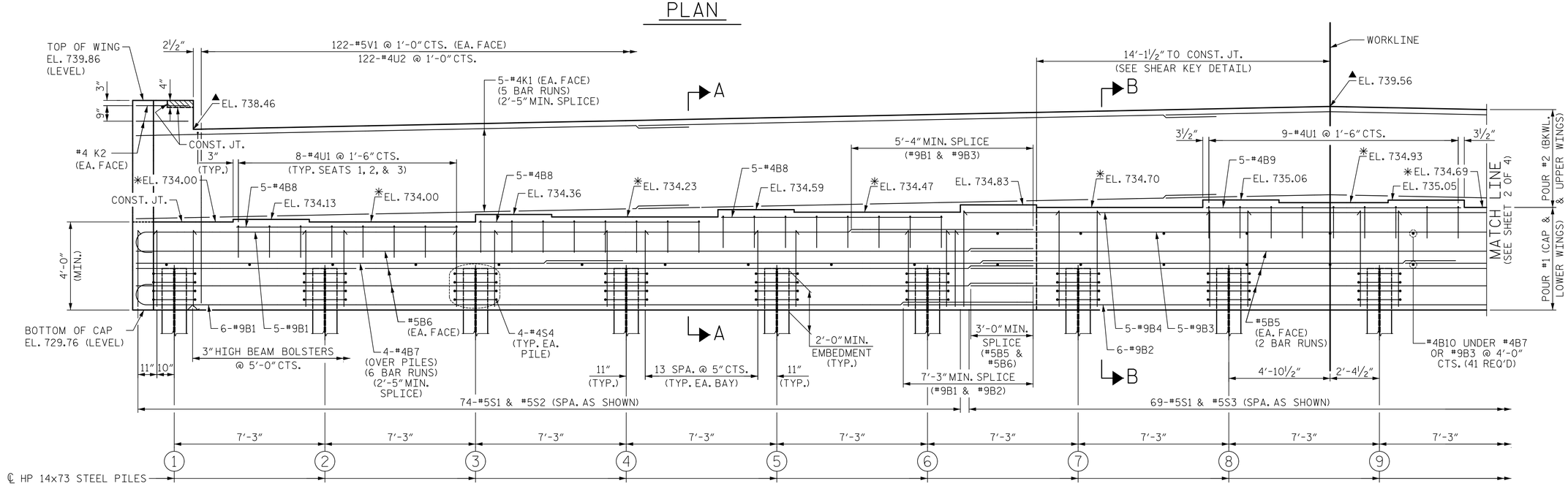

ELEVATION

(SEE SECTIONS ON SHEET 4 OF 4 FOR CORRUGATED METAL CAN DETAILS)

NOTES:

STIRRUPS IN CAP MAY BE SHIFTED AS NECESSARY TO CLEAR ANCHOR BOLTS.

BACKWALL SHALL BE PLACED BEFORE APPLYING THE EPOXY PROTECTIVE COATING.

THE TOP SURFACE AREAS OF THE END BENT CAPS SHALL BE CURED IN ACCORDANCE WITH THE STANDARD SPECIFICATIONS, EXCEPT THE MEMBRANE CURING COMPOUND METHOD SHALL NOT BE USED.

THE TOP SURFACE OF THE CAP EXCEPT THE BRIDGE SEAT BUILD-UPS SHALL BE SLOPED TRANSVERSELY FROM THE FILL FACE TO THE BACK FACE AT THE RATE OF 2%.

THE CONCRETE IN THE SHADED AREA OF THE WINGS SHALL BE POURED AFTER THE BARRIER RAIL IS CAST IF SLIP FORMING IS USED, SEE SHEET 2 OF 4.

✳ FOR LOCATION OF ELEVATION BETWEEN BUILDUPS, SEE SECTIONS ON SHEET 4 OF 4.

▲ ELEVATION TAKEN ALONG FILL FACE OF BACKWALL.

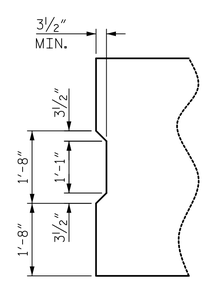

SHEAR KEY DETAIL

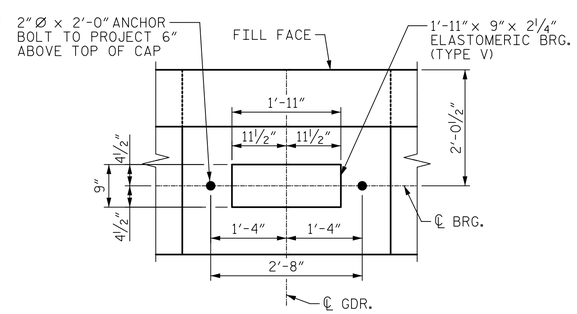

DETAIL "A"

(TYPICAL AT EACH BEARING)

Mead & Hunt
111 E. Hargett Street
Suite 300
Raleigh, NC 27601
919-714-8670
meadhunt.com
NC License No. F-1235

NORTH CAROLINA PROFESSIONAL SEAL 043177 ENGINEER JOHN S. HOBSON

DocuSigned by: Jack Hobson 5B6E7C2B67004AB... 4/16/2020

DOCUMENT NOT CONSIDERED FINAL UNLESS ALL SIGNATURES COMPLETED

PROJECT NO. R-4707

GUILFORD COUNTY

STATION: 41+39.51 -Y-

SHEET 1 OF 4

STATE OF NORTH CAROLINA
DEPARTMENT OF TRANSPORTATION
RALEIGH

SUBSTRUCTURE

END BENT 2

REVISIONS						SHEET NO.
NO.	BY:	DATE:	NO.	BY:	DATE:	S-30
1			3			TOTAL SHEETS
2			4			39

DRAWN BY :	J.S. HOBSON	DATE :	02/04/19
CHECKED BY :	A.J. FORFA	DATE :	02/18/19
DESIGN ENGINEER OF RECORD :	J.S. HOBSON	DATE :	02/07/20