DocuSign Envelope ID: 192E6B53-77AF-484C-97F4-0F2500F0290B

5/14/99

Kimley»Horn ©2018
421 FAYETTEVILLE STREET, SUITE 600
RALEIGH, NC 27601

RIGHT-OF-WAY REV.

CONST. REV.

PROJECT REFERENCE NO.	SHEET NO.
U-2579BA	STREAM – 2D-3
R/W SHEET NO.	

HYDRAULIC DESIGN ENGINEER

NORTH CAROLINA PROFESSIONAL SEAL 044608 ENGINEER JENNIFER L. MURPHY

DocuSigned by: Jennifer Murphy 3AD879847F0DB40D... 3/3/2020

DOCUMENT NOT CONSIDERED FINAL UNLESS ALL SIGNATURES COMPLETED

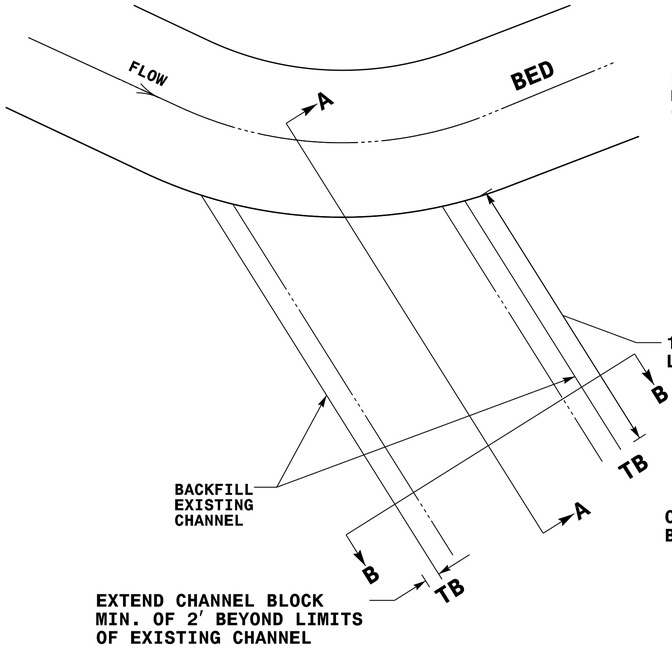

PLAN VIEW

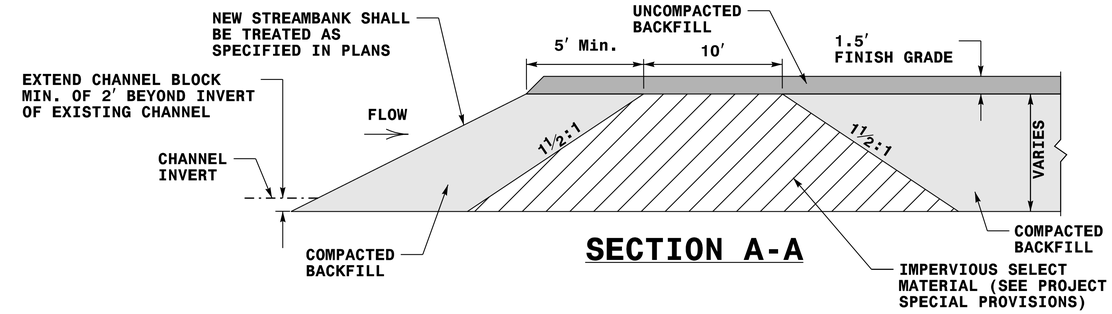

SECTION A-A

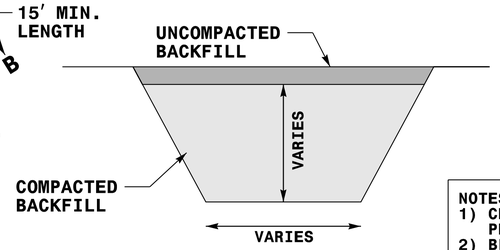

SECTION B-B

STREAM PLUG

NOT TO SCALE

NOTES:
1) CHANNEL BLOCK SHALL BE INSTALLED IN ACCORDANCE WITH THE PROJECT SPECIFICATIONS.
2) BLOCK SHOULD BE INSTALLED AT THE INTERFACE BETWEEN EXISTING CHANNEL AND PROPOSED CHANNEL.
3) BOTTOM OF BLOCK SHOULD BE A MINIMUM OF 2' BELOW THE INVERT OF THE EXISTING CHANNEL.
4) BLOCK SHOULD EXTEND A MINIMUM OF 2' BEYOND THE LIMITS OF THE EXISTING STREAM CHANNEL.
5) INSTALL EROSION CONTROL MATTING AND SEED IN ACCORDANCE WITH THE PROJECT SPECIFICATIONS IMMEDIATELY AFTER GRADING.
6) COMPACT BACKFILL TO EXTENT POSSIBLE OR AT THE DIRECTION OF THE ENGINEER.

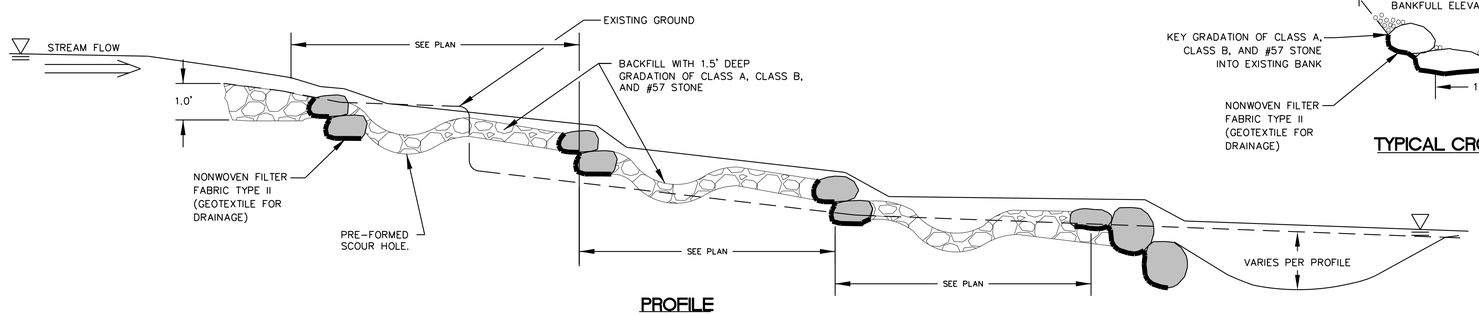

PROFILE

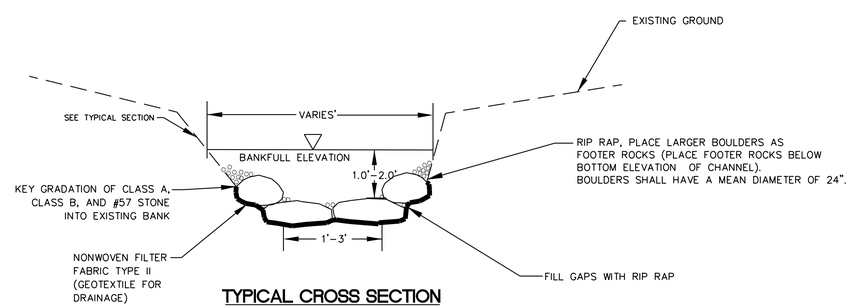

TYPICAL CROSS SECTION

ROCK STEP POOL

NOT TO SCALE

3/3/2020
U-2579ba_stream_dtl.dgn