DocuSign Envelope ID: 28EF05A4-2061-400A-9A51-CB2464BAD219

PROJECT REFERENCE NO.	SHEET NO.
R-5797	2C-9

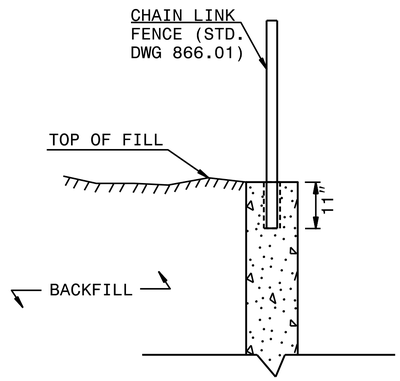

SECTION A-A
RETAINING WALL

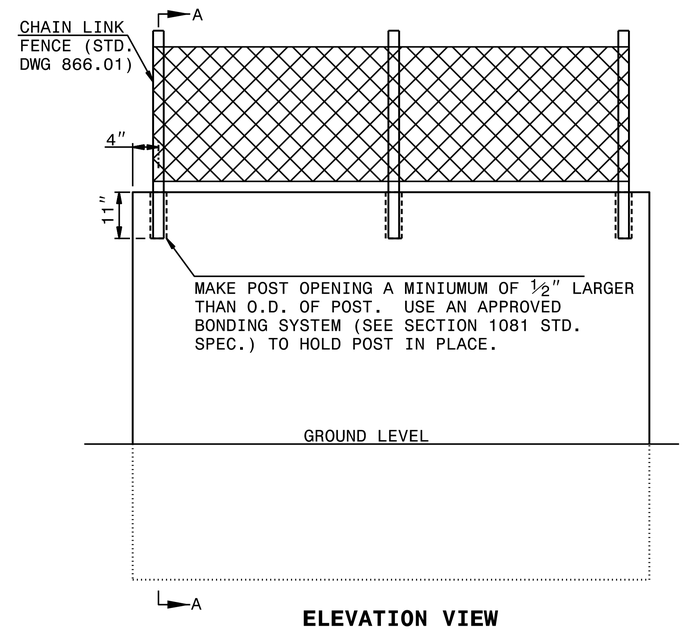

ELEVATION VIEW
OF RETAINING WALL

EMBED CHAIN LINK FENCE 11″ INTO PROPOSED WALL IN A SLEEVE OR BLOCKOUT WITH EPOXY OR CONCRETE GROUT ANCHORING SYSTEM. PRE-MEASURE AND CENTER THE PROPOSED FENCE ON TOP OF WALL FOR POST SPACINGS. IFF DRILLING THE HOLES FOR POSTS, USE A ROTARY DRILL TO DRILL HOLES IN THE CONCRETE. NO IMPACT DRILLS WILL BE ALLOWED, TO ELIMINATE ANY POSSIBILITY OF STRUCTURAL DAMAGES TO THE PROPOSED WALL.

1/5/2021 | 11:39:01 EST

NORTH CAROLINA PROFESSIONAL SEAL 022966 ENGINEER JOEL S. HOWERTON

DocuSigned by: Joel S. Howerton
B73F3D17DCDC45F...

DOCUMENT NOT CONSIDERED FINAL UNLESS ALL SIGNATURES COMPLETED

CONTRACT STANDARDS AND DEVELOPMENT UNIT
Office 919-707-6950 FAX 919-250-4119

CHAIN LINK FENCE ON RETAINING WALL

ORIGINAL BY:		DATE:	
MODIFIED BY:	K.A. KEMPF	DATE:	SEP. 2017
CHECKED BY:		DATE:	
FILE SPEC.:	usr/detials/jhowerton/chain link on retaining wall.dgn		

$$$$$$SYSTIME$$$$$$
$$$$$$$$$$$$$$$$DGN$$$$$$$$$$$$$$$$$$$$
$$$$USERNAME$$$$