DocuSign Envelope ID: BA8D1BA6-D889-4D72-9E82-52590B1A385F

SUPERSTRUCTURE REINFORCING STEEL LENGTHS ARE BASED ON THE FOLLOWING MINIMUM SPLICE LENGTHS

BAR SIZE	SUPERSTRUCTURE EXCEPT APPROACH SLABS, PARAPET, AND BARRIER RAIL		APPROACH SLABS		PARAPET AND BARRIER RAIL
	EPOXY COATED	UNCOATED	EPOXY COATED	UNCOATED	
#4	2'-0"	1'-9"	2'-0"	1'-9"	2'-9"
#5	2'-6"	2'-2"	2'-6"	2'-2"	3'-5"
#6	3'-0"	2'-7"	3'-10"	2'-7"	4'-4"
#7	5'-3"	3'-6"			
#8	6'-10"	4'-7"			

CONCRETE BREAKDOWN

	STAGE I (CU. YDS.)	STAGE II (CU. YDS.)	STAGE III (CU. YDS.)
NORMAL WT. CONCRETE	245.7	312.6	312.6
FIBER REINFORCED ALL LIGHT WT. CONCRETE	518.4	724.1	724.1

*GROOVING BRIDGE FLOORS

TOTAL	85,495	S.F

* PPC OVERLAY

PPC OVERLAY

SHOTBLASTING BRIDGE DECK	10,250	S.Y.
PPC MATERIALS	284.7	C.Y.
PLACING & FINISHING PPC OVERLAY	10,250	S.Y.

BAR TYPES

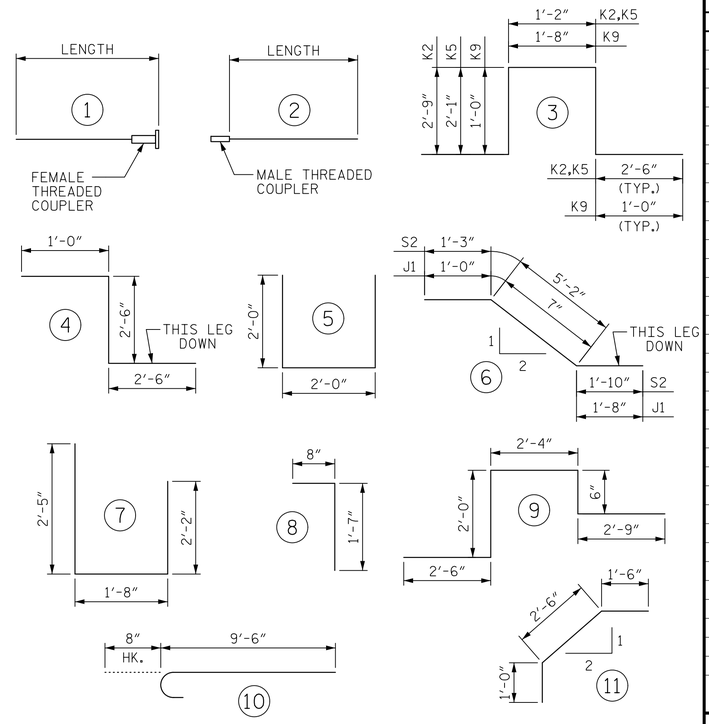

ALL BAR DIMENSIONS ARE OUT TO OUT

BILL OF MATERIAL

STAGE I

BAR	NO.	SIZE	TYPE	LENGTH	WEIGHT
* A1	2079	5	STR	25'-6"	55294
A2	2091	5	STR	25'-6"	55613
* A3	102	5	STR	26'-11"	2864
A4	102	6	STR	28'-6"	4366
* B1	114	4	STR	25'-11"	1974
* B2	64	5	STR	25'-10"	1724
* B3	38	5	STR	27'-10"	1103
* B4	56	4	STR	25'-6"	954
B5	68	4	STR	25'-6"	1158
B6	132	5	STR	50'-9"	6987
* B7	228	4	STR	27'-8"	4214
* B8	152	6	STR	49'-7"	11320
* B9	192	6	STR	45'-0"	12977
* B10	114	4	STR	29'-9"	2266
B11	495	5	STR	58'-8"	30289
* D1	4158	5	1	2'-8"	11565
D2	4182	5	1	2'-4"	10178
* D3	112	4	1	2'-2"	162
D4	136	4	1	1'-11"	174
* J1	48	4	6	3'-3"	104
K1	60	5	STR	7'-4"	459
* K2	16	5	3	11'-8"	195
* K3	16	5	4	6'-0"	100
* S1	96	4	5	6'-0"	385
* S2	48	4	6	8'-3"	265
* S3	96	4	7	6'-3"	401
* S4	96	4	11	5'-0"	321
* S5	96	4	8	2'-3"	144

REINFORCING STEEL = 109,224
* EPOXY COATED REINF. STEEL = 108,332

STAGE II OR STAGE III

BAR	NO.	SIZE	TYPE	LENGTH	WEIGHT
* A3	126	5	STR	26'-11"	3537
A4	126	6	STR	28'-6"	5394
* A5	2079	5	STR	31'-6"	68305
A6	2091	5	STR	31'-6"	68699
* A7	2091	6	10	10'-2"	31930
A8	8	6	STR	11'-4"	136
* B1	138	4	STR	25'-11"	2389
* B2	84	5	STR	25'-10"	2263
* B3	46	5	STR	27'-10"	1335
B6	176	5	STR	50'-9"	9316
* B7	276	4	STR	27'-8"	5101
* B8	184	6	STR	49'-7"	13703
* B9	252	6	STR	45'-0"	17033
* B10	138	4	STR	29'-9"	2742
B11	660	5	STR	58'-8"	40385
* B12	112	4	STR	16'-9"	1253
B13	136	4	STR	16'-8"	1514
* B14	24	5	STR	4'-6"	113
* D5	2079	5	2	2'-8"	5782
D6	2091	5	2	2'-4"	5089
* D7	56	4	2	2'-2"	81
D8	68	4	2	1'-11"	87
* J1	74	4	6	3'-3"	161
K4	60	5	STR	7'-7"	475
* K5	16	5	3	10'-4"	172
* K6	8	5	9	10'-1"	84
K7	16	5	STR	5'-4"	89
K8	20	5	STR	1'-10"	38
* K9	1045	5	3	5'-8"	6176
* S1	108	4	5	6'-0"	433
* S2	54	4	6	8'-3"	298
* S3	88	4	7	6'-3"	367
* S4	88	4	11	5'-0"	294
* S5	88	4	8	2'-3"	132

REINFORCING STEEL = 131,222
* EPOXY COATED REINF. STEEL = 163,684

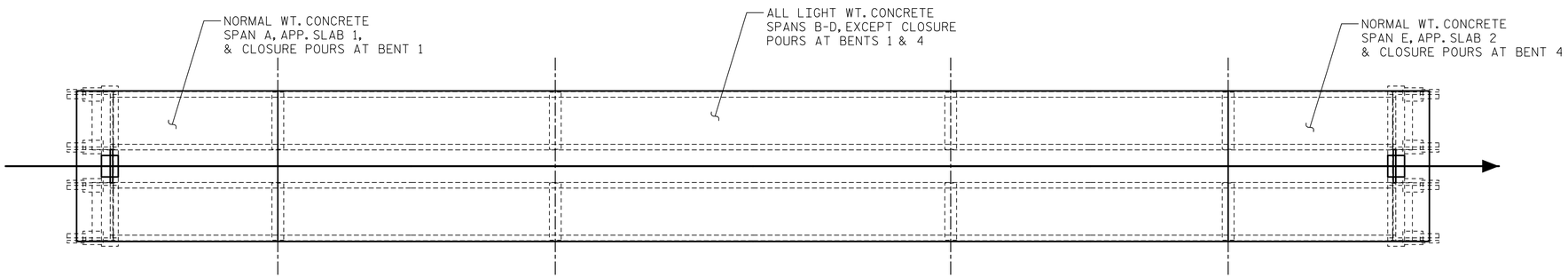

LAYOUT FOR COMPUTING AREA OF REINFORCED CONCRETE DECK SLAB

(LIGHT WT. SQ. FT. = 75,343)
(NORMAL WT. SQ. FT. = 23,357)

ALL LIGHT WEIGHT CONCRETE SHALL INCLUDE 4.0 LBS/CUBIC YARD OF POLYOLEFIN FIBERS. FOR FURTHER DETAILS, SEE SPECIAL PROVISIONS.

PROJECT NO. 15BPR.20
HENDERSON COUNTY
STATION: 35+30.22 -L-

AECOM
AECOM TECHNICAL SERVICES OF NC, INC.
701 CORPORATE CENTER DRIVE, SUITE 475
RALEIGH, NC 27607
(919) 854-6200 www.aecom.com
AECOM License No. F-0342

NORTH CAROLINA PROFESSIONAL ENGINEER SEAL 035062 JOHN E. SLOAN
8/28/2020

STATE OF NORTH CAROLINA
DEPARTMENT OF TRANSPORTATION
RALEIGH

SUPERSTRUCTURE

BILL OF MATERIAL

REVISIONS						SHEET NO.
NO.	BY:	DATE:	NO.	BY:	DATE:	S-111
1			3			TOTAL SHEETS
2			4			129

DOCUMENT NOT CONSIDERED FINAL UNLESS ALL SIGNATURES COMPLETED

DRAWN BY :	M. K. TOM	DATE :	1/2019
CHECKED BY :	G. COLS	DATE :	2/2019
DESIGNED BY :	G. COLS	DATE :	1/2019
DESIGN CHECKED BY :	J.E. SLOAN	DATE :	2/2019

DATE: 2/27/2020
TIME: 4:04:34 PM

USER: Henry.Rosemond
DGN: R:\Structures\04_Drawings\40_207_15BPR.20_SMU_BM04.dgn