DocuSign Envelope ID: 531F5FB4-7EBB-4CC3-8D51-376BE748826E

PROJECT REFERENCE NO.	SHEET NO.
15BPR.20	ITS-29

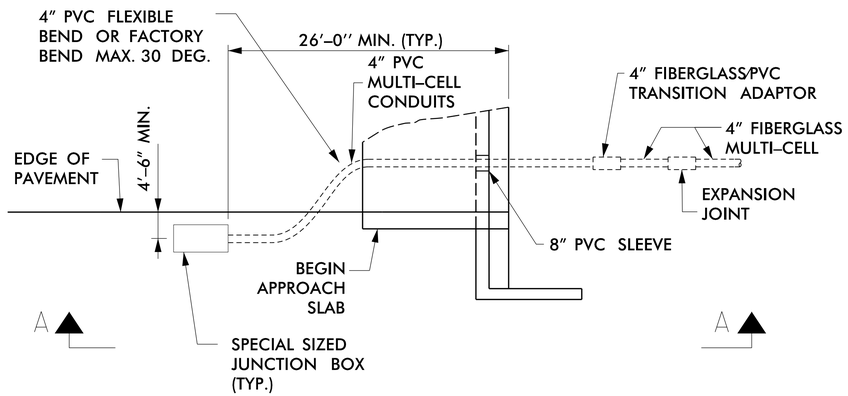

DETAIL "A"

TERMINATION OF CONDUIT THROUGH BACK WALL TO OVERSIZED JUNCTION BOX

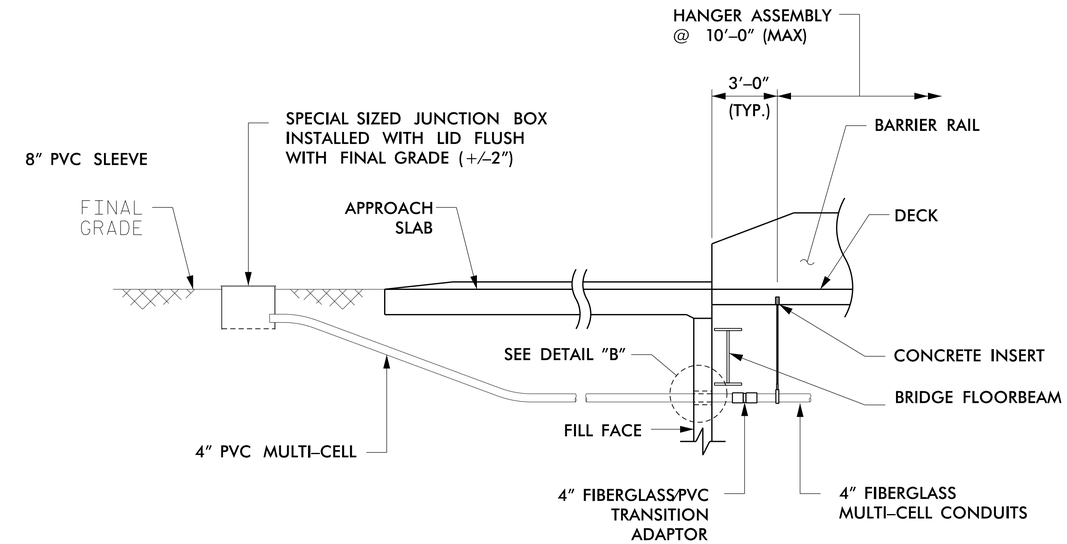

VIEW "A-A"

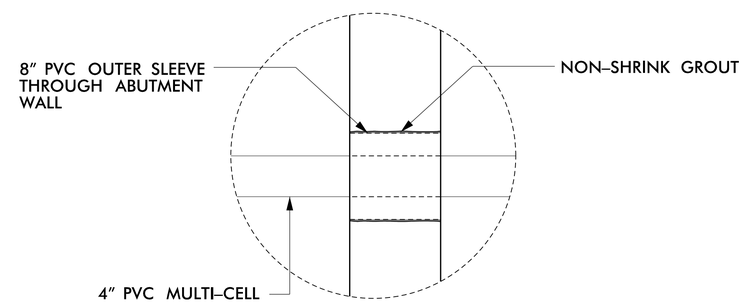

DETAIL "B"

OUTER SLEEVE THROUGH BACK WALL

NOTES

1. BRIDGE HAS EXPANSION JOINTS AT BENTS 1 AND 4
2. CONDUIT CAN ALTERNATLY BE MOUNTED EITHER ABOVE OR BELOW THE FLOORBEAMS, BUT NOT THROUGH THE FLOORBEAMS

AECOM
NC Firm License No.: F-0342
701 Corporate Center Drive
Suite 475 Raleigh, NC 27607
Phone: 919-854-6200

Prepared for the Offices of:
Transportation Mobility and Safety Division
STATE OF NORTH CAROLINA DEPARTMENT OF TRANSPORTATION
Intelligent Transportation Systems Section
750 N. Greenfield Pkwy., Garner, NC 27529

SCALE 0 NA
N.T.S.

Bridge Mounted Conduit

Typical Detail

PLAN DATE:	December 2020	REVIEWED BY:	F. A. Campbell
PREPARED BY:	S. W. Cox	REVIEWED BY:	

REVISIONS	INIT.	DATE

DOCUMENT NOT CONSIDERED FINAL UNLESS ALL SIGNATURES COMPLETED

NORTH CAROLINA PROFESSIONAL SEAL 041673 ENGINEER FRANCE A. CAMPBELL

DocuSigned by:
France Campbell 12/8/2020
C1B9A6A2D9847C...
CADD Filename:

12/7/2021
PW:ecs27:TO-I-26_GreenRiver_TO2*900_CAD_GIS*910_CAD*70_NCDOT_TIP*Traffic*Signals*Design*Signals*ITS*I-26_ITS_PS*530.dgn
michael.covenaugh