DocuSign Envelope ID: 1D51A847-E30B-42E6-ACC9-EF0A4AB3862F

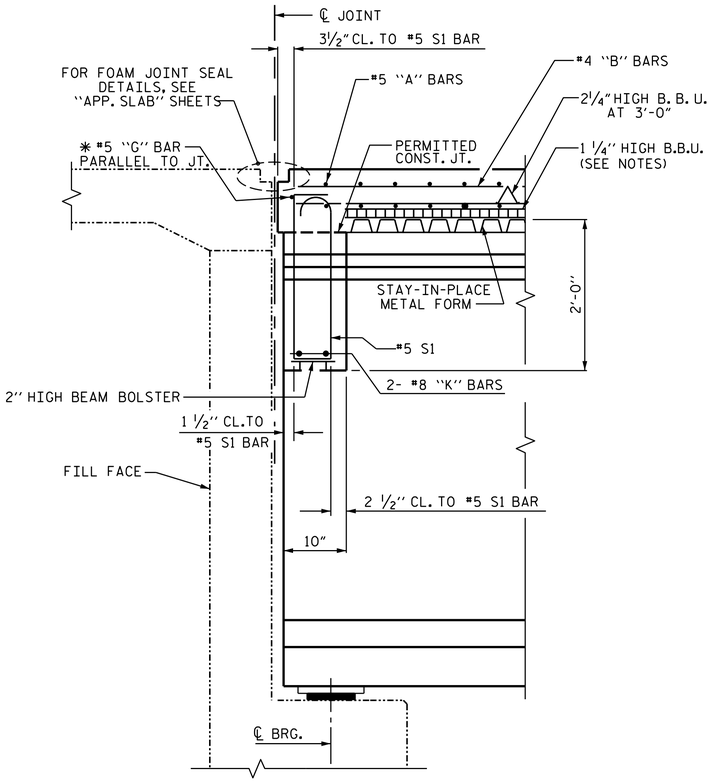

SECTION THRU END BENT

✱ #5 "G" BAR MAY BE SHIFTED SLIGHTLY AS NECESSARY TO CLEAR DIAPHRAGM AND REINFORCING STEEL.

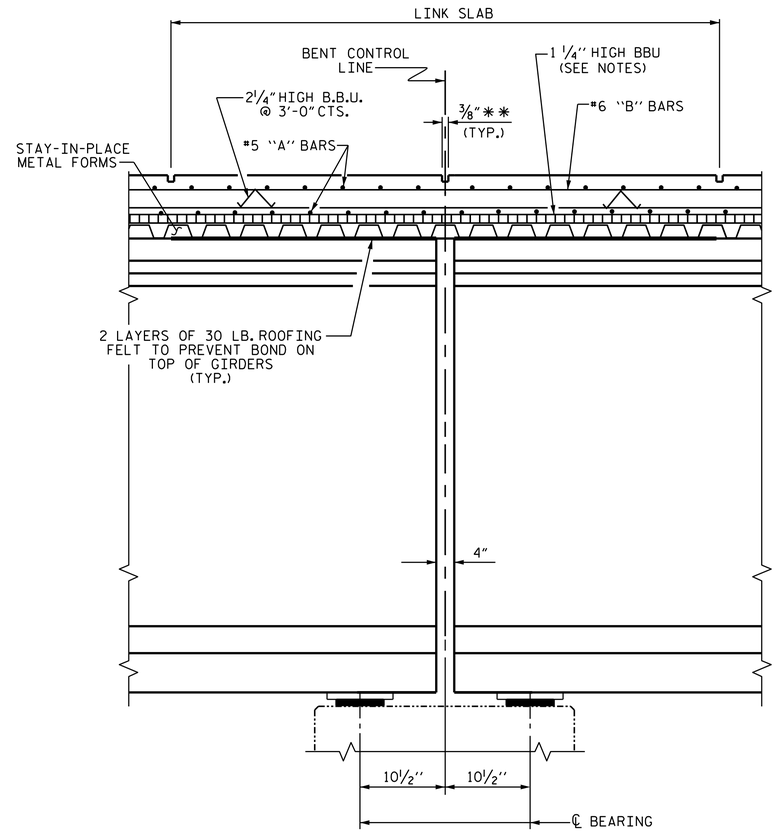

SECTION THRU LINK SLAB

(LOCATED @ BENTS 1, 2, 4, 5, 7 & 8)

✱✱ THE ⅜" WIDE X 1½" DEEP CONTRACTION JOINTS SHALL BE SAWED WITHIN 24 HOURS OF POURING THE DECK. THE JOINTS SHALL BE FILLED WITH JOINT SEALER. THE JOINT SEALER SHALL CONFORM TO THE REQUIREMENTS OF TYPE B LOW MODULUS SILICONE SEALANT. SEE SECTION 1028 OF THE STANDARD SPECIFICATIONS.

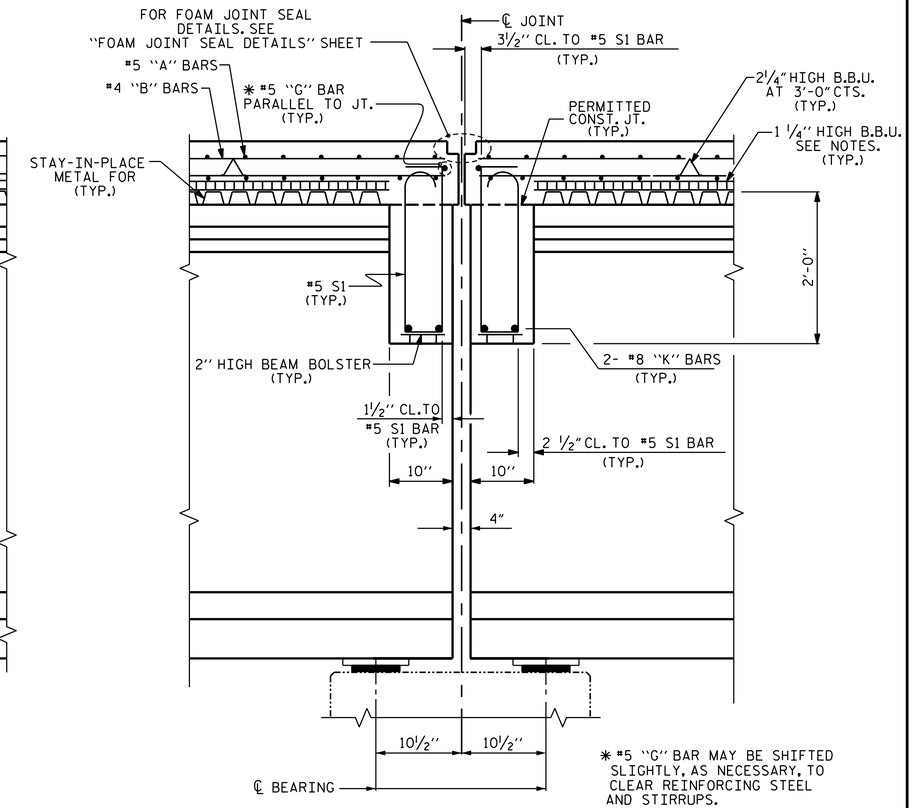

✱ #5 "G" BAR MAY BE SHIFTED SLIGHTLY, AS NECESSARY, TO CLEAR REINFORCING STEEL AND STIRRUPS.

SECTION THRU BENT DIAPHRAGM

(BENTS 3 & 6)

PROJECT NO. B-5825
YADKIN/FORSYTH COUNTY
STATION: 34+65.50 -L-

SHEET 4 OF 4

NORTH CAROLINA PROFESSIONAL SEAL 20125 ENGINEER MARSHALL G. CHEEK, JR.

DocuSigned by: Marshall G. Cheek, Jr.
5FBCC2F3A4DC413...
4/14/2020

DOCUMENT NOT CONSIDERED FINAL UNLESS ALL SIGNATURES COMPLETED

TGS ENGINEERS
706 HILLSBOROUGH STREET
SUITE 200
RALEIGH, NC 27603
PH (919) 773-8887
CORP. LICENSE NO.: C-0275

STATE OF NORTH CAROLINA
DEPARTMENT OF TRANSPORTATION
RALEIGH

SUPERSTRUCTURE

TYPICAL SECTION DETAILS

REVISIONS							SHEET NO.
NO.	BY:	DATE:	NO.	BY:	DATE:		S-12
1			3				TOTAL SHEETS
2			4				60

DRAWN BY : S. B. WILLIAMS DATE : 10-19
CHECKED BY : MGC DATE : 1-20
DESIGN ENGINEER OF RECORD: TBE DATE : 2-20

2/20/2020
X:\NCDOT\B-5825\Structures\Str. #1 - 34+65.50 -L-\Final Plans\DGNs\401_027_B-5825_SMU_TS04_980038.dgn
User:sbwilliams