DocuSign Envelope ID: AB89F0F6-B773-40D5-8637-A50664329E1E

6/2/99

PROJECT REFERENCE NO.	SHEET NO.
R-5740	2A-2

ROADWAY DESIGN ENGINEER
NORTH CAROLINA PROFESSIONAL SEAL 028235 ENGINEER VIRGINIA T. SCHAR
DocuSigned by: Virginia T. Schar
4C43D5ED27824 9F

PAVEMENT DESIGN ENGINEER
NORTH CAROLINA PROFESSIONAL SEAL 022896 ENGINEER CLARK M. MORRISON
DocuSigned by: Clark Morrison
8BA1499B4E984E4...

DOCUMENT NOT CONSIDERED FINAL UNLESS ALL SIGNATURES COMPLETED

PAVEMENT SCHEDULE

C1	PROP. APPROX. 1 1/2" ASPHALT CONCRETE SURFACE COURSE, TYPE S9.5B, AT AN AVERAGE RATE OF 165 LBS. PER SQ. YD.
E2	PROP. APPROX. 5 1/2" ASPHALT CONCRETE BASE COURSE, TYPE B25.0C, AT AN AVERAGE RATE OF 627 LBS. PER SQ. YD.
J1	PROP. 8" AGGREGATE BASE COURSE
T	EARTH MATERIAL
U	EXISTING PAVEMENT
W	VARIABLE DEPTH ASPHALT PAVEMENT (SEE WEDGING DETAILS)

NOTE: PAVEMENT EDGE SLOPES ARE 1:1 UNLESS SHOWN OTHERWISE.

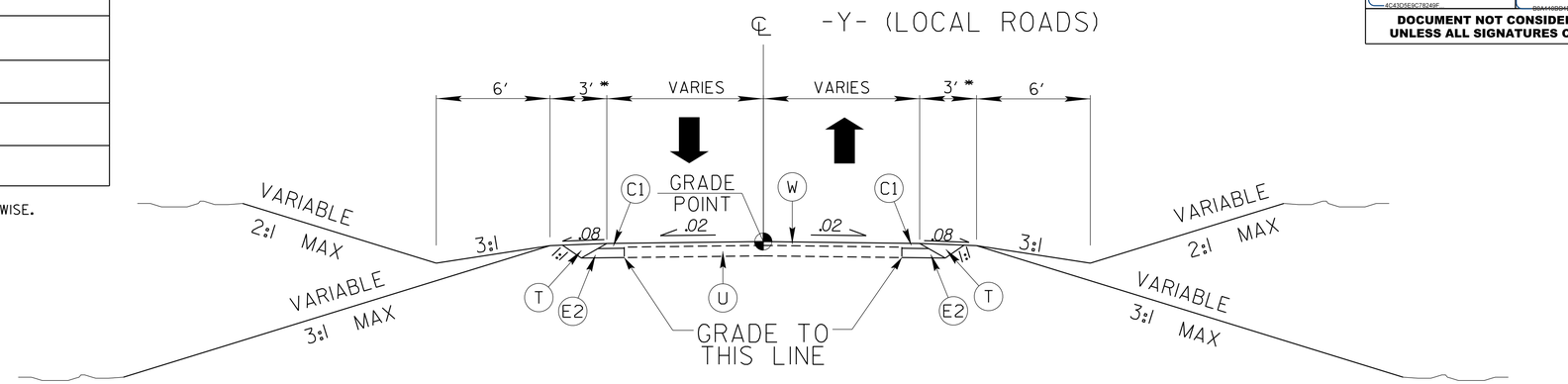

TYPICAL SECTION 4

-Y2- STA. 10+85.78 TO -Y2- STA. 11+00.00
-Y3- STA. 12+60.00 TO -Y3- STA. 13+69.22

*NOTE: WIDEN SHOULDER 3' FOR GUARDRAIL

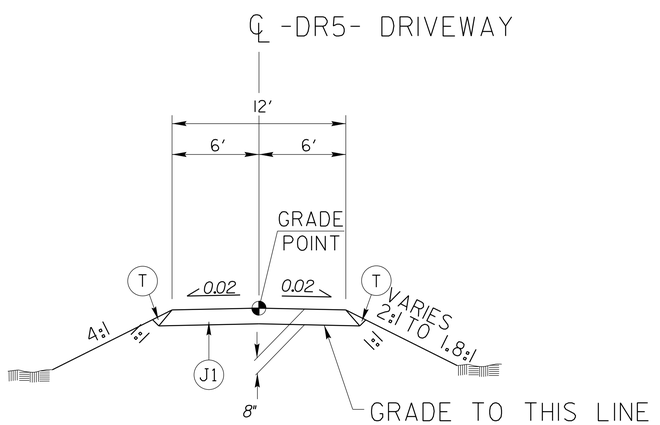

TYPICAL SECTION NO. 6

-DR5- Sta. 10+11.00THRU 10+90.00

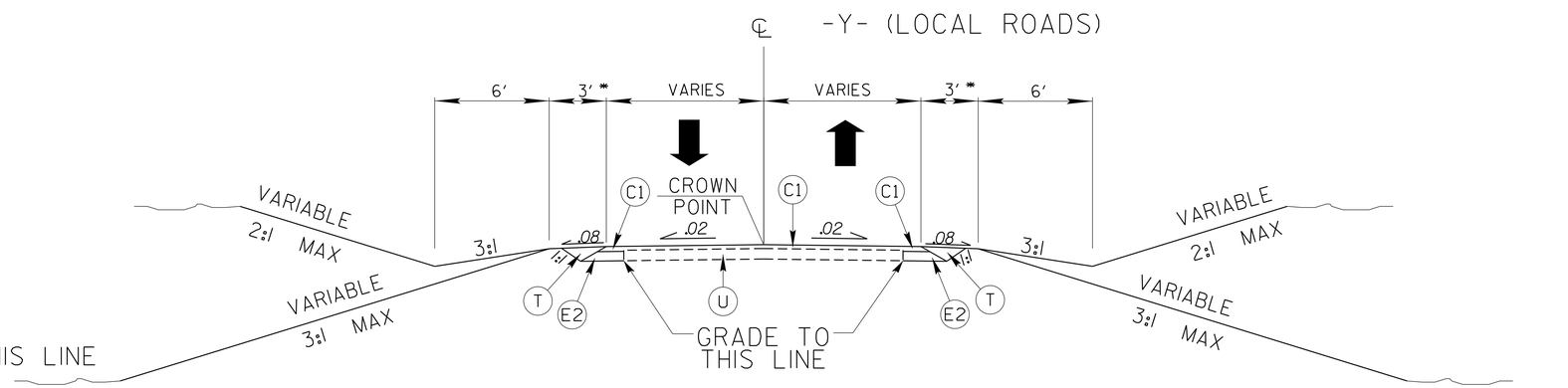

TYPICAL SECTION 5

-Y1- STA. 10+52.07 TO -Y1- STA. 11+87.20
-Y4- STA. 10+00.00 TO -Y4- STA. 10+24.01
-Y5- STA. 10+00.00 TO -Y5- STA. 10+71.04
-Y6- STA. 10+00.00 TO -Y6- STA. 10+90.00
-Y7- STA. 11+62.63 TO -Y7- STA. 12+00.75
-Y8- STA. 10+00.00 TO -Y8- STA. 10+40.37

*NOTE: WIDEN SHOULDER 3' FOR GUARDRAIL

30-JAN-2020 17:25
R:\Roadway\Proj\R5740_rdy_typ.dgn
$$$$USERNAME$$$$