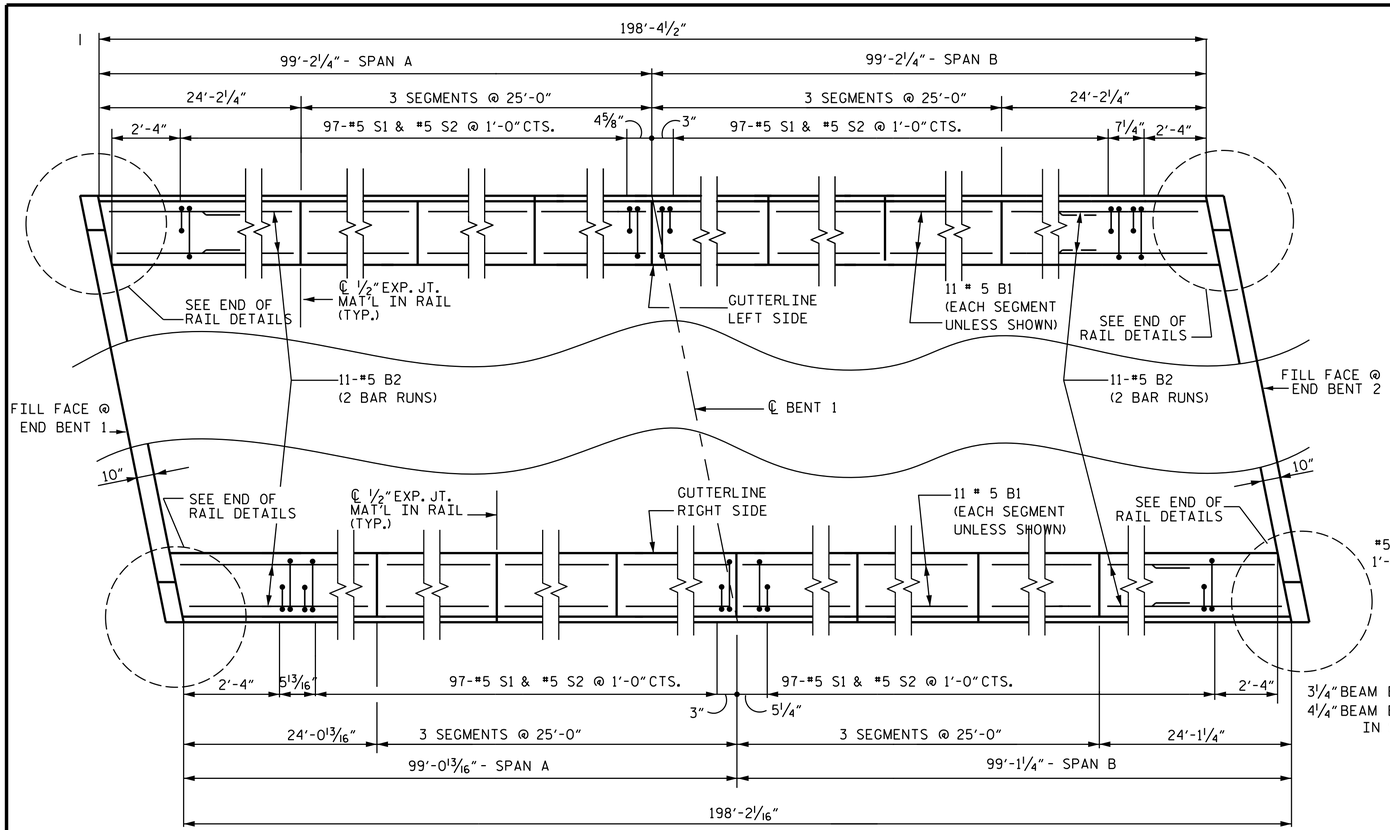

PLAN

NOTE: DIMENSIONS SHOWN ARE ALONG OUTSIDE OF RAIL

NOTES

THE BARRIER RAIL IN EACH SPAN SHALL NOT BE CAST UNTIL ALL SLAB CONCRETE IN THAT SPAN HAS BEEN CAST AND HAS REACHED A MINIMUM COMPRESSIVE STRENGTH OF 3,000 PSI.

ALL REINFORCING STEEL IN BARRIER RAILS SHALL BE EPOXY COATED.

GROOVED CONTRACTION JOINTS, ½" IN DEPTH, SHALL BE TOOLED IN ALL EXPOSED FACES OF THE BARRIER RAIL AND IN ACCORDANCE WITH ARTICLE 825-10(B) OF THE STANDARD SPECIFICATIONS. THE CONTRACTION JOINT SHALL BE LOCATED AT EACH THIRD POINT BETWEEN BARRIER RAIL EXPANSION JOINTS. ONLY ONE CONTRACTION JOINT IS REQUIRED AT MIDPOINT OF BARRIER RAIL SEGMENTS LESS THAN 20 FEET IN LENGTH AND NO CONTRACTION JOINTS ARE REQUIRED FOR THOSE SEGMENTS LESS THAN 10 FEET IN LENGTH.

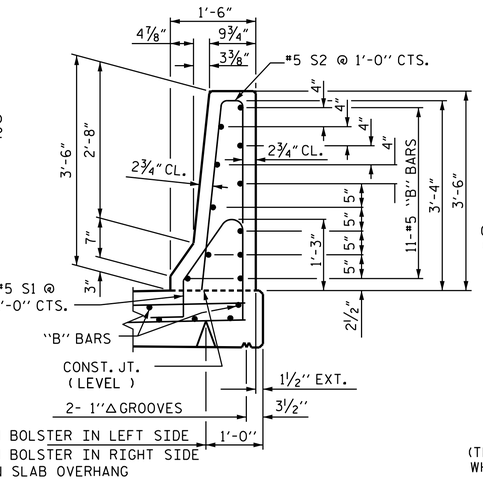

SECTION THRU RAIL

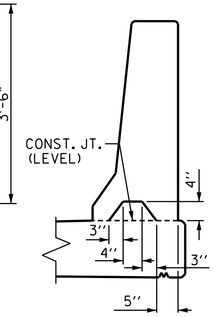

SECTION S-S

AT DAM IN OPEN JOINT (THIS IS TO BE USED ONLY WHEN SLIP FORM IS USED)

BAR TYPES

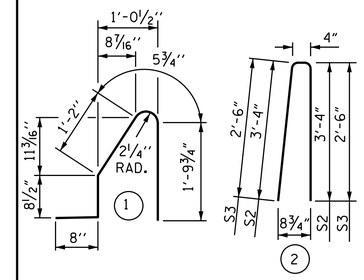

ALL BAR DIMENSIONS ARE OUT TO OUT

BILL OF MATERIAL

FOR CONCRETE BARRIER RAIL ONLY

BAR	NO.	SIZE	TYPE	LENGTH	WEIGHT
* S1	398	#5	1	4'-10"	2006
* S2	390	#5	2	7'-0"	2847
* S3	8	#5	2	5'-4"	45
* B1	132	#5	STR	24'-8"	3396
* B2	88	#5	STR	13'-9"	1262

* EPOXY COATED REINFORCING STEEL	9556 LBS.
CLASS AA CONCRETE	53.9 CU. YDS.
CONCRETE BARRIER RAIL	396.55 LIN. FT.

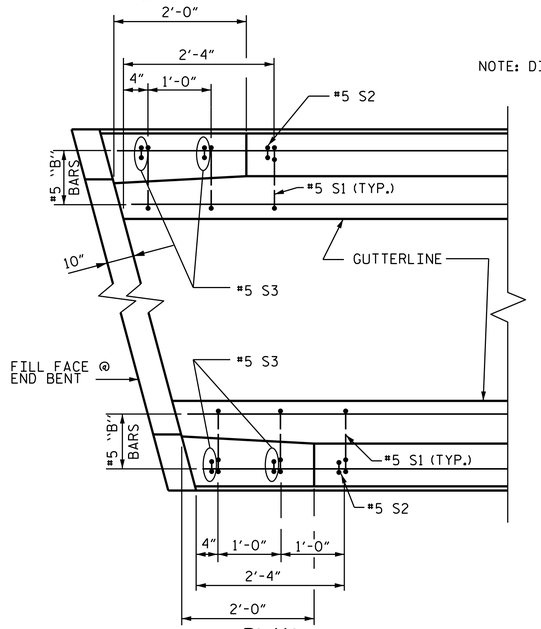

PLAN

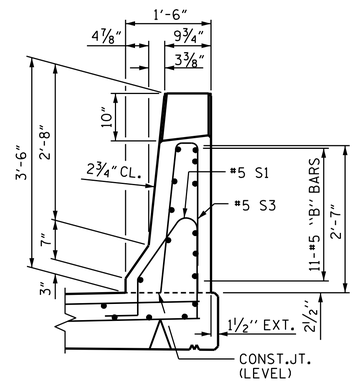

END VIEW

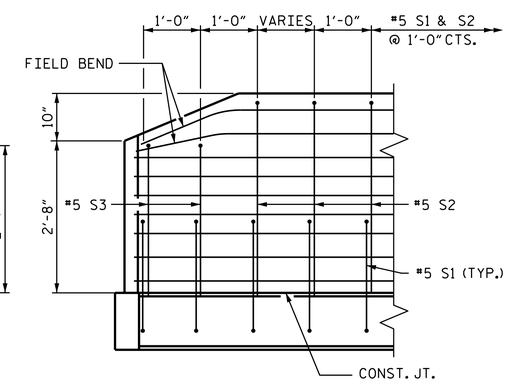

SIDE VIEW

END OF RAIL DETAILS

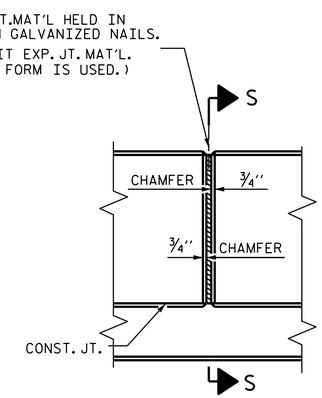

ELEVATION AT EXPANSION JOINTS

BARRIER RAIL DETAILS

PROJECT NO. B-5671

EDGECOMBE COUNTY

STATION: 17+00.00 -L-

STATE OF NORTH CAROLINA
DEPARTMENT OF TRANSPORTATION
RALEIGH

STANDARD

CONCRETE BARRIER RAIL

DocuSigned by: DB3C8E45B06B499...

NORTH CAROLINA PROFESSIONAL SEAL 14114 ENGINEER ROBERT C. LARSON

1/24/2020

DESIGN ENGINEER OF RECORD DATE : 1/24/2020

ASSEMBLED BY : Z. KADI DATE : 6/19/2019
CHECKED BY : R. C. LARSON DATE : 6/19/2019

DRAWN BY : ARB 5/87
CHECKED BY : SJD 9/87

REV. 7/12 MAA/CM
REV. 6/13 MAA/CM
REV. 12/17 MAA/THC

DOCUMENT NOT CONSIDERED FINAL UNLESS ALL SIGNATURES COMPLETED

ENGINEERS ● PLANNERS ● SCIENTISTS ● CONSTRUCTION MANAGERS LICENSE NUMBER: C-0764
KCI Associates of North Carolina, P.A.
4505 Falls of Neuse Road, Suite 400 Raleigh, NC 27609-6270 Phone (919) 783-9241

REVISIONS							SHEET NO.
NO.	BY:	DATE:	NO.	BY:	DATE:		S-15
1			3				TOTAL SHEETS
2			4				29

STD. NO. CBR1 (SHT 1)

KCI JOB NO: 251801945.24