DocuSign Envelope ID: 808CC66F-6F3A-4973-8B77-E7F48B11129E

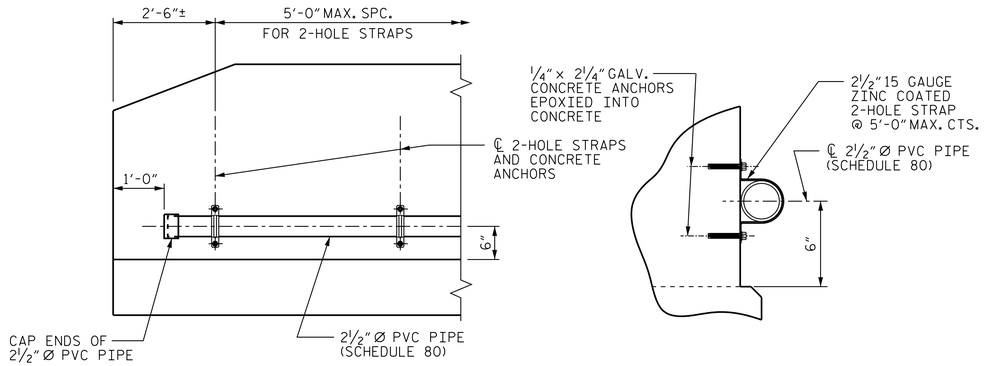

ELEVATION

SECTION

FIBER OPTIC CONDUIT SYSTEM DETAILS

2½" Ø SCHEDULE 80 PVC PIPE ATTACHED TO THE BACK OF BOTH RAILS FOR FUTURE FIBER OPTIC CABLE.

NOTES

THE BARRIER RAIL IN EACH SPAN SHALL NOT BE CAST UNTIL ALL SLAB CONCRETE IN THAT SPAN HAS BEEN CAST AND HAS REACHED A MINIMUM COMPRESSIVE STRENGTH OF 3,000 PSI.

ALL REINFORCING STEEL IN BARRIER RAILS SHALL BE EPOXY COATED.

GROOVED CONTRACTION JOINTS, ½" IN DEPTH, SHALL BE TOOLED IN ALL EXPOSED FACES OF THE BARRIER RAIL AND IN ACCORDANCE WITH ARTICLE 825-10(B) OF THE STANDARD SPECIFICATIONS. THE CONTRACTION JOINT SHALL BE LOCATED AT EACH THIRD POINT BETWEEN BARRIER RAIL EXPANSION JOINTS. ONLY ONE CONTRACTION JOINT IS REQUIRED AT MIDPOINT OF BARRIER RAIL SEGMENTS LESS THAN 20 FEET IN LENGTH AND NO CONTRACTION JOINTS ARE REQUIRED FOR THOSE SEGMENTS LESS THAN 10 FEET IN LENGTH.

BAR TYPES

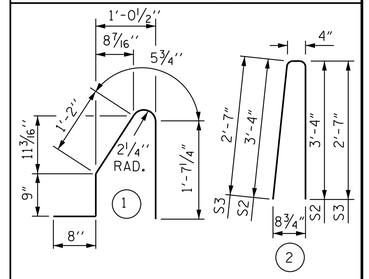

ALL BAR DIMENSIONS ARE OUT TO OUT

BILL OF MATERIAL

FOR CONCRETE BARRIER RAIL ONLY

BAR	NO.	SIZE	TYPE	LENGTH	WEIGHT
* B1	22	#5	STR	23'-9"	545
* B2	44	#5	STR	24'-7"	1,128
* B3	22	#5	STR	28'-9"	660
* S1	208	#5	1	4'-8"	1,012
* S2	200	#5	2	7'-0"	1,460
* S3	8	#5	2	5'-6"	46

* EPOXY COATED REINFORCING STEEL	4,851 LBS.
CLASS AA CONCRETE	28.1 CU. YDS.
CONCRETE BARRIER RAIL	206.67 LIN. FT.
FIBER OPTIC CONDUIT SYSTEM	202.67 LIN. FT.

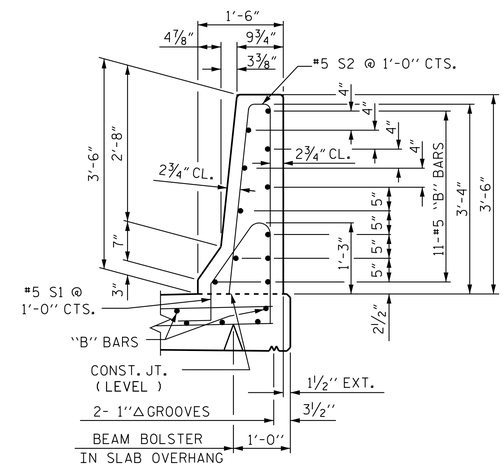

SECTION THRU RAIL

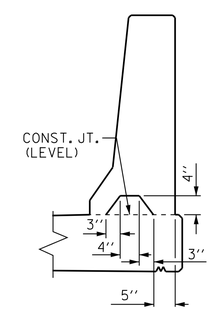

SECTION S-S

AT DAM IN OPEN JOINT (THIS IS TO BE USED ONLY WHEN SLIP FORM IS USED)

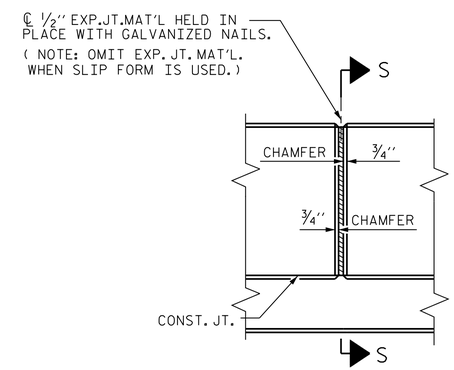

ELEVATION AT EXPANSION JOINTS

BARRIER RAIL DETAILS

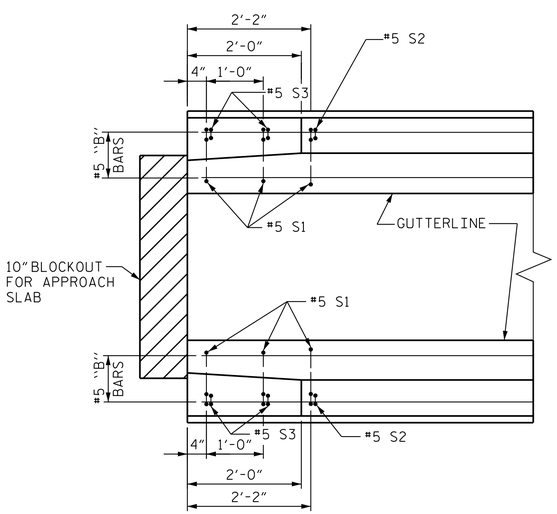

PLAN

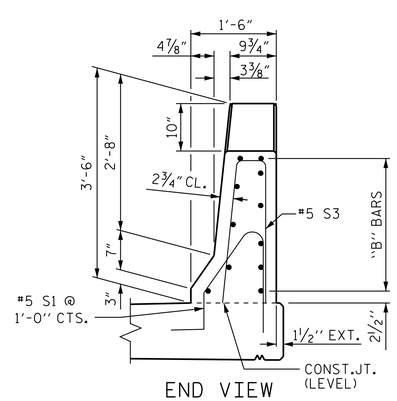

END VIEW

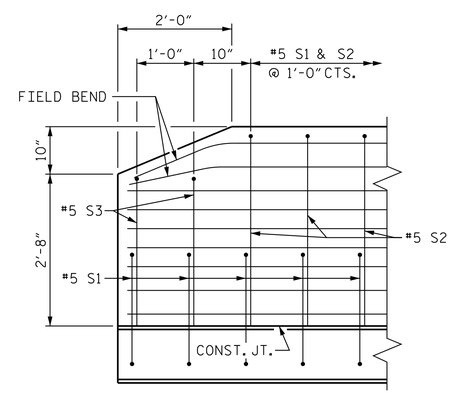

SIDE VIEW

END OF RAIL DETAILS

FOR ADHESIVE ANCHORING AT SAWED JOINTS

PROJECT NO. B-5534

DUPLIN COUNTY

STATION: 21+68.50 -L-

SHEET 2 OF 2

STATE OF NORTH CAROLINA
DEPARTMENT OF TRANSPORTATION
RALEIGH

STANDARD

CONCRETE BARRIER RAIL

NORTH CAROLINA PROFESSIONAL SEAL 045140 ENGINEER PATRICK D. COOKSEY

DocuSigned by: Patrick D. Cooksey BC7A4B969E7B444... 4/2/2020

Kimley»Horn
421 Fayetteville Street, Suite 600
Raleigh, NC 27601-1772
Phone (919) 677-2000
NC LICENSE # F-0102

This document, together with the concepts and designs presented herein, as an instrument of services, is intended only for the specific purpose and client for which it was prepared. Reuse of and improper reliance of this document without written authorization and adaption by Kimley-Horn and Associates, Inc. shall be without liability to Kimley-Horn and Associates, Inc.
Copyright Kimley-Horn and Associates, Inc., 2020

REVISIONS						SHEET NO.
NO.	BY:	DATE:	NO.	BY:	DATE:	S-19
1			3			TOTAL SHEETS
2			4			34

STD. NO. CBR1

DOCUMENT NOT CONSIDERED FINAL UNLESS ALL SIGNATURES COMPLETED

ASSEMBLED BY : D. D. LOWERY	DATE : 02/2020		
CHECKED BY : J. C. WILSON	DATE : 02/2020		
DRAWN BY : ARB 5/87	REV. 7/12	MAA/GM	
CHECKED BY : SJD 9/87	REV. 6/13	MAA/GM	
	REV. 12/17	MAA/THC	

2/20/2020 k:\RDT_Structures_Bridge\NC\01\036500 - B-5534\Cad\Dgn\B5534_SMU_BR2_300082.dgn