DocuSign Envelope ID: 808CC66F-6F3A-4973-8B77-E7F48B11129E

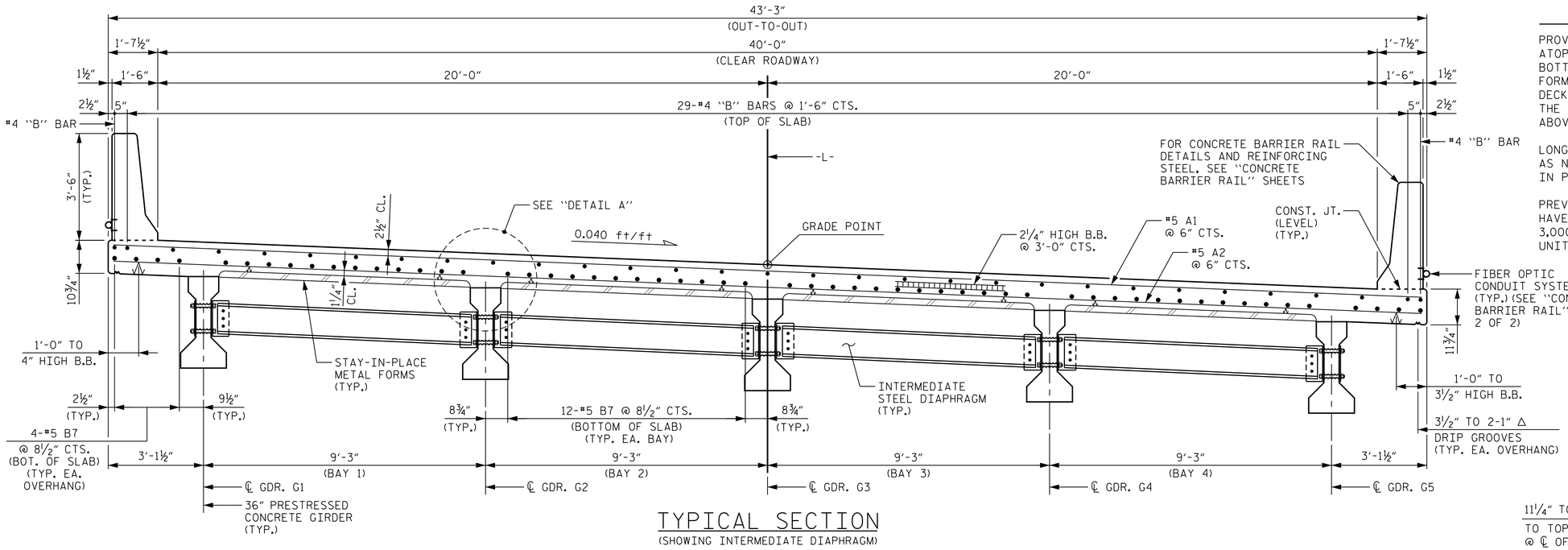

TYPICAL SECTION

(SHOWING INTERMEDIATE DIAPHRAGM)

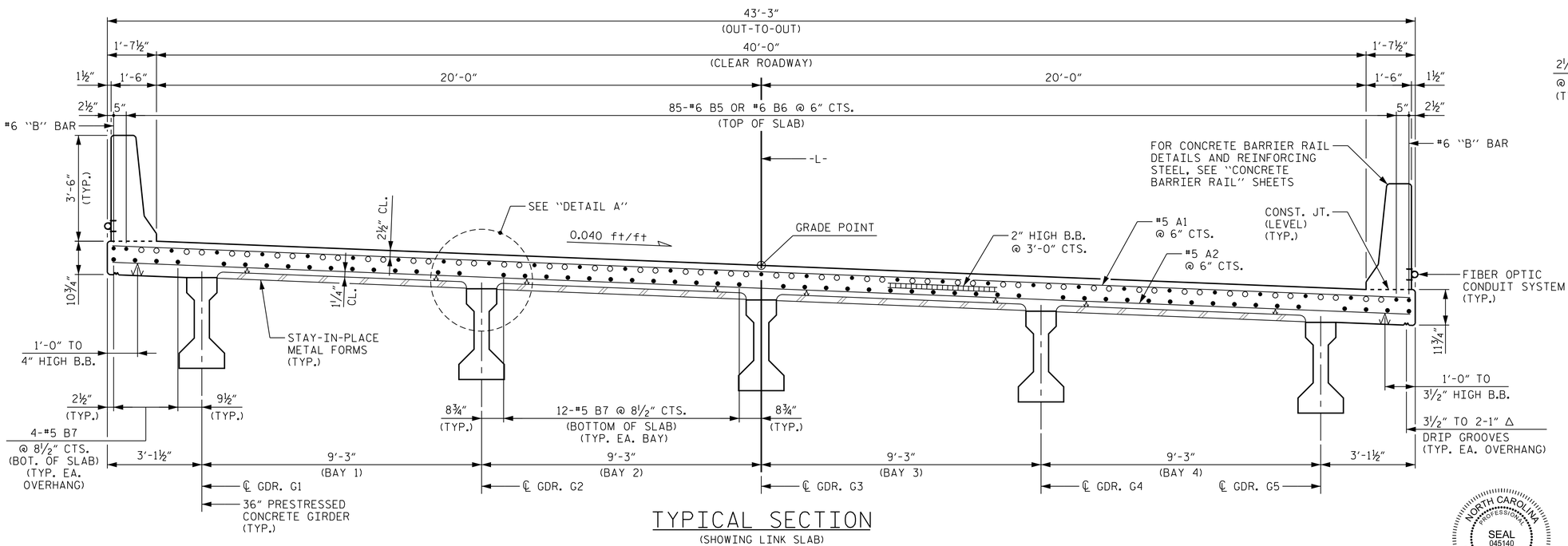

TYPICAL SECTION

(SHOWING LINK SLAB)

○ INDICATES NON-CONTINUOUS REINFORCING STEEL OVER LINK SLAB.

● INDICATES CONTINUOUS REINFORCING STEEL FROM END BENT 1 TO END BENT 2.

NOTES

PROVIDE 1¼" HIGH BEAM BOLSTERS UPPER AT 4'-0" CTS. ATOP THE METAL STAY-IN-PLACE FORMS TO SUPPORT THE BOTTOM MAT OF "A" BARS. WHEN USING REMOVABLE FORMS, PROVIDE CONTINUOUS HIGH CHAIRS FOR METAL DECK (C.H.C.M.) @ 4'-0" CTS. WITH A HEIGHT TO SUPPORT THE BOTTOM MAT OF "A" BARS A CLEAR DISTANCE OF 2½" ABOVE THE TOP OF THE REMOVABLE FORM.

LONGITUDINAL STEEL MAY BE SHIFTED SLIGHTLY, AS NECESSARY, TO AVOID INTERFERENCE WITH STIRRUPS IN PRESTRESSED CONCRETE GIRDERS.

PREVIOUSLY CAST CONCRETE IN A CONTINUOUS UNIT SHALL HAVE ATTAINED A MINIMUM COMPRESSIVE STRENGTH OF 3,000 PSI BEFORE ADDITIONAL CONCRETE IS CAST IN THE UNIT.

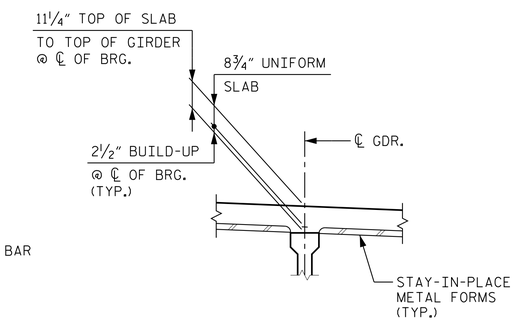

DETAIL "A"

(TYP. EA. GDR. @ EA. BENT)

PROJECT NO. B-5534

DUPLIN COUNTY

STATION: 21+68.50 -L-

SHEET 1 OF 3

STATE OF NORTH CAROLINA
DEPARTMENT OF TRANSPORTATION
RALEIGH

SUPERSTRUCTURE

TYPICAL SECTION

NORTH CAROLINA PROFESSIONAL SEAL 045140 ENGINEER PATRICK D. COOKSEY

DocuSigned by: Patrick D. Cooksey BC7A8B9BE7B444... 4/2/2020

Kimley»Horn
421 Fayetteville Street, Suite 600
Raleigh, NC 27601-1772
Phone (919) 677-2000
NC LICENSE # F-0102

This document, together with the concepts and designs presented herein, as an instrument of services, is intended only for the specific purpose and client for which it was prepared. Reuse of and improper reliance on this document without written authorization and adaptation by Kimley-Horn and Associates, Inc. shall be without liability to Kimley-Horn and Associates, Inc.

Copyright Kimley-Horn and Associates, Inc., 2020

DOCUMENT NOT CONSIDERED FINAL UNLESS ALL SIGNATURES COMPLETED

REVISIONS						SHEET NO.
NO.	BY:	DATE:	NO.	BY:	DATE:	S-5
1			3			TOTAL SHEETS
2			4			34

DRAWN BY: D. D. LOWERY DATE: 02/2020
CHECKED BY: J. C. WILSON DATE: 02/2020
DESIGN ENGINEER OF RECORD: P. D. COOKSEY DATE: 02/2020

2/20/2020 K:\RDT_Structures_Bridge\NC\01036500 - B-5534\Cad\Dgn\B5534_SMU_TS1_300082.dgn