DocuSign Envelope ID: 7B53F41E-E606-4A1D-A58E-896030B9BD4C

PROJECT REFERENCE NO.	SHEET NO.
I-5711	Sig 22.0

PHASING DIAGRAM

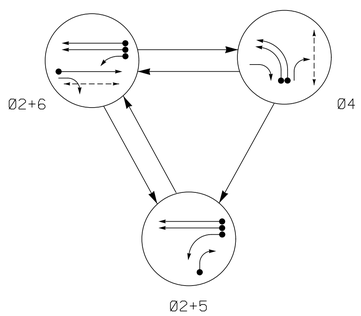

EV PREEMPT PHASES

(Medium Priority)

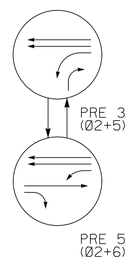

TABLE OF OPERATION

SIGNAL FACE	PHASE Ø2+5	Ø2+6	Ø4	PRE3	PRE5	FLASH
21, 22	G	G	R	G	G	Y
41, 42	~~R~~	~~R~~	←	~~R~~	~~R~~	~~R~~
43	→	R	F Y	→	R	R
51	←	F Y	~~R~~	←	F Y	~~Y~~
61	R	G	R	R	G	Y
62	R	G	R/	R	G	Y
P41,P42	DW	DW	W	DW	DW	DRK
P61,P62	DW	W	DW	DW	DW	DRK

ASC/3 DETECTOR INSTALLATION CHART

DETECTOR					PROGRAMMING							
LOOP	SIZE (FT)	DISTANCE FROM STOPBAR (FT)	TURNS	NEW LOOP	PHASE	CALLING	EXTEND TIME	DELAY TIME	USE ADDED INITIAL	TYPE	SYSTEM LOOP	NEW CARD
2A/S13	6X6	300	5	X	2	Yes	-	-	X	N	X	X
2B/S14	6X6	300	5	X	2	Yes	-	-	X	N	X	X
4A	6X40	0	2-4-2	X	4	Yes	-	3	-	S	-	X
4B	6X40	0	2-4-2	X	4	Yes	-	-	-	S	-	X
5A	6X40	0	2-4-2	X	5	Yes	-	15	-	S	-	X
					2	Yes	-	3	-	G	-	X
5B	6X40	0	2-4-2	X	5	Yes	-	15	-	S	-	X
6A/S11	6X6	300	6	X	6	Yes	-	-	X	N	X	X
S12	6x6	300	6	X	-	No	-	-	-	N	X	X
S15	6x6	+160	5	X	-	No	-	-	-	N	X	X
S16	6x6	+160	5	X	-	No	-	-	-	N	X	X

3 Phase
Fully Actuated w/ Emergency Vehicle Preemption
SR 1007 (Mebane Oaks Rd) CLS
Signal System: 10705

NOTES

1. Refer to "Roadway Standard Drawings NCDOT" dated January 2018 and "Standard Specifications for Roads and Structures" dated January 2018.
2. Do not program signal for late night flashing operation unless otherwise directed by the Engineer.
3. Phase 5 may be lagged.
4. Set all detector units to presence mode.
5. Omit "WALK" and flashing "DON'T WALK" with no pedestrian calls.
6. Program pedestrian heads to countdown the flashing "Don't Walk" time only.
7. This intersection features a GPS Emergency Vehicle Preemption system.
8. Maximum times shown in timing chart are for free-run operation only. Coordinated signal system timing values supersede these values.
9. Closed loop system data:
   Controller Asset #: 2060.

PHASING DIAGRAM DETECTION LEGEND

- DETECTED MOVEMENT
- UNDETECTED MOVEMENT (OVERLAP)
- UNSIGNALIZED MOVEMENT
- PEDESTRIAN MOVEMENT

SIGNAL FACE I.D.

All Heads L.E.D.

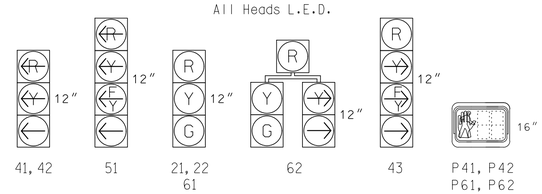

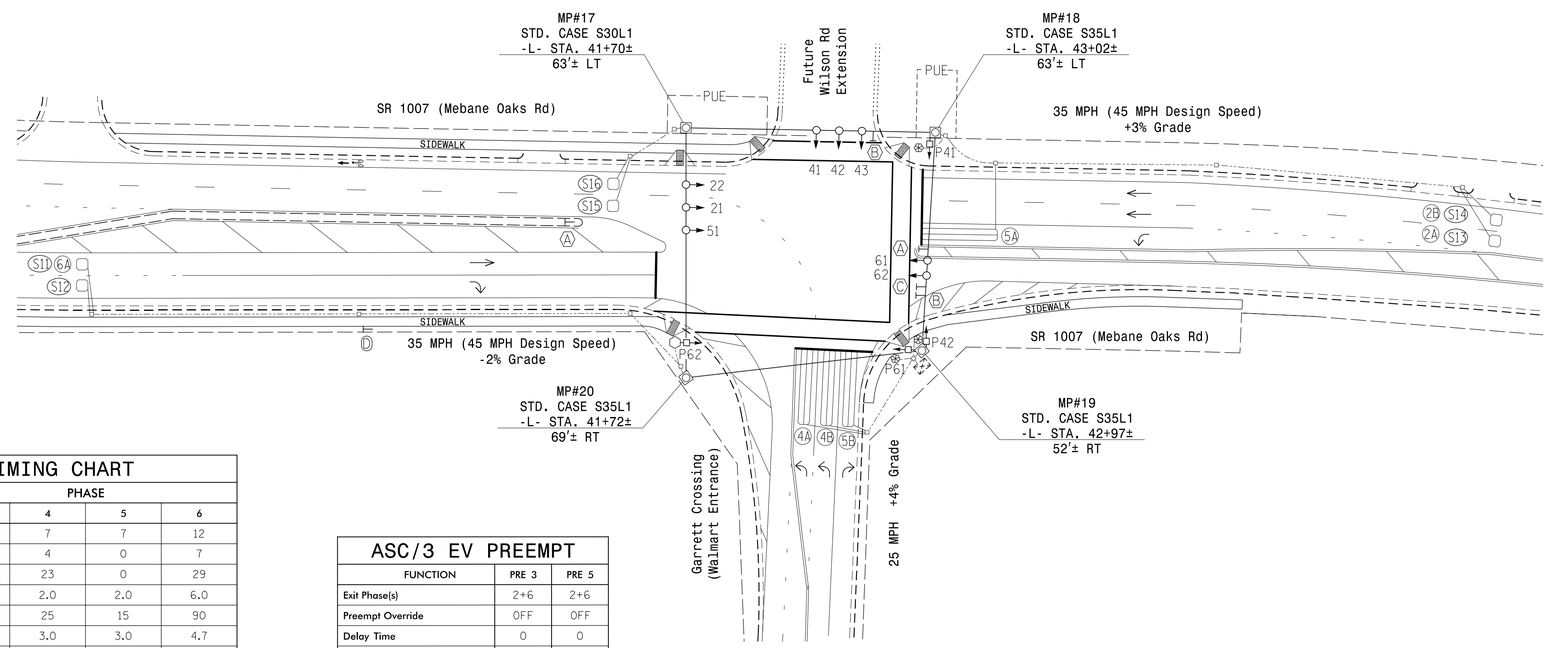

LEGEND

PROPOSED		EXISTING
	Traffic Signal Head	
	Sign	
	Pedestrian Signal Head With Push Button & Sign	
	Inductive Loop Detector	
	Controller & Cabinet	
	Junction Box	
	2-in Underground Conduit	
N/A	Right of Way	
	Directional Arrow	
	Metal Strain Pole	
	Type I Pushbutton Post	
	Type II Signal Pedestal	
N/A	Curb Ramp	
Ⓐ	No U Turn Sign (R3-4)	Ⓐ
Ⓑ	Right "TURNING VEHICLES" Yield "TO" Pedestrians Sign (R10-15R)	Ⓑ
Ⓒ	Right Arrow "ONLY" Sign (R3-5R)	Ⓒ
Ⓓ	"RIGHT LANE MUST TURN RIGHT" Sign (R3-7R)	Ⓓ

ASC/3 TIMING CHART

FEATURE	PHASE 2	4	5	6
Min Green *	12	7	7	12
Walk *	0	4	0	7
Ped Clear	0	23	0	29
Veh. Extension *	6.0	2.0	2.0	6.0
Max 1 *	90	25	15	90
Yellow	4.7	3.0	3.0	4.7
Red Clear	1.9	3.1	2.9	1.9
Red Revert	2.0	2.0	2.0	2.0
Actuations B4 Add *	0	-	-	0
Seconds /Actuation *	1.5	-	-	2.5
Max Initial *	34	-	-	34
Time Before Reduction *	15	-	-	15
Time To Reduce *	30	-	-	30
Minimum Gap	3.0	-	-	3.0
Locking Detector	X	-	-	X
Recall Position	VEH. RECALL	-	-	VEH. RECALL
Dual Entry	-	-	-	-
Simultaneous Gap	X	X	X	X

* These values may be field adjusted. Do not adjust Min Green and Extension times for phases 2 and 6 lower than what is shown. Min Green for all other phases should not be lower than 4 seconds.

ASC/3 EV PREEMPT

FUNCTION	PRE 3	PRE 5
Exit Phase(s)	2+6	2+6
Preempt Override	OFF	OFF
Delay Time	0	0
Ped Clear Through Yellow	Y	Y
Terminate Phases	N	N
Entrance Walk	1	1
Entrance Ped Clear	15	15
Entrance Min Green	1	1
Entrance Yellow Clear	25.5*	25.5*
Entrance Red Clear	25.5*	25.5*
Min Dwell Time	7	7
Preempt Input Extension Time	2	2
Preempt Max Time	120	120
Exit Yellow Clear	25.5*	25.5*
Exit Red Clear	25.5*	25.5*

* Time defaults to time used for phase during normal operation

PREPARED IN THE OFFICE OF:
Accelerate Engineering, PLLC
875 Walnut Street, Suite 316
Cary, NC 27511
Tel: 919.263.5678 Fax: 919.263.5687
NC License No. P-1442

Signal Upgrade - Final Design

DOCUMENT NOT CONSIDERED FINAL UNLESS ALL SIGNATURES COMPLETED

Transportation Mobility and Safety Division
Department of Transportation
Signal Design Section
750 N.Greenfield Pkwy,Garner,NC 27529

SCALE 0 40 1" = 40'

SR 1007 (Mebane Oaks Rd)
at
Garrett Crossing
(Walmart Entrance)

Division 7 Alamance County Mebane

PLAN DATE: November 2019 REVIEWED BY: Z. "Gavin" Teng
PREPARED BY: Z. "Gavin" Teng REVIEWED BY:

REVISIONS	INIT.	DATE

SEAL
NORTH CAROLINA PROFESSIONAL SEAL 032179 ENGINEER ZHAOLONG TENG

DocuSigned by: Zhaolong Teng 12/17/2019
SIGNATURE DATE

SIG. INVENTORY NO. 07-2060

$$$$$SYSTIME$$$$
$$$$$USERNAME$$$$
$$$$$DGN$$$$$$$$$$$$$$$$$$$$