DocuSign Envelope ID: BA9B7A13-732F-4D78-9AD8-7AF4AB90D32C

PROJECT REFERENCE NO.	SHEET NO.
I-5711	Sig 16.1

EDI MODEL 2018ECLip-NC CONFLICT MONITOR PROGRAMMING DETAIL

(remove jumpers and set switches as shown)

REMOVE DIODE JUMPERS I-5, I-6, I-9, I-11, I-15, 2-5, 2-6, 2-9, 2-11, 2-13, 2-15, 3-7, 3-8, 3-10, 3-12, 3-16, 4-7, 4-8, 4-10, 4-12, 4-14, 4-16, 5-9, 5-11, 5-13, 6-9, 6-11, 6-13, 6-15, 7-10, 7-12, 7-14, 8-10, 8-12, 8-14, 8-16, 9-11, 9-13, 9-15, 10-12, 10-14, 10-16, 11-13, 11-15, 12-14, 12-16, 13-15 AND 14-16.

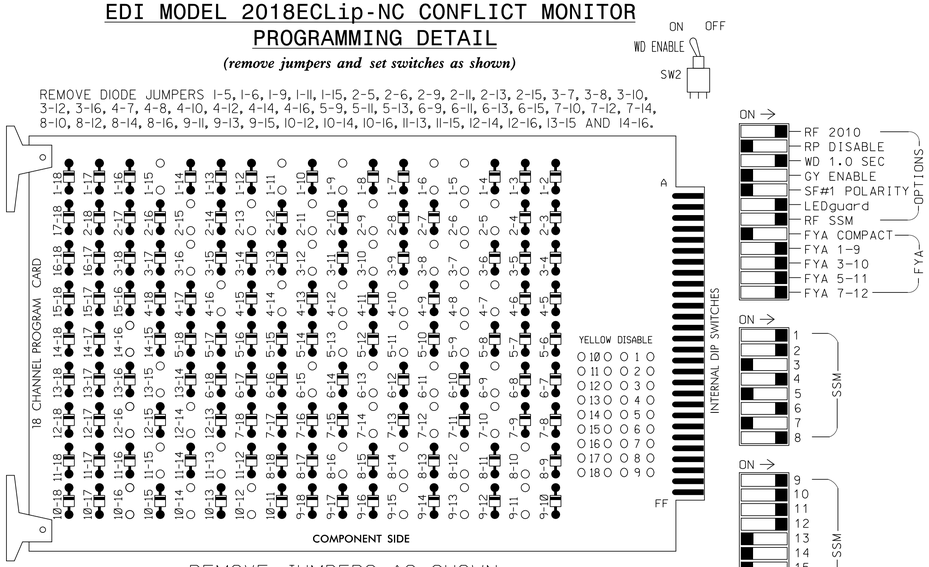

REMOVE JUMPERS AS SHOWN

NOTES:

1. Card is provided with all diode jumpers in place. Removal of any jumper allows its channels to run concurrently.
2. Ensure jumpers SEL2-SEL5 and SEL9 are present on the monitor board.
3. Ensure that Red Enable is active at all times during normal operation.
4. Integrate monitor with Ethernet network in cabinet.

NOTES

1. To prevent "flash-conflict" problems, insert red flash program blocks for all unused vehicle load switches in the output file. The installer shall verify that signal heads flash in accordance with the Signal Plans.
2. Program phases 4 and 8 for Dual Entry.
3. Program controller to start up in phase 2 Walk and phase 6 Walk.
4. The cabinet and controller are part of the SR 1007 (Mebane Oaks Rd) Closed Loop System.

EQUIPMENT INFORMATION

CONTROLLER.....2070
CABINET.....332 W/ AUX
SOFTWARE.....ECONOLITE ASC/3-2070
CABINET MOUNT.....BASE
OUTPUT FILE POSITIONS...18 WITH AUX. OUTPUT FILE
LOAD SWITCHES USED.....S1,S2,S3,S4,S5,S6,S7,S8,S9, S10,S11,S12,AUX S1,AUX S2, AUX S4,AUX S5
PHASES USED.....1,2,2PED,3,4,4PED,5,6,6PED 7,8,8PED
OVERLAP "A".....*
OVERLAP "B".....*
OVERLAP "C".....*
OVERLAP "D".....*

* See overlap programming detail on sheet 2

SIGNAL HEAD HOOK-UP CHART

LOAD SWITCH NO.	S1	S2	S3	S4	S5	S6	S7	S8	S9	S10	S11	S12	AUX S1	AUX S2	AUX S3	AUX S4	AUX S5	AUX S6
CMU CHANNEL NO.	1	2	13	3	4	14	5	6	15	7	8	16	9	10	17	11	12	18
PHASE	1	2	2 PED	3	4	4 PED	5	6	6 PED	7	8	8 PED	OLA	OLB	SPARE	OLC	OLD	SPARE
SIGNAL HEAD NO.	11★	82	21,22	P21, P22	31★	41,42 43	P41, P42	51★	61,62	P61, P62	71★	81,82	P81, P82	11★	31★	NU	51★	71★	NU
RED	*		128			101			134			107						
YELLOW			129		*	102		*	135		*	108						
GREEN			130			103			136			109						
RED ARROW													A121	A124		A114	A101	
YELLOW ARROW		126											A122	A125		A115	A102	
FLASHING YELLOW ARROW													A123	A126		A116	A103	
GREEN ARROW	127	127		118			133			124								
✋			113			104			119			110						
🚶			115			106			121			112						

NU = Not Used
* Denotes install load resistor. See load resistor installation detail this sheet.
★ See pictorial of head wiring in detail this sheet.

FYA SIGNAL WIRING DETAIL

(wire signal heads as shown)

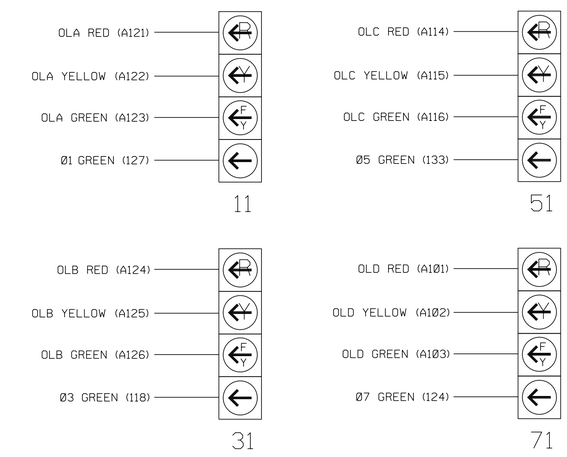

INPUT FILE POSITION LAYOUT

(front view)

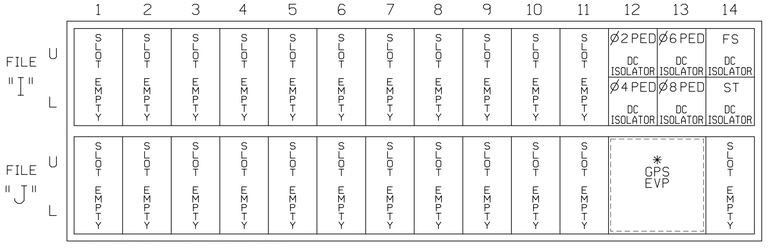

EX.: 1A, 2A, ETC. = LOOP NO.'S
See GPS Preemption Installation Note Below

FS = FLASH SENSE
ST = STOP TIME

SPECIAL DETECTOR NOTE

Install a GPS preemption system. Perform installation according to manufacturer's directions and NCDOT engineer approved mounting location to accomplish the preemption schemes shown on the Signal Design Plans.

INPUT FILE CONNECTION & PROGRAMMING CHART

LOOP NO.	LOOP TERMINAL	INPUT FILE POS.	PIN NO.	DETECTOR NO.	NEMA PHASE	CALL	EXTEND TIME	DELAY TIME	ADDED INITIAL	DETECTOR TYPE
PED PUSH BUTTONS										
P21,P22	TB8-4,6	I12U	67	PED 2	2 PED					
P41,P42	TB8-5,6	I12L	69	PED 4	4 PED					
P61,P62	TB8-7,9	I13U	68	PED 6	6 PED					
P81,P82	TB8-8,9	I13L	70	PED 8	8 PED					

NOTE:
INSTALL DC ISOLATORS IN INPUT FILE SLOTS I12 AND I13.

INPUT FILE POSITION LEGEND: J2L
FILE J
SLOT 2
LOWER

VIDEO DETECTOR NOTE

Install a video detection system for vehicle detection. Perform installation according to manufacturer's directions and NCDOT engineer-approved mounting locations to accomplish the detection schemes shown on the Signal Design Plans.

COUNTDOWN PEDESTRIAN SIGNAL OPERATION

Countdown Ped Signals are required to display timing only during Ped Clearance Interval. Consult Ped Signal Module user's manual for instructions on selecting this feature.

LOAD RESISTOR INSTALLATION DETAIL

(install resistors as shown)

△1 REVISE PHASE 7 LOAD RESISTOR

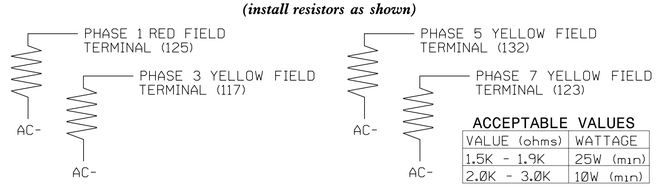

ACCEPTABLE VALUES

VALUE (ohms)	WATTAGE
1.5K - 1.9K	25W (min)
2.0K - 3.0K	10W (min)

THIS ELECTRICAL DETAIL IS FOR
THE SIGNAL DESIGN: Ø7-1349T2
DESIGNED: November 2019
SEALED: 12/17/2019
REVISED: N/A

PREPARED IN THE OFFICE OF:
Accelerate Engineering, PLLC
875 Walnut Street, Suite 316
Cary, NC 27511
Tel: 919.263.5678 Fax: 919.263.5687
NC License No. P-1442

Temporary Design 2
Electrical Detail - Sheet 1 of 3

DOCUMENT NOT CONSIDERED FINAL UNLESS ALL SIGNATURES COMPLETED

ELECTRICAL AND PROGRAMMING DETAILS FOR:

SR 1007 (Mebane Oaks Road)
at
SR 2186 (Brundage Lane) /
SR 2210 (Forest Oaks Lane)

Division 7 Alamance County Mebane

PLAN DATE: November 2019 REVIEWED BY: Z. "Gavin" Teng
PREPARED BY: Z. "Gavin" Teng REVIEWED BY:

REVISIONS | INIT. | DATE

750 N.Greenfield Pkwy,Garner,NC 27529

SEAL
NORTH CAROLINA PROFESSIONAL SEAL 032179 ENGINEER ZHAOLONG TENG

DocuSigned by: Zhaolong Teng 12/17/2019
SIGNATURE DATE

SIG. INVENTORY NO. Ø7-1349T2

$$$$$SYSTIME$$$$
$$$$$$$$$$$$$$$$$$$$
$$$$$$$$$$$$$$$$$$$$
$$$$$$$$$$$$$$$$