This electronic collection of documents is provided for the convenience of the user and is Not a Certified Document –

The documents contained herein were originally issued and sealed by the individuals whose names and license numbers appear on each page, on the dates appearing with their signature on that page.
This file or an individual page shall not be considered a certified document.

DocuSign Envelope ID: D8AC686D-64D9-491D-A12E-37F1D21003DA

5/14/99

REVISIONS

2/12/2019

DETAIL 49
INLET CHANNEL IMPROVEMENTS
(Not to Scale)

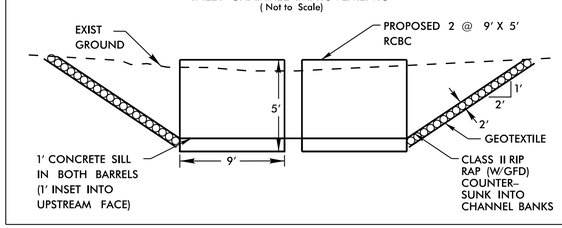

STA. 38+90 –L– (RT)

DETAIL 50
OUTLET CHANNEL IMPROVEMENTS
(Not to Scale)

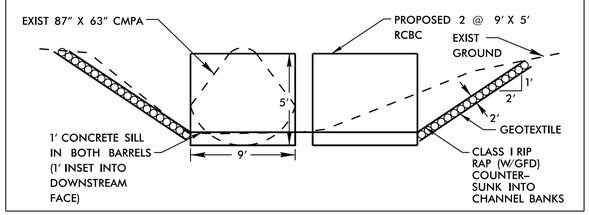

STA. 38+76 –L– (LT)

DETAIL 51
INLET CHANNEL IMPROVEMENTS
(Not to Scale)

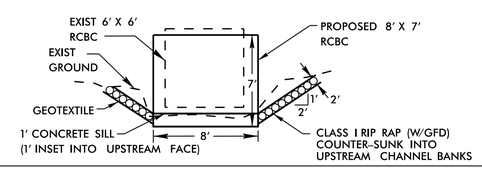

STA. 52+78 –L– (RT)

DETAIL 52
OUTLET CHANNEL IMPROVEMENTS
(Not to Scale)

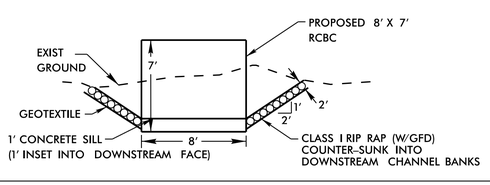

STA. 53+25 –L– (LT)

DETAIL 53
(NOT TO SCALE)
SINGLE BARREL CULVERT
SKEWED LOW FLOW
CHANNEL AND SILLS

*NOTES:

1) CLASS B RIP RAP BETWEEN SILLS/BAFFLES IN THE CULVERT SHALL PROVIDE A CONTINUOUS LOW FLOW CHANNEL. EXISTING CHANNEL CONSISTS OF ROCK THEREFORE EXCAVATED NATIVE MATERIAL IS NOT ANTICIPATED FROM THE STREAM BED AT THE PROJECT SITE DURING CONSTRUCTION.

2) SILLS/BAFFLES ARE TO BE 1.0 FT. WIDE, CAST SEPARATELY AND ATTACHED BY DOWELS.

3) NO LOW FLOW SILLS/BAFFLES WILL BE REQUIRED AT UPSTREAM AND DOWNSTREAM CULVERT FACE AS CULVERT WILL NOT BE BURIED DUE TO PRESENCE OF ROCK IN STREAM BED.

4) SILLS/BAFFLES ARE TO BE 1' HIGH.

5) NUMBER OF SILL/BAFFLES DETERMINED BY THE ENGINEER.

6) CULVERT SHOULD BE BACKFILLED WITH CLASS B RIP RAP TO SILL/BAFFLE HEIGHT.

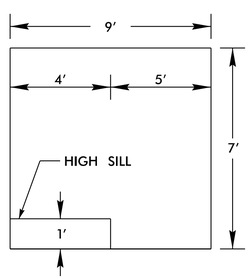

SILLS AT
INLET AND OUTLET

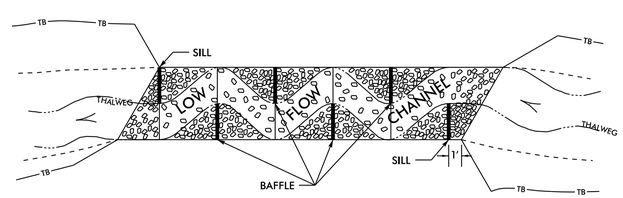

NUMBER OF BAFFLES=8
ON 25 FT CENTERS FROM UPSTREAM SILL

PLAN VIEW

9-13

STA. 305+27 –L–

DETAIL 54
INLET CHANNEL IMPROVEMENTS
(Not to Scale)

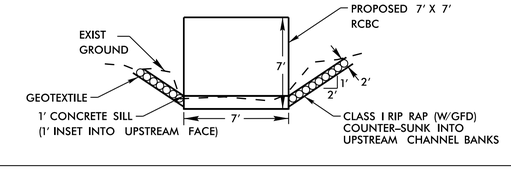

STA. 93+60 –L– (RT)

DETAIL 55
OUTLET CHANNEL IMPROVEMENTS
(Not to Scale)

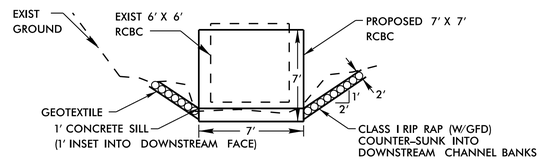

STA. 93+56 –L– (LT)

DETAIL 56
INLET CHANNEL IMPROVEMENTS
(Not to Scale)

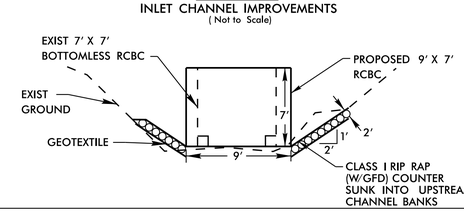

STA. 304+69 –L– (RT)

DETAIL 57
OUTLET CHANNEL IMPROVEMENTS
(Not to Scale)

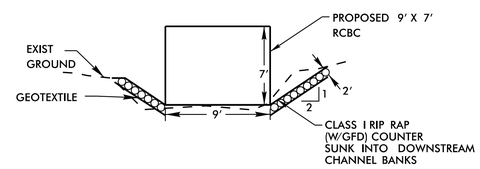

STA. 305+92 –L– (LT)

DETAIL 58
INLET CHANNEL IMPROVEMENTS
(Not to Scale)

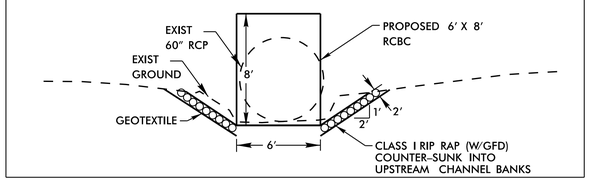

STA. 363+08 –L– (LT)

DETAIL 59
OUTLET CHANNEL IMPROVEMENTS
(Not to Scale)

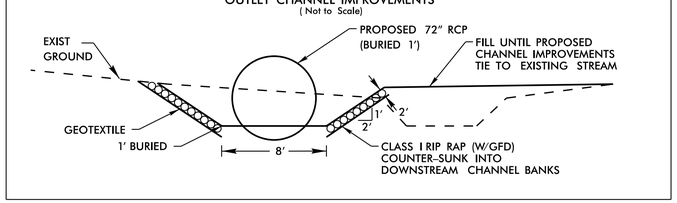

STA. 375+19 –L– (RT)

DETAIL 60
INLET CHANNEL IMPROVEMENTS
(Not to Scale)

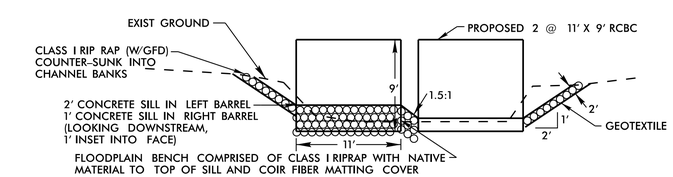

STA. 382+22 –L– (LT)

DETAIL 61
OUTLET CHANNEL IMPROVEMENTS
(Not to Scale)

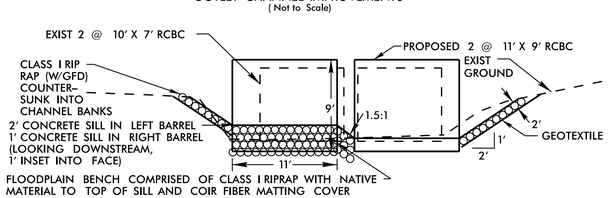

STA. 381+08 –L– (RT)

Kimley»Horn ©2018
P.O. BOX 33068 • RALEIGH, N.C. 27636-3068

RIGHT-OF-WAY REV.
CONST. REV.

PROJECT REFERENCE NO.	SHEET NO.
R-2530B	2D-3

ROADWAY DESIGN ENGINEER
NORTH CAROLINA PROFESSIONAL ENGINEER SEAL 032615 JEFFREY W. MOORE
DocuSigned by: Jeffrey W. Moore
DOCUMENT NOT ACCEPTED UNTIL SEALED
2/12/2019

HYDRAULICS ENGINEER
NORTH CAROLINA PROFESSIONAL ENGINEER SEAL 032615 JASON D. LAWING
DocuSigned by: Jason Lawing
DOCUMENT NOT ACCEPTED UNTIL SEALED
2/12/2019

DOCUMENT NOT CONSIDERED FINAL UNLESS ALL SIGNATURES COMPLETED

DocuSign Envelope ID: E7087660-C10E-43F9-8268-42165BFFEB6C

5/14/99

REVISIONS

2/14/2019

Kimley»Horn ©2018

P.O. BOX 33068 • RALEIGH, N.C. 27636–3068

RIGHT–OF–WAY REV.

CONST. REV.

PROJECT REFERENCE NO.	SHEET NO.
R-2530B	2D-4

ROADWAY DESIGN ENGINEER

NORTH CAROLINA PROFESSIONAL SEAL ENGINEER JEFFREY W. HOOPER

DocuSigned by: Jeffrey W. Hooper

2/14/2019

HYDRAULICS ENGINEER

NORTH CAROLINA PROFESSIONAL SEAL ENGINEER JASON D. LAWING

DocuSigned by: Jason D. Lawing

2/14/2019

DOCUMENT NOT CONSIDERED FINAL UNLESS ALL SIGNATURES COMPLETED

DETAIL 62

STANDARD 'V' DITCH

(Not to Scale)

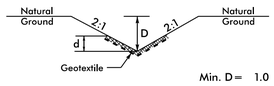

Min. D = 1.0 Ft.
Max. d = 1.0 Ft.

Type of Liner = Class 'B' Rip–Rap

FROM STA. 103 + 13 TO STA. 103 + 31 –L– (RT)
FROM STA. 181 + 00 TO STA. 181 + 26 –L– (LT)
STA. 219 + 30 –L– (RT)

DETAIL 63

DRAINAGE STRUCTURE 0702, CB AND SPLITTER BOX

(NOT TO SCALE)

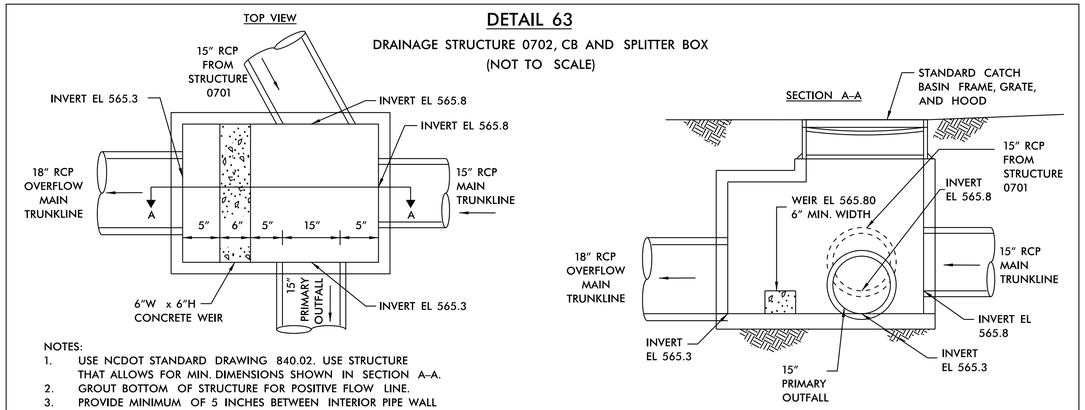

NOTES:

1. USE NCDOT STANDARD DRAWING 840.02. USE STRUCTURE THAT ALLOWS FOR MIN. DIMENSIONS SHOWN IN SECTION A–A.
2. GROUT BOTTOM OF STRUCTURE FOR POSITIVE FLOW LINE.
3. PROVIDE MINIMUM OF 5 INCHES BETWEEN INTERIOR PIPE WALL AND ANY DRAINAGE STRUCTURE WALL FACE.

STA. 59 + 84 –L– (RT)

DETAIL 64

DRAINAGE STRUCTURE 0902, CB AND SPLITTER BOX

(NOT TO SCALE)

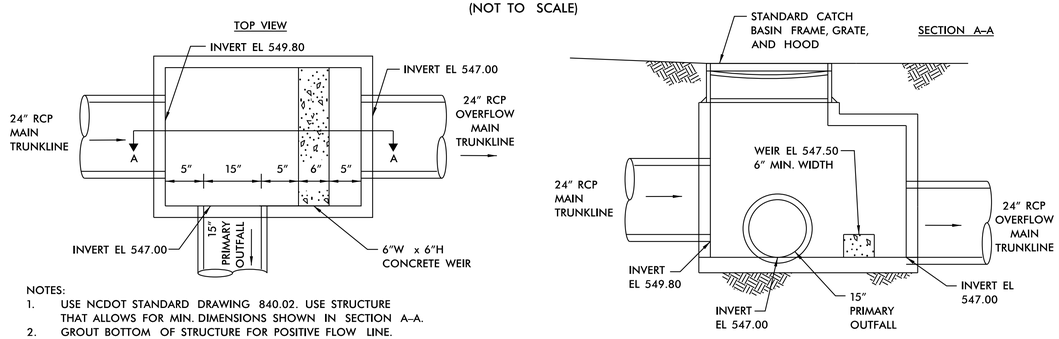

NOTES:

1. USE NCDOT STANDARD DRAWING 840.02. USE STRUCTURE THAT ALLOWS FOR MIN. DIMENSIONS SHOWN IN SECTION A–A.
2. GROUT BOTTOM OF STRUCTURE FOR POSITIVE FLOW LINE.
3. PROVIDE MINIMUM OF 5 INCHES BETWEEN INTERIOR PIPE WALL AND ANY DRAINAGE STRUCTURE WALL FACE.

STA. 88 + 15 –L– (RT)

DETAIL 65

DRAINAGE STRUCTURE 0911, CB AND SPLITTER BOX

(NOT TO SCALE)

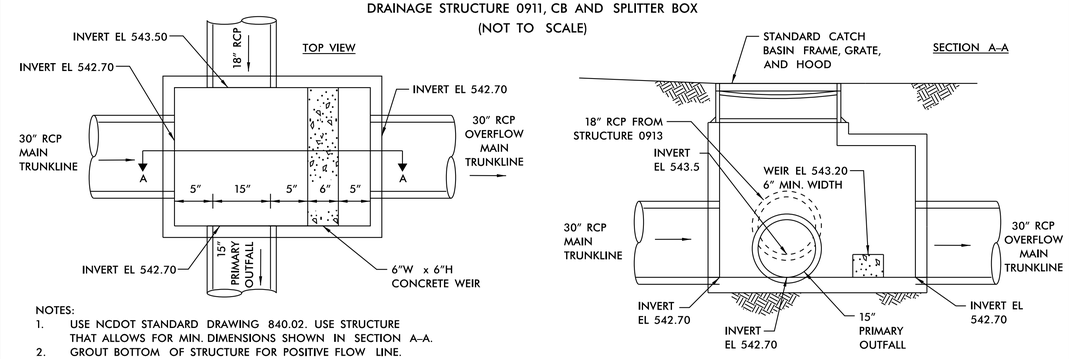

NOTES:

1. USE NCDOT STANDARD DRAWING 840.02. USE STRUCTURE THAT ALLOWS FOR MIN. DIMENSIONS SHOWN IN SECTION A–A.
2. GROUT BOTTOM OF STRUCTURE FOR POSITIVE FLOW LINE.
3. PROVIDE MINIMUM OF 5 INCHES BETWEEN INTERIOR PIPE WALL AND ANY DRAINAGE STRUCTURE WALL FACE.

STA. 91 + 96 –L– (RT)

DETAIL 66

LATERAL 'V' DITCH

(Not to Scale)

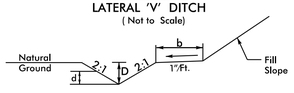

Min. D = 1.5 Ft.
Max. d = 1.5 Ft.
b = 5 Ft.

FROM STA. 23 + 50 TO STA. 24 + 70 –Y2– (RT)
FROM STA. 93 + 60 TO STA. 94 + 00 –L– (RT)

DETAIL 67

SPECIAL LATERAL 'V' DITCH

(Not to Scale)

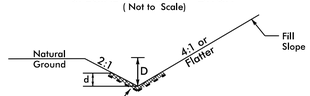

Min. D = 1.5 Ft.
Max. d = 1.5 Ft.

Type of Liner = Class 'B' Rip–Rap

FROM STA. 102 + 00 TO STA. 102 + 72 –L– (LT)
FROM STA. 125 + 50 TO STA. 126 + 50 –L– (LT)
FROM STA. 23 + 80 TO STA. 25 + 00 –Y8– (RT)
FROM STA. 10 + 80 TO STA. 13 + 04 –Y10– (RT)
FROM STA. 223 + 17 TO STA. 225 + 00 –L– (LT)
FROM STA. 236 + 91 TO STA. 237 + 85 –L– (LT)
FROM STA. 16 + 50 TO STA. 16 + 75 –Y11– (RT)
FROM STA. 259 + 54 TO STA. 262 + 50 –L– (RT)
FROM STA. 355 + 50 TO STA. 356 + 75 –L– (LT)
FROM STA. 361 + 00 TO STA. 362 + 00 –L– (LT)
FROM STA. 371 + 75 TO STA. 373 + 00 –L– (LT)
FROM STA. 373 + 70 TO STA. 375 + 00 –L– (LT)
FROM STA. 375 + 20 TO STA. 377 + 90 –L– (RT)

DETAIL 68

STANDARD BASE DITCH

(Not to Scale)

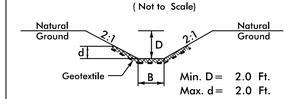

Min. D = 2.0 Ft.
Max. d = 2.0 Ft.
B = 2.0 Ft.

Type of Liner = Class I Rip–Rap

FROM STA. 335 + 30 TO STA. 335 + 84 –L– (LT)

BY OTHERS

DETAIL 69

RIP RAP EMBANKMENT PROTECTION

(Not to Scale)

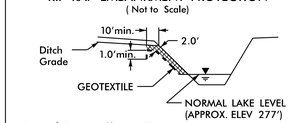

Type of Liner = Class II Rip–Rap

STA. 335 + 84 –L– (LT)

BY OTHERS

DETAIL 70

STANDARD BASE DITCH

(Not to Scale)

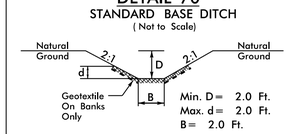

Min. D = 2.0 Ft.
Max. d = 2.0 Ft.
B = 2.0 Ft.

Type of Liner = Class I Rip–Rap

FROM STA. 292 + 12 TO STA. 292 + 50 –L– (LT)

DocuSign Envelope ID: D8AC686D-64D9-491D-A12E-37F1D21003DA

5/14/99

REVISIONS

2/12/2019

Kimley»Horn ©2018
P.O. BOX 33068 • RALEIGH, N.C. 27636-3068

RIGHT-OF-WAY REV.

CONST. REV.

PROJECT REFERENCE NO.	SHEET NO.
R-2530B	2D-5

ROADWAY DESIGN ENGINEER
NORTH CAROLINA PROFESSIONAL ENGINEER SEAL 027836 JEFFREY W. MOORE
Jeffrey W. Moore
2/12/2019

HYDRAULICS ENGINEER
NORTH CAROLINA PROFESSIONAL ENGINEER SEAL 036193 JASON D. LAWRENCE
Jason D. Lawrence
2/12/2019

DOCUMENT NOT CONSIDERED FINAL UNLESS ALL SIGNATURES COMPLETED

DETAIL 71

DRAINAGE STRUCTURE 2202, 2GI-A AND SPLITTER BOX
(NOT TO SCALE)

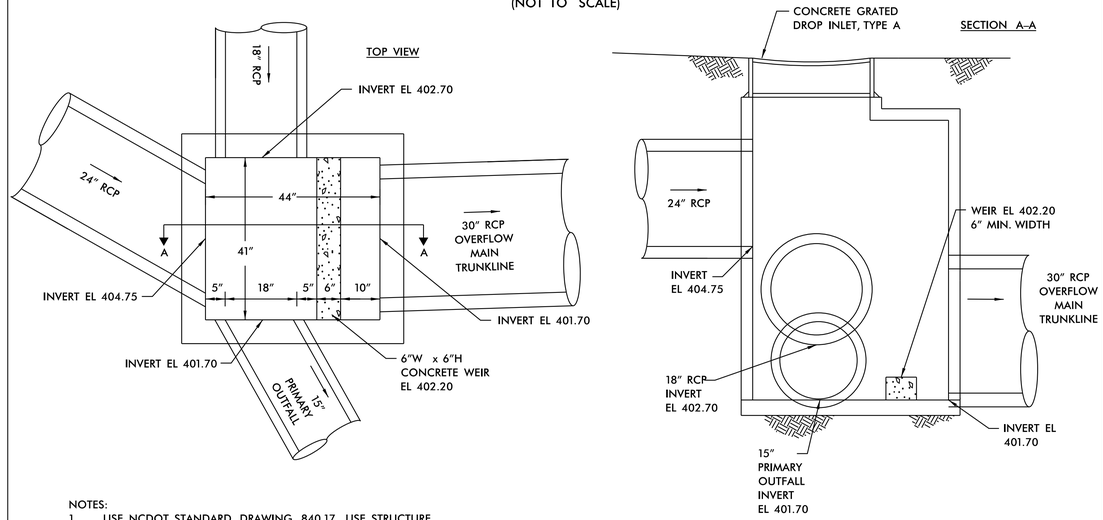

NOTES:
1. USE NCDOT STANDARD DRAWING 840.17. USE STRUCTURE THAT ALLOWS FOR MIN. DIMENSIONS SHOWN IN SECTION A-A.
2. GROUT BOTTOM OF STRUCTURE FOR POSITIVE FLOW LINE.
3. PROVIDE MINIMUM OF 5 INCHES BETWEEN INTERIOR PIPE WALL AND ANY DRAINAGE STRUCTURE WALL FACE.

STA. 276+00 -L- (RT)

DETAIL 72

DRAINAGE STRUCTURE 2403, OVERSIZED TB2GI AND SPLITTER BOX
(NOT TO SCALE)

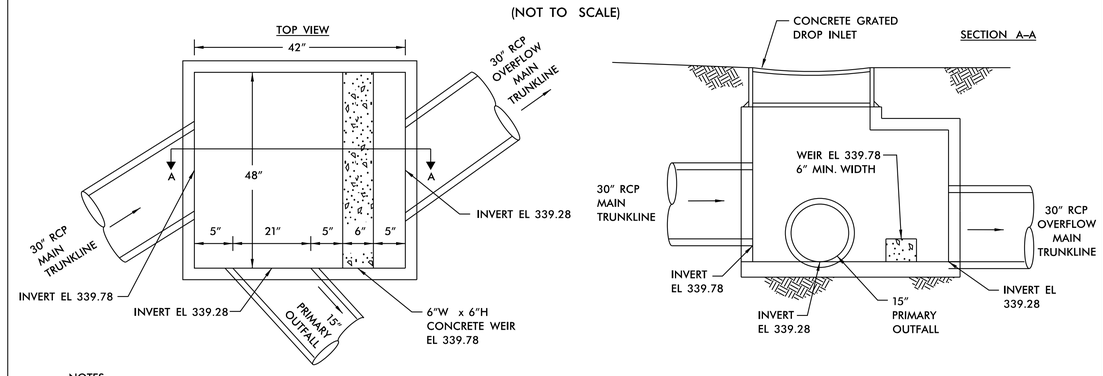

NOTES:
1. USE NCDOT STANDARD DRAWING 840.17. USE STRUCTURE THAT ALLOWS FOR MIN. DIMENSIONS SHOWN IN SECTION A-A.
2. GROUT BOTTOM OF STRUCTURE FOR POSITIVE FLOW LINE.
3. PROVIDE MINIMUM OF 5 INCHES BETWEEN INTERIOR PIPE WALL AND ANY DRAINAGE STRUCTURE WALL FACE.

STA. 295+95 -L-

DETAIL 73

INLET CHANNEL IMPROVEMENTS
(Not to Scale)

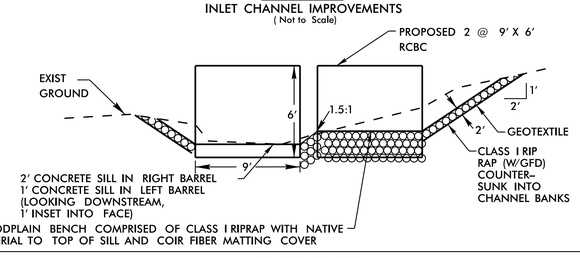

24+87 -Y2- (RT)

DETAIL 74

OUTLET CHANNEL IMPROVEMENTS
(Not to Scale)

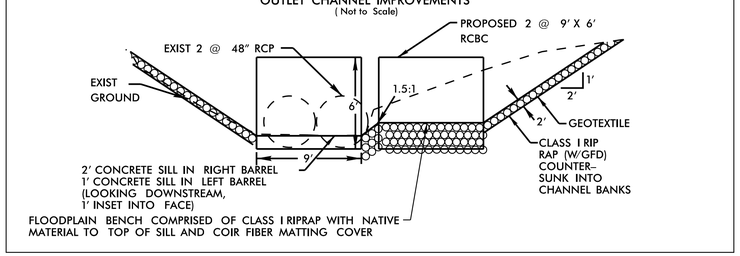

25+02 -Y2- (LT)

DETAIL 75

STANDARD BASE DITCH
(Not to Scale)

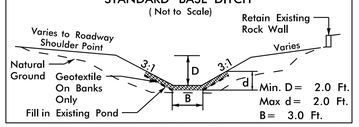

FROM STA. 113+50 TO STA. 115+13 -L- (RT)

DETAIL 76

SPECIAL LATERAL BASE DITCH
(Not to Scale)

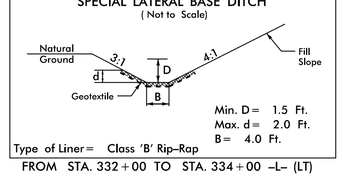

FROM STA. 332+00 TO STA. 334+00 -L- (LT)

BY OTHERS

DETAIL 77

SLOPING ABUTMENT
EMBANKMENT PROTECTION
(Not to Scale)

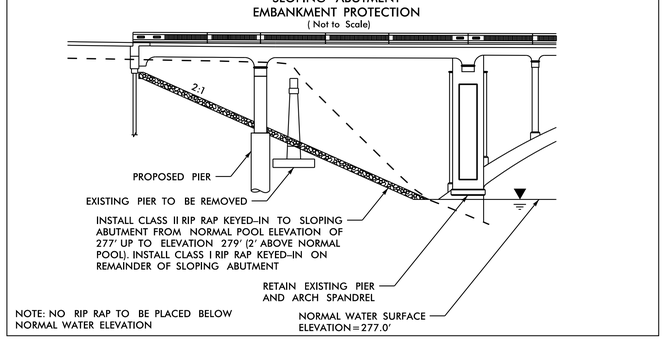

FROM STA. 335+48 TO STA. 336+42 -L-

BY OTHERS

DETAIL 78

SLOPING ABUTMENT
EMBANKMENT PROTECTION
(Not to Scale)

NOTE: NO RIP RAP TO BE PLACED BELOW NORMAL WATER ELEVATION

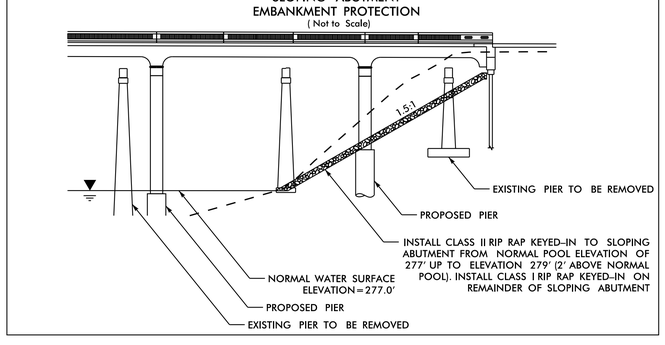

FROM STA. 345+86 TO STA. 346+92 -L-

DocuSign Envelope ID: 79EF6746-EC1C-4306-89C4-E7BC688CBB20

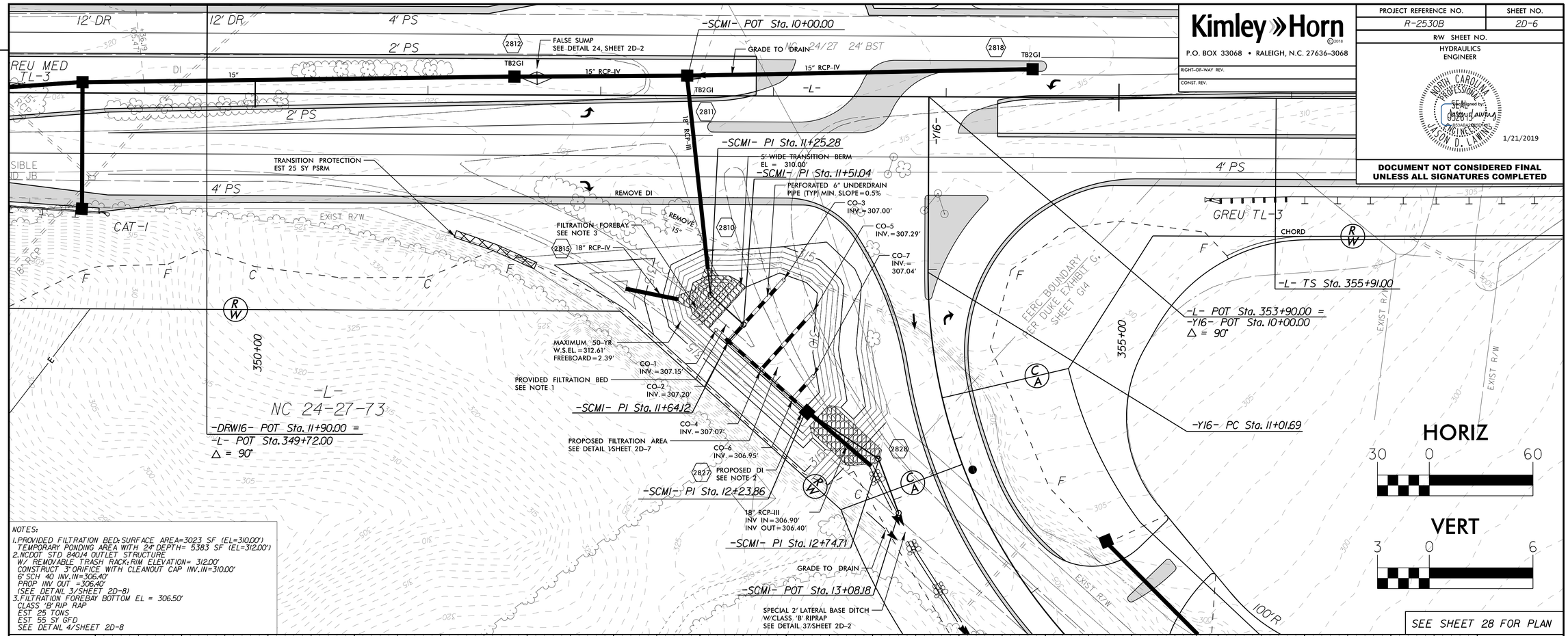

NOTES:

1. PROVIDED FILTRATION BED: SURFACE AREA=3023 SF (EL=310.00')
   TEMPORARY PONDING AREA WITH 24" DEPTH= 5383 SF (EL=312.00')
2. NCDOT STD 840.14 OUTLET STRUCTURE
   W/ REMOVABLE TRASH RACK; RIM ELEVATION= 312.00'
   CONSTRUCT 3" ORIFICE WITH CLEANOUT CAP INV.IN=310.00'
   6" SCH 40 INV.IN=306.40'
   PROP INV OUT =306.40'
   (SEE DETAIL 3/SHEET 2D-8)
3. FILTRATION FOREBAY BOTTOM EL = 306.50'
   CLASS 'B' RIP RAP
   EST 25 TONS
   EST 55 SY GFD
   SEE DETAIL 4/SHEET 2D-8

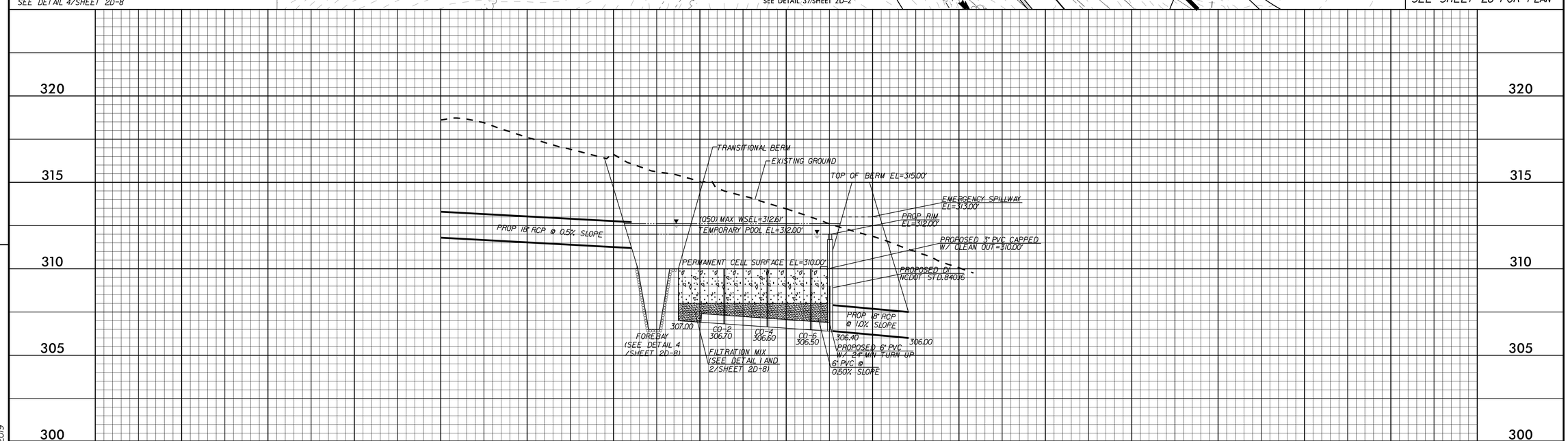

Kimley»Horn ©2018

P.O. BOX 33068 • RALEIGH, N.C. 27636-3068

RIGHT-OF-WAY REV.

CONST. REV.

PROJECT REFERENCE NO.	SHEET NO.
R-2530B	2D-6
R/W SHEET NO.	

HYDRAULICS ENGINEER

NORTH CAROLINA PROFESSIONAL SEAL 032013 ENGINEER JASON D. LEWIS

DocuSigned by: Jason Lewis 1/21/2019

1/21/2019

DOCUMENT NOT CONSIDERED FINAL UNLESS ALL SIGNATURES COMPLETED

REVISIONS

1/21/2019

DocuSign Envelope ID: 42757270-3F64-4CD2-80B4-FA6D5CD3BE3A

Kimley»Horn ©2018
P.O. BOX 33068 • RALEIGH, N.C. 27636-3068
HYDRAULICS ENGINEER
NORTH CAROLINA PROFESSIONAL SEAL 032815 ENGINEER JASON D. LAWING
1/21/2019

RIGHT-OF-WAY REV.
CONST. REV.

DOCUMENT NOT CONSIDERED FINAL UNLESS ALL SIGNATURES COMPLETED

REVISIONS

5/14/99

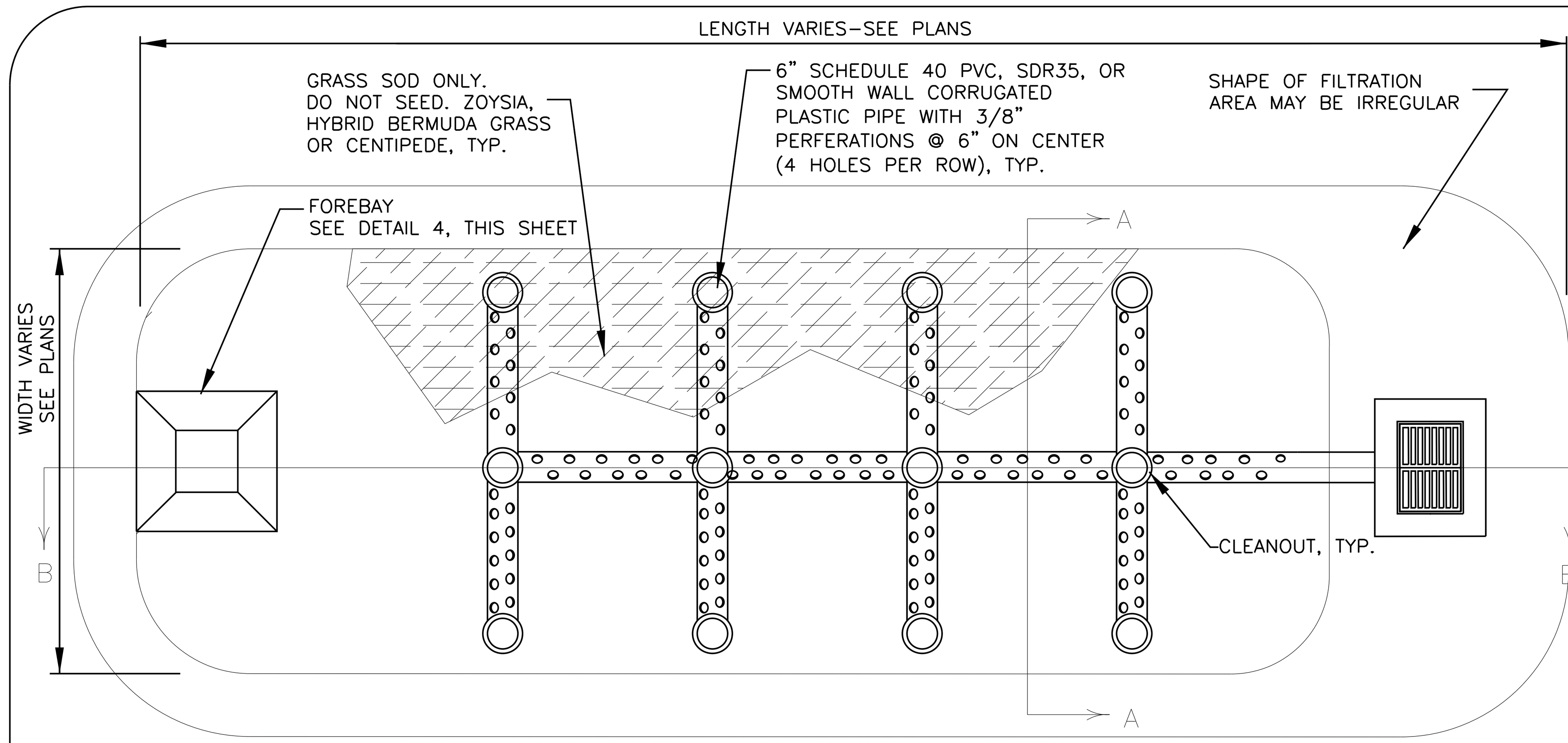

TYPICAL PLAN VIEW
NOT TO SCALE

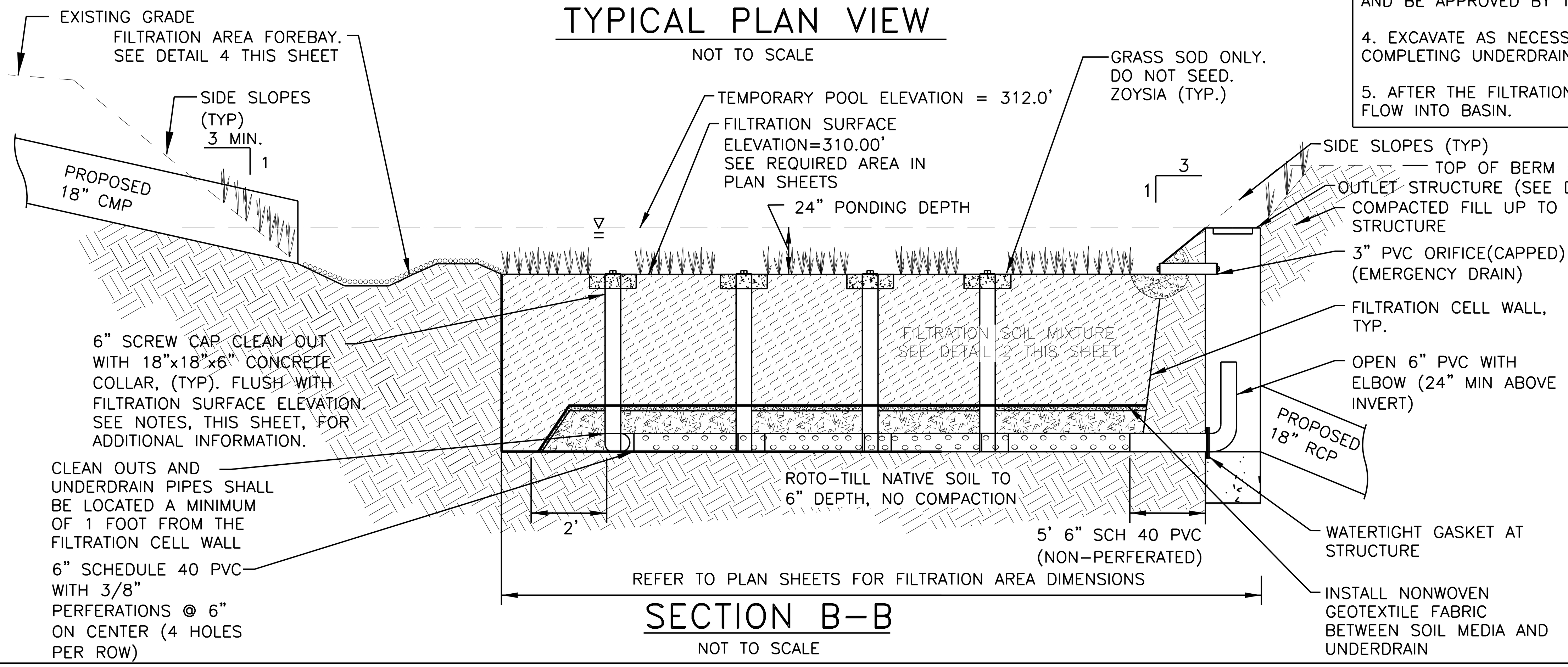

SECTION B-B
NOT TO SCALE

NOTES:
TEMPORARY PONDING DEPTH: 24"

UNDERDRAIN TO BE 6" SCHEDULE 40 PVC CORRUGATED PLASTIC PIPE WITH 3/8" PERF. @ 6" O.C., 4 HOLES PER ROW; MINIMUM OF 3" OF GRAVEL OVER PIPES; GRAVEL NOT NECESSARY UNDER PIPES. MINIMUM SLOPE FOR UNDERDRAIN SHALL BE 0.005 FT/FT

UNDERDRAIN PIPES AND CLEANOUTS SHOULD BE LOCATED IN THE QUANTITY AND ELEVATION FOUND ON THE GRADING AND DRAINAGE PLAN (SHEET 2D-6).

CLEANOUT PIPE SHALL BE LOCATED A MINIMUM OF 1.0' FROM THE FILTRATION CELL WALL.

EXPOSED CLEANOUT CAP AND CONNECTORS TO BE CONSTRUCTED OF WHITE UV RESISTANT PVC MATERIAL.

GRASS SOD: SOD IS TO BE PLANTED WITHIN THE FILTRATION AREA AND ALONG THE ADJACENT SIDE SLOPES. SOD IS TO BE ZOYSIA WHICH HAS BEEN GROWN IN SANDY SOILS. LARGE DEPOSITS OF FINES ATTACHED TO THE ROOTS SHALL BE WASHED OFF OR REMOVED FROM THE SOD PRIOR TO INSTALLATION.

THE LOCATION OF FILTRATION AREA SHALL BE PROTECTED FROM EROSION AND SEDIMENT DURING SITE CONSTRUCTION. FILTRATION SOIL MIXTURE SHALL NOT BE PLACED UNTIL THE SURROUNDING SITE IS STABILIZED AND APPROVED BY THE ENGINEER. THE CONTRACTOR SHALL BE RESPONSIBLE FOR REPLACING FILTRATION SOIL MIXTURE IMPACTED BY SEDIMENT DEPOSITS DURING CONSTRUCTION.

FILTRATION BASIN CONSTRUCTION SEQUENCE:
1. CONSTRUCT DRAINAGE MEASURES.

2. MAINTAIN EXISTING SYSTEM AS NECESSARY UNTIL FILTRATION MEDIA INSTALLATION IS COMPLETE. USE TEMPORARY BYPASS CONVEYANCE AS NECESSARY. (INTENTION IS TO BYPASS FLOW THROUGH EXISTING SYSTEM UNTIL THE BASIN IS STABLE)

3. ENSURE SITE IS PROPERLY STABILIZED WITH A GOOD STAND OF ESTABLISHED VEGETATION BEFORE PROCEEDING. ALL SLOPES DRAINING TO THE FILTRATION AREA SHOULD HAVE ESTABLISHED AT LEAST 90% VEGETATED COVERAGE, AND BE APPROVED BY THE ENGINEER.

4. EXCAVATE AS NECESSARY TO INSTALL FOREBAY, RIP RAP, UNDERDRAIN SYSTEM AND BIOSOIL MIXTURE AFTER COMPLETING UNDERDRAIN SYSTEM ADD BIOSOIL MIXTURE PER THE DETAILS ON THIS SHEET.

5. AFTER THE FILTRATION AREA HAS REACHED FINAL GRADE, REMOVE PORTION OF EXISTING SYSTEM TO ALLOW FLOW INTO BASIN.

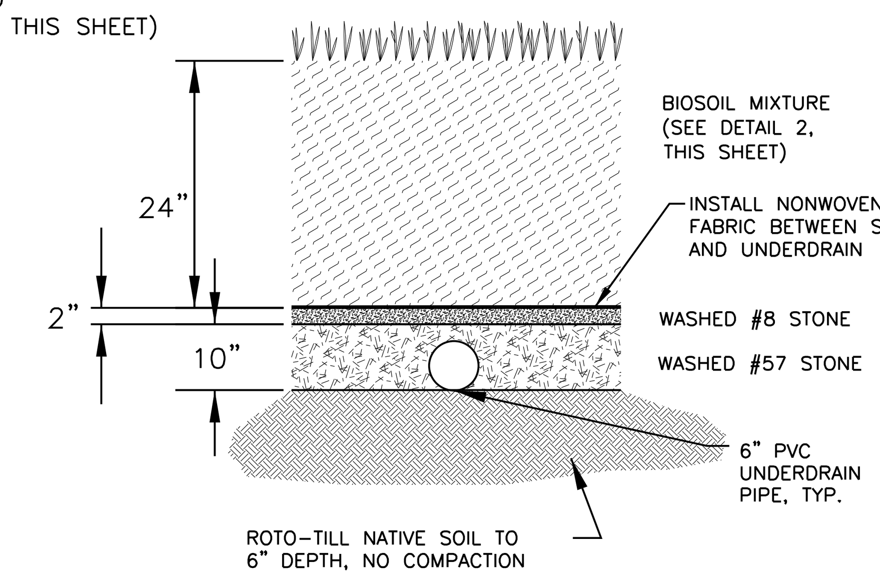

SECTION A-A
NOT TO SCALE

DETAIL 1: TYPICAL GRASS FILTRATION AREA
(NOT TO SCALE)
FROM -BMP-L- Sta. 352+25 to -BMP-Y16- Sta. 11+95

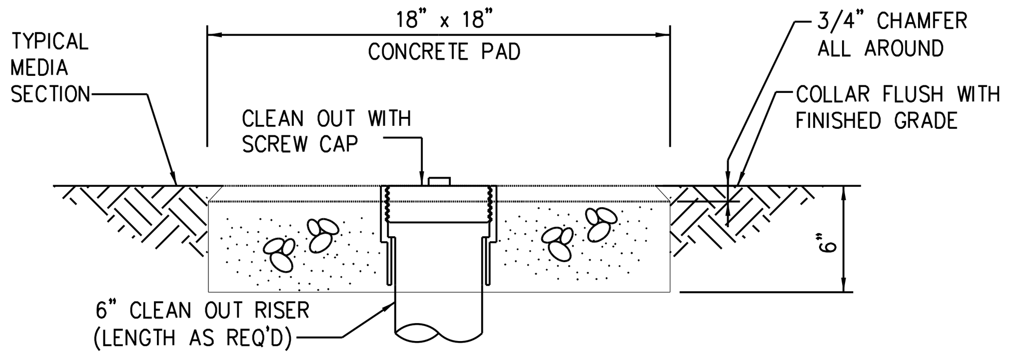

DETAIL 5: 18" x 18" x 6" CONCRETE COLLAR

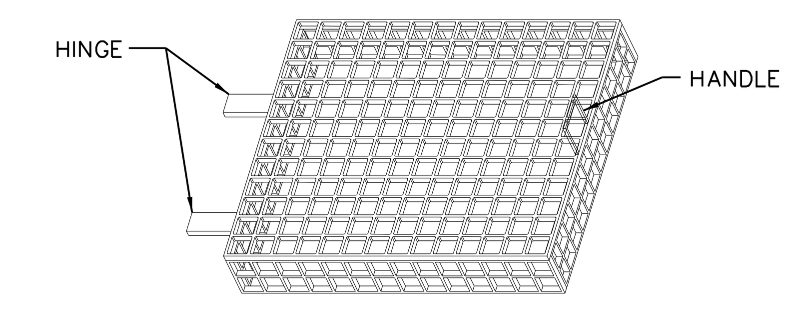

REMOVABLE TRASH RACK NOTES:
1. ALL JOINTS SHALL BE FULLY WELDED AROUND JOINT WITH A MINIMUM OF A 1/4" BEAD.
2. IF BOLTS ARE CHEMICALLY ANCHORED, FOLLOW 2018 NCDOT STD. DWG. 862.04 FOR ANCHORING PROCEDURE.
3. TRASH RACKS SHALL BE ATTACHED TO CONCRETE BOX BY HINGE OR SLIDE RAIL SYSTEM.
4. RACK AND HARDWARE SHALL BE ALUMINUM OR GALVANIZED IN ACCORDANCE WITH ASTM 153.
5. CONTRACTOR TO PROVIDE SHOP DRAWINGS OF THE PROPOSED TRASH RACKS TO THE ENGINEER FOR APPROVAL PRIOR TO FABRICATION AND INSTALLATION.

DETAIL 6: REMOVEABLE TRASH RACK
(NOT TO SCALE)

FILTRATION SOIL MIXTURE SHALL BE A MIX THAT MEETS THE FOLLOWING SPECIFICATION:

ITEM	PERCENT BY VOLUME	MATERIAL
SAND	80%	RECYCLED EXPANDED SLATE FINES
ORGANIC MATERIAL	20%	APPROVED COMPOST ORGANIC COMPONENT

FILTRATION SOIL MIXTURE (FSM): SHALL BE THOROUGHLY MECHANICALLY MIXED AT 1 PART COMPOST WITH 4 PARTS OF EXPANDED SLATE FINES UNTIL A UNIFORM DISTRIBUTION OF THE COMPONENTS IS ACHIEVED. SHALL BE PLACED AND GRADED USING LOW GROUND-CONTACT PRESSURE EQUIPMENT OR BY EXCAVATORS AND/OR BACKHOES OPERATING ON THE GROUND ADJACENT TO THE FILTRATION FACILITY. NO HEAVY EQUIPMENT SHALL BE USED WITHIN THE PERIMETER OF THE FILTRATION FACILITY BEFORE, DURING, OR AFTER THE PLACEMENT OF THE FSM. THE FSM SHALL BE PLACED IN HORIZONTAL LAYERS NOT TO EXCEED 12 INCHES FOR THE ENTIRE AREA OF THE FILTRATION FACILITY. THE FSM SHALL BE COMPACTED BY SATURATING THE ENTIRE AREA OF THE FILTRATION FACILITY AFTER EACH LIFT OF FSM IS PLACED UNTIL WATER FLOWS FROM THE UNDERDRAIN. WATER FOR SATURATION SHALL BE APPLIED BY SPRAYING OR SPRINKLING. AN APPROPRIATE SEDIMENT CONTROL DEVICE SHALL BE USED TO TREAT ANY SEDIMENT-LADEN WATER DISCHARGED FROM THE UNDERDRAIN. IF THE FSM BECOMES CONTAMINATED DURING THE CONSTRUCTION OF THE FACILITY, THE CONTAMINATED MATERIAL SHALL BE REMOVED AND REPLACED WITH UNCONTAMINATED MATERIAL AT NO ADDITIONAL COST TO THE ADMINISTRATION. FINAL GRADING OF THE FSM SHALL BE PERFORMED AFTER A 24-HOUR SETTLING PERIOD. FINAL ELEVATIONS SHALL BE WITHIN 2 INCHES OF ELEVATIONS SHOWN ON THE CONTRACT PLANS.

THE FILTRATION SOIL MIXTURE (FSM) SHALL HAVE A P-INDEX RANGE LESS THAN 30.

HYDRAULIC CONDUTIVITY OF FILTRATION SOIL MIX SHALL BE BETWEEN 3.0-6.0 IN/HR.

THE FILTRATION SOIL MIXTURE (FSM) SHALL BE A UNIFORM MIX, FREE OF STONES, STUMPS, ROOTS OR OTHER SIMILAR OBJECTS LARGER THAN TWO INCHES EXCLUDING MULCH. NO OTHER MATERIALS OR SUBSTANCES SHALL BE MIXED OR DUMPED WITHIN THE FILTRATION AREA THAT MAY BE HARMFUL TO PLANT GROWTH, OR PROVE A HINDRANCE TO THE PLANTING OR MAINTENANCE OPERATIONS.

PRIOR TO PLACING THE UNDERDRAIN AND THE FSM, THE BOTTOM OF THE EXCAVATION SHALL BE ROTO-TILLED TO A MINIMUM DEPTH OF 6 INCHES TO ALLEVIATE ANY COMPACTION OF THE FACILITY BOTTOM. ANY SUBSTITUTE METHOD FOR ROTO-TILLING MUST BE APPROVED BY THE ENGINEER PRIORTO USE. ANY PONDED WATER SHALL BE REMOVED FROM THE BOTTOM OF THE FACILITY AND THE SOIL SHALL BE FRIABLE BEFORE ROTO-TILLING.

DETAIL 2: FILTRATION SOIL MIXTURE

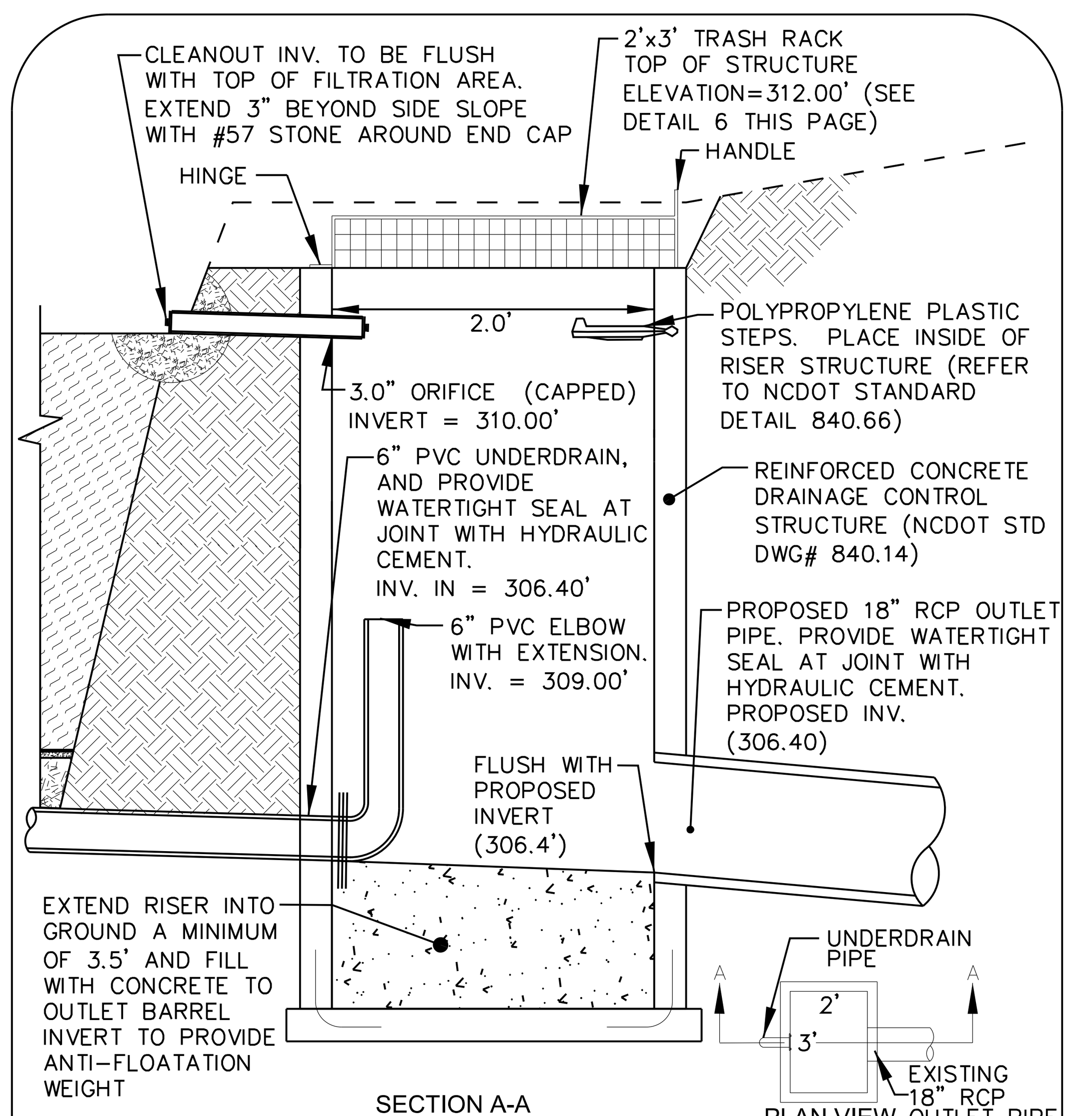

DETAIL 3: OUTLET STRUCTURE
(NOT TO SCALE)

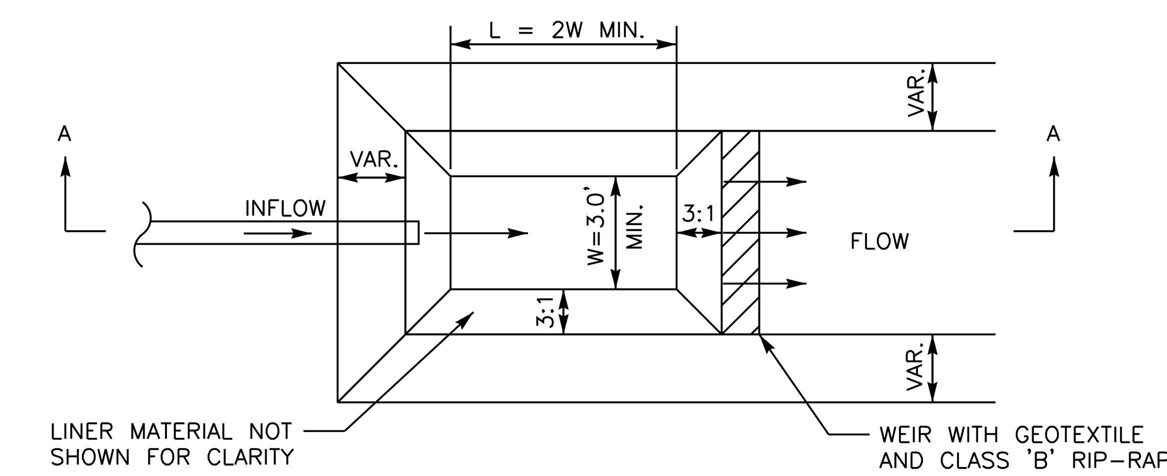

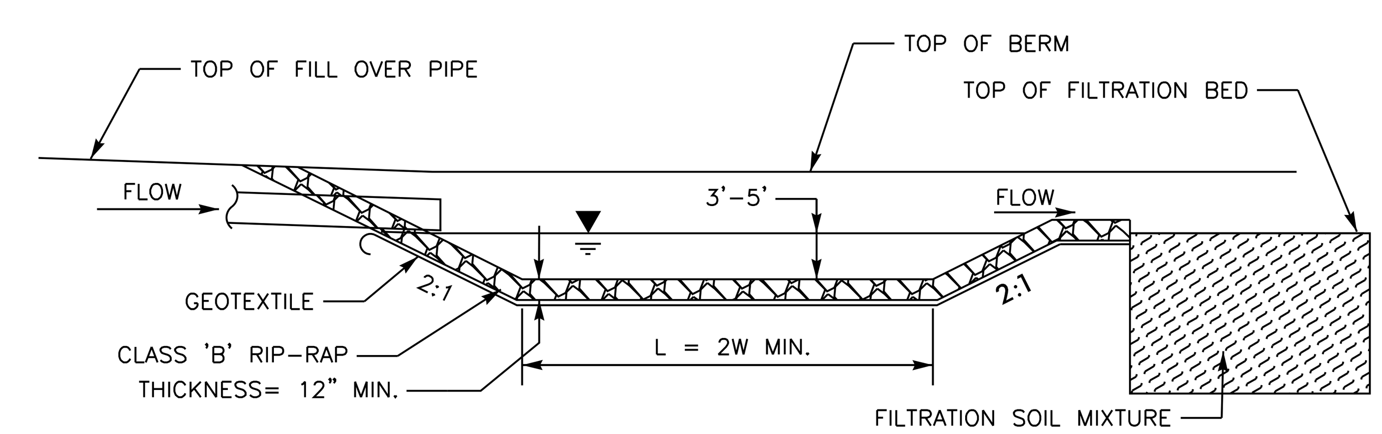

NOTES:
1) LINER MATERIAL TO BE SPECIFIED BY ENGINEER.
2) FOREBAY LAYOUT MAY BE IRREGULAR. SEE PLANS.
3) MODIFICATIONS MAY BE NEEDED, AS APPROVED BY ENGINEER.

DETAIL 4: FILTRATION AREA FOREBAY

12/6/2018

DocuSign Envelope ID: 42757270-3F64-4CD2-80B4-FA6D5CD3BE3A

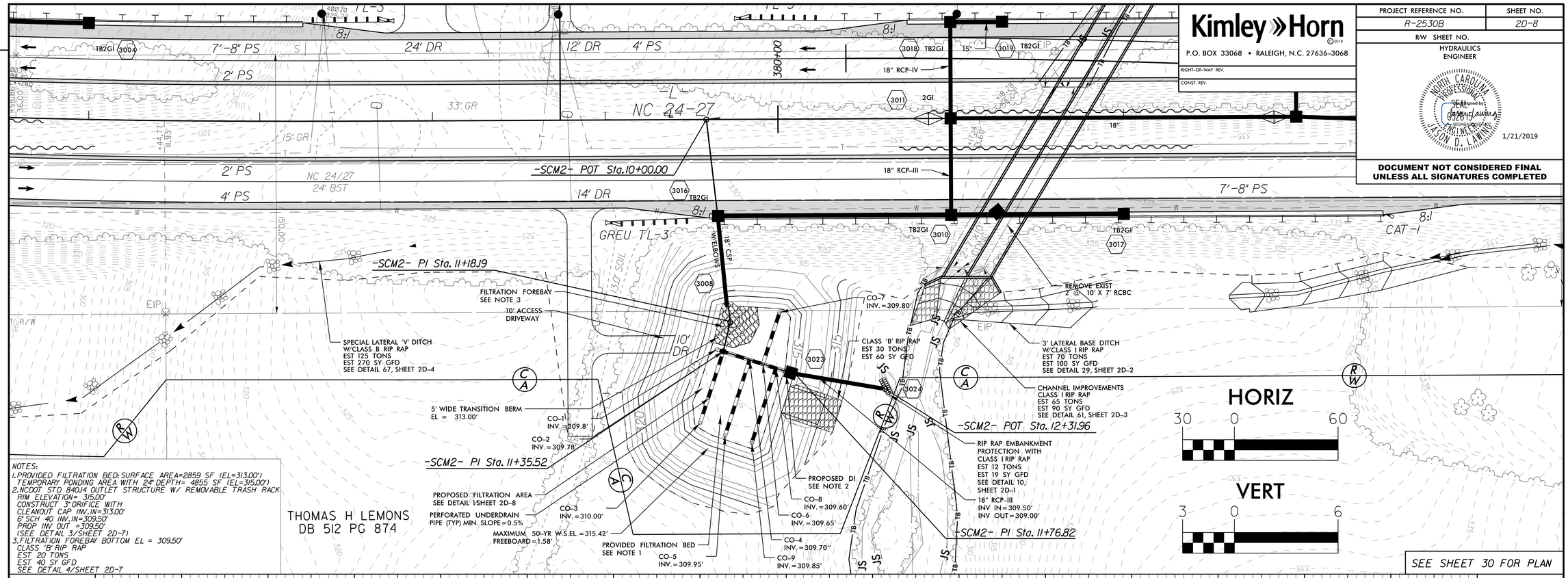

NOTES:
1. PROVIDED FILTRATION BED: SURFACE AREA=2859 SF (EL=313.00')
TEMPORARY PONDING AREA WITH 24" DEPTH= 4855 SF (EL=315.00')
2. NCDOT STD 840.14 OUTLET STRUCTURE W/ REMOVABLE TRASH RACK
RIM ELEVATION= 315.00'
CONSTRUCT 3" ORIFICE WITH
CLEANOUT CAP INV.IN=313.00'
6" SCH 40 INV.IN=309.50'
PROP INV OUT =309.50'
(SEE DETAIL 3/SHEET 2D-7)
3. FILTRATION FOREBAY BOTTOM EL = 309.50'
CLASS 'B' RIP RAP
EST 20 TONS
EST 40 SY GFD
SEE DETAIL 4/SHEET 2D-7

REVISIONS

12/6/2018

Kimley»Horn ©2018
P.O. BOX 33068 • RALEIGH, N.C. 27636-3068

RIGHT-OF-WAY REV.
CONST. REV.

PROJECT REFERENCE NO.	SHEET NO.
R-2530B	2D-8

R/W SHEET NO.

HYDRAULICS ENGINEER

SEAL
NORTH CAROLINA PROFESSIONAL ENGINEER SEAL 036015 JASON D. LAWRENCE
DocuSigned by: Jason Lawrence
1/21/2019

DOCUMENT NOT CONSIDERED FINAL UNLESS ALL SIGNATURES COMPLETED

DocuSign Envelope ID: 42757270-3F64-4CD2-80B4-FA6D5CD3BE3A

Kimley»Horn ©2018
P.O. BOX 33068 • RALEIGH, N.C. 27636-3068

HYDRAULICS ENGINEER

NORTH CAROLINA PROFESSIONAL SEAL 032616 ENGINEER JASON D. LAWING
1/21/2019

RIGHT-OF-WAY REV.
CONST. REV.

DOCUMENT NOT CONSIDERED FINAL UNLESS ALL SIGNATURES COMPLETED

REVISIONS

5/14/99

12/6/2018

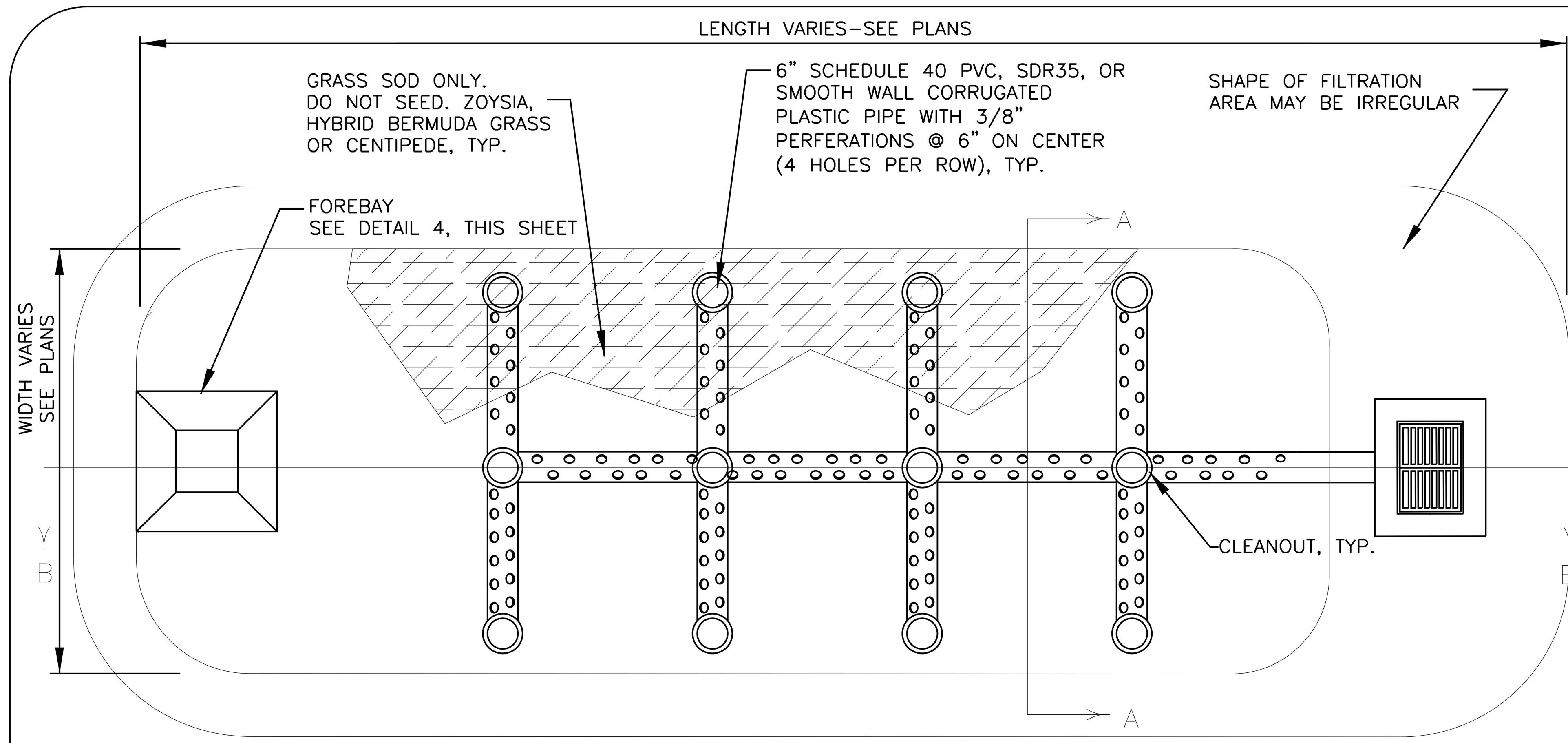

TYPICAL PLAN VIEW

NOT TO SCALE

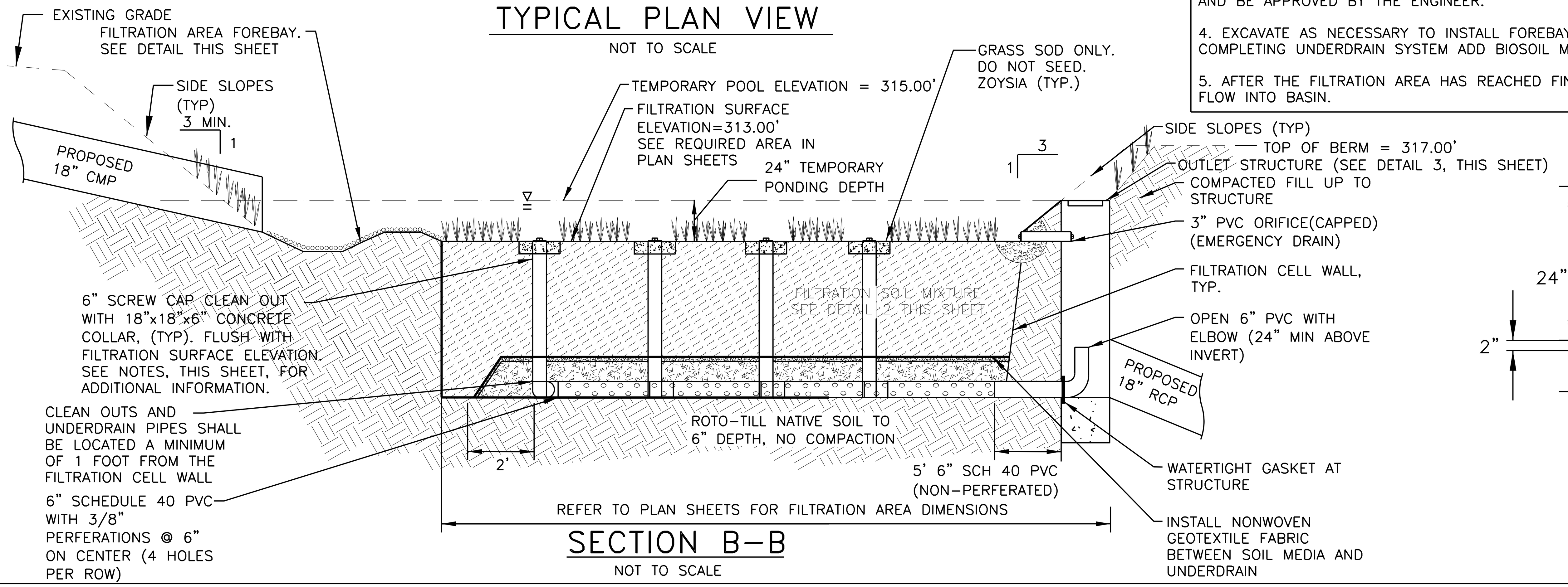

SECTION B-B

NOT TO SCALE

NOTES:
TEMPORARY PONDING DEPTH: 24"

UNDERDRAIN TO BE 6" SCHEDULE 40 PVC CORRUGATED PLASTIC PIPE WITH 3/8" PERF. @ 6" O.C., 4 HOLES PER ROW; MINIMUM OF 3" OF GRAVEL OVER PIPES; GRAVEL NOT NECESSARY UNDER PIPES. MINIMUM SLOPE FOR UNDERDRAIN SHALL BE 0.005 FT/FT

UNDERDRAIN PIPES AND CLEANOUTS SHOULD BE LOCATED IN THE QUANTITY AND ELEVATION FOUND ON THE GRADING AND DRAINAGE PLAN (SHEET 4).

CLEANOUT PIPE SHALL BE LOCATED A MINIMUM OF 1.0' FROM THE FILTRATION CELL WALL.

EXPOSED CLEANOUT CAP AND CONNECTORS TO BE CONSTRUCTED OF WHITE UV RESISTANT PVC MATERIAL.

GRASS SOD: SOD IS TO BE PLANTED WITHIN THE FILTRATION AREA AND ALONG THE ADJACENT SIDE SLOPES. SOD IS TO BE ZOYSIA WHICH HAS BEEN GROWN IN SANDY SOILS. LARGE DEPOSITS OF FINES ATTACHED TO THE ROOTS SHALL BE WASHED OFF OR REMOVED FROM THE SOD PRIOR TO INSTALLATION.

THE LOCATION OF FILTRATION AREA SHALL BE PROTECTED FROM EROSION AND SEDIMENT DURING SITE CONSTRUCTION. FILTRATION SOIL MIXTURE SHALL NOT BE PLACED UNTIL THE SURROUNDING SITE IS STABILIZED AND APPROVED BY THE ENGINEER. THE CONTRACTOR SHALL BE RESPONSIBLE FOR REPLACING FILTRATION SOIL MIXTURE IMPACTED BY SEDIMENT DEPOSITS DURING CONSTRUCTION.

FILTRATION BASIN CONSTRUCTION SEQUENCE:
1. CONSTRUCT EROSION CONTROL MEASURES.

2. MAINTAIN EXISTING SYSTEM AS NECESSARY UNTIL FILTRATION MEDIA INSTALLATION IS COMPLETE. USE TEMPORARY BYPASS CONVEYANCE AS NECESSARY. (INTENTION IS TO BYPASS FLOW THROUGH EXISTING SYSTEM UNTIL THE BASIN IS STABLE)

3. ENSURE SITE IS PROPERLY STABILIZED WITH A GOOD STAND OF ESTABLISHED VEGETATION BEFORE PROCEEDING. ALL SLOPES DRAINING TO THE FILTRATION AREA SHOULD HAVE ESTABLISHED AT LEAST 90% VEGETATED COVERAGE, AND BE APPROVED BY THE ENGINEER.

4. EXCAVATE AS NECESSARY TO INSTALL FOREBAY, RIP RAP, UNDERDRAIN SYSTEM AND BIOSOIL MIXTURE AFTER COMPLETING UNDERDRAIN SYSTEM ADD BIOSOIL MIXTURE PER THE DETAILS ON THIS SHEET.

5. AFTER THE FILTRATION AREA HAS REACHED FINAL GRADE, REMOVE PORTION OF EXISTING SYSTEM TO ALLOW FLOW INTO BASIN.

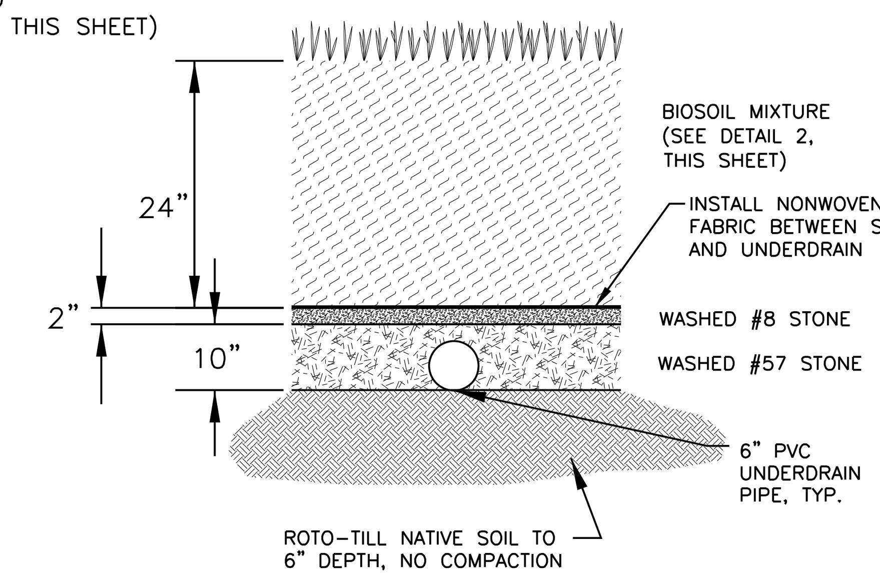

SECTION A-A

NOT TO SCALE

DETAIL 1: TYPICAL GRASS FILTRATION AREA

(NOT TO SCALE)

FROM -BMP-L- Sta. 379+09 to -BMP-Y16- Sta. 380+61

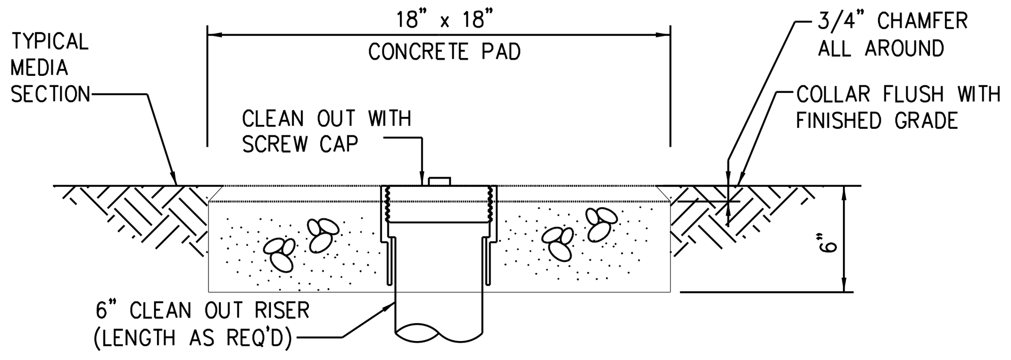

DETAIL 5: 18" x 18" x 6" CONCRETE COLLAR

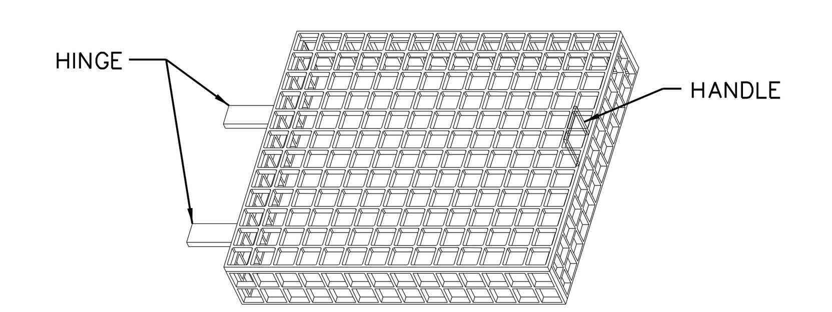

REMOVABLE TRASH RACK NOTES:
1. ALL JOINTS SHALL BE FULLY WELDED AROUND JOINT WITH A MINIMUM OF A 1/4" BEAD.
2. IF BOLTS ARE CHEMICALLY ANCHORED, FOLLOW 2018 NCDOT STD. DWG. 862.04 FOR ANCHORING PROCEDURE.
3. TRASH RACKS SHALL BE ATTACHED TO CONCRETE BOX BY HINGE OR SLIDE RAIL SYSTEM.
4. RACK AND HARDWARE SHALL BE ALUMINUM OR GALVANIZED IN ACCORDANCE WITH ASTM 153.
5. CONTRACTOR TO PROVIDE SHOP DRAWINGS OF THE PROPOSED TRASH RACKS TO THE ENGINEER FOR APPROVAL PRIOR TO FABRICATION AND INSTALLATION.

DETAIL 6: REMOVEABLE TRASH RACK

(NOT TO SCALE)

FILTRATION SOIL MIXTURE SHALL BE A MIX THAT MEETS THE FOLLOWING SPECIFICATION:

ITEM	PERCENT BY VOLUME	MATERIAL
SAND	80%	RECYCLED EXPANDED SLATE FINES
ORGANIC MATTER	20%	APPROVED COMPOST ORGANIC COMPONENT

FILTRATION SOIL MIXTURE (FSM): SHALL BE THOROUGHLY MECHANICALLY MIXED AT 1 PART COMPOST WITH 4 PARTS OF EXPANDED SLATE FINES UNTIL A UNIFORM DISTRIBUTION OF THE COMPONENTS IS ACHIEVED. SHALL BE PLACED AND GRADED USING LOW GROUND-CONTACT PRESSURE EQUIPMENT OR BY EXCAVATORS AND/OR BACKHOES OPERATING ON THE GROUND ADJACENT TO THE FILTRATION FACILITY. NO HEAVY EQUIPMENT SHALL BE USED WITHIN THE PERIMETER OF THE FILTRATION FACILITY BEFORE, DURING, OR AFTER THE PLACEMENT OF THE FSM. THE FSM SHALL BE PLACED IN HORIZONTAL LAYERS NOT TO EXCEED 12 INCHES FOR THE ENTIRE AREA OF THE FILTRATION FACILITY. THE FSM SHALL BE COMPACTED BY SATURATING THE ENTIRE AREA OF THE FILTRATION FACILITY AFTER EACH LIFT OF FSM IS PLACED UNTIL WATER FLOWS FROM THE UNDERDRAIN. WATER FOR SATURATION SHALL BE APPLIED BY SPRAYING OR SPRINKLING. AN APPROPRIATE SEDIMENT CONTROL DEVICE SHALL BE USED TO TREAT ANY SEDIMENT-LADEN WATER DISCHARGED FROM THE UNDERDRAIN. IF THE FSM BECOMES CONTAMINATED DURING THE CONSTRUCTION OF THE FACILITY, THE CONTAMINATED MATERIAL SHALL BE REMOVED AND REPLACED WITH UNCONTAMINATED MATERIAL AT NO ADDITIONAL COST TO THE ADMINISTRATION. FINAL GRADING OF THE FSM SHALL BE PERFORMED AFTER A 24-HOUR SETTLING PERIOD. FINAL ELEVATIONS SHALL BE WITHIN 2 INCHES OF ELEVATIONS SHOWN ON THE CONTRACT PLANS.

THE FILTRATION SOIL MIXTURE (FSM) SHALL HAVE A P-INDEX RANGE LESS THAN 30.

HYDRAULIC CONDUTIVITY OF FILTRATION SOIL MIX SHALL BE BETWEEN 3.0-6.0 IN/HR.

THE FILTRATION SOIL MIXTURE (FSM) SHALL BE A UNIFORM MIX, FREE OF STONES, STUMPS, ROOTS OR OTHER SIMILAR OBJECTS LARGER THAN TWO INCHES EXCLUDING MULCH. NO OTHER MATERIALS OR SUBSTANCES SHALL BE MIXED OR DUMPED WITHIN THE FILTRATION AREA THAT MAY BE HARMFUL TO PLANT GROWTH, OR PROVE A HINDRANCE TO THE PLANTING OR MAINTENANCE OPERATIONS.

PRIOR TO PLACING THE UNDERDRAIN AND THE FSM, THE BOTTOM OF THE EXCAVATION SHALL BE ROTO-TILLED TO A MINIMUM DEPTH OF 6 INCHES TO ALLEVIATE ANY COMPACTION OF THE FACILITY BOTTOM. ANY SUBSTITUTE METHOD FOR ROTO-TILLING MUST BE APPROVED BY THE ENGINEER PRIORTO USE. ANY PONDED WATER SHALL BE REMOVED FROM THE BOTTOM OF THE FACILITY AND THE SOIL SHALL BE FRIABLE BEFORE ROTO-TILLING.

DETAIL 2: FILTRATION SOIL MIXTURE

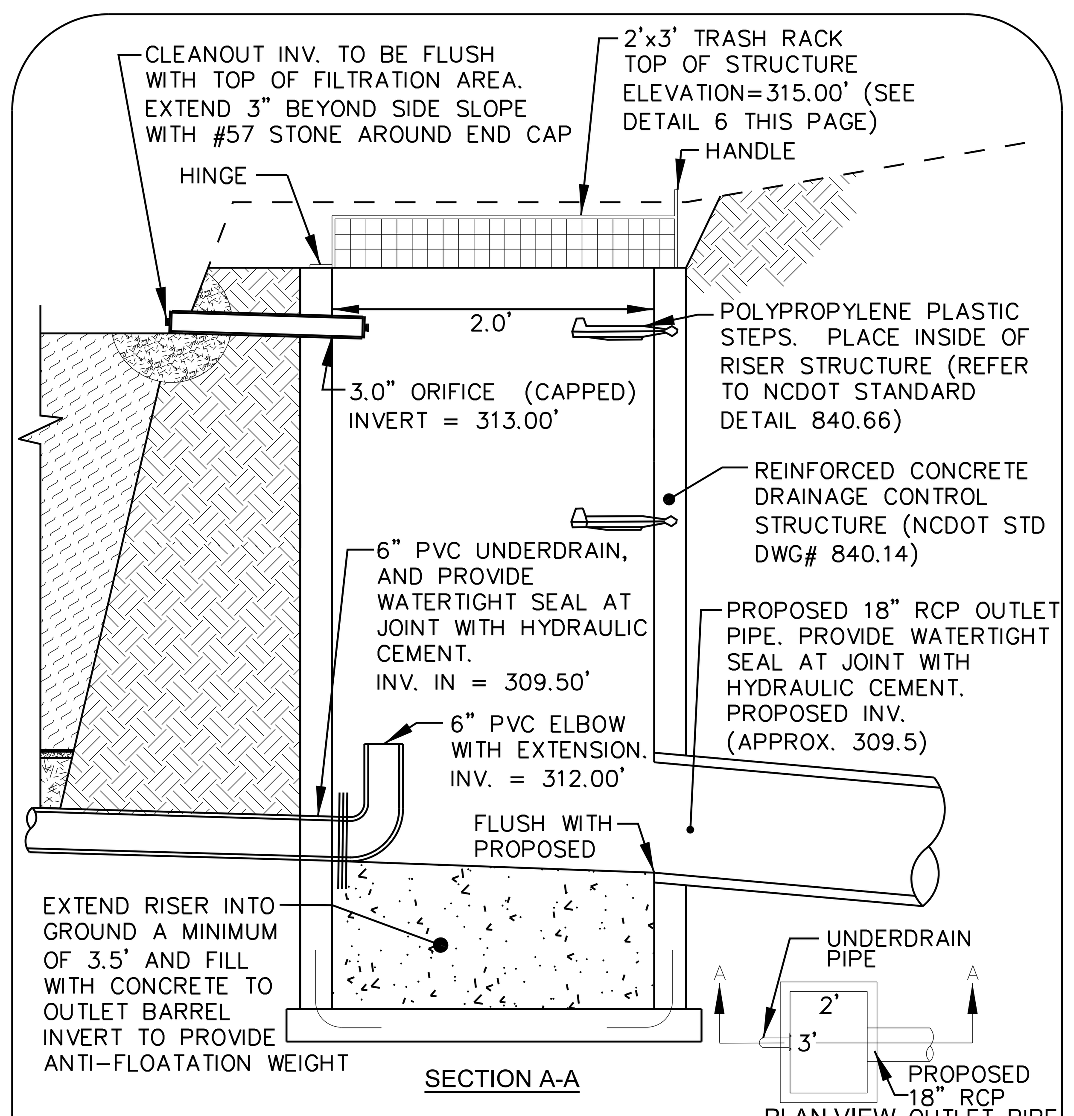

DETAIL 3: OUTLET STRUCTURE

(NOT TO SCALE)

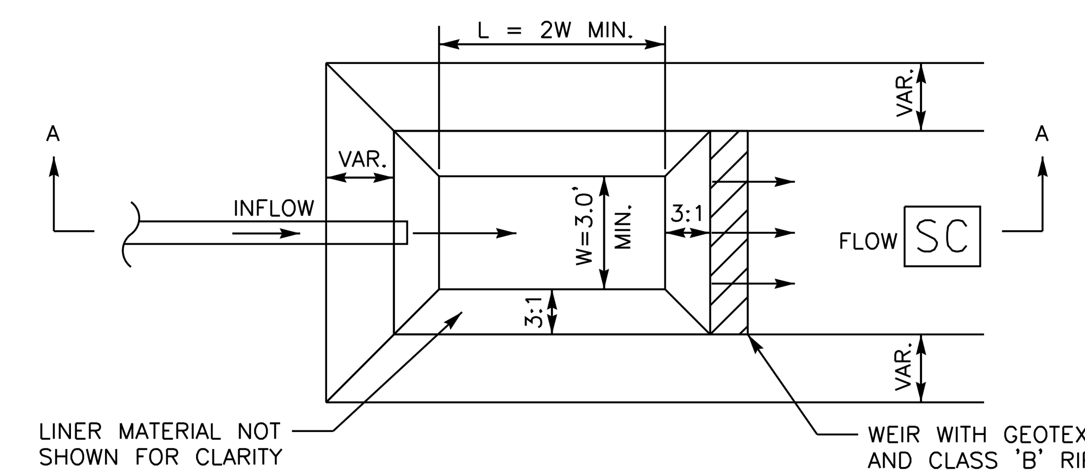

PLAN

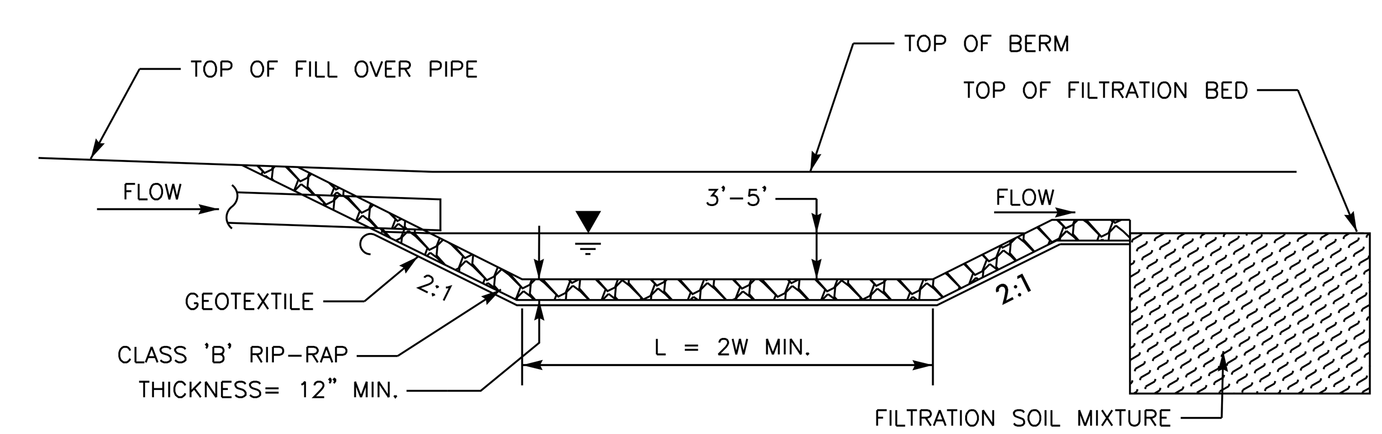

SECTION A-A

NOTES:
1) LINER MATERIAL TO BE SPECIFIED BY ENGINEER.
2) FOREBAY LAYOUT MAY BE IRREGULAR. SEE PLANS.
3) MODIFICATIONS MAY BE NEEDED, AS APPROVED BY ENGINEER.

DETAIL 4: FILTRATION AREA FOREBAY

COMPUTED BY: BTV DATE: 12/4/2018
CHECKED BY: RSH DATE: 12/4/2018

STATE OF NORTH CAROLINA
DIVISION OF HIGHWAYS

PROJECT REFERENCE NO.	SHEET NO.
R-2530B	2D-10

Kimley»Horn ©2018
421 FAYETTEVILLE STREET, SUITE 600
RALEIGH, NC 27601

REVISIONS

SUMMARY OF BASIN COMPONENT ITEMS
(for Stormwater BMP's)

ITEM DESCRIPTION	UNIT	QUANTITY		
		BASIN 1 (353+00 –L– RT)	BASIN 2 (380+00 –L– RT)	PROJECT TOTALS
GENERIC DRAINAGE ITEM – 6" UNDERDRAIN PIPE – PERFORATED	LF	180	210	390
GENERIC DRAINAGE ITEM – 6" UNDERDRAIN PIPE – NON-PERFORATED	LF	5	5	10
GENERIC DRAINAGE ITEM – 6" PVC CLEANOUT	LF	22	28	50
GENERIC DRAINAGE ITEM – 3" PVC, SCHEDULE 40	LF	7	7	14
#57 STONE	TON	125	120	245
GENERIC DRAINAGE ITEM – REMOVABLE TRASH RACK	EA	1	1	2
GENERIC DRAINAGE ITEM – CONCRETE COLLAR	EA	7	9	16
GENERIC DRAINAGE ITEM – SAND BAGS	EA	10	10	20
GENERIC DRAINAGE ITEM – POLYPROPYLENE NONWOVEN GEOTEXTILE FABRIC	SY	390	375	765
GENERIC DRAINAGE ITEM – #8 STONE	TON	30	25	55
GENERIC DRAINAGE ITEM – ANTI-FLOTATION CONCRETE	CY	1	1	2
GENERIC DRAINAGE ITEM – FILTRATION SOIL MIXTURE	CY	230	215	445
RIP RAP, CLASS B	TON	25	20	45
GEOTEXTILE FOR DRAINAGE	SY	55	40	95
SODDING	SY	1500	1750	3250
WATER	M/G	50	50	100

NOTE: OUTLET CONTROL BOXES AND OUTLET PIPES INCLUDED ON DRAINAGE SUMMARY SHEETS 3D-18 FOR BASIN 1 AND 3D-20 FOR BASIN 2

SUMMARY OF EARTHWORK
(for Stormwater BMP's)

ITEM DESCRIPTION	UNIT	QUANTITY		
		BASIN 1 (353+00 –L– RT)	BASIN 2 (380+00 –L– RT)	PROJECT TOTALS
GENERIC GRADING ITEM – INFILTRATION BASIN EXCAVATION	CY	975	1225	2200
BASIN CLEARING AND GRUBBING	ACR	0.55	0.60	1.15

NOTE: CLEARING AND GRUBBING QUANTITIES FOR BASIN 1 AND BASIN 2 FOR INFORMATION ONLY.
CLEARING AND GRUBBING QUANTITIES INCLUDED IN CALCULATION SHEET.

5/28/99

12/4/2018

PROJECT REFERENCE NO.	SHEET NO.
R-2530B (34446)	2G-1

GEOTECHNICAL ENGINEER

NORTH CAROLINA PROFESSIONAL SEAL 29869 ENGINEER SHANE C. CLARK

DocuSigned by: Shane C. Clark 1F4E87E6D6AD4EA...

9/26/2018

SIGNATURE DATE

ENGINEER

SIGNATURE DATE

DOCUMENT NOT CONSIDERED FINAL UNLESS ALL SIGNATURES COMPLETED

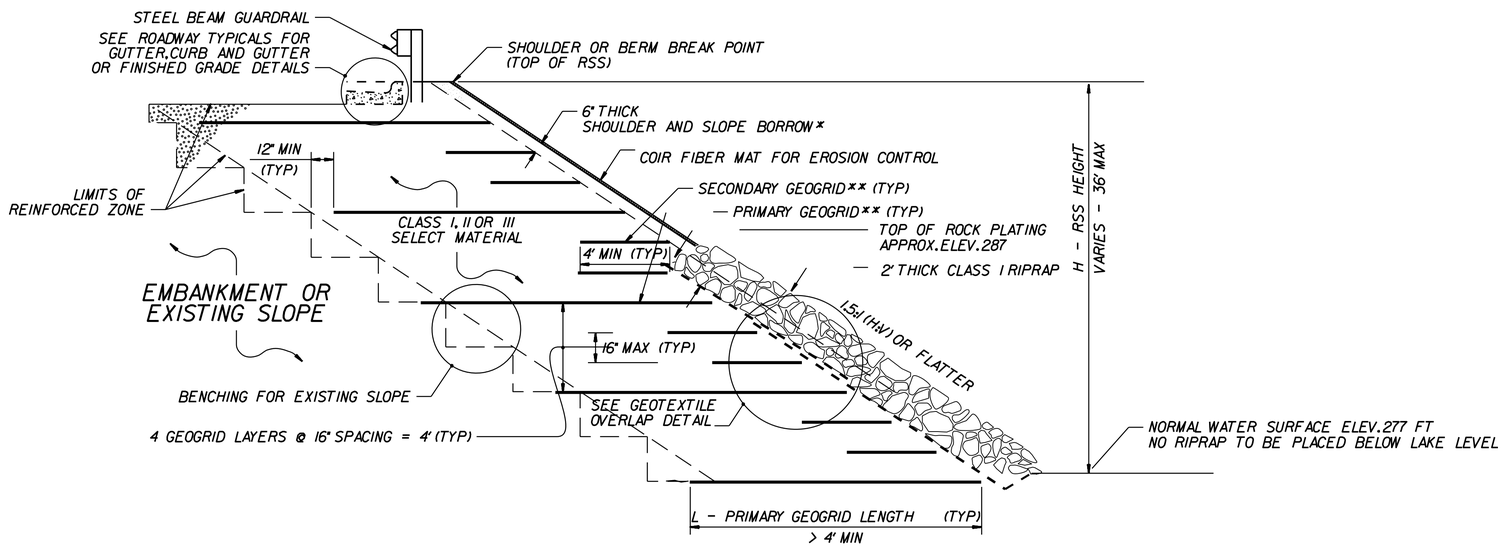

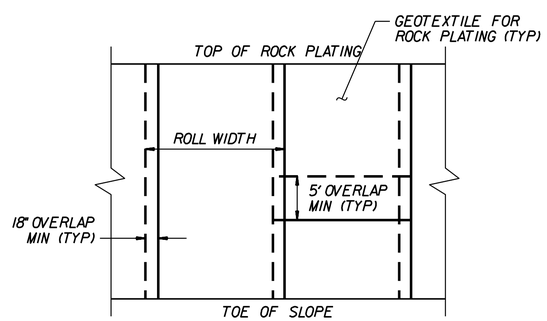

GEOTEXTILE OVERLAP DETAIL

(PLAN VIEW)

ESTIMATED QUANTITIES	
REINFORCED SOIL SLOPE	750 SQ.YDS.
ROCK PLATING	375 SQ.YDS.

PREPARED BY: SCC	DATE: 9/4/18
REVIEWED BY:	DATE:

NORTH CAROLINA DEPARTMENT OF TRANSPORTATION DIVISION OF HIGHWAYS

GEOTECHNICAL ENGINEERING UNIT

REINFORCED SLOPE WITH COIR MATTING/ROCK PLATING FOR USE BETWEEN STATIONS 362+50 -L- TO 364+00 -L- (RT)

REVISIONS

NO.	BY	DATE	NO.	BY	DATE
1			3		
2			4		

PROJECT REFERENCE NO.	SHEET NO.
R-2530B (34446)	2G-2

GEOTECHNICAL ENGINEER

NORTH CAROLINA PROFESSIONAL SEAL 29869 ENGINEER SHANE C. CLARK

DocuSigned by: Shane C. Clark 1F4E87E6D6AD4EA...

9/26/2018

SIGNATURE DATE

ENGINEER

SIGNATURE DATE

DOCUMENT NOT CONSIDERED FINAL UNLESS ALL SIGNATURES COMPLETED

ROCK PLATING (RP) NOTES:

1. SEE ROADWAY PLANS AND SUMMARY SHEETS FOR ROCK PLATING LOCATIONS.
2. FOR STANDARD ROCK PLATING, SEE SECTION 275 OF THE STANDARD SPECIFICATIONS.
3. USE CLASS 1, 2 OR B RIPRAP UNLESS REQUIRED OTHERWISE IN THE ROADWAY SUMMARY SHEETS.

REINFORCED SOIL SLOPE (RSS) NOTES:

1. SEE EROSION CONTROL AND ROADWAY PLANS AND SUMMARY SHEETS FOR REINFORCED SOIL SLOPE (RSS) AND SLOPE EROSION CONTROL LOCATIONS.
2. FOR STANDARD REINFORCED SOIL SLOPES, SEE REINFORCED SOIL SLOPES PROVISION. FOR STEEL BEAM GUARDRAIL, SEE SECTION 862 OF THE STANDARD SPECIFICATIONS.
3. FOR SHOULDER AND SLOPE BORROW, SEE ARTICLE 1019-2 OF THE STANDARD SPECIFICATIONS. FOR GEOCELLS, SEE CELLULAR CONFINEMENT SYSTEMS PROVISION. FOR COIR FIBER MAT, MATTING FOR EROSION CONTROL AND COMPOST BLANKET, SEE EROSION CONTROL PROVISIONS, SECTION 1631 OF THE STANDARD SPECIFICATIONS AND ROADWAY STANDARD DRAWING NO. 1631.01.
4. STANDARD RSS ARE BASED ON THE FOLLOWING IN-SITU ASSUMED SOIL PARAMETERS:
   UNIT WEIGHT, γ = 120 PCF
   FRICTION ANGLE, ϕ = 30 DEGREES
   COHESION, c = 0 PSF
5. DO NOT USE STANDARD RSS IF ASSUMED SOIL PARAMETERS ARE NOT APPLICABLE OR DEPTH TO GROUNDWATER IS LESS THAN 7 FT.
6. DO NOT USE STANDARD RSS WHEN VERY LOOSE OR SOFT SOIL OR MUCK IS BELOW RSS.
7. GEOGRIDS ARE TYPICALLY APPROVED FOR ULTIMATE TENSILE STRENGTHS IN THE MACHINE DIRECTION (MD) AND CROSS-MACHINE DIRECTION (CD) OR LONG-TERM DESIGN STRENGTHS FOR A 75-YEAR DESIGN LIFE IN THE MD BASED ON MATERIAL TYPE. THE LIST OF APPROVED GEOGRIDS WITH DESIGN STRENGTHS IS AVAILABLE FROM:
   connect.ncdot.gov/resources/Materials/Pages/Materials-Manual-by-Material.aspx
   DEFINE MATERIAL TYPE FROM THE WEBSITE ABOVE FOR SELECT MATERIAL AS FOLLOWS:

MATERIAL TYPE	SELECT MATERIAL
BORROW	CLASS I SELECT MATERIAL
FINE AGGREGATE	CLASS II OR III SELECT MATERIAL

   IF THE WEBSITE DOES NOT LIST A LONG-TERM DESIGN STRENGTH FOR AN APPROVED GEOGRID IN THE MD, DO NOT USE THE GEOGRID FOR PRIMARY GEOGRID. IF THE WEBSITE DOES NOT LIST A LONG-TERM DESIGN STRENGTH FOR AN APPROVED GEOGRID IN THE CD, USE A LONG-TERM DESIGN STRENGTH EQUAL TO THE ULTIMATE TENSILE STRENGTH DIVIDED BY 7 FOR THE SECONDARY GEOGRID.
8. DO NOT OVERLAP PRIMARY GEOGRIDS IN THE MD SO OVERLAPS ARE PARALLEL TO THE TOE OF RSS. POLYOLEFIN (e.g., HDPE OR PP) GEOGRIDS MAY BE SPLICED ONCE PER PRIMARY GEOGRID LENGTH IN ACCORDANCE WITH THE GEOGRID MANUFACTURER'S INSTRUCTIONS. USE POLYOLEFIN GEOGRID PIECES AT LEAST 4' LONG. DO NOT SPLICE POLYESTER TYPE (PET) GEOGRIDS.
9. FOR PRIMARY GEOGRIDS WITH 100% COVERAGE, PLACE PRIMARY GEOGRIDS SO GEOGRIDS ARE ADJACENT TO EACH OTHER IN THE CD. FOR PRIMARY GEOGRIDS WITH 75% TO LESS THAN 100% COVERAGE,

   MINIMUM REQUIRED LONG-TERM DESIGN STRENGTH = LTDS BASED ON 100% COVERAGE x (W + S) / W

   SEE TABLE FOR LTDS BASED ON 100% COVERAGE AND GEOGRID PLACEMENT DETAILS FOR PRIMARY GEOGRID ROLL WIDTH (W) AND SPACING (S). FOR PRIMARY GEOGRIDS WITH LESS THAN 100% COVERAGE, STAGGER PRIMARY GEOGRIDS SO GEOGRIDS ARE CENTERED OVER GAPS IN THE PRIMARY GEOGRID LAYER BELOW. DO NOT USE LESS THAN 75% COVERAGE FOR PRIMARY GEOGRIDS.
10. DO NOT PLACE ANY GEOGRIDS UNTIL EXCAVATION DIMENSIONS AND IN-SITU MATERIAL ARE APPROVED.
11. FOR SLOPE EROSION CONTROL, USE GEOCELLS OR MATTING ON SLOPE FACES OF RSS AS FOLLOWS:

RSS ANGLE	SLOPE EROSION CONTROL
1:1 TO < 1.5:1 (H:V)	GEOCELLS WITH COMPOST BLANKET
1.5:1 TO < 2:1 (H:V)	GEOCELLS WITH COMPOST BLANKET OR COIR FIBER MAT WITH SHOULDER AND SLOPE BORROW*
2:1 (H:V) OR FLATTER	MATTING FOR EROSION CONTROL WITH SHOULDER AND SLOPE BORROW

*SEE REINFORCED SOIL SLOPES AND SLOPE EROSION CONTROL SUMMARY TABLE IN THE ROADWAY SUMMARY SHEETS FOR SLOPE EROSION CONTROL ON SLOPE FACES OF RSS 1.5:1 (H:V) TO STEEPER THAN 2:1.

H (FT)	0 - < 12		12 - 24		> 24 - 36	
SELECT MATERIAL CLASS	I	II OR III	I	II OR III	I	II OR III
1:1 TO < 1.5:1 (H:V) RSS	1.10	1.00	0.90	0.85	0.85	0.80
1.5:1 TO 1.75:1 (H:V) RSS	0.90	0.80	0.75	0.70	0.75	0.70
> 1.75:1 TO < 2:1 (H:V) RSS	0.75	0.70	0.65	0.60	0.65	0.60

L/H RATIO (L > 4' MIN)

(IF L ≤ 4', USE SECONDARY GEOGRID INSTEAD OF PRIMARY GEOGRID.)

GEOGRID TYPE, DIRECTION	H (FT)	0 - < 12		12 - 24		> 24 - 36	
	SELECT MATERIAL CLASS	I	II OR III	I	II OR III	I	II OR III
PRIMARY GEOGRID, MD (SUBSTITUTE SECONDARY GEOGRID FOR PRIMARY GEOGRID FOR 2:1 (H:V) OR FLATTER RSS)	1:1 TO < 1.5:1 (H:V) RSS	900	500	1200	900	1800	1200
	1.5:1 TO 1.75:1 (H:V) RSS	500	500	900	500	1400	1000
	> 1.75:1 TO < 2:1 (H:V) RSS	500	500	600	500	1000	800
SECONDARY GEOGRID, CD	1:1 (H:V) OR FLATTER RSS	185					

LTDS – MINIMUM REQUIRED LONG-TERM DESIGN STRENGTH (LB/FT)

(LTDS IS BASED ON 100% COVERAGE FOR PRIMARY GEOGRID. SEE NOTE 9 FOR LESS THAN 100% COVERAGE.)

PREPARED BY: SCC	DATE: 9/4/18
REVIEWED BY:	DATE:

NORTH CAROLINA DEPARTMENT OF TRANSPORTATION
DIVISION OF HIGHWAYS

GEOTECHNICAL ENGINEERING UNIT

REINFORCED SLOPE WITH COIR MATTING/ROCK PLATING FOR USE BETWEEN STATIONS 362+50 -L- TO 364+00 L- (RT)

REVISIONS

NO.	BY	DATE	NO.	BY	DATE
1			3		
2			4		

PROJECT REFERENCE NO.	SHEET NO.
R-2530B	2G-3

GEOTECHNICAL ENGINEER

NORTH CAROLINA PROFESSIONAL SEAL 022246 ENGINEER SCOTT A. HIDDEN

DocuSigned by: Scott A. Hidden 10/22/2018
E760CAEB96FC4D3... SIGNATURE DATE

ENGINEER

SIGNATURE DATE

DOCUMENT NOT CONSIDERED FINAL UNLESS ALL SIGNATURES COMPLETED

GROUNDWATER CONDITION (SEE NOTE 6)	H SHORING HEIGHT (FT)	SLOPE OR SURCHARGE CASE WITH NO TRAFFIC IMPACT					SURCHARGE CASE WITH TRAFFIC IMPACT				
		SHEET PILES		H-PILES WITH TIMBER LAGGING			SHEET PILES		H-PILES WITH TIMBER LAGGING		
		MINIMUM REQUIRED EMBEDMENT (FT)	MINIMUM REQUIRED SECTION MODULUS (IN^3/FT)	MINIMUM REQUIRED EMBEDMENT* (FT) (SEE NOTE 10)			MINIMUM REQUIRED EMBEDMENT (FT)	MINIMUM REQUIRED SECTION MODULUS (IN^3/FT)	MINIMUM REQUIRED EMBEDMENT* (FT) (SEE NOTE 10)		
				HP 10x42	HP 12x53	HP 14x73			HP 10x42	HP 12x53	HP 14x73
GROUNDWATER ELEVATION BEWTEEN BOTTOM OF SHORING AND PILE TIP	< 6	11.5	4.5	11.5	11.5	11.5	16.0	12.0	13.0	13.0	13.0
	7	13.0	7.0	13.0	13.0	13.0	17.0	14.5	14.5	14.5	14.5
	8	15.0	10.0	--	15.0	15.0	18.0	17.0	--	15.5	15.5
	9	17.0	14.0	--	17.0	17.0	19.0	20.0	--	17.0	17.0
	10	18.5	19.5	--	--	18.5	20.0	23.5	--	--	18.5
	11	20.5	26.0	--	--	--	21.0	28.0	--	--	20.0
	12	22.5	33.0	--	--	--	22.0	33.0	--	--	21.5
GROUNDWATER ELEVATION BELOW PILE TIP	< 6	7.5	3.0	8.0	8.0	8.0	11.0	10.0	9.5	9.5	9.5
	7	8.5	4.5	9.5	9.5	9.5	12.0	12.0	10.5	10.5	10.5
	8	10.0	6.5	10.5	10.5	10.5	12.5	14.0	11.5	11.5	11.5
	9	11.0	9.5	--	12.0	12.0	13.5	16.5	--	12.5	12.5
	10	12.5	13.0	--	--	13.5	14.0	19.5	--	13.5	13.5
	11	13.5	17.0	--	--	14.5	15.0	22.5	--	--	14.5
	12	15.0	21.5	--	--	16.0	16.0	25.5	--	--	15.5

MINIMUM REQUIRED EMBEDMENT AND SECTION MODULUS

*DO NOT USE H-PILES WITH TIMBER LAGGING FOR GROUNDWATER CONDITION, SHORING HEIGHT AND H-PILE SIZE SHOWN IF MINIMUM REQUIRED EMBEDMENT IS "--".

NOTES:

1. AT THE CONTRACTOR'S OPTION, USE STANDARD TEMPORARY SHORING AS NOTED IN THE PLANS.
2. FOR STANDARD TEMPORARY SHORING, SEE STANDARD SHORING PROVISION.
3. STANDARD TEMPORARY SHORING IS BASED ON THE FOLLOWING IN-SITU ASSUMED SOIL PARAMETERS:
   UNIT WEIGHT, γ = 120 PCF
   FRICTION ANGLE, ϕ = 30 DEGREES
   COHESION, c = 0 PSF
4. DO NOT USE STANDARD TEMPORARY SHORING IF ASSUMED SOIL PARAMETERS ARE NOT APPLICABLE.
5. DO NOT USE STANDARD TEMPORARY SHORING WHEN VERY LOOSE OR SOFT SOIL OR MUCK IS WITHIN THE EMBEDMENT DEPTH.
6. USE GROUNDWATER ELEVATION NOTED IN THE PLANS. IF NO GROUNDWATER ELEVATION IS SHOWN IN THE PLANS, USE "GROUNDWATER ELEVATION BETWEEN BOTTOM OF SHORING AND PILE TIP" FOR GROUNDWATER CONDITION. DO NOT USE STANDARD TEMPORARY SHORING IF GROUNDWATER IS ABOVE BOTTOM OF SHORING.
7. AT THE CONTRACTOR'S OPTION OR IF AVAILABLE CLEAR DISTANCE IS LESS THAN THE MINIMUM REQUIRED FOR CONCRETE BARRIER, SET BARRIER NEXT TO AND UP AGAINST TRAFFIC SIDE OF PILES AND USE "SURCHARGE CASE WITH TRAFFIC IMPACT".
8. AT THE CONTRACTOR'S OPTION OR IF AVAILABLE CLEAR DISTANCE IS LESS THAN 4' FOR TEMPORARY GUARDRAIL, ATTACH GUARDRAIL TO TRAFFIC SIDE OF PILES AS SHOWN IN THE PLANS AND USE "SURCHARGE CASE WITH TRAFFIC IMPACT".
9. MINIMUM REQUIRED EXTENSION IS 6" FOR "SLOPE OR SURCHARGE CASE WITH NO TRAFFIC IMPACT" AND 32" FOR "SURCHARGE CASE WITH TRAFFIC IMPACT".
10. MINIMUM REQUIRED EMBEDMENT FOR H-PILES WITH TIMBER LAGGING IS BASED ON DRIVEN H-PILES AT MAXIMUM 6' SPACING. AT THE CONTRACTOR'S OPTION, EMBEDMENT DEPTHS MAY BE REDUCED BY 25% FOR DRILLED-IN H-PILES.
11. SUBMIT A "STANDARD TEMPORARY SHORING SELECTION FORM" AT LEAST 7 DAYS BEFORE STARTING TEMPORARY SHORING CONSTRUCTION. UP TO 3 SHORING LOCATIONS MAY BE INCLUDED ON EACH FORM. STANDARD SHORING SELECTION FORMS ARE AVAILABLE FROM: connect.ncdot.gov/resources/Geological/Pages/Geotech_Forms_Details.aspx
12. CONTACT THE ENGINEER IF PILES DO NOT ATTAIN THE MINIMUM REQUIRED EMBEDMENT.

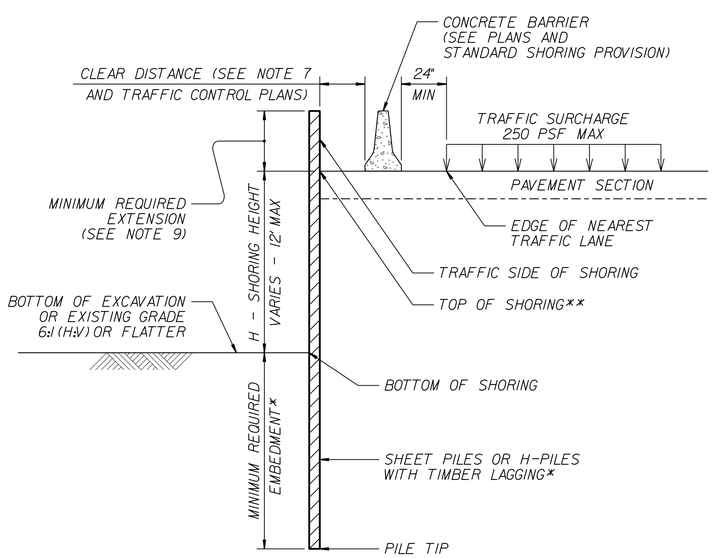

CONCRETE BARRIER

**TOP OF SHORING = EDGE OF PAVEMENT

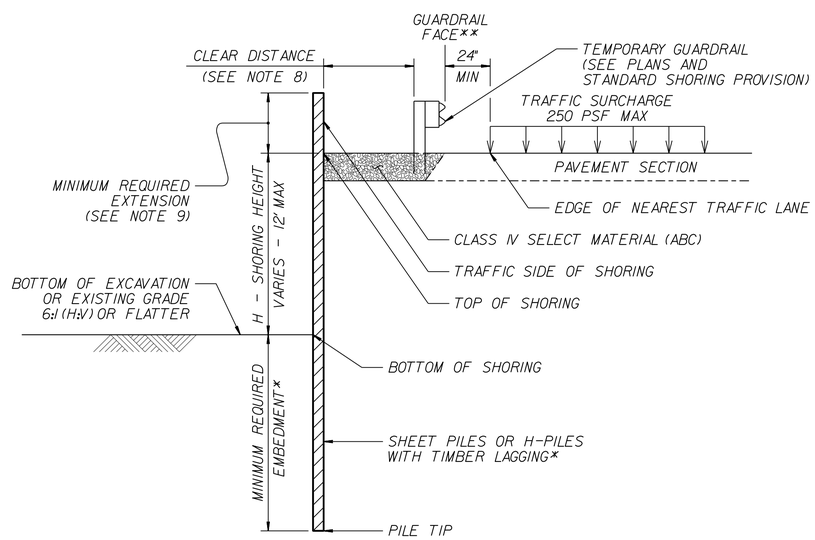

TEMPORARY GUARDRAIL

**GUARDRAIL FACE = EDGE OF PAVEMENT

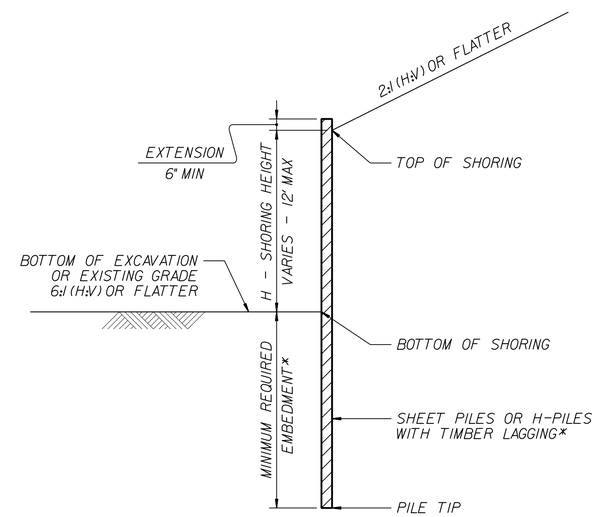

STANDARD TEMPORARY SHORING

(SLOPE CASE)
*SEE TABLE ABOVE.

STANDARD TEMPORARY SHORING

(SURCHARGE CASE)
*SEE TABLE ABOVE.

NORTH CAROLINA DEPARTMENT OF TRANSPORTATION DIVISION OF HIGHWAYS

GEOTECHNICAL ENGINEERING UNIT

STANDARD DETAIL NO. 1801.01

STANDARD TEMPORARY SHORING

DATE: 11-19-13

PROJECT REFERENCE NO.	SHEET NO.
R-2530B	2G-4

GEOTECHNICAL ENGINEER

NORTH CAROLINA PROFESSIONAL SEAL 022246 ENGINEER SCOTT A. HIDDEN

DocuSigned by: Scott A. Hidden 10/22/2018
F780CAEE9C7B4F... SIGNATURE DATE

ENGINEER

SIGNATURE DATE

DOCUMENT NOT CONSIDERED FINAL UNLESS ALL SIGNATURES COMPLETED

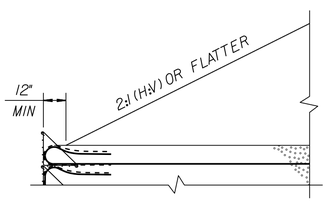

SLOPE CASE

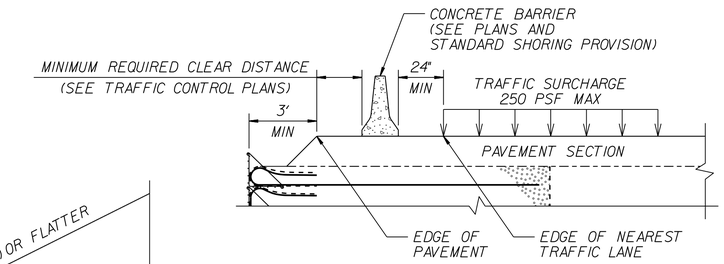

SURCHARGE CASE

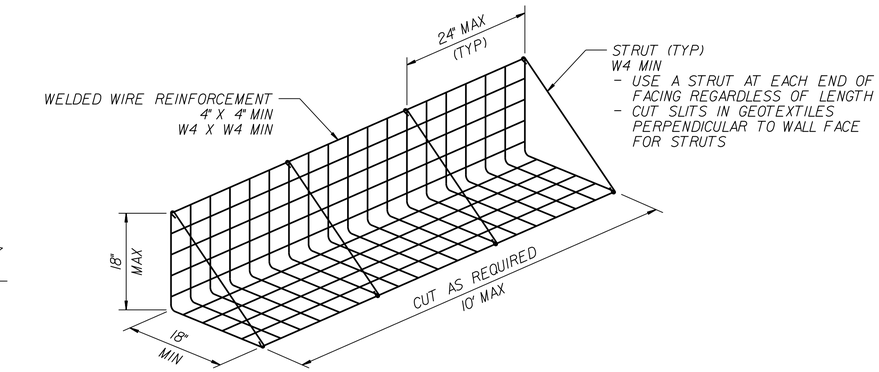

FACING DETAIL

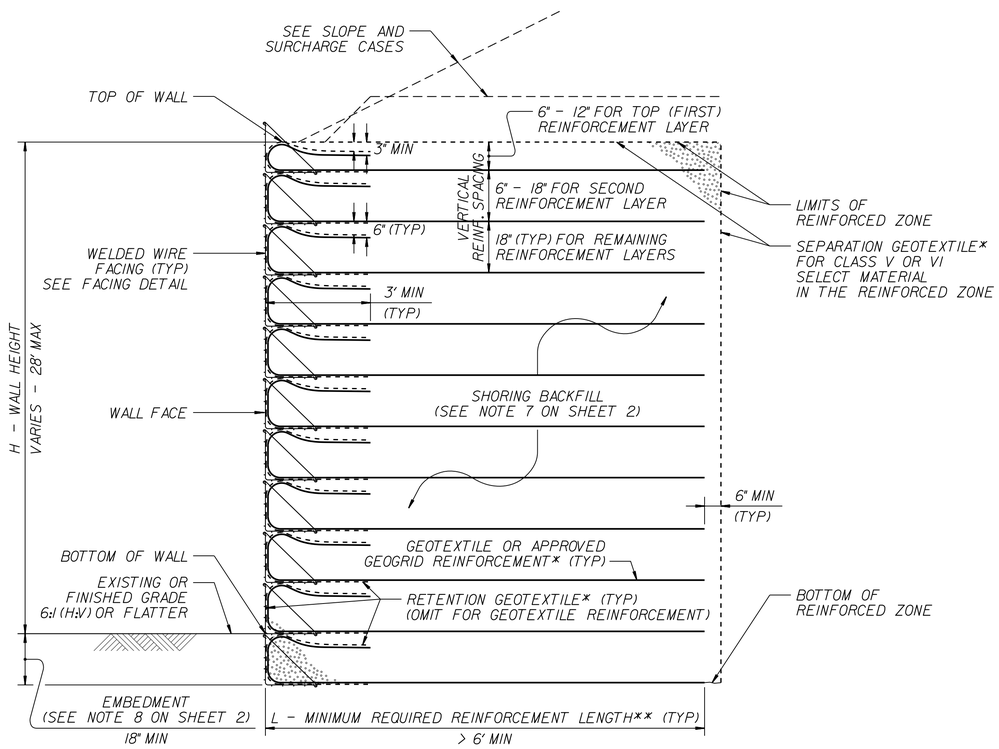

STANDARD TEMPORARY WALL

(FOR STANDARD TEMPORARY WALLS ON STRUCTURES, SEE TEMPORARY WALL ON STRUCTURE DETAIL ON SHEET 2.)
*SEE GEOSYNTHETIC PLACEMENT DETAILS ON SHEET 2.
**SEE REINFORCEMENT TABLES ON SHEET 3.

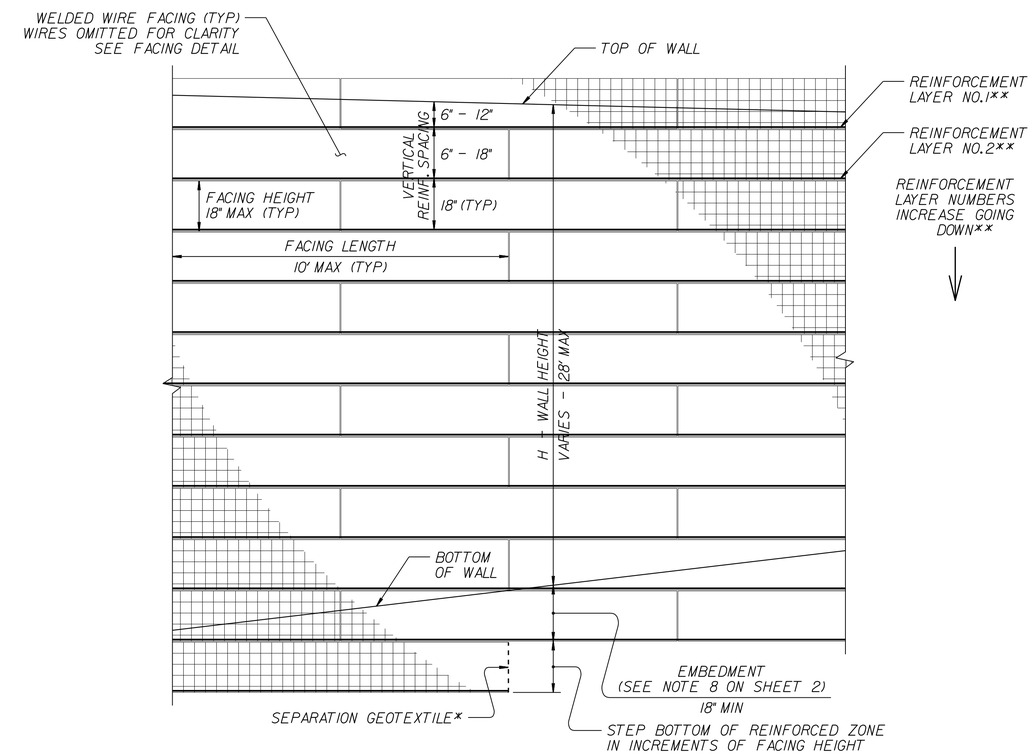

STANDARD TEMPORARY WALL – PARTIAL ELEVATION

*SEE GEOSYNTHETIC PLACEMENT DETAILS ON SHEET 2.
**SEE REINFORCEMENT TABLES ON SHEET 3.

STATE OF NORTH CAROLINA DEPARTMENT OF TRANSPORTATION

NORTH CAROLINA DEPARTMENT OF TRANSPORTATION DIVISION OF HIGHWAYS

GEOTECHNICAL ENGINEERING UNIT

STANDARD DETAIL NO. 1801.02

STANDARD TEMPORARY WALL SHEET 1 OF 3

DATE: 11-19-13

PROJECT REFERENCE NO.	SHEET NO.
R-2530B	2G-5

GEOTECHNICAL ENGINEER

NORTH CAROLINA PROFESSIONAL SEAL 022246 ENGINEER SCOTT A. HIDDEN

DocuSigned by: Scott A. Hidden 10/22/2018
F760CAE8BDEC4B... SIGNATURE DATE

ENGINEER

SIGNATURE DATE

DOCUMENT NOT CONSIDERED FINAL UNLESS ALL SIGNATURES COMPLETED

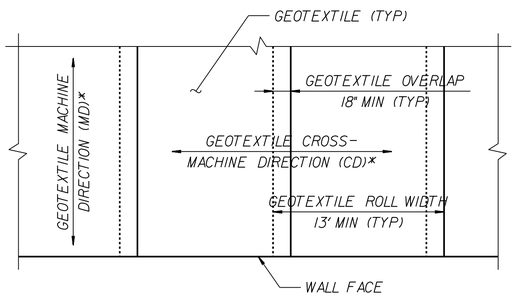

GEOTEXTILE PLACEMENT

(100% COVERAGE MIN FOR GEOTEXTILE REINFORCEMENT)

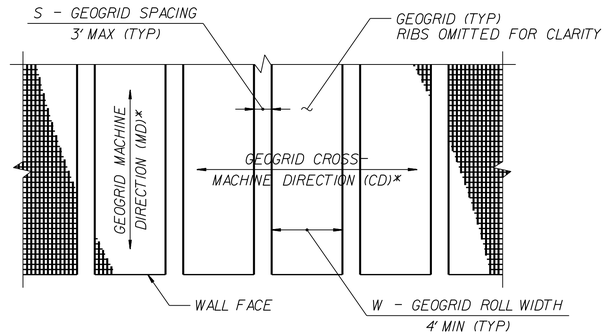

GEOGRID PLACEMENT

(80% COVERAGE MIN FOR GEOGRID REINFORCEMENT – $\frac{W}{W+S} \times 100 \geq 80\%$, SEE NOTE 11)

GEOSYNTHETIC PLACEMENT DETAILS

(PLAN VIEW)

*SEE NOTE 12.

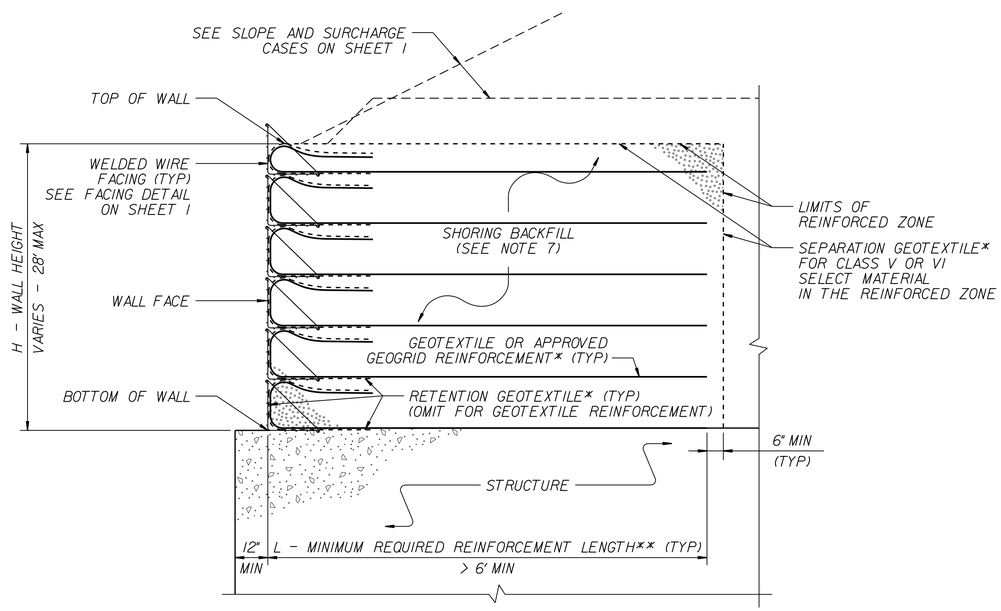

TEMPORARY WALL ON STRUCTURE DETAIL

*SEE GEOSYNTHETIC PLACEMENT DETAILS.

**SEE REINFORCEMENT TABLES ON SHEET 3.

NOTES:

1. AT THE CONTRACTOR'S OPTION, USE STANDARD TEMPORARY WALLS AS NOTED IN THE PLANS.
2. FOR STANDARD TEMPORARY WALLS, SEE STANDARD SHORING PROVISION.
3. STANDARD TEMPORARY WALLS ARE BASED ON THE FOLLOWING IN-SITU ASSUMED SOIL PARAMETERS:
   UNIT WEIGHT, γ = 120 PCF
   FRICTION ANGLE, ϕ = 30 DEGREES
   COHESION, c = 0 PSF
4. DO NOT USE STANDARD TEMPORARY WALLS IF ASSUMED SOIL PARAMETERS ARE NOT APPLICABLE.
5. DO NOT USE STANDARD TEMPORARY WALLS WHEN VERY LOOSE OR SOFT SOIL OR MUCK IS BELOW TEMPORARY WALLS.
6. USE GROUNDWATER ELEVATION NOTED IN THE PLANS. IF NO GROUNDWATER ELEVATION IS SHOWN IN THE PLANS, ASSUME GROUNDWATER DEPTH IS LESS THAN 7' BELOW BOTTOM OF REINFORCED ZONE. DO NOT USE STANDARD TEMPORARY WALLS IF GROUNDWATER IS ABOVE BOTTOM OF REINFORCED ZONE.
7. DO NOT USE A-2-4 SOIL FOR STANDARD TEMPORARY WALLS AROUND CULVERTS OR IN THE REINFORCED ZONE OF STANDARD TEMPORARY WALLS FOR SLOPE CASES. DO NOT USE CLASS VI SELECT MATERIAL IN THE REINFORCED ZONE OF STANDARD TEMPORARY WALLS WITH GEOTEXTILE REINFORCEMENT.
8. EMBEDMENT IS NOT REQUIRED FOR STANDARD TEMPORARY WALLS ON STRUCTURES OR ROCK AS DETERMINED BY THE ENGINEER.
9. DO NOT USE MORE THAN 4 DIFFERENT REINFORCEMENT STRENGTHS FOR EACH STANDARD TEMPORARY WALL.
10. GEOGRIDS ARE TYPICALLY APPROVED FOR ULTIMATE TENSILE STRENGTHS IN THE MACHINE DIRECTION (MD) AND CROSS-MACHINE DIRECTION (CD) OR SHORT-TERM DESIGN STRENGTHS FOR A 3-YEAR DESIGN LIFE IN THE MD BASED ON MATERIAL TYPE. THE LIST OF APPROVED GEOGRIDS WITH DESIGN STRENGTHS IS AVAILABLE FROM:
    connect.ncdot.gov/resources/Materials/Pages/Materials-Manual-by-Manual.aspx
    DEFINE MATERIAL TYPE FROM THE WEBSITE ABOVE FOR SHORING BACKFILL AS FOLLOWS:

MATERIAL TYPE	SHORING BACKFILL
BORROW	A-2-4 SOIL
FINE AGGREGATE	CLASS II, TYPE I OR CLASS III SELECT MATERIAL
COARSE AGGREGATE	CLASS V OR VI SELECT MATERIAL

    IF THE WEBSITE DOES NOT LIST A SHORT-TERM DESIGN STRENGTH FOR AN APPROVED GEOGRID, USE A SHORT-TERM DESIGN STRENGTH EQUAL TO THE ULTIMATE TENSILE STRENGTH DIVIDED BY 3.5 FOR THE GEOGRID REINFORCEMENT.
11. FOR GEOGRID REINFORCEMENT WITH LESS THAN 100% COVERAGE, STAGGER REINFORCEMENT SO GEOGRIDS ARE CENTERED OVER GAPS IN THE REINFORCEMENT LAYER BELOW.
12. AT THE CONTRACTOR'S OPTION, REINFORCEMENT MAY BE INSTALLED WITH THE MD PARALLEL TO THE WALL FACE IF BOTH OF THE FOLLOWING CONDITIONS OCCUR:
    - W (REINFORCEMENT ROLL WIDTH) ≥ (MINIMUM REQUIRED REINFORCEMENT LENGTH) + 4.5' AND
    - REINFORCEMENT STRENGTH IN CD ≥ MINIMUM REQUIRED REINFORCEMENT STRENGTH IN MD.
13. SUBMIT A "STANDARD TEMPORARY WALL SELECTION FORM" AT LEAST 7 DAYS BEFORE STARTING TEMPORARY WALL CONSTRUCTION. STANDARD SHORING SELECTION FORMS ARE AVAILABLE FROM:
    connect.ncdot.gov/resources/Geological/Pages/Geotech_Forms_Details.aspx
14. DO NOT PLACE SHORING BACKFILL OR REINFORCEMENT UNTIL EXCAVATION DIMENSIONS AND FOUNDATION MATERIAL ARE APPROVED.
15. FOR STANDARD TEMPORARY WALLS WITH PILE FOUNDATIONS IN THE REINFORCED ZONE, DRIVE PILES THROUGH REINFORCEMENT AFTER CONSTRUCTING TEMPORARY WALLS.
16. DO NOT SPLICE OR OVERLAP REINFORCEMENT SO SEAMS ARE PARALLEL TO THE WALL FACE.
17. CONTACT THE ENGINEER WHEN EXISTING OR FUTURE OBSTRUCTIONS SUCH AS FOUNDATIONS, PAVEMENTS, PIPES, INLETS OR UTILITIES WILL INTERFERE WITH REINFORCEMENT.
18. FOR STANDARD TEMPORARY WALLS WITH INTERIOR ANGLES LESS THAN 90 DEGREES, WRAP GEOSYNTHETICS AT ACUTE CORNERS AS DIRECTED BY THE ENGINEER.
19. FOR STANDARD TEMPORARY WALLS WITH TOP OF WALL WITHIN 5' OF FINISHED GRADE, REMOVE TOP FACING AND INCORPORATE TOP REINFORCEMENT LAYER INTO FILL WHEN PLACING FILL IN FRONT OF WALL.

STATE OF NORTH CAROLINA DEPARTMENT OF TRANSPORTATION

NORTH CAROLINA DEPARTMENT OF TRANSPORTATION
DIVISION OF HIGHWAYS

GEOTECHNICAL ENGINEERING UNIT

STANDARD DETAIL NO. 1801.02

STANDARD TEMPORARY WALL
SHEET 2 OF 3

DATE: 11-19-13

PROJECT REFERENCE NO.	SHEET NO.
R-2530B	2G-6

GEOTECHNICAL ENGINEER

NORTH CAROLINA PROFESSIONAL SEAL 022246 ENGINEER SCOTT A. HIDDEN

DocuSigned by: Scott A. Hidden 10/22/2018
F760CAE89E5C4DD...
SIGNATURE DATE

ENGINEER

SIGNATURE DATE

DOCUMENT NOT CONSIDERED FINAL UNLESS ALL SIGNATURES COMPLETED

SLOPE OR SURCHARGE CASE	GROUNDWATER DEPTH BELOW BOTTOM OF REINFORCED ZONE (SEE NOTE 6 ON SHEET 2) (FT)	SHORING BACKFILL TYPE IN THE REINFORCED ZONE (SEE NOTE 7 ON SHEET 2)	H - WALL HEIGHT (FT)																								
			< 4	5	6	7	8	9	10	11	12	13	14	15	16	17	18	19	20	21	22	23	24	25	26	27	28
SLOPE CASE	> 0	CLASS II,TYPE I, CLASS III,CLASS V OR CLASS VI SELECT MATERIAL	6	6	7	8	9	11	12	13	13	14	15	16	17	18	19	20	21	22	23	24	24	25	26	27	27
SURCHARGE CASE	> 0 TO 7 FOR H < 20′ > 0 TO 10 FOR H ≥ 20′	ALL SHORING BACKFILL TYPES	6	7	7	8	8	9	9	10	11	11	12	12	13	14	14	15	16	17	17	18	19	19	20	21	22
	> 7 FOR H < 20′ > 10 FOR H ≥ 20′	A-2-4 SOIL	6	6	7	8	8	9	9	10	11	11	12	12	13	14	14	15	16	16	17	18	18	19	20	20	21
		CLASS II,TYPE I OR CLASS III SELECT MATERIAL	6	6	7	7	8	8	9	10	10	11	11	12	12	13	14	15	15	16	16	17	17	18	18	19	20
		CLASS V OR CLASS VI SELECT MATERIAL	6	6	7	7	7	8	8	9	9	10	10	11	12	13	13	14	14	15	15	16	17	17	18	19	19

L – MINIMUM REQUIRED REINFORCEMENT LENGTH (FT)

(FOR ALL REINFORCEMENT TYPES)

WALL HEIGHT (H) + EMBEDMENT (FT)	NUMBER OF REINFORCEMENT LAYERS*
2.5 - 4	3
4 - 5.5	4
5.5 - 7	5
7 - 8.5	6
8.5 - 10	7
10 - 11.5	8
11.5 - 13	9
13 - 14.5	10
14.5 - 16	11
16 - 17.5	12
17.5 - 19	13
19 - 20.5	14
20.5 - 22	15
22 - 23.5	16
23.5 - 25	17
25 - 26.5	18
26.5 - 28	19
28 - 29.5	20

*BASED ON VERTICAL REINFORCEMENT SPACING SHOWN ON SHEET 1.

REINFORCEMENT LAYER NUMBER*	SHORING BACKFILL TYPE IN THE REINFORCED ZONE (SEE NOTE 7 ON SHEET 2)				
	SLOPE CASE		SURCHARGE CASE		
	CLASS II,TYPE I OR CLASS III SELECT MATERIAL	CLASS V SELECT MATERIAL	A-2-4 SOIL	CLASS II,TYPE I OR CLASS III SELECT MATERIAL	CLASS V SELECT MATERIAL
1	2400	2400	2400	2400	2400
2	2400	2400	2400	2400	2400
3	2400	2400	2400	2400	2400
4	2400	2400	2500	2400	2400
5	2500	2400	3000	2400	2400
6	3000	2400	3500	2800	2400
7	3500	2700	4000	3200	2600
8	4000	3100	4500	3600	2900
9	4500	3500	5000	4000	3200
10	5000	3900	5500	4400	3500
11	5500	4300	6000	4800	3800
12	6000	4700	6500	5200	4100
13	6500	5100	7000	5600	4400
14	7000	5400	7500	6000	4700
15	7500	5800	8000	6400	5000
16	8000	6200	8500	6800	5300
17	8500	6600	9000	7200	5600
18	9000	7000	9500	7600	5900
19	9500	7400	10000	8000	6200
20	10000	7800	10500	8400	6500

GEOTEXTILE REINFORCEMENT
ULTIMATE TENSILE STRENGTH (LB/FT)

REINFORCEMENT LAYER NUMBER*	SHORING BACKFILL TYPE IN THE REINFORCED ZONE (SEE NOTE 7 ON SHEET 2)				
	SLOPE CASE		SURCHARGE CASE		
	CLASS II,TYPE I OR CLASS III SELECT MATERIAL	CLASS V OR CLASS VI SELECT MATERIAL	A-2-4 SOIL	CLASS II,TYPE I OR CLASS III SELECT MATERIAL	CLASS V OR CLASS VI SELECT MATERIAL
1	240	200	340	290	240
2	380	310	520	430	350
3	530	420	700	570	460
4	690	550	870	720	570
5	860	690	1050	860	680
6	1030	830	1220	1000	790
7	1200	970	1400	1150	900
8	1370	1110	1580	1290	1010
9	1550	1240	1750	1430	1120
10	1720	1380	1930	1580	1230
11	1890	1520	2100	1720	1340
12	2060	1660	2280	1860	1450
13	2240	1800	2450	2010	1560
14	2410	1940	2630	2150	1670
15	2580	2080	2800	2290	1780
16	2750	2220	2980	2440	1890
17	2930	2360	3160	2580	2000
18	3100	2500	3330	2720	2110
19	3270	2640	3510	2860	2220
20	3440	2780	3690	3000	2330

GEOGRID REINFORCEMENT
SHORT–TERM DESIGN STRENGTH (LB/FT)
(SEE NOTE 10 ON SHEET 2.)

MINIMUM REQUIRED REINFORCEMENT STRENGTH IN MD
(SEE NOTE 9 ON SHEET 2.)
*SEE PARTIAL ELEVATION ON SHEET 1
FOR REINFORCEMENT LAYER NUMBERING.

STATE OF NORTH CAROLINA DEPARTMENT OF TRANSPORTATION

NORTH CAROLINA
DEPARTMENT OF TRANSPORTATION
DIVISION OF HIGHWAYS

GEOTECHNICAL ENGINEERING UNIT

STANDARD DETAIL NO. 1801.02

STANDARD
TEMPORARY WALL
SHEET 3 OF 3

DATE: 11-19-13

PROJECT REFERENCE NO.	SHEET NO.
R-2530B	2G-7

GEOTECHNICAL ENGINEER

NORTH CAROLINA PROFESSIONAL SEAL 022246 ENGINEER SCOTT A. HIDDEN

DocuSigned by: Scott A. Hidden 10/22/2018
F780CA4B9EC4D... SIGNATURE DATE

ENGINEER

SIGNATURE DATE

DOCUMENT NOT CONSIDERED FINAL UNLESS ALL SIGNATURES COMPLETED

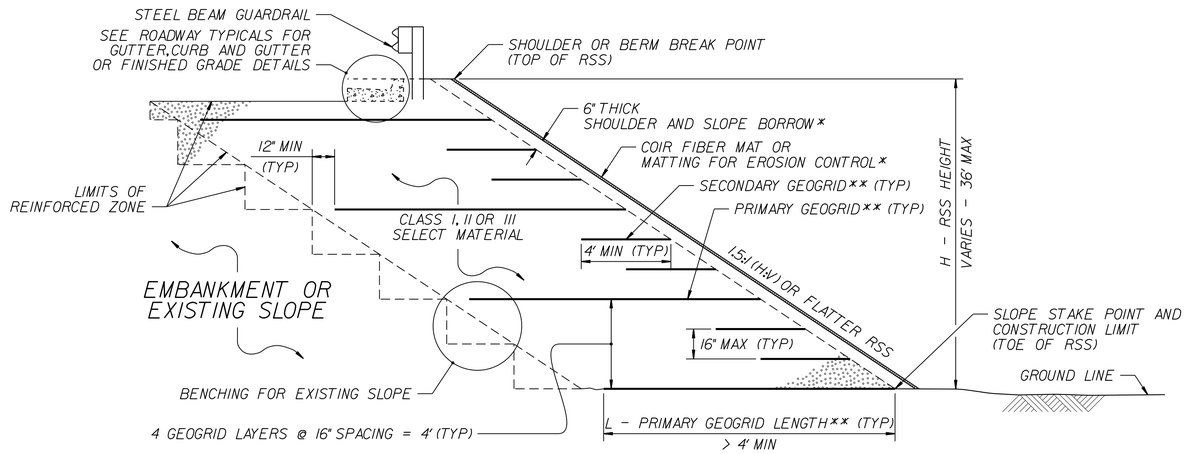

MATTING WITH SHOULDER AND SLOPE BORROW

*SEE NOTES 3 AND 11 ON SHEET 2.

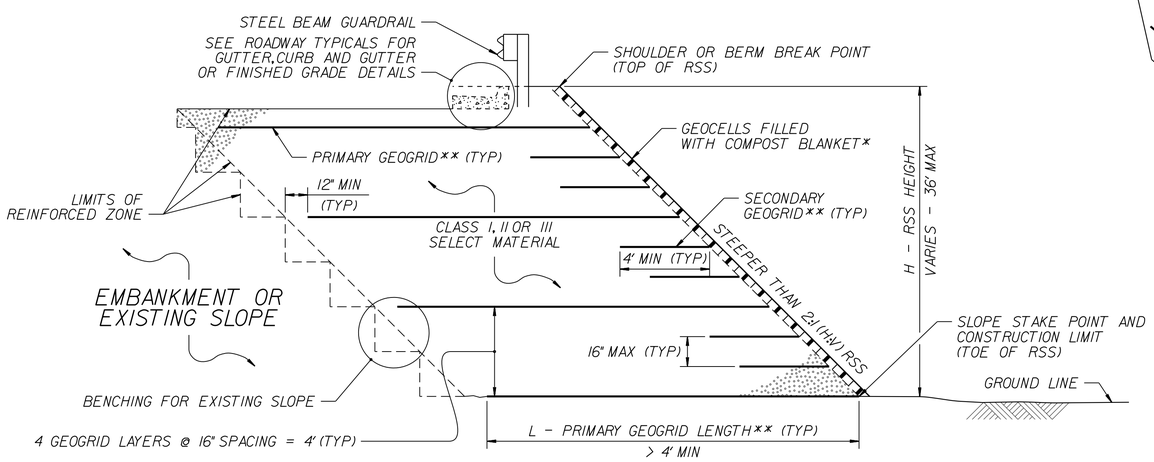

GEOCELLS WITH COMPOST BLANKET

*SEE NOTES 3 AND 11 ON SHEET 2.

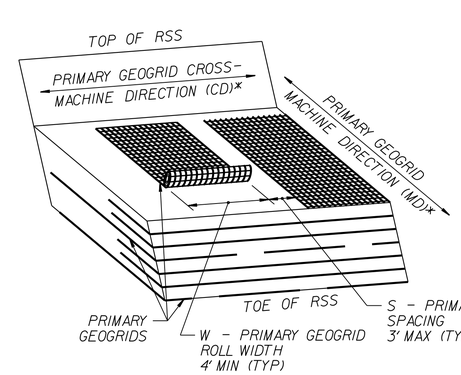

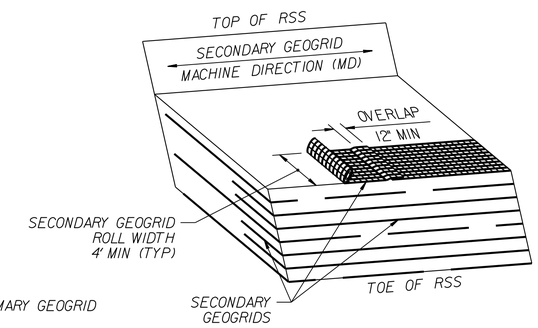

GEOGRID PLACEMENT DETAILS

(% COVERAGE = $\frac{W}{W+S}$ x 100 $\geq$ 75%)

*SEE NOTES 8 AND 9 ON SHEET 2.

STANDARD REINFORCED SOIL SLOPE (RSS)

**SEE TABLES ON SHEET 2 AND GEOGRID PLACEMENT DETAILS.

NORTH CAROLINA DEPARTMENT OF TRANSPORTATION
DIVISION OF HIGHWAYS

GEOTECHNICAL ENGINEERING UNIT

STANDARD DETAIL NO. 1802.01

STANDARD REINFORCED SOIL SLOPE (RSS) WITH HIGH GROUNDWATER
SHEET 1 OF 2

DATE: 4-19-16

PROJECT REFERENCE NO.	SHEET NO.
R-2530B	2G-8

GEOTECHNICAL ENGINEER

NORTH CAROLINA PROFESSIONAL SEAL 022246 ENGINEER SCOTT A. HIDDEN

DocuSigned by: Scott A. Hidden 10/22/2018
F760CAFB9EC4D8... SIGNATURE DATE

ENGINEER

SIGNATURE DATE

DOCUMENT NOT CONSIDERED FINAL UNLESS ALL SIGNATURES COMPLETED

GEOGRID TYPE, DIRECTION	H (FT)	0 - < 12		12 - 24		> 24 - 36	
	SELECT MATERIAL CLASS	I	II OR III	I	II OR III	I	II OR III
PRIMARY GEOGRID, MD (SUBSTITUTE SECONDARY GEOGRID FOR PRIMARY GEOGRID FOR 2:1 (H:V) OR FLATTER RSS)	1:1 TO < 1.5:1 (H:V) RSS	900	500	1200	900	1800	1200
	1.5:1 TO 1.75:1 (H:V) RSS	500	500	900	500	1400	1000
	> 1.75:1 TO < 2:1 (H:V) RSS	500	500	600	500	1000	800
SECONDARY GEOGRID, CD	1:1 (H:V) OR FLATTER RSS	185					

LTDS – MINIMUM REQUIRED LONG-TERM DESIGN STRENGTH (LB/FT)

(LTDS IS BASED ON 100% COVERAGE FOR PRIMARY GEOGRID. SEE NOTE 9 FOR LESS THAN 100% COVERAGE.)

NOTES:

1. SEE EROSION CONTROL AND ROADWAY PLANS AND SUMMARY SHEETS FOR REINFORCED SOIL SLOPE (RSS) AND SLOPE EROSION CONTROL LOCATIONS.

2. FOR STANDARD REINFORCED SOIL SLOPES, SEE REINFORCED SOIL SLOPES PROVISION. FOR STEEL BEAM GUARDRAIL, SEE SECTION 862 OF THE STANDARD SPECIFICATIONS.

3. FOR SHOULDER AND SLOPE BORROW, SEE ARTICLE 1019-2 OF THE STANDARD SPECIFICATIONS. FOR GEOCELLS, SEE CELLULAR CONFINEMENT SYSTEMS PROVISION. FOR COIR FIBER MAT, MATTING FOR EROSION CONTROL AND COMPOST BLANKET, SEE EROSION CONTROL PROVISIONS, SECTION 1631 OF THE STANDARD SPECIFICATIONS AND ROADWAY STANDARD DRAWING NO. 1631.01.

4. STANDARD RSS ARE BASED ON THE FOLLOWING IN-SITU ASSUMED SOIL PARAMETERS:
   UNIT WEIGHT, γ = 120 PCF
   FRICTION ANGLE, ϕ = 30 DEGREES
   COHESION, c = 0 PSF

5. DO NOT USE STANDARD RSS IF ASSUMED SOIL PARAMETERS ARE NOT APPLICABLE OR GROUNDWATER IS ABOVE TOE OF RSS.

6. DO NOT USE STANDARD RSS WHEN VERY LOOSE OR SOFT SOIL OR MUCK IS BELOW RSS.

7. GEOGRIDS ARE TYPICALLY APPROVED FOR ULTIMATE TENSILE STRENGTHS IN THE MACHINE DIRECTION (MD) AND CROSS-MACHINE DIRECTION (CD) OR LONG-TERM DESIGN STRENGTHS FOR A 75-YEAR DESIGN LIFE IN THE MD BASED ON MATERIAL TYPE. THE LIST OF APPROVED GEOGRIDS WITH DESIGN STRENGTHS IS AVAILABLE FROM:
   connect.ncdot.gov/resources/Materials/Pages/Materials-Manual-by-Material.aspx
   DEFINE MATERIAL TYPE FROM THE WEBSITE ABOVE FOR SELECT MATERIAL AS FOLLOWS:

MATERIAL TYPE	SELECT MATERIAL
BORROW	CLASS I SELECT MATERIAL
FINE AGGREGATE	CLASS II OR III SELECT MATERIAL

   IF THE WEBSITE DOES NOT LIST A LONG-TERM DESIGN STRENGTH FOR AN APPROVED GEOGRID IN THE MD, DO NOT USE THE GEOGRID FOR PRIMARY GEOGRID. IF THE WEBSITE DOES NOT LIST A LONG-TERM DESIGN STRENGTH FOR AN APPROVED GEOGRID IN THE CD, USE A LONG-TERM DESIGN STRENGTH EQUAL TO THE ULTIMATE TENSILE STRENGTH DIVIDED BY 7 FOR THE SECONDARY GEOGRID.

8. DO NOT OVERLAP PRIMARY GEOGRIDS IN THE MD SO OVERLAPS ARE PARALLEL TO THE TOE OF RSS. POLYOLEFIN (e.g., HDPE OR PP) GEOGRIDS MAY BE SPLICED ONCE PER PRIMARY GEOGRID LENGTH IN ACCORDANCE WITH THE GEOGRID MANUFACTURER'S INSTRUCTIONS. USE POLYOLEFIN GEOGRID PIECES AT LEAST 4' LONG. DO NOT SPLICE POLYESTER TYPE (PET) GEOGRIDS.

9. FOR PRIMARY GEOGRIDS WITH 100% COVERAGE, PLACE PRIMARY GEOGRIDS SO GEOGRIDS ARE ADJACENT TO EACH OTHER IN THE CD. FOR PRIMARY GEOGRIDS WITH 75% TO LESS THAN 100% COVERAGE,

   MINIMUM REQUIRED LONG-TERM DESIGN STRENGTH = LTDS BASED ON 100% COVERAGE x (W + S) / W

   SEE TABLE FOR LTDS BASED ON 100% COVERAGE AND GEOGRID PLACEMENT DETAILS FOR PRIMARY GEOGRID ROLL WIDTH (W) AND SPACING (S). FOR PRIMARY GEOGRIDS WITH LESS THAN 100% COVERAGE, STAGGER PRIMARY GEOGRIDS SO GEOGRIDS ARE CENTERED OVER GAPS IN THE PRIMARY GEOGRID LAYER BELOW. DO NOT USE LESS THAN 75% COVERAGE FOR PRIMARY GEOGRIDS.

10. DO NOT PLACE ANY GEOGRIDS UNTIL EXCAVATION DIMENSIONS AND IN-SITU MATERIAL ARE APPROVED.

11. FOR SLOPE EROSION CONTROL, USE GEOCELLS OR MATTING ON SLOPE FACES OF RSS AS FOLLOWS:

RSS ANGLE	SLOPE EROSION CONTROL
1:1 TO < 1.5:1 (H:V)	GEOCELLS WITH COMPOST BLANKET
1.5:1 TO < 2:1 (H:V)	GEOCELLS WITH COMPOST BLANKET OR COIR FIBER MAT WITH SHOULDER AND SLOPE BORROW*
2:1 (H:V) OR FLATTER	MATTING FOR EROSION CONTROL WITH SHOULDER AND SLOPE BORROW

*SEE REINFORCED SOIL SLOPES AND SLOPE EROSION CONTROL SUMMARY TABLE IN THE ROADWAY SUMMARY SHEETS FOR SLOPE EROSION CONTROL ON SLOPE FACES OF RSS 1.5:1 (H:V) TO STEEPER THAN 2:1.

H (FT)	0 - < 12		12 - 24		> 24 - 36	
SELECT MATERIAL CLASS	I	II OR III	I	II OR III	I	II OR III
1:1 TO < 1.5:1 (H:V) RSS	1.25	1.20	1.15	1.10	1.10	1.00
1.5:1 TO 1.75:1 (H:V) RSS	1.10	1.00	0.95	0.90	0.90	0.85
> 1.75:1 TO < 2:1 (H:V) RSS	1.00	0.85	0.80	0.75	0.75	0.70

L/H RATIO (L > 4' MIN)

(IF L ≤ 4', USE SECONDARY GEOGRID INSTEAD OF PRIMARY GEOGRID.)

STATE OF NORTH CAROLINA DEPARTMENT OF TRANSPORTATION

NORTH CAROLINA DEPARTMENT OF TRANSPORTATION DIVISION OF HIGHWAYS

GEOTECHNICAL ENGINEERING UNIT

STANDARD DETAIL NO. 1802.01

STANDARD REINFORCED SOIL SLOPE (RSS) WITH HIGH GROUNDWATER SHEET 2 OF 2

DATE: 4-19-16

COMPUTED BY: RSH DATE: 12/12/2018
CHECKED BY: JWM DATE: 12/13/2018

PROJECT REFERENCE NO.	SHEET NO.
R-2530B	3B-1

Kimley»Horn ©2018
421 FAYETTEVILLE STREET, SUITE 600
RALEIGH, NC 27601

SUMMARY OF EARTHWORK

IN CUBIC YARDS

LOCATION	UNCLASSIFIED EXCAVATION	UNDERCUT EXCAVATION	EMBANKMENT +%	BORROW	TOTAL WASTE
SECTION 1					
-L- 19+61.00 TO 24+50.00 (LT)	261		565	304	
-L- 24+50.00 TO 44+30.00 (RT)	3515		2999		516
-L- 29+75.00 TO 34+63.00 (MED)	86		512	426	
-RBT- 10+00.00 TO 13+01.59	174		841	667	
-Y1- 9+00.00 TO 19+71.11 (RT)	221		3252	3031	
-Y1- 20+45.83 TO 28+90.00 (LT)	126		2923	2797	
-Y2- 12+85.00 TO 30+50.00	618		3964	3346	
-Y2- 30+50.00 TO 32+20.38 (RT)	17		150	133	
-Y2A- 10+90.05 TO 17+20.00	659		886	227	
-DRW1- 10+40.44 TO 10+75.00	164				164
-L- 32+25.00 TO 44+30.00 (TEMP)	354		814	460	
-RBT- 10+00.00 TO 13+01.59 (TEMP)	43		290	247	
SUBTOTAL (SECTION 1)	6238		17196	11638	680
SECTION 2					
-L- 44+30.00 TO 68+85.00 (RT)	493		18030	17537	
-DRW1A- 10+39.50 TO 11+16.00	3		391	388	
-DRW1B- 10+39.50 TO 11+11.00	2		301	299	
-DRW1C- 10+39.50 TO 10+92.00	12		270	258	
-L- 51+40.00 TO 54+70.00 (TEMP)			720	720	
SUBTOTAL (SECTION 2)	510		19712	19202	
SECTION 3					
-L- 68+85.00 TO 98+00.00 (RT)	3936		20686	16750	
-Y6- 10+37.51 TO 12+86.00	102		647	545	
-DRW2- 10+39.50 TO 10+94.00	8		142	134	
-DRW2A- 10+39.50 TO 10+92.00	12		298	286	
-DRW2B- 10+39.50 TO 10+78.00	12		76	64	
-DRW4- 10+39.50 TO 10+95.00	7		156	149	
-L- 91+60.00 TO 96+25.00 (TEMP)	103		1259	1156	
SUBTOTAL (SECTION 3)	4180		23262	19082	
SECTION 4					
-L- 105+00.00 TO 135+00.00 (LT)	35816		43335	9713	2194
-DET1- 10+50.45 TO 17+07.59	1230		1736	506	
-DRW6- 10+00.00 TO 10+69.00	292				292
-DRW7- 10+30.00 TO 11+07.00	711				711
-L- 106+50.00 TO 107+20.00 (TEMP)	11		13	2	
-L- 125+05.00 TO 125+65.00 (TEMP)	107				107
SUBTOTAL (SECTION 4)	38167		45085	10222	3304
SECTION 5					
-L- 135+00.00 TO 163+00.00 (LT)	22192		51234	29042	
-DET2- 10+49.24 TO 17+32.36	3271		24		3247
-Y8- 13+68.00 TO 17+52.93	472		1679	1207	
-L- 139+80.00 TO 144+10.00 (TEMP)	234		2226	1992	
SUBTOTAL (SECTION 5)	26169		55163	32241	3247
SECTION 6					
-L- 168+00.00 TO 198+17.00 (RT)	61091	1200	17026		45265
-Y10- 10+47.37 TO 13+04.00	723		395		328
-DRW9A- 10+51.00 TO 11+59.00	691				691
-L- 187+85.00 TO 188+85.00 (TEMP)	35				35
SUBTOTAL (SECTION 6)	62540	1200	17421		46319
SECTION 7					
-L- 198+17.00 TO 227+00.00 (RT)	35332		66594	31262	
-DRW9B- 10+57.00 TO 11+63.00	4		937	933	
-L- 201+65.69 TO 202+35.13 (TEMP)	215				215
-L- 219+15.05 TO 219+84.92 (TEMP)	2		67	65	
SUBTOTAL (SECTION 7)	35553		67598	32260	215
SECTION 8					
-L- 227+00.00 TO 245+00.00 (RT)	1353		41968	40615	
-DET3- 10+50.00 TO 18+43.36	5179		818		4361
-L- 237+73.19 TO 238+78.00 (TEMP)	39		872	833	
SUBTOTAL (SECTION 8)	6571		43658	41448	4361

LOCATION	UNCLASSIFIED EXCAVATION	UNDERCUT EXCAVATION	EMBANKMENT +%	BORROW	TOTAL WASTE
SECTION 9					
-L- 252+00.00 TO 295+00.00 (LT)	48348		25206		23142
-DRW10- 10+10.00 TO 11+29.00	2147				2147
-DRW11- 10+15.00 TO 11+04.00	1114				1114
-DRW13- 10+00.00 TO 10+79.00	246				246
-L- 268+00.00 TO 268+59.70 (TEMP)	72				72
-L- 272+05.00 TO 275+45.00 (TEMP)	28		635	607	
-L- 289+64.89 TO 290+35.11 (TEMP)	132				132
SUBTOTAL (SECTION 9)	52087		25841	607	26853
SECTION 10					
-L- 295+00.00 TO 329+15.00 (LT)	62218		94113	31895	
-Y13- 13+72.00 TO 17+10.29	621		266		355
-Y14- 11+42.00 TO 14+56.00	163		1628	1465	
-Y15- 11+30.00 TO 13+42.86	82		730	648	
-Y18- 10+05.00 TO 10+75.99	16		43	27	
-L- 314+70.00 TO 315+30.00 (TEMP)	10		110	100	
-Y14- 10+97.20 TO 11+50.00 (TEMP)	12		2		10
SUBTOTAL (SECTION 10)	63122		96893	34135	365
SECTION 11					
-L- 368+00.00 TO 387+89.60 (LT)	22254		31873	9619	
-L- 387+89.60 TO 396+23.00	11245		685		10560
-L- 364+00.00 TO 387+89.60 (RT)	3042		15503	12461	
-DRW18- 10+25.00 TO 10+99.00	387				387
-L- 373+15.00 TO 373+75.00 (TEMP)	43				43
-L- 377+90.00 TO 378+50.71 (TEMP)	47				47
-L- 380+39.50 TO 386+91.63 (TEMP)	6		5934	5928	
SUBTOTAL (SECTION 11)	37024		53996	28008	11037
SECTION 12					
-L- 329+15.00 TO 335+23.90 (LT)	1041		3361	2320	
-L- 346+97.49 TO 349+00.00 (LT)	25		1242	1217	
-DET4- 10+66.21 TO 15+80.33	186		120		66
-DET5- 10+70.91 TO 23+68.81	1311		3385	2074	
-Y16- 12+00.00 TO 16+05.00	926		1410	484	
-Y19- 10+13.68 TO 11+04.00	1		89	88	
-L- 347+15.30 TO 350+29.77 (TEMP)	79		35		44
-L- 351+18.89 TO 352+44.18 (TEMP)	37		31		6
-L- 353+10.58 TO 356+85.94 (TEMP)	143		366	223	
-L- 357+23.28 TO 359+71.36 (TEMP)	57		42		15
-Y16- 10+41.80 TO 11+74.13 (TEMP)	132				132
SUBTOTAL (SECTION 12)	3938		10081	6406	263
SECTION 13					
-L- 19+61.00 TO 24+50.00 (RT)	292		600	308	
-Y1- 9+00.00 TO 19+71.11 (LT)	269		1480	1211	
-Y1- 20+45.83 TO 28+90.00 (RT)	106		1613	1507	
-Y2- 10+35.33 TO 12+85.00	250		262	12	
SUBTOTAL (SECTION 13)	917		3954	3037	
SECTION 14					
-L- 98+00.00 TO 128+00.00 (RT)	28678		15636		13042
-DRW5- 10+43.23 TO 11+05.00	203				203
SUBTOTAL (SECTION 14)	28881		15636		13245
SECTION 15					
-L- 128+00.00 TO 168+00.00 (RT)	12722		30426	17704	
-Y8- 18+57.39 TO 27+06.00	6390		1554		4836
SUBTOTAL (SECTION 15)	19112		31980	17704	4836
SECTION 16					
-L- 347+15.30 TO 364+00.00 (RT)	2393		14356	11963	
-Y16- 10+47.00 TO 12+00.00	72		1282	1210	
-L- 348+32.77 TO 351+00.00 (TEMP)	54		53		1
-L- 354+29.89 TO 359+50.51 (TEMP)	13		776	763	
-L- 364+00.00 TO 367+20.51 (TEMP)	8		646	638	
SUBTOTAL (SECTION 16)	2540		17112	14573	1

NOTE: NCDOT GEOENVIRONMENTAL SECTION HAS DETERMINED THAT THERE MAY BE APPROXIMATELY 500 TONS OF PETROLEUM CONTAMINATED SOIL WITHIN THE PROJECT LIMITS (SEE PLANS FOR LOCATIONS). PLEASE SEE THE PROJECT SPECIAL PROVISION AND DETAIL IN THE PLANS TO DETERMINE HOW TO HANDLE THIS MATERIAL.

NOTE: THESE EARTHWORK QUANTITIES ARE BASED IN PART ON SUBSURFACE DATA PROVIDED BY THE GEOTECHNICAL ENGINEERING UNIT.

REVISIONS

5/28/99

12/13/2018

COMPUTED BY: RSH DATE: 12/3/2018
CHECKED BY: JWM DATE: 12/3/2018

PROJECT REFERENCE NO.	SHEET NO.
R-2530B	3B-2

Kimley»Horn ©2018
421 FAYETTEVILLE STREET, SUITE 600
RALEIGH, NC 27601

SUMMARY OF EARTHWORK

IN CUBIC YARDS

LOCATION	UNCLASSIFIED EXCAVATION	UNDERCUT EXCAVATION	EMBANKMENT +%	BORROW	TOTAL WASTE
SECTION 17					
-L- 24+50.00 TO 53+00.00 (LT)	1220		7286	6066	
-Y2- 30+50.00 TO 32+20.38 (LT)	28		71	43	
-L- 30+75.00 TO 31+45.00 (TEMP)	21		11		10
SUBTOTAL (SECTION 17)	1269		7368	6109	10
SECTION 18					
-L- 53+00.00 TO 83+00.00 (LT)	3905		7070	3165	
-Y3- 14+88.00 TO 16+04.90	33		130	97	
-Y4- 13+11.00 TO 14+72.00	14		139	125	
-Y5- 13+51.00 TO 13+97.64	2		61	59	
SUBTOTAL (SECTION 18)	3954		7400	3446	
SECTION 19					
-L- 83+00.00 TO 105+00.00 (LT)	2138		7484	5346	
-Y7- 15+34.00 TO 18+32.19	350		152		198
SUBTOTAL (SECTION 19)	2488		7636	5346	198
SECTION 20					
-L- 163+00.00 TO 189+00.00 (LT)	4932		9261	4369	40
-Y9- 14+13.00 TO 19+02.07	1252		42		1210
-DRW9- 10+40.00 TO 11+29.00	13		28	15	
SUBTOTAL (SECTION 20)	6071		9330	4509	1250
SECTION 21					
-L- 189+00.00 TO 219+00.00 (LT)	20988		11236		9752
SUBTOTAL (SECTION 21)	20988		11236		9752
SECTION 22					
-L- 219+00.00 TO 252+00.00 (LT)	6825		28686	21861	
-Y11- 12+75.00 TO 17+11.77	4408		427		3981
SUBTOTAL (SECTION 22)	11233		29113	21861	3981
SECTION 23					
-L- 349+00.00 TO 368+00.00 (LT)	11548		9975		1573
-Y17- 10+19.00 TO 11+71.18	55		13		42
-DRW16- 10+38.00 TO 11+39.00	198		16		182
-DRW17- 10+20.00 TO 10+99.00	653				653
-L- 348+80.00 TO 352+90.00 (TEMP)			938	938	
SUBTOTAL (SECTION 23)	12454		10942	938	2450

LOCATION	UNCLASSIFIED EXCAVATION	UNDERCUT EXCAVATION	EMBANKMENT +%	BORROW	TOTAL WASTE
SECTION 24					
-L- 245+00.00 TO 275+50.00 (RT)	11169		18269	7100	
-Y12- 10+47.00 TO 16+72.00	311		7388	7077	
-DRW12- 10+58.03 TO 11+05.00	17		77	60	
-DRW12A- 10+14.02 TO 10+71.00	7		271	264	
SUBTOTAL (SECTION 24)	11504		26005	14501	
SECTION 25					
-L- 275+50.00 TO 305+00.00 (RT)	7724		30050	22326	
-DRW13A- 10+51.00 TO 11+00.00	9		133	124	
-DRW13B- 10+51.00 TO 10+90.00	22		156	134	
SUBTOTAL (SECTION 25)	7755		30338	22583	
SECTION 26					
-L- 305+00.00 TO 335+27.80 (RT)	39978		18343		21635
-Y15- 14+36.86 TO 16+95.00	151		313	162	
-DRW14- 10+51.00 TO 11+30.00	4		712	708	
SUBTOTAL (SECTION 26)	40133		19368	870	21635
TOTAL	505524	1200	703324	350601	154002
MATERIAL FOR SHOULDER CONSTRUCTION			51317	51317	
LOSS DUE TO CLEARING & GRUBBING	-29000			29000	
SELECT GRANULAR MATERIAL IN LIEU OF BORROW			-1680	-1680	
ADDITIONAL UNDERCUT		5800	6960	6960	5800
ROCK WASTE TO REPLACE BORROW				-925	-925
ADJUST FOR ROCK WASTE			-185	-185	
WASTE IN LIEU OF BORROW				-134449	-134449
PROJECT TOTALS	476524	7000	759736	300639	24428
EST. 5% TO REPLACE TOP SOIL ON BORROW PIT				15032	
GRAND TOTALS	476524	7000	759736	315671	24428
SAY	477000	7000		316000	
EST SHALLOW UNDERCUT	500 CY				
DRAINAGE DITCH EXCAVATION	10600 CY				
EST SELECT GRANULAR MATERIAL	8800 CY				
EST SELECT GRANULAR MATERIAL CLASS III	5000 CY				
PAVEMENT STRUCTURE VOLUME	66100 CY				

NOTE: NCDOT GEOENVIRONMENTAL SECTION HAS DETERMINED THAT THERE MAY BE APPROXIMATELY 500 TONS OF PETROLEUM CONTAMINATED SOIL WITHIN THE PROJECT LIMITS (SEE PLANS FOR LOCATIONS). PLEASE SEE THE PROJECT SPECIAL PROVISION AND DETAIL IN THE PLANS TO DETERMINE HOW TO HANDLE THIS MATERIAL.

NOTE: THESE EARTHWORK QUANTITIES ARE BASED IN PART ON SUBSURFACE DATA PROVIDED BY THE GEOTECHNICAL ENGINEERING UNIT.

REVISIONS

5/28/99

12/13/2018

COMPUTED BY: RSH DATE: 12/4/2018
CHECKED BY: JWM DATE: 12/4/2018

5/28/99

PROJECT REFERENCE NO.	SHEET NO.
R-2530B	3B-3

Kimley»Horn ©2018
421 FAYETTEVILLE STREET, SUITE 600
RALEIGH, NC 27601

REVISIONS

GUARDRAIL SUMMARY

"N" = DISTANCE FROM EDGE OF LANE TO FACE OF GUARDRAIL.
TOTAL SHOULDER WIDTH = DISTANCE FROM EDGE OF TRAVEL LANE TO SHOULDER BREAK POINT.
FLARE LENGTH = DISTANCE FROM LAST SECTION OF PARALLEL GUARDRAIL TO END OF GUARDRAIL.
W = TOTAL WIDTH OF FLARE FROM BEGINNING OF TAPER TO END OF GUARDRAIL.
G = GATING IMPACT ATTENUATOR TYPE TL-3
NG = NON-GATING IMPACT ATTENUATOR TYPE TL-3

SURVEY LINE	BEG. STA.	END STA.	LOCATION	LENGTH			WARRANT POINT		"N" DIST. FROM E.O.L.	TOTAL SHOULDER WIDTH	FLARE LENGTH		W		ANCHORS						IMPACT ATTENUATOR TYPE 350			TERMINAL SECTIONS	REMOVE EXISTING GUARDRAIL	REMOVE AND STOCKPILE EXISTING GUARDRAIL	REMARKS
				STRAIGHT	SHOP CURVED	DOUBLE FACED	APPROACH END	TRAILING END			APPROACH END	TRAILING END	APPROACH END	TRAILING END	GREU TL-2	GREU TL-3	GREU MEDIAN TL-3	TEMP GREU TL-3	CAT-1	AT-1	EA	G	NG				
-L-	37+22.97	39+41.72	RT	218.75			38+72.97		14'	16'						1			1								
-L-	51+13.77	53+70.02	RT	256.25			52+63.77		14'	16'						1			1								
-L-	52+19.30	55+13.05	LT	293.75			53+38.05		14'	16'						1			1								
-L-	87+60.00	89+28.75	RT	168.75			88+00.00		14'	16'						1			1						27		REMOVE 27 LF EXIST GUARDAIL NEAR -L- STA 87+40 RT
-L-	92+11.72	94+17.97	RT	206.25			93+49.22		14'	16'						1			1								
-L-	92+97.24	95+15.99	LT	218.75			93+65.99		14'	16'						1			1								
-L-	143+51.59	145+62.50	LT	193.75	37.50		144+37.50		10'	13'	50		1			1				1							
-L-	146+50.00	150+12.50	LT	362.50			148+75.00		10'	13'	50	50	1	1		2											EXTENDED TRAILING END DUE TO TMP
-L-	195+50.00	199+75.00	LT	425.00			198+50.00		10'	13'	50		1	1		2											EXTENDED TRAILING END DUE TO TMP
-L-	210+25.00	214+62.50	RT	437.50			211+50.00		10'	13'	50	50	1	1		2											EXTENDED TRAILING END DUE TO TMP
-L-	216+93.50	226+06.00	RT	912.50			218+18.50		10'	13'	50	50	1	1		2									277		EXTENDED TRAILING END DUE TO TMP
-L-	226+39.35	228+56.25	RT	143.75	87.50		226+89.35		10'	13'	50		1			1			1								
-L-	234+12.50	241+25.00	RT	712.50			235+45.00		10'	13'	50	50	1	1		2									452		EXTENDED TRAILING END DUE TO TMP
-L-	296+22.66	306+28.91	RT	1006.25			297+47.66		10'	13'	50		1			1			1						379		
-L-	304+00.00	309+72.15	LT	518.75	62.50		309+00.00		10'	13'	50		1			1				1							EXTENDED TRAILING END DUE TO TMP
-L-	311+00.00	322+25.00	LT	1081.25			320+90.00		10'	13'	50		1	1		2											EXTENDED TRAILING END DUE TO TMP
-L-	332+91.82	335+29.32	LT	237.50				335+29.32	6'	9'		50		1		1									51		EXTENDED TRAILING END DUE TO TMP
-L-	332+95.69	335+33.19	RT	237.50			335+33.19		VARIES	VARIES	50		1			1									170		
-L-	333+16.82	335+29.32	MED-LT	212.50				335+29.32	6'	9'		50		1			1								50		
-L-	333+58.19	335+33.19	MED-RT	175.00			335+33.19		VARIES	VARIES	50		1				1								171		
-L-	346+92.07	348+92.07	LT	200.00			346+92.07		VARIES	VARIES	50		1			1									147		
-L-	346+92.07	348+67.07	MED-LT	175.00			346+92.07		VARIES	VARIES	50		1				1								133		
-L-	347+09.05	348+34.05	MED-RT	125.00				347+09.05	8'	11'		50		1			1								112		
-L-	347+09.05	349+15.30	RT	206.25				347+09.05	VARIES	VARIES									1						192		
-L-	355+50.00	365+43.75	RT	993.75			356+75.00		10'	13'	50		1			1			1								
-L-	361+00.00	365+00.00	LT	387.50	12.50		363+50.00		10'	13'	50	50	1	1		2											EXTENDED TRAILING END DUE TO TMP
-L-	373+75.00	377+75.00	LT	400.00			377+25.00		10'	13'	50	50	1	1		2											EXTENDED TRAILING END DUE TO TMP
-L-	379+00.00	383+56.25	RT	456.25			379+50.00		10'	13'	50		1			1			1								
-L-	379+75.00	385+25.00	LT	550.00			384+00.00		10'	13'	50	50	1	1		2											EXTENDED TRAILING END DUE TO TMP
-Y2-	11+24.73	12+93.48	RT	168.75			11+37.23		2'	4'	25		1		1				1								
-Y2-	23+41.87	25+23.12	RT	181.25			24+66.87		8'	11'	25		1		1				1								
			SUBTOTAL	11906.25	200.00										2	33	4		13	2							
	LESS ANCHOR DEDUCTIONS																										
	GREU TL-2	2 @ 25'	=	50.00																							
	GREU TL-3	33 @ 50'	=	1650.00																							
	MEDIAN TL-3	4 @ 50'	=	200.00																							
	CAT-1	13 @ 6.25'	=	81.25																							
	AT-1	2 @ 6.25'	=	12.50																							
			TOTAL	9912.50	200.00										2	33	4		13	2					2161		
			SAY	9925	200																				2175		
-L-	100+63.00	105+00.50	MED-RT	437.50			101+50.00		2'	6'	50	50	1	1				2									TEMPORARY GUARDRAIL
-L-	112+52.50	117+40.00	MED-LT	487.50				115+79.00	2'	6'	50	50	1	1				2									TEMPORARY GUARDRAIL
-L-	114+62.50	124+87.50	MED-RT	1025.00				123+23.00	2'	8'	50	50	1	1				2									TEMPORARY GUARDRAIL
-L-	125+80.00	139+17.50	MED-RT	1337.50				136+22.00	2'	8'	50	50	1	1				2									TEMPORARY GUARDRAIL
-L-	197+40.00	201+15.00	MED-RT	375.00			198+67.00		2'	6'	50	50	1	1				2									TEMPORARY GUARDRAIL
-L-	215+30.00	219+17.50	MED-LT	387.50			216+98.00	218+58.00	2'	6'	50		1					1									TEMPORARY GUARDRAIL
-L-	215+72.50	219+15.42	MED-RT	350.00	62.50		216+98.00	218+58.00	2'	6'		50		1				1									TEMPORARY GUARDRAIL
-L-	235+60.00	237+73.13	MED-RT	212.50	50.00		236+98.00		2'	5'		50		1				1									TEMPORARY GUARDRAIL; TIE TO EXIST GUARDRAIL
-L-	239+00.00	244+75.00	MED-LT	575.00				243+08.00	2'	8'		50		1				1									TEMPORARY GUARDRAIL; TIE TO EXIST GUARDRAIL
-L-	241+92.50	246+30.00	MED-RT	437.50			243+52.00		2'	6'	50	50	1	1				2									TEMPORARY GUARDRAIL
-L-	256+20.00	261+20.00	MED-LT	500.00				259+90.00	2'	6'	50	50	1	1				2									TEMPORARY GUARDRAIL
-L-	296+37.50	299+00.00	MED-LT	262.50	62.50		296+36.00		2'	5'		50		1				1									TEMPORARY GUARDRAIL
-L-	296+37.50	300+50.00	MED-RT	412.50			296+36.00		2'	VARIES		50		1				1									TEMPORARY GUARDRAIL
-L-	302+25.00	309+50.00	MED-LT	725.00			304+70.00		2'	6'	50	50	1	1				2									TEMPORARY GUARDRAIL
-L-	303+55.00	310+74.30	MED-RT	700.00	75.00			304+75.00	2'	8'		50		1				1									TEMPORARY GUARDRAIL
-Y14-	14+05.00	14+80.00	LT	75.00			14+35.00		2'	8'	50		1					1									TEMPORARY GUARDRAIL
-L-	316+00.00	325+00.00	MED-RT	900.00			316+00.00		2'	8'	50	50	1	1				2									TEMPORARY GUARDRAIL
-L-	323+25.00	328+00.00	MED-LT	475.00				326+70.00	2'	6'	50	50	1	1				2									TEMPORARY GUARDRAIL
-L-	330+65.30	335+27.80	MED-RT	462.50				335+27.80	9'	15'	50		1					1									TEMPORARY GUARDRAIL; TIE TO BRIDGE
-L-	364+00.00	365+37.50	RT	137.50			364+00.00		9'	12'		50		1				1									TEMPORARY GUARDRAIL; TIE TO PROP GUARDRAIL
-L-	368+57.50	373+32.50	MED-LT	475.00			368+57.50		2'	6'	50	50	1	1				2									TEMPORARY GUARDRAIL
-L-	373+70.00	377+82.50	MED-LT	412.50			373+70.00		2'	6'	50	50	1	1				2									TEMPORARY GUARDRAIL
-L-	378+45.00	383+70.00	MED-LT	525.00			374+90.00	382+25.00	2'	6'	50	50	1	1				2									TEMPORARY GUARDRAIL
-L-	373+75.00	377+87.50	MED-RT	412.50			373+75.00		2'	8'	50	50	1	1				2									TEMPORARY GUARDRAIL
-L-	378+50.00	385+12.50	MED-RT	662.50			374+90.00	382+15.00	2'	8'	50	50	1	1				2									TEMPORARY GUARDRAIL
			SUBTOTAL	12762.50	250.00													40									
	LESS ANCHOR DEDUCTIONS																										
	TEMP GREU TL-3	40 @ 50'	=	2000.00																							
			TOTAL	10762.50	250.00													40									
			SAY	10775	250																						

ADDITIONAL GUARDRAIL POSTS = 25 EA

12/6/2018

5/28/99

COMPUTED BY: RSH DATE: 12/12/2018
CHECKED BY: JWM DATE: 12/13/2018

PROJECT REFERENCE NO.	SHEET NO.
R-2530B	3B-4

Kimley»Horn ©2018
421 FAYETTEVILLE STREET, SUITE 600
RALEIGH, NC 27601

REVISIONS

REMOVAL OF EXISTING ASPHALT PAVEMENT

LINE	STATION TO STATION	LOCATION	SQ. YDS.
-L-	19+61 TO 21+54	LT	361
-L-	19+61 TO 21+37	RT	212
-L-	25+68 TO 42+11	LT	3048
-L-	28+42 TO 43+27	LT/RT	2751
-L-	43+18 TO 56+15	LT	1572
-L-	57+11 TO 61+17	LT	102
-L-	61+48 TO 69+15	LT	489
-L-	63+83 TO 66+77	LT/RT	1068
-L-	69+40 TO 79+00	LT	1024
-L-	79+65 TO 90+47	LT/RT	677
-L-	91+09 TO 106+11	LT/RT	1829
-L-	106+42 TO 147+91	RT	4230
-L-	154+07 TO 159+50	RT	188
-L-	159+58 TO 181+95	LT/RT	2429
-L-	186+25 TO 237+98	LT	4621
-L-	238+75 TO 242+50	LT	461
-L-	245+46 TO 252+99	LT/RT	1169
-L-	261+75 TO 284+39	RT	3980
-L-	286+24 TO 295+37	LT/RT	783
-L-	296+17 TO 314+13	RT	724
-L-	316+75 TO 329+15	LT/RT	3956
-L-	333+50 TO 333+75	LT	64
-L-	333+75 TO 335+51	RT	472
-L-	348+25 TO 350+75	RT	877
-L-	351+99 TO 357+66	LT/RT	624
-L-	357+58 TO 359+43	RT	604
-L-	359+75 TO 366+97	LT/RT	1147
-L-	366+37 TO 388+88	RT	1341
-Y1-	9+06 TO 17+37	RT	702
-Y1-	10+76 TO 19+22	LT	1215
-Y1-	20+74 TO 27+79	RT	465
-Y1-	23+42 TO 27+66	LT	518
-Y1-	27+98 TO 28+89	LT/RT	72
-Y2-	10+83 TO 21+92	LT	175
-Y2-	12+93 TO 17+76	RT	319
-Y2-	22+25 TO 26+39	LT/RT	1147
-Y2-	29+16 TO 31+29	RT	182
-Y2-	31+20 TO 31+96	LT	9
SUBTOTAL			45604

REMOVAL OF EXISTING ASPHALT PAVEMENT

LINE	STATION TO STATION	LOCATION	SQ. YDS.
-Y2A-	10+00 TO 16+99	LT	2238
-Y2A-	16+54 TO 17+15	RT	105
-Y3-	14+88 TO 15+54	RT	7
-Y3-	14+88 TO 15+75	LT	9
-Y6-	10+00 TO 12+11	LT/RT	1062
-Y7-	15+34 TO 16+09	RT	3
-Y7-	17+30 TO 17+69	LT	79
-Y8-	13+97 TO 14+27	RT	49
-Y8-	15+75 TO 16+15	LT/RT	97
-Y8-	18+65 TO 27+06	LT/RT	1540
-Y9-	15+25 TO 19+01	LT/RT	893
-Y10-	10+00 TO 10+54	LT/RT	243
-Y11-	13+05 TO 16+75	LT/RT	756
-Y12-	10+56 TO 13+33	LT	124
-Y12-	14+13 TO 15+06	RT	3
-Y12-	15+75 TO 16+25	LT/RT	116
-Y14-	11+78 TO 12+75	LT/RT	114
-Y14-	12+55 TO 15+03	LT	508
-Y15-	14+58 TO 16+86	RT	23
-Y15-	14+80 TO 16+72	LT	22
-Y16-	10+12 TO 13+17	RT	1838
-Y16-	14+82 TO 15+63	LT	65
-Y18-	10+50 TO 10+79	LT/RT	69
-Y19-	10+53 TO 10+97	LT/RT	11
-DET1-	10+50 TO 17+08	LT/RT	1289
-DET2-	10+49 TO 17+32	LT/RT	1339
-DET3-	10+50 TO 18+43	LT/RT	1652
-DET4-	10+66 TO 15+80	LT/RT	1219
-DET5-	10+71 TO 23+69	LT/RT	2296
-L-	TEMP. PVMT.	VARIES	7929
-RBT-	TEMP. PVMT.	VARIES	630
-Y14-	TEMP. PVMT.	VARIES	86
-Y16-	TEMP. PVMT.	VARIES	496
SUBTOTAL			26910
TOTAL			72515
SAY			72600

REMOVAL OF EXISTING CONCRETE PAVEMENT

LINE	STATION TO STATION	LOCATION	SQ. YDS.
-L-	21+36 TO 23+00	RT	108
-L-	30+95 TO 35+22	LT	107
-L-	32+26 TO 38+34	RT	161
-L-	47+90 TO 59+05	LT/RT	565
-L-	62+49 TO 65+54	LT	126
-L-	65+27 TO 65+54	RT	57
-L-	71+22 TO 76+41	LT	148
-L-	106+72 TO 115+49	RT	119
-L-	143+50 TO 143+66	RT	42
-L-	145+40 TO 145+60	LT/RT	125
-L-	171+55 TO 172+15	LT/RT	279
-L-	190+26 TO 190+60	LT/RT	188
-L-	202+95 TO 203+18	LT	61
-L-	258+43 TO 267+27	RT	253
-Y1-	9+67 TO 16+42	LT	45
-Y1-	12+73 TO 13+85	LT	19
-Y1-	24+01 TO 26+01	RT	117
-Y2-	14+65 TO 15+80	RT	84
-Y6-	11+57 TO 11+91	LT	53
-Y6-	11+77 TO 12+04	RT	84
-DRW4-	10+00 TO 10+95	LT/RT	121
-Y8-	14+71 TO 14+96	LT	62
-DRW9-	10+40 TO 11+50	LT/RT	152
-Y15-	14+48 TO 15+03	LT/RT	41
TOTAL			3116
SAY			3120

SUMMARY OF SHOULDER BERM GUTTER

LINE	STATION TO STATION	LOCATION	LENGTH (LF)
-L-	143+75.00 TO 145+12.50	LT	137.50
-L-	147+00.00 TO 149+50.00	LT	250
-L-	196+00.00 TO 199+25.00	LT	325
-L-	217+50.00 TO 225+56.00	RT	806
-L-	226+89.35 TO 228+50.00	RT	160.65
-L-	235+00.00 TO 240+25.00	RT	525
-L-	298+00.00 TO 304+30.00	RT	630
-L-	305+00.00 TO 309+00.00	LT	400
-L-	311+50.00 TO 314+00.00	LT	250
-L-	333+41.82 TO 335+23.90	LT	182.01
-L-	346+97.47 TO 348+35.00	LT	137.53
-L-	347+15.30 TO 349+10.00	RT	194.70
-L-	362+00.00 TO 364+25.00	LT	225
-L-	374+75.00 TO 377+25.00	LT	250
-L-	379+60.00 TO 383+50.00	RT	390
-L-	380+75.00 TO 384+75.00	LT	400
TOTAL			5263.39
SAY			5270

BREAKING OF EXISTING ASPHALT PAVEMENT

LINE	STATION TO STATION	LOCATION	SQ. YDS.
-L-	115+00 TO 117+75	RT	734
-L-	142+25 TO 159+25	RT	5508
-L-	196+75 TO 199+00	LT	626
-L-	222+00 TO 231+25	LT	2719
-L-	236+00 TO 238+75	LT	966
-L-	242+50 TO 246+75	LT	1110
-L-	249+76 TO 261+75	RT	2873
-L-	275+75 TO 287+25	RT	3162
-L-	301+50 TO 311+00	RT	2372
-L-	333+75 TO 335+76	LT	519
-Y2-	22+75 TO 23+69	LT/RT	108
-Y8-	16+15 TO 18+24	LT/RT	703
-Y8-	24+00 TO 25+25	LT/RT	258
-Y11-	16+75 TO 17+07	LT/RT	126
-Y12-	10+57 TO 15+75	LT/RT	1576
-Y14-	12+18 TO 12+60	LT/RT	81
TOTAL			23441
SAY			23450

12/13/2018

DocuSign Envelope ID: 43AB7A97-291D-43E8-8998-BCA0207C4F2F

5/28/99

COMPUTED BY: THS DATE: 12/11/2018
CHECKED BY: JWM DATE: 12/12/2018

STATE OF NORTH CAROLINA
DIVISION OF HIGHWAYS

PROJECT REFERENCE NO.	SHEET NO.
R-2530B	3B-5

Kimley»Horn ©2018
421 FAYETTEVILLE STREET, SUITE 600
RALEIGH, NC 27601

PAVEMENT DESIGN ENGINEER

NORTH CAROLINA PROFESSIONAL SEAL 024964 ENGINEER JOSEPH T. HOLLAND
Docusigned by: Joseph T. Holland 6A2196D5B4AE4E0...
1/22/2019

DOCUMENT NOT CONSIDERED FINAL UNLESS ALL SIGNATURES COMPLETED

REVISIONS

SHOULDER DRAIN SUMMARY

ABBREVIATIONS:
CP = CONCRETE PAD (NCDOT STD. 816.01)
2GI = DRAINAGE STRUCTURE
CB = CATCH BASIN
JB = JUNCTION BOX

SURVEY LINE	BEG. STA.	END STA.	LOCATION		OUTLET LOCATIONS (STATIONS ARE APPROXIMATE)					
			OFFSET	SHOULDER						
–L–	108+10	118+20	LT	OUTSIDE	108+10 (CP)	111+00 (CP)	113+00 (CP)	114+75 (CP)	117+00 (2GI, #1109)	
–L–	140+00	151+75	LT	OUTSIDE	141+50 (2GI, #1303)	144+50 (2GI, #1309)	146+50 (CP)	148+00 (2GI, #1314)	151+00 (CP)	
–L–	153+25	163+00	LT	OUTSIDE	153+25 (CP)	156+00 (CP)	157+00 (2GI, #1417)	158+50 (2GI, #1413)	161+50 (CP)	
–L–	171+00	173+40	LT	OUTSIDE	171+00 (CP)	173+00 (CP)				
–L–	174+15	187+50	LT	OUTSIDE	174+15 (CP)	177+75 (CP)	180+00 (CP)	182+50 (CP)	185+00 (CP)	187+50 (CP)
–L–	195+00	205+50	LT	OUTSIDE	198+00 (2GI, #1702)	200+00 (2GI, #1730)	202+25 (CP)	205+50 (CP)		
–L–	206+50	208+50	LT	OUTSIDE	208+50 (2GI, #1719)					
–L–	229+00	237+00	LT	OUTSIDE	230+00 (CB, #1917)	232+00 (CP)	233+40 (2GI, #1918)	237+00 (CP)		
–L–	239+00	246+65	LT	OUTSIDE	240+10 (2GI, #2008)	243+00 (CP)	245+00 (CP)			
–L–	255+10	260+75	LT	OUTSIDE	256+70 (2GI, #2107)	260+00 (CP)				
–L–	261+50	269+90	LT	OUTSIDE	261+50 (CP)	264+50 (CP)	267+00 (CP)	269+90 (2GI, #2221)		
–L–	305+00	309+00	LT	OUTSIDE	305+00 (CP)	305+50 (2GI, #2419)	306+75 (2GI, #2501)			
–L–	332+00	335+00	LT	OUTSIDE	335+00 (CP)					
–L–	347+10	353+00	LT	OUTSIDE	347+10 (CP)	348+00 (2GI, #2814)	350+00 (CP)	353+00 (CP)		
–L–	357+00	365+75	LT	OUTSIDE	360+00 (CP)	362+80 (2GI, #2907)	363+20 (2GI, #2906)	365+00 (2GI, #2909)		
–L–	100+50	108+10	LT	INSIDE	100+50 (2GI, #0933)	101+75 (2GI, #1002)	105+00 (CP)	107+50 (2GI, #1008)		
–L–	123+00	130+00	LT	INSIDE	123+00 (2GI, #1116)	126+00 (CP)	130+00 (2GI, #1211)			
–L–	246+66	255+00	LT	INSIDE	246+66 (CP)	251+00 (2GI, #2016)	253+00 (2GI, #2103)	255+00 (CP)		
–L–	316+00	322+80	LT	INSIDE	316+00 (CP)	318+00 (2GI, #2512)	322+80 (CP)			

SURVEY LINE	BEG. STA.	END STA.	LOCATION		OUTLET LOCATIONS (STATIONS ARE APPROXIMATE)									
			OFFSET	SHOULDER										
–L–	97+50	118+90	RT	OUTSIDE	97+50 (CP)	100+50 (CP)	103+50 (CP)	106+50 (CP)	107+50 (2GI, #1009)	110+25 (2GI, #1014)	113+00 (2GI, #1013)	114+50 (CP)	115+50 (JB, #1124)	118+00 (CP)
–L–	119+50	130+00	RT	OUTSIDE	119+50 (CP)	123+00 (2GI, #1117)	126+00 (CP)	127+60 (2GI, #1216)	130+00 (2GI, #1203)					
–L–	139+00	144+15	RT	OUTSIDE	142+00 (CP)	144+15 (CP)								
–L–	144+80	152+50	RT	OUTSIDE	144+80 (CP)	146+50 (CP)	149+50 (CP)							
–L–	171+50	174+20	RT	OUTSIDE	171+50 (CP)									
–L–	174+75	191+50	RT	OUTSIDE	186+50 (2GI, #1606)	188+75 (2GI, #1617)	190+40 (2GI, #1611)	191+50 (2GI, #1610)						
–L–	198+50	203+20	RT	OUTSIDE	198+50 (CP)	201+50 (CP)	203+20 (CP)							
–L–	228+00	261+50	RT	OUTSIDE	238+65 (2GI, #2004)	240+10 (2GI, #2006)	243+00 (CP)	245+00 (CP)	248+00 (CP)	251+00 (2GI, #2015)				
–L–	262+25	269+00	RT	OUTSIDE	262+25 (CP)	264+50 (CP)	267+50 (CP)	269+00 (2GI, #2207)						
–L–	300+00	305+00	RT	OUTSIDE	302+00 (2GI, #2415)	304+00 (2GI, #2412)								
–L–	316+00	323+50	RT	OUTSIDE	316+00 (CP)	318+00 (2GI, #2508)	321+00 (CP)	323+50 (CP)						
–L–	332+00	335+00	RT	OUTSIDE	335+00 (2GI, #2704)									
–L–	347+25	353+00	RT	OUTSIDE	347+25 (CP)	349+00 (2GI, #2803)	352+00 (CP)	353+00 (CP)						
–L–	154+50	162+00	RT	INSIDE	154+50 (2GI, #1331)	156+00 (2GI, #1403)	157+00 (2GI, #1402)	160+00 (2GI, #1406)						
–L–	304+50	311+00	RT	INSIDE	304+90 (CP)	309+00 (2GI, #2503)	310+50 (2GI, #2505)							
–L–	323+60	329+00	RT	INSIDE	325+00 (2GI, #2604)	326+50 (2GI, #2603)	329+00 (2GI, #2610)							
–L–	356+00	365+50	RT	INSIDE	357+00 (2GI, #2808)	359+00 (2GI, #2807)	362+50 (2GI, #2905)	363+40 (2GI, #2904)	364+00 (2GI, #2903)	365+00 (2GI, #2912)				

NCDOT PAY ITEM	QUANTITY TOTALS
SHOULDER DRAIN	30330 LF
4" SHOULDER DRAIN PIPE	30330 LF
4" OUTLET PIPES FOR SHOULDER DRAINS	2550 LF
CONCRETE PAD FOR SHOULDER DRAIN PIPE OUTLET	70 EA

GENERAL NOTES:

1. SHOULDER DRAINS SHALL BE CONSTRUCTED IN ACCORDANCE WITH NCDOT STD. 816.02. LIMITS OF SHOULDER DRAIN CONSTRUCTION ARE LISTED IN THE SHOULDER DRAIN SUMMARY FOUND ON THIS SHEET. SOME LOCATIONS MAY REQUIRE THE USE OF A FLATTER OUTLET PIPE SLOPE THAN SHOWN IN NCDOT STD. 816.02. POSITIVE DRAINAGE SHALL BE MAINTAINED.

2. SHOULDER DRAIN OUTLETS SHALL BE PLACED IN DRAINAGE STRUCTURES WHERE POSSIBLE. IF NOT CONNECTED TO DRAINAGE STRUCTURES, OUTLET PIPES SHALL BE PROTECTED USING A CONCRETE OUTLET PAD, SEE NCDOT STD. 816.01 FOR DETAIL. SHOULDER DRAIN OUTLETS SHALL BE LOCATED AS SHOWN IN THE SHOULDER DRAIN SUMMARY OR AS DETERMINED BY THE ENGINEER.

3. 90 DEGREE BENDS SHOULD BE USED TO OUTLET FROM THE SHOULDER DRAINS WHERE POSSIBLE. WHERE CONCRETE OUTLET PADS ARE USED, OUTLET END ELEVATIONS SHALL BE LOCATED 6 INCHES ABOVE DITCH GRADE WHILE PROVIDING POSITIVE DRAINAGE THROUGH THE OUTLET PIPE. THE USE OF 45 DEGREE BENDS WILL BE ALLOWED SO THAT THE APPROPRIATE OUTLET LOCATION/ELEVATION CAN BE REACHED. IT IS ANTICIPATED THAT OUTLETS LOCATED ON THE OUTSIDE SHOULDER IN CUT SECTIONS WILL BE CONSTRUCTED IN THIS MANNER.

4. THE USE OF CONCRETE OUTLET PADS IS NOT ALLOWED IN MEDIANS; OUTLETS SHALL BE LOCATED IN DRAINAGE STRUCTURES ONLY.

1/18/2019

COMPUTED BY: RSH DATE: 8/9/2019
CHECKED BY: JWM DATE: 8/9/2019

5/28/99

STATE OF NORTH CAROLINA
DIVISION OF HIGHWAYS

PROJECT REFERENCE NO.	SHEET NO.
R-2530B	3B-6

Kimley»Horn ©2018
421 FAYETTEVILLE STREET, SUITE 600
RALEIGH, NC 27601

REVISIONS

SUMMARY OF TEMPORARY WOVEN WIRE FENCE COMPLETE WITH POSTS

LINE	STATION	STATION	LOCATION LT/RT	PARCEL NUMBER	SHEET NUMBER	LINEAR FEET OF FENCE WITH POSTS (LF) CONTINGENCY
–L–	117+15	140+50	LT	089	11, 12	3000
–L–	147+50	148+50	RT	095	13	100
–L–	164+00	167+18	LT	103	14	325
–L–	167+18	171+53	LT	105	14, 15	650
–L–	197+93	215+60	RT	120	17, 18	1775
–Y8–	21+00	26+00	RT	096	34	500
–Y8–	26+00	26+50	RT	208	34	30
–Y10–	10+00	13+14	LT	120	17	325
–Y12–	14+64	16+02	LT	209	22	138
					TOTAL LF	6843
					SAY	7000

8/9/2019

DD85709

COMPUTED BY:	SRG	DATE:	02/14/2019
CHECKED BY:	JDL	DATE:	02/14/2019

PROJECT NO.	SHEET NO.
R-2530B	3D-1

NORTH CAROLINA DEPARTMENT OF TRANSPORTATION
DIVISION OF HIGHWAYS

Note: Invert Elevations indicated are for Bid Purposes only and shall not be used for project construction stakeout. See "Standard Specifications For Roads and Structures, Section 300-5".

LIST OF PIPES, ENDWALLS, ETC. (FOR PIPES 48 INCHES & UNDER)

LINE & STATION	OFFSET	STRUCTURE NUMBER FROM	TO	TOP ELEVATION FT.	INVERT ELEVATION FT.	INVERT ELEVATION FT.	MINIMUM REQUIRED SLOPE %	Drainage Pipe (RCP, CSP, CAAP, HDPE, or PVC) 12	15	18	24	30	36	42	48	DO NOT USE RCP	DO NOT USE CSP	DO NOT USE CAAP	DO NOT USE HDPE	DO NOT USE PVC	C.S. PIPE 15 (.064)	18 (.064)	24 (.064)	30 (.079)	36 (.079)	R. C. PIPE CLASS III 15	18	24	30	36	42	48	R. C. PIPE CLASS IV 15	18	24	30	36	42	48	R. C. PIPE CLASS V 15	18	30	48
Y1 17+69	57 LT	0401																																									
Y1 17+50	11 LT	0403		576.8																																							
		0403	0402		569.1	567.8	0.6																						56														
Y1 18+79	11 LT	0404		578.9																																							
		0404	0403		574.9	572.6																											128										
Y1 17+50	50 RT	0405		575.8																																							
		0405	0403		570.2	569.1	0.6																													60							
Y1 18+05	71 RT	0406		574.8																																							
		0406	0465		572.0	571.7																						20															
Y1 17+29	74 RT	0411		575.8																																							
		0411	0405		572.0	571.2	0.8																											32									
Y1 16+92	74 RT	0412		575.7																																							
L 22+74	26 LT	0413		586.6																																							
		0413	0457		581.2	579.2																													56								
L 22+75	38 RT	0414		587.1																																							
		0414	0413		582.0	581.2																													64								
L 22+25	36 RT	0415		588.5																																							
		0415	0414		583.6	582.5	0.6																											48									
L 31+75	42 RT	0416		562.3																																							
		0416	0509		555.8	555.0	0.5																																48					
L 29+72	43 RT	0417		566.6																																							
		0417	0416		560.3	555.8	0.5																																200					
L 28+55	43 RT	0418		569.4																																							
		0418	0417		564.0	561.3	0.6																													112							
L 28+70	69 RT	0419		569.5																																							
		0419	0451		566.5	565.5																																		40			
L 26+82	43 RT	0420		573.6																																							
		0420	0418		568.1	564.0	0.6																													168							
Y1 20+60	76 LT	0421		581.8																																							
		0421	0448		576.1	572.4	0.4																													96							
Y1 21+15	55 LT	0422		585.2																																							
		0422	0421		578.6	576.1	0.4																													60							
Y1 21+40	53 LT	0423		586.3																																							
		0423	0422		582.4	581.3	0.3																										24										
L 31+75	2 LT	0424		563.2																																							
		0424	0416		558.9	558.0	0.3																											44									
L 31+10	1 LT	0425		564.7																																							
		0425	0453		560.6	559.7	0.7																										40										
L 29+68	9 RT	0426		568.0																																							
		0426	0450		563.9	562.3	0.5																										72										
L 28+00	10 RT	0427		571.9																																							
		0427	0426		567.9	563.9																											164										
Y1 21+15	14 RT	0428		586.8																																							
		0428	0422		579.9	579.1	0.8																						68															
Y1 21+15	45 RT	0429		587.2																																							
		0429	0428		580.2	579.9	0.8																						28															
Y1 22+53	41 RT	0430		591.7																																							
		0430	0429		587.8	583.3																											136										
Y1 22+99	41 RT	0431		593.4																																							
		0431	0430		589.0	587.8																											44										
SHEET TOTALS																												116	56				608	124	120	496		248		40			

STRUCTURE NUMBER FROM	15" SIDE DRAIN PIPE	18" SIDE DRAIN PIPE	24" SIDE DRAIN PIPE	ENDWALLS STD. 838.01 OR STD. 838.11 (UNLESS NOTED OTHERWISE) CY	DRAINAGE STRUCTURE MASONRY CY	QUANTITIES FOR DRAINAGE STRUCTURES (NOTE: TOTAL LIN. FT. FOR PAY QUANTITY SHALL BE A + (1.3 X B)) 0' THRU 5' EACH	A: 5' THRU 10' LIN. FT.	B: 10' AND ABOVE LIN. FT.	C.B. STD. 840.01 OR STD. 840.02	FRAME, GRATES, AND HOOD STD. 840.03 GRATE TYPE E	F	G	CONCRETE TRANSITIONAL SECTION: D.I. STD. 852.04 OR STD. 852.06	C.B. STD. 852.05	OPEN THROAT C.B. STD. 840.04 OR STD. 840.05	D.I. STD. 840.14 OR STD. 840.15	D.I. FRAME AND GRATES STD. 840.16	G.D.I. TYPE "A" STD. 840.17 OR STD. 840.26	G.D.I. TYPE "B" STD. 840.18 OR STD. 840.27	G.D.I. TYPE "D" STD. 840.19 OR STD. 840.28	G.D.I. (W.S. FLAT) FRAME W/ 2 GRATES STD. 840.20	G.D.I. (W.S. SAG) FRAME W/ 2 GRATES STD. 840.22	G.D.I. (N.S. SAG) FRAME W/ 2 GRATES STD. 840.24	G.D.I. (N.S. FLAT) FRAME W/ 2 GRATES STD. 840.29	J.B. STD. 840.31 OR STD. 840.32	T.B.J.B. STD. 840.34	T.B.D.I. STD. 840.35	4" DRAINAGE PIPE (LIN. FT.)	SPRING BOX STD. 840.41	M.H. FRAME AND COVER STD. 840.54	ADJUST C.B.	CB STD. 840D02 (SPECIAL DETAIL)	TB2GI STD. 840D35 (SPECIAL DETAIL)	8" HDPE (LIN. FT.)	15" C.S. ELBOW	18" C.S. ELBOW	24" C.S. ELBOW	30" C.S. ELBOW	36" C.S. ELBOW	4" CONCRETE PAVED DITCH (SY)	MODIFIED CONC. FLUME	FLOWABLE FILL CY	CONCRETE COLLARS CL. "B" STD. 840.72 CY	CONCRETE AND BRICK PIPE PLUG STD. 840.71 CY	PIPE REMOVAL LIN. FT.	REMARKS
0401																																									1					
0403						1	2.7						1											1			1																			
0404						1							1											1			1																			TIE TO EX. DI
0405						1	0.6		1			1																																		
0406						1														1			1																							TIE TO EX. 18"
0411						1			1		1																																			REMOVE EX CB AND TIE TO EX 18"
0412																															1															
0413						1	0.4		1			1																																		REMOVE EX JB
0414						1	0.1		1		1																																			
0415						1			1		1																																			
0416						1	1.5				1																					1														SPECIAL DESIGN, SEE DETAIL 2C-7
0417						1	1.3				1																					1														SPECIAL DESIGN, SEE DETAIL 2C-7
0418						1	0.4		1		1																																			
0419						1			1			1																																		
0420						1	0.5		1		1																																			TIE TO PROP 18"
0421						1	0.7		1		1																																			
0422						1	1.6		1		1																																			
0423						1			1		1																																			
0424						1			1		1			1																																
0425						1			1		1			1																																
0426						1							1											1			1																			
0427						1							1											1			1																			
0428						1	1.9						1											1			1																			
0429						1	2.0		1			1																																		
0430						1			1			1																																		
0431						1			1			1																																		
SHEET TOTALS						24	13.7		16		12	6	5	2						1			1	5			5				1	2									1					

ABBREVIATIONS

- C.A.A. CORRUGATED ALUMINIUM ALLOY
- C.B. CATCH BASIN
- C.S. CORRUGATED STEEL
- D.I. DROP INLET
- G.D.I. GRATED DROP INLET
- H.D.P.E. HIGH DENSITY POLYETHYLENE
- J.B. JUNCTION BOX
- M.H. MANHOLE
- N.S. NARROW SLOT
- P.V.C. POLYVINYL CHLORIDE
- R.C. REINFORCED CONCRETE
- T.B.D.I. TRAFFIC BEARING DROP INLET
- T.B.J.B. TRAFFIC BEARING JUNCTION BOX
- W.S. WIDE SLOT

D085709

COMPUTED BY:	SRG	DATE:	02/14/2019
CHECKED BY:	JDL	DATE:	02/14/2019

PROJECT NO.	SHEET NO.
R-2530B	3D-2

NORTH CAROLINA DEPARTMENT OF TRANSPORTATION
DIVISION OF HIGHWAYS

**Note: Invert Elevations indicated are for Bid Purposes only and shall not be used for project construction stakeout.
See "Standard Specifications For Roads and Structures, Section 300-5".**

LIST OF PIPES, ENDWALLS, ETC. (FOR PIPES 48 INCHES & UNDER)

LINE & STATION	OFFSET	STRUCTURE NUMBER FROM	TO	TOP ELEVATION FT.	INVERT ELEVATION FT.	INVERT ELEVATION FT.	MINIMUM REQUIRED SLOPE %	Drainage Pipe (RCP, CSP, CAAP, HDPE, or PVC) 12	15	18	24	30	36	42	48	DO NOT USE RCP	DO NOT USE CSP	DO NOT USE CAAP	DO NOT USE HDPE	DO NOT USE PVC	C.S. PIPE 15 .064	18 .064	24 .064	30 .079	36 .079	R. C. PIPE CLASS III 15	18	24	30	36	42	48	R. C. PIPE CLASS IV 15	18	24	30	36	42	48	R. C. PIPE CLASS V 15	18	30	48	15" SIDE DRAIN PIPE	18" SIDE DRAIN PIPE	24" SIDE DRAIN PIPE
Y1 21+30	64 RT	0433		585.4																																										
		0433	0429		580.5	580.2	0.6																					24																		
Y1 21+06	83 RT	0434		585.0																																										
		0434	0433		581.0	580.5	0.6																					28																		
Y1 17+29	107 RT	0439		577.6																																										
		0439	0411		573.0	572.0	0.7																											32												
L 20+75	19 LT	0441		593.3																																										
		0441	0413		589.4	582.8																											200													
L 20+52	39 LT	0442		592.8																																										
		0442	0441		589.7	589.4																											32													
L 20+29	38 LT	0443		593.1																																										
		0443	0442		590.1	589.7																											20													
L 19+80	37 LT	0444		595.3																																										
		0444	0443		592.1	590.1																											48													
L 21+38	33 LT	0445		591.2																																										
		0445	0415		585.7	583.6	0.6																				84																			
L 24+90	87 RT	0446		578.0																																										
		0446	0447		575.7	574.7			68																																					
L 25+55	63 RT	0447		577.0																																										
		0447	0448		574.7	574.5			20																																					
L 25+55	45 RT	0448		577.6																																										
		0448	0420		572.4	568.1	0.3																													124										
L 26+00	10 RT	0449		576.9																																										
		0449	0459		572.9	570.7																											80													
L 30+40	3 RT	0450		566.3																																										
		0450	0425		562.3	560.6	0.6																										68													
L 29+12	63 RT	0451		568.6																																										
		0451	0452		562.7	562.4	0.6																													24										
L 29+37	62 RT	0452		568.0																																										
		0452	0454		561.8	561.6	0.4																														12									
L 31+50	1 LT	0453		563.8																																										
		0453	0424		559.7	559.2	0.8																										24													
L 29+52	60 RT	0454		568.1																																										
		0454	0417		561.6	561.3	0.5																														28									
L 23+30	33 LT	0457		584.5																																										
		0457	0464		579.2	576.6																													76											
Y1 19+00	11 LT	0458		579.3																																										
		0458	0404		575.3	574.9																											20													
L 26+82	10 RT	0459		574.8																																										
		0459	0427		570.7	567.9																											116													
Y1 19+35	52 RT	0464		581.3																																										
		0464	0465		576.6	571.7																													128											
Y1 18+05	51 RT	0465		577.2																																										
		0465	0405		571.2	570.2																														52										
L 21+38	38 RT	0466																																												
		0466	0445													X	X	X		X																										
L 38+46	40 RT	0502		557.1																																										
		0502	0501		550.6	550.5	0.4																																				28			
L 38+13	40 RT	0503		557.1																																										
		0503	0502		550.7	550.6	0.4																																				32			
SHEET TOTALS									88																		84	52					608	32	204	200	40							60			

LINE & STATION	STRUCTURE NUMBER FROM	TO	ENDWALLS STD. 838.01 OR STD. 838.11 (UNLESS NOTED OTHERWISE) CY	DRAINAGE STRUCTURE MASONRY CY	QUANTITIES FOR DRAINAGE STRUCTURES (NOTE: TOTAL LIN. FT. FOR PAY QUANTITY SHALL BE A + (1.3 X B)) 0' THRU 5' EACH	A 5' THRU 10' LIN. FT.	B 10' AND ABOVE LIN. FT.	C.B. STD. 840.01 OR STD. 840.02	FRAME, GRATES, AND HOOD STD. 840.03 GRATE TYPE E	F	G	CONCRETE TRANSITIONAL SECTION D.I. STD. 852.04 OR STD. 852.06	C.B. STD. 852.05	OPEN THROAT C.B. STD. 840.04 OR STD. 840.05	D.I. STD. 840.14 OR STD. 840.15	D.I. FRAME AND GRATES STD. 840.16	G.D.I. TYPE "A" STD. 840.17 OR STD. 840.26	G.D.I. TYPE "B" STD. 840.18 OR STD. 840.27	G.D.I. TYPE "D" STD. 840.19 OR STD. 840.28	G.D.I. (W.S. FLAT) FRAME W/ 2 GRATES STD. 840.20	G.D.I. (W.S. SAG) FRAME W/ 2 GRATES STD. 840.22	G.D.I. (N.S. SAG) FRAME W/ 2 GRATES STD. 840.24	G.D.I. (N.S. FLAT) FRAME W/ 2 GRATES STD. 840.29	J.B. STD. 840.31 OR STD. 840.32	T.B.J.B. STD. 840.34	T.B.D.I. STD. 840.35	4" DRAINAGE PIPE (LIN. FT.)	SPRING BOX STD. 840.41	M.H. FRAME AND COVER STD. 840.54	ADJUST C.B.	CB STD. 840D02 (SPECIAL DETAIL)	TB2GI STD. 840D35 (SPECIAL DETAIL)	8" HDPE (LIN. FT.)	15" C.S. ELBOW	18" C.S. ELBOW	24" C.S. ELBOW	30" C.S. ELBOW	36" C.S. ELBOW	4" CONCRETE PAVED DITCH (SY)	MODIFIED CONC. FLUME	FLOWABLE FILL CY	CONCRETE COLLARS CL. "B" STD. 840.72 CY	CONCRETE AND BRICK PIPE PLUG STD. 840.71 CY	PIPE REMOVAL LIN. FT.	REMARKS
Y1 21+30	0433				1										1	1																													
	0433	0429																																											
Y1 21+06	0434				1										1	1																													TIE TO EX 15"
	0434	0433																																											
Y1 17+29	0439				1			1		1																																			TIE TO EX 15"
	0439	0411																																											
L 20+75	0441				1			1			1																																		
	0441	0413																																											
L 20+52	0442				1			1			1																																		
	0442	0441																																											
L 20+29	0443				1			1		1																																			
	0443	0442																																											
L 19+80	0444				1										1	1																													
	0444	0443																																											
L 21+38	0445				1	0.5		1		1																																			REMOVE EX BLIND JB
	0445	0415																																											
L 24+90	0446				1										1	1																													
	0446	0447																																											
L 25+55	0447				1										1	1																													
	0447	0448																																											
L 25+55	0448				1	0.2		1		1																																			
	0448	0420																																											
L 26+00	0449				1							1											1			1																			
	0449	0459																																											
L 30+40	0450				1			1		1			1																																
	0450	0425																																											
L 29+12	0451				1	0.9		1		1																																			TIE TO EX 24"
	0451	0452																																											
L 29+37	0452				1	1.2																			1				1																TIE TO EX 24"
	0452	0454																																											
L 31+50	0453				1			1		1			1																																
	0453	0424																																											
L 29+52	0454				1	1.5		1		1																																			
	0454	0417																																											
L 23+30	0457				1	0.3		1			1																																		
	0457	0464																																											
Y1 19+00	0458				1							1											1			1																			
	0458	0404																																											
L 26+82	0459				1							1											1			1																			
	0459	0427																																											
Y1 19+35	0464				1			1			1																																		
	0464	0465																																											
Y1 18+05	0465				1	1.0		1			1																																		
	0465	0405																																											
L 21+38	0466																																									0.3528			
	0466	0445																																4												
L 38+46	0502				1	1.5					1																				1														SPECIAL DESIGN, SEE DETAIL 2C-7
	0502	0501																																											
L 38+13	0503				1	1.4			1																						1														SPECIAL DESIGN, SEE DETAIL 2C-7
	0503	0502																																											
SHEET TOTALS					24	8.5		13	1	8	6	3	2		5	5							3		1	3			1		2		4									0.3528			

ABBREVIATIONS

- C.A.A. CORRUGATED ALUMINIUM ALLOY
- C.B. CATCH BASIN
- C.S. CORRUGATED STEEL
- D.I. DROP INLET
- G.D.I. GRATED DROP INLET
- H.D.P.E. HIGH DENSITY POLYETHYLENE
- J.B. JUNCTION BOX
- M.H. MANHOLE
- N.S. NARROW SLOT
- P.V.C. POLYVINYL CHLORIDE
- R.C. REINFORCED CONCRETE
- T.B.D.I. TRAFFIC BEARING DROP INLET
- T.B.J.B. TRAFFIC BEARING JUNCTION BOX
- W.S. WIDE SLOT

D085709

COMPUTED BY:	SRG	DATE:	02/14/2019
CHECKED BY:	JDL	DATE:	02/14/2019

PROJECT NO.	SHEET NO.
R-2530B	3D-3

NORTH CAROLINA DEPARTMENT OF TRANSPORTATION
DIVISION OF HIGHWAYS

Note: Invert Elevations indicated are for Bid Purposes only and shall not be used for project construction stakeout.
See "Standard Specifications For Roads and Structures, Section 300-5".

LIST OF PIPES, ENDWALLS, ETC. (FOR PIPES 48 INCHES & UNDER)

LINE & STATION (SIZE; THICKNESS OR GAUGE)	OFFSET	STRUCTURE NUMBER FROM	TO	TOP ELEVATION FT.	INVERT ELEVATION FT.	INVERT ELEVATION FT.	MINIMUM REQUIRED SLOPE %	Drainage Pipe (RCP, CSP, CAAP, HDPE, or PVC) 12	15	18	24	30	36	42	48	DO NOT USE RCP	DO NOT USE CSP	DO NOT USE CAAP	DO NOT USE HDPE	DO NOT USE PVC	C.S. PIPE 15 (.064)	18 (.064)	24 (.064)	30 (.079)	36 (.079)	R. C. PIPE CLASS III 15	18	24	30	36	42	48	R. C. PIPE CLASS IV 15	18	24	30	36	42	48	R. C. PIPE CLASS V 15	18	30	48	15" SIDE DRAIN PIPE	18" SIDE DRAIN PIPE	24" SIDE DRAIN PIPE	ENDWALLS STD. 838.01 OR STD. 838.11 (UNLESS NOTED OTHERWISE) CY	DRAINAGE STRUCTURE MASONRY CY	QUANTITIES FOR DRAINAGE STRUCTURES (NOTE: TOTAL LIN. FT. FOR PAY QUANTITY SHALL BE A + (1.3 X B)) 0' THRU 5' EACH	A: 5' THRU 10' LIN. FT.	B: 10' AND ABOVE LIN. FT.	C.B. STD. 840.01 OR STD. 840.02	FRAME, GRATES, AND HOOD STD. 840.03 GRATE TYPE E	F	G	CONCRETE TRANSITIONAL SECTION D.I. STD. 852.04 OR STD. 852.06	C.B. STD. 852.05	OPEN THROAT C.B. STD. 840.04 OR STD. 840.05	D.I. STD. 840.14 OR STD. 840.15	D.I. FRAME AND GRATES STD. 840.16	G.D.I. TYPE "A" STD. 840.17 OR STD. 840.26	G.D.I. TYPE "B" STD. 840.18 OR STD. 840.27	G.D.I. TYPE "D" STD. 840.19 OR STD. 840.28	G.D.I. (W.S. FLAT) FRAME W/ 2 GRATES STD. 840.20	G.D.I. (W.S. SAG) FRAME W/ 2 GRATES STD. 840.22	G.D.I. (N.S. SAG) FRAME W/ 2 GRATES STD. 840.24	G.D.I. (N.S. FLAT) FRAME W/ 2 GRATES STD. 840.29	J.B. STD. 840.31 OR STD. 840.32	T.B.J.B. STD. 840.34	T.B.D.I. STD. 840.35	4" DRAINAGE PIPE (LIN. FT.)	SPRING BOX STD. 840.41	M.H. FRAME AND COVER STD. 840.54	ADJUST C.B.	CB STD. 840D02 (SPECIAL DETAIL)	TB2GI STD. 840D35 (SPECIAL DETAIL)	8" HDPE (LIN. FT.)	15" C.S. ELBOW	18" C.S. ELBOW	24" C.S. ELBOW	30" C.S. ELBOW	36" C.S. ELBOW	4" CONCRETE PAVED DITCH (SY)	MODIFIED CONC. FLUME	FLOWABLE FILL CY	CONCRETE COLLARS CL. "B" STD. 840.72 CY	CONCRETE AND BRICK PIPE PLUG STD. 840.71 CY	PIPE REMOVAL LIN. FT.	REMARKS
L 37+28	39 RT	0504		557.4																																													1	1.4				1																					1															SPECIAL DESIGN, SEE DETAIL 2C-7
		0504	0503		551.0	550.7	0.4																																			84																																																	REMOVE EX CB
L 36+35	39 RT	0505		557.9																																													1	1.6				1																					1															SPECIAL DESIGN, SEE DETAIL 2C-7
		0505	0504		551.3	551.0	0.3																																			92																																																	
L 35+15	47 RT	0506		558.3																																													1	1.6				1																					1															SPECIAL DESIGN, SEE DETAIL 2C-7
		0506	0505		551.7	551.3	0.3																																			120																																																	
L 34+45	39 RT	0507		559.0																																													1	1.8				1																					1															SPECIAL DESIGN, SEE DETAIL 2C-7
		0507	0506		552.2	551.7	0.3																																			68																																																	
L 33+00	40 RT	0508		560.3																																													1	1.5				1																					1															SPECIAL DESIGN, SEE DETAIL 2C-7
		0508	0507		553.8	552.7	0.7																															144																																																								
L 32+23	41 RT	0509		561.3																																													1	1.3				1																					1															SPECIAL DESIGN, SEE DETAIL 2C-7
		0509	0508		555.0	553.8	0.6																															76																																																								
L 38+46	61 RT	0510		558.4																																													1			1	1																																							
		0510	0502		555.2	554.9			20																																																																																		
L 36+30	55 RT	0512		557.7																																													1										1	1																																
		0512	0505		555.4	554.8			16																																																																																		
L 35+00	71 RT	0513		557.0																																													1										1	1																																
		0513	0506		554.5	554.0			28																																																																																		
L 34+45	61 RT	0514		557.3																																													1										1	1																																
		0514	0507		554.1	553.9			20																																																																																		
L 33+00	RT	0515	0508		557.5	556.5					24																																				1.500																																													
L 40+00	40 RT	0519		558.9																																													1			1			1																																			
		0519	0518		554.4	554.1			32																																																																																		
L 38+46	39 LT	0521		557.2																																													1	1.1		1		1																																				
		0521	0520		551.1	551.0																						20																																																														
L 38+13	39 LT	0522		557.1																																													1	0.8		1	1																																				
		0522	0521		551.3	551.1																						32																																																														
L 37+67	39 LT	0523		557.2																																													1	0.7		1			1																																			
		0523	0522		551.5	551.3																						44																																																														
L 36+90	40 LT	0524		557.6																																													1	0.2		1			1																																			
		0524	0523		552.4	552.0	0.3																				76																																																																
L 35+78	40 LT	0525		558.1																																													1	0.1		1			1																																			
		0525	0524		553.0	552.4																					112																																																															
L 34+36	37 LT	0526		559.1																																													1			1			1																																			
		0526	0525		554.1	553.3																				140																																																																	
L 38+13	60 LT	0527		555.4																																													1										1	1																																
		0527	0522		553.1	552.9			20																																																																																		
L 37+67	65 LT	0528		556.0																																													1										1	1																																
		0528	0523		553.7	553.4			24																																																																																		
L 40+77	40 RT	0529		560.3																																													1			1			1																																			
		0529	0519		557.0	554.4																										76																																																													
L 35+78	60 LT	0530		556.8																																													1										1	1																																
		0530	0525		553.6	553.3			20																																																																																			
L 34+37	67 LT	0531		556.7																																													1										1	1																															REMOVE EX DI
		0531	0526		554.4	554.1			32																																																																																		
L 39+20	39 LT	0533		557.7																																													1	0.8		1		1																																				
		0533	0532		551.9	551.5																						36																																																														
L 39+42	60 LT	0534		557.1																																													1			1	1																																				
		0534	0533		554.0	553.8			32																																																																																		
L 40+74	40 LT	0537		560.3																																													1			1		1																																				
						SHEET TOTALS			244		24															140	188	132					76					220					364				1.500		25	12.9		12	3	9	6				7	7															6															

ABBREVIATIONS

C.A.A.	CORRUGATED ALUMINIUM ALLOY
C.B.	CATCH BASIN
C.S.	CORRUGATED STEEL
D.I.	DROP INLET
G.D.I.	GRATED DROP INLET
H.D.P.E.	HIGH DENSITY POLYETHYLENE
J.B.	JUNCTION BOX
M.H.	MANHOLE
N.S.	NARROW SLOT
P.V.C.	POLYVINYL CHLORIDE
R.C.	REINFORCED CONCRETE
T.B.D.I.	TRAFFIC BEARING DROP INLET
T.B.J.B.	TRAFFIC BEARING JUNCTION BOX
W.S.	WIDE SLOT

D085709

COMPUTED BY:	SRG	DATE:	02/14/2019
CHECKED BY:	JDL	DATE:	02/14/2019

NORTH CAROLINA DEPARTMENT OF TRANSPORTATION
DIVISION OF HIGHWAYS

PROJECT NO.	SHEET NO.
R-2530B	3D-4

Note: Invert Elevations indicated are for Bid Purposes only and shall not be used for project construction stakeout.
See "Standard Specifications For Roads and Structures, Section 300-5".

LIST OF PIPES, ENDWALLS, ETC. (FOR PIPES 48 INCHES & UNDER)

LINE & STATION / SIZE / THICKNESS OR GAUGE	OFFSET	STRUCTURE NUMBER FROM	STRUCTURE NUMBER TO	TOP ELEVATION (FT.)	INVERT ELEVATION (FT.)	INVERT ELEVATION (FT.)	MINIMUM REQUIRED SLOPE (%)	Drainage Pipe (RCP, CSP, CAAP, HDPE, or PVC) 12	15	18	24	30	36	42	48	DO NOT USE RCP	DO NOT USE CSP	DO NOT USE CAAP	DO NOT USE HDPE	DO NOT USE PVC	C.S. PIPE 15 (.064)	18 (.064)	24 (.064)	30 (.079)	36 (.079)
		0537	0560		556.0	554.5	0.4																		
L 40+94	58 LT	0538		559.4																					
		0538	0537		556.6	556.4			32																
L 43+79	58 LT	0539		564.4																					
		0539	0540		561.9	561.5			28																
L 43+53	48 LT	0540		565.7																					
		0540	0545		561.2	558.0																			
L 41+77	45 LT	0545		562.3																					
		0545	0537		558.0	556.0																			
L 32+16	51 RT	0546		564.3																					
		0546	0509		558.3	558.0																			
L 32+81	66 RT	0547		563.4																					
		0547	0548		559.0	558.0			20																
L 43+62	64 RT	0551		566.1																					
		0551	0561		561.7	560.1																			
L 36+00	8 RT	0553		558.9																					
		0553	0505		554.7	554.1																			
Y2A 11+78	17 LT	0555		562.2																					
		0555	0557		558.1	557.9			28																
Y2A 11+71	17 RT	0556		562.3																					
		0556	0555		558.2	558.1																			
Y2 29+67	24 RT	0558						136																	
Y2 30+20	31 RT	0559																							
L 40+00	40 LT	0560		558.9																					
		0560	0533		554.5	552.4	0.4																		
Y2A 11+07	28 LT	0561		564.2																					
		0561	0555		560.1	558.1																			
Y2A 13+47	33 LT	0563																							
L 50+50	39 LT	0603		563.8																					
		0603	0627		559.8	555.9																			
L 52+08	9 RT	0604		561.4																					
		0604	0627		557.3	555.9																			
L 50+50	9 RT	0605		565.3																					
		0605	0606		561.3	558.8																			
L 51+50	9 RT	0606		562.8																					
		0606	0604		558.8	557.3																			
L 53+80	40 LT	0608		558.3																					
		0608	0609		554.3	554.0																			
L 54+06	40 LT	0609		558.3																					
		0609	0610		554.0	553.6																			
L 54+50	39 LT	0610		558.4																					
		0610	0621		546.9	546.4	0.6							56											
L 57+36	39 LT	0611		563.6																					
		0611	0622		557.1	553.6	0.5																		
L 57+90	60 LT	0612		563.4																					
		0612	0631		560.7	560.5			20																
L 53+80	40 RT	0614		558.3																					
		0614	0613		548.6	548.2	0.3			44															
L 54+30	39 RT	0615		558.3																					
		0615	0616		553.8	553.6																			
SHEET TOTALS								136	128	44				56											

FROM	TO	R. C. PIPE CLASS III 15	18	24	30	36	42	48	R. C. PIPE CLASS IV 15	18	24	30	36	42	48	R. C. PIPE CLASS V 15	18	30	48	15" SIDE DRAIN PIPE	18" SIDE DRAIN PIPE	24" SIDE DRAIN PIPE	ENDWALLS STD. 838.01 OR STD. 838.11 (UNLESS NOTED OTHERWISE) (CY)	DRAINAGE STRUCTURE MASONRY (CY)
0537	0560									72														
0538																								
0538	0537																							
0539																								
0539	0540																							
0540																								
0540	0545									176														
0545																								
0545	0537									104														
0546																								
0546	0509									12														
0547																								
0547	0548																							
0551																								
0551	0561								60															
0553																								
0553	0505								48															
0555																								
0555	0557																							
0556																								
0556	0555								32															
0558																								
0559																								
0560																								
0560	0533									80														
0561																								
0561	0555								68															
0563																				48				
0603																								
0603	0627								156															
0604																								
0604	0627								48															
0605																								
0605	0606								100															
0606																								
0606	0604								56															
0608																								
0608	0609								24															
0609																								
0609	0610								44															
0610																								
0610	0621																							
0611																								
0611	0622													144										
0612																								
0612	0631																							
0614																								
0614	0613																							
0615																								
0615	0616									24														
SHEET TOTALS									636	468				144						48				

QUANTITIES FOR DRAINAGE STRUCTURES — NOTE: TOTAL LIN. FT. FOR PAY QUANTITY SHALL BE A + (1.3 X B)

FROM	TO	0' THRU 5' (EACH)	A: 5' THRU 10' (LIN. FT.)	B: 10' AND ABOVE (LIN. FT.)	C.B. STD. 840.01 OR STD. 840.02	FRAME, GRATES, AND HOOD STD. 840.03 GRATE TYPE E	F	G	CONCRETE TRANSITIONAL SECTION D.I. STD. 852.04 OR STD. 852.06	C.B. STD. 852.05	OPEN THROAT C.B. STD. 840.04 OR STD. 840.05	D.I. STD. 840.14 OR STD. 840.15	D.I. FRAME AND GRATES STD. 840.16	G.D.I. TYPE "A" STD. 840.17 OR STD. 840.26	G.D.I. TYPE "B" STD. 840.18 OR STD. 840.27	G.D.I. TYPE "D" STD. 840.19 OR STD. 840.28	G.D.I. (W.S. FLAT) FRAME W/ 2 GRATES STD. 840.20	G.D.I. (W.S. SAG) FRAME W/ 2 GRATES STD. 840.22	G.D.I. (N.S. SAG) FRAME W/ 2 GRATES STD. 840.24	G.D.I. (N.S. FLAT) FRAME W/ 2 GRATES STD. 840.29	J.B. STD. 840.31 OR STD. 840.32	T.B.J.B. STD. 840.34	T.B.D.I. STD. 840.35
0537	0560																						
0538		1			1	1																	
0538	0537																						
0539		1										1	1										
0539	0540																						
0540		1			1		1																
0540	0545																						
0545		1			1		1																
0545	0537																						
0546		1	1.0		1	1																	
0546	0509																						
0547		1			1		1																
0547	0548																						
0551		1			1			1															
0551	0561																						
0553		1							1											1			1
0553	0505																						
0555		1			1			1															
0555	0557																						
0556		1			1		1																
0556	0555																						
0558																							
0559																							
0560		1			1		1																
0560	0533																						
0561		1			1			1															
0561	0555																						
0563																							
0603		1			1			1															
0603	0627																						
0604		1			1			1		1													
0604	0627																						
0605		1			1			1		1													
0605	0606																						
0606		1			1			1		1													
0606	0604																						
0608		1			1			1															
0608	0609																						
0609		1			1	1																	
0609	0610																						
0610		1	5.0	1.5			1																
0610	0621																						
0611		1	1.5				1																
0611	0622																						
0612		1													1				1				
0612	0631																						
0614		1	4.7		1		1																
0614	0613																						
0615		1			1			1															
0615	0616																						
SHEET TOTALS		23	12.2	1.5	18	3	8	9	1	3		1	1		1				1	1			1

FROM	TO	4" DRAINAGE PIPE (LIN. FT.)	SPRING BOX STD. 840.41	M.H. FRAME AND COVER STD. 840.54	ADJUST C.B.	CB STD. 840D02 (SPECIAL DETAIL)	TB2GI STD. 840D35 (SPECIAL DETAIL)	8" HDPE (LIN. FT.)	15" C.S. ELBOW	18" C.S. ELBOW	24" C.S. ELBOW	30" C.S. ELBOW	36" C.S. ELBOW	4" CONCRETE PAVED DITCH (SY)	MODIFIED CONC. FLUME	FLOWABLE FILL (CY)	CONCRETE COLLARS CL. "B" STD. 840.72 (CY)	CONCRETE AND BRICK PIPE PLUG STD. 840.71 (CY)	PIPE REMOVAL (LIN. FT.)	REMARKS
0537	0560																			
0538																				
0538	0537																			
0539																				
0539	0540																			
0540																				
0540	0545																			
0545																				
0545	0537																			
0546																				TIE TO EX 18"
0546	0509																			
0547																				
0547	0548																			
0551																				
0551	0561																			
0553																				
0553	0505																			
0555																				
0555	0557																			
0556																				
0556	0555																			
0558																				
0559															1					
0560																				
0560	0533																			
0561																				
0561	0555																			
0563																				
0603																				
0603	0627																			
0604																				
0604	0627																			
0605																				
0605	0606																			
0606																				
0606	0604																			
0608																				
0608	0609																			
0609																				
0609	0610																			
0610						1														SPECIAL DESIGN, SEE DETAIL 2C-7
0610	0621																			
0611						1														SPECIAL DESIGN, SEE DETAIL 2C-7
0611	0622																			
0612																				
0612	0631																			
0614																				
0614	0613																			
0615																				
0615	0616																			
SHEET TOTALS						2									1					

ABBREVIATIONS

C.A.A.	CORRUGATED ALUMINIUM ALLOY
C.B.	CATCH BASIN
C.S.	CORRUGATED STEEL
D.I.	DROP INLET
G.D.I.	GRATED DROP INLET
H.D.P.E.	HIGH DENSITY POLYETHYLENE
J.B.	JUNCTION BOX
M.H.	MANHOLE
N.S.	NARROW SLOT
P.V.C.	POLYVINYL CHLORIDE
R.C.	REINFORCED CONCRETE
T.B.D.I.	TRAFFIC BEARING DROP INLET
T.B.J.B.	TRAFFIC BEARING JUNCTION BOX
W.S.	WIDE SLOT

D085709

COMPUTED BY: SRG DATE: 02/14/2019

CHECKED BY: JDL DATE: 02/14/2019

PROJECT NO.	SHEET NO.
R-2530B	3D-5

NORTH CAROLINA DEPARTMENT OF TRANSPORTATION
DIVISION OF HIGHWAYS

**Note: Invert Elevations indicated are for Bid Purposes only and shall not be used for project construction stakeout.
See "Standard Specifications For Roads and Structures, Section 300-5".**

LIST OF PIPES, ENDWALLS, ETC. (FOR PIPES 48 INCHES & UNDER)

LINE & STATION	OFFSET	STRUCTURE NUMBER FROM	TO	TOP ELEVATION FT.	INVERT ELEVATION FT.	INVERT ELEVATION FT.	MINIMUM REQUIRED SLOPE %	Drainage Pipe (RCP, CSP, CAAP, HDPE, or PVC) 12	15	18	24	30	36	42	48	DO NOT USE RCP	DO NOT USE CSP	DO NOT USE CAAP	DO NOT USE HDPE	DO NOT USE PVC	C.S. PIPE 15 (.064)	18 (.064)	24 (.064)	30 (.079)	36 (.079)	R. C. PIPE CLASS III 15	18	24	30	36	42	48	R. C. PIPE CLASS IV 15	18	24	30	36	42	48	R. C. PIPE CLASS V 15	18	30	48	15" SIDE DRAIN PIPE	18" SIDE DRAIN PIPE	24" SIDE DRAIN PIPE
L 54+06	40 RT	0616		558.3																																										
		0616	0614		553.6	553.3																												24												
L 56+20	40 RT	0618		560.7																																										
		0618	0615		556.2	553.8																												188												
L 58+15	40 RT	0619		565.7																																										
		0619	0618		561.2	556.2																												196												
L 55+90	39 LT	0622		560.1																																										
		0622	0610		553.6	551.9	0.5																															140								
L 48+75	9 RT	0626		569.5																																										
		0626	0605		565.6	561.3																											176													
L 52+08	39 LT	0627		559.9																																										
		0627	0601		555.0	554.5	0.7		24																																					
L 48+82	39 LT	0628		567.9																																										
		0628	0603		563.7	559.8																											164													
L 48+15	61 LT	0629		568.3																																										
		0629	0628		564.3	563.7																											68													
L 47+30	61 LT	0630		569.2																																										
		0630	0629		565.2	564.3																											84													
L 57+90	40 LT	0631		565.0																																										
		0631	0611		558.6	557.1	0.5																															52								
L 59+60	8 LT	0701		570.4																																										
		0701	0702		566.3	565.8																											52													
L 59+84	40 RT	0702		570.1																																										
		0702	0619		565.3	561.2																												168												
		0702	0744		565.3	564.2			32																																					
L 61+75	39 LT	0704		575.0																																										
		0704	0740		568.5	566.0	0.5																															92								
L 63+39	40 LT	0705		578.9																																										
		0705	0704		573.0	569.0	0.9																														164									
L 62+05	8 RT	0706		576.7																																										
		0706	0704		572.5	571.0																											56													
L 61+37	40 RT	0707		574.1																																										
		0707	0702		569.8	565.8																											152													
L 65+00	40 RT	0708		581.6																																										
		0708	0739		577.8	575.8																											104													
L 61+75	63 LT	0709		572.7																																										
		0709	0704		569.9	569.6	0.3		24																																					
L 60+00	87 LT	0710		569.5																																										
		0710	0631		563.0	558.6	0.5																															216								
L 63+39	LT	0713	0705		576.7	575.7	0.7			20																																				
L 67+00	43 RT	0715		584.1																																										
		0715	0714		576.0	574.4			36																																					
L 67+00	39 LT	0716		584.2																																										
		0716	0705		577.2	573.0	0.6																														360									
L 70+00	40 LT	0717		588.2																																										
		0717	0730		583.9	582.2	0.8																											124												
L 71+20	39 LT	0718		590.3																																										
		0718	0717		585.9	583.9	0.7																											120												
L 71+64	39 LT	0719		590.8																																										
		0719	0718		586.8	586.2	1.5																										44													
SHEET TOTALS									116	20																							900	820			524	500								

STRUCTURE NUMBER	ENDWALLS STD. 838.01 OR STD. 838.11 (UNLESS NOTED OTHERWISE) CY	DRAINAGE STRUCTURE MASONRY CY	QUANTITIES FOR DRAINAGE STRUCTURES (NOTE: TOTAL LIN. FT. FOR PAY QUANTITY SHALL BE A + (1.3 X B)) 0' THRU 5' EACH	5' THRU 10' (A) LIN. FT.	10' AND ABOVE (B) LIN. FT.	C.B. STD. 840.01 OR STD. 840.02	FRAME, GRATES, AND HOOD STD. 840.03 GRATE TYPE E	F	G	CONCRETE TRANSITIONAL SECTION D.I. STD. 852.04 OR STD. 852.06	C.B. STD. 852.05	OPEN THROAT C.B. STD. 840.04 OR STD. 840.05	D.I. STD. 840.14 OR STD. 840.15	D.I. FRAME AND GRATES STD. 840.16	G.D.I. TYPE "A" STD. 840.17 OR STD. 840.26	G.D.I. TYPE "B" STD. 840.18 OR STD. 840.27	G.D.I. TYPE "D" STD. 840.19 OR STD. 840.28	G.D.I. (W.S. FLAT) FRAME W/ 2 GRATES STD. 840.20	G.D.I. (W.S. SAG) FRAME W/ 2 GRATES STD. 840.22	G.D.I. (N.S. SAG) FRAME W/ 2 GRATES STD. 840.24	G.D.I. (N.S. FLAT) FRAME W/ 2 GRATES STD. 840.29	J.B. STD. 840.31 OR STD. 840.32	T.B.J.B. STD. 840.34	T.B.D.I. STD. 840.35	4" DRAINAGE PIPE (LIN. FT.)	SPRING BOX STD. 840.41	M.H. FRAME AND COVER STD. 840.54	ADJUST C.B.	CB STD. 840D02 (SPECIAL DETAIL)	TB2GI STD. 840D35 (SPECIAL DETAIL)	8" HDPE (LIN. FT.)	15" C.S. ELBOW	18" C.S. ELBOW	24" C.S. ELBOW	30" C.S. ELBOW	36" C.S. ELBOW	4" CONCRETE PAVED DITCH (SY)	MODIFIED CONC. FLUME	FLOWABLE FILL CY	CONCRETE COLLARS CL. "B" STD. 840.72 CY	CONCRETE AND BRICK PIPE PLUG STD. 840.71 CY	PIPE REMOVAL LIN. FT.	REMARKS
0616			1			1	1																																				
0618			1			1			1																																		
0619			1			1			1																																		
0622			1	1.5				1																					1														SPECIAL DESIGN, SEE DETAIL 2C-7
0626			1			1			1		1																																
0627			1			1			1																																		
0628			1			1			1																																		
0629			1			1	1																																				
0630			1			1	1																																				
0631			1	1.4				1																					1														SPECIAL DESIGN, SEE DETAIL 2C-7
0701			1							1											1			1																			
0702			1			1			1																																		SEE DETAIL 63, SHEET 2D-4
0704			1	1.5				1																					1														SPECIAL DESIGN, SEE DETAIL 2C-7
0705			1	0.9		1		1																																			
0706			1							1											1			1																			
0707			1			1			1																																		
0708			1			1			1																																		
0709			1													1				1																							
0710			1	1.5				1																					1														SPECIAL DESIGN, SEE DETAIL 2C-7
0715			1	3.1		1			1																																		
0716			1	2.0		1		1																																			
0717			1			1		1																																			
0718			1			1		1																																			
0719			1			1		1																																			
SHEET TOTALS			24	11.9		17	3	9	9	2	1					1				1	2			2					4														

ABBREVIATIONS

C.A.A.	CORRUGATED ALUMINIUM ALLOY
C.B.	CATCH BASIN
C.S.	CORRUGATED STEEL
D.I.	DROP INLET
G.D.I.	GRATED DROP INLET
H.D.P.E.	HIGH DENSITY POLYETHYLENE
J.B.	JUNCTION BOX
M.H.	MANHOLE
N.S.	NARROW SLOT
P.V.C.	POLYVINYL CHLORIDE
R.C.	REINFORCED CONCRETE
T.B.D.I.	TRAFFIC BEARING DROP INLET
T.B.J.B.	TRAFFIC BEARING JUNCTION BOX
W.S.	WIDE SLOT

D085709

COMPUTED BY: SRG DATE: 02/14/2019

CHECKED BY: JDL DATE: 02/14/2019

PROJECT NO.	SHEET NO.
R-2530B	3D-6

NORTH CAROLINA DEPARTMENT OF TRANSPORTATION
DIVISION OF HIGHWAYS

Note: Invert Elevations indicated are for Bid Purposes only and shall not be used for project construction stakeout.
See "Standard Specifications For Roads and Structures, Section 300-5".

LIST OF PIPES, ENDWALLS, ETC. (FOR PIPES 48 INCHES & UNDER)

Line & Station	Offset	Structure Number From	Structure Number To	Top Elevation (FT.)	Invert Elevation (FT.)	Invert Elevation (FT.)	Minimum Required Slope (%)	Drainage Pipe (RCP, CSP, CAAP, HDPE, or PVC) 12	15	18	24	30	36	42	48	DO NOT USE RCP	DO NOT USE CSP	DO NOT USE CAAP	DO NOT USE HDPE	DO NOT USE PVC	C.S. Pipe 15 (.064)	18 (.064)	24 (.064)	30 (.079)	36 (.079)	R.C. Pipe Class III 15	18	24	30	36	42	48	R.C. Pipe Class IV 15	18	24	30	36	42	48	R.C. Pipe Class V 15	18	30	48	15" Side Drain Pipe	18" Side Drain Pipe	24" Side Drain Pipe
L 67+00	54 LT	0720		581.7																																										
		0720	0716		578.6	578.4	0.5			16																																				
Y5 13+49	21 LT	0721		586.5																																										
		0721	0729		582.6	580.5																											40													
L 71+20	60 LT	0722		590.1																																										
		0722	0718		587.4	587.0			20																																					
L 72+96	40 LT	0723		592.9																																										
		0723	0719		588.4	586.8	0.4																										132													
L 69+85	40 RT	0725		588.0																																										
		0725	0735		583.9	583.0			20																																					
L 71+50	40 RT	0726		590.6																																										
		0726	0725		586.5	583.9																											164													
Y5 13+49	21 RT	0729		584.5																																										
		0729	0730		579.3	578.8	0.7																													52										
L 68+75	40 LT	0730		586.5																																										
		0730	0743		578.3	577.8	0.4																							76																
L 72+96	60 LT	0731		591.4																																										
		0731	0723		588.6	588.4			20																																					
L 68+00	8 LT	0732		586.4																																										
		0732	0743		582.2	581.0																											32													
L 71+64	60 LT	0733		590.7																																										
		0733	0719		588.0	587.5			20																																					
L 69+85	59 RT	0735		586.0																																										
		0735	0724		583.0	582.8			36																																					
Y6 11+75	38 RT	0736		581.7																																										
		0736	0737		579.5	579.0			68																																					
L 62+00	88 RT	0738		574.7																																										
		0738	0707		570.5	569.8																											80													
L 63+93	39 RT	0739		579.9																																										
		0739	0738		575.8	570.5																											200													
L 60+84	40 LT	0740		572.7																																										
		0740	0710		566.0	563.0	0.5																															96								
L 70+05	8 RT	0741		589.1																																										
		0741	0725		585.1	583.9																											36													
L 68+00	40 LT	0743		585.5																																										
		0743	0716		577.8	577.2	0.5																							100																
Y4 13+31	20 LT	0745																																									24		
Y6 12+32	1 LT	0751	0746																																						52					
Y6 11+77	28 LT	0760																																										52	
L 74+50	40 RT	0802		595.4																																										
		0802	0801		588.8	588.0				44																																				
L 75+00	LT	0803	0802		591.0	588.8																																		124						
L 84+88	39 RT	0804		563.0																																										
		0804	0816		557.1	551.5																													240											
L 84+30	39 RT	0805		565.5																																										
		0805	0804		561.2	557.9	0.6																										56													
L 80+00	39 RT	0806		585.6																																										
		0806	0825		581.3	573.3																											168													
L 84+93	RT	0807	0804		558.1	557.6	0.4			44																																				
L 86+75	39 LT	0808		557.5																																										
							SHEET TOTALS		184	104																				176			908		240	52		96		124	52			24	52	

From	To	Endwalls STD. 838.01 or STD. 838.11 (Unless Noted Otherwise) (CY)	Drainage Structure Masonry (CY)	Quantities for Drainage Structures 0' thru 5' (EACH)	A: 5' thru 10' (LIN. FT.)	B: 10' and Above (LIN. FT.)	C.B. STD. 840.01 or STD. 840.02	Frame, Grates, and Hood STD. 840.03 Grate Type E	F	G	Concrete Transitional Section D.I. STD. 852.04 or STD. 852.06	C.B. STD. 852.05	Open Throat C.B. STD. 840.04 or STD. 840.05	D.I. STD. 840.14 or STD. 840.15	D.I. Frame and Grates STD. 840.16	G.D.I. Type "A" STD. 840.17 or STD. 840.26	G.D.I. Type "B" STD. 840.18 or STD. 840.27	G.D.I. Type "D" STD. 840.19 or STD. 840.28	G.D.I. (W.S. FLAT) Frame W/ 2 Grates STD. 840.20	G.D.I. (W.S. SAG) Frame W/ 2 Grates STD. 840.22	G.D.I. (N.S. SAG) Frame W/ 2 Grates STD. 840.24	G.D.I. (N.S. FLAT) Frame W/ 2 Grates STD. 840.29	J.B. STD. 840.31 or STD. 840.32	T.B.J.B. STD. 840.34	T.B.D.I. STD. 840.35	4" Drainage Pipe (LIN. FT.)	Spring Box STD. 840.41	M.H. Frame and Cover STD. 840.54	Adjust C.B.	CB STD. 840D02 (Special Detail)	TB2GI STD. 840D35 (Special Detail)	8" HDPE (LIN. FT.)	15" C.S. Elbow	18" C.S. Elbow	24" C.S. Elbow	30" C.S. Elbow	36" C.S. Elbow	4" Concrete Paved Ditch (SY)	Modified Conc. Flume	Flowable Fill (CY)	Concrete Collars Cl. "B" STD. 840.72 (CY)	Concrete and Brick Pipe Plug STD. 840.71 (CY)	Pipe Removal (LIN. FT.)	Remarks
0720				1													1				1																							
0720	0716																																											
0721				1													1				1																							
0721	0729																																											
0722				1										1	1																													
0722	0718																																											
0723				1			1		1																																			
0723	0719																																											
0725				1			1			1																																		
0725	0735																																											
0726				1			1			1																																		
0726	0725																																											
0729				1	0.3											1					1																							
0729	0730																																											
0730				1	3.2		1		1																																			
0730	0743																																											
0731				1										1	1																													
0731	0723																																											
0732				1							1											1			1																			
0732	0743																																											
0733				1										1	1																													
0733	0719																																											
0735				1			1	1																																				
0735	0724																																											
0736				1										1	1																													REMOVE EX DI
0736	0737																																											REMOVE EX DI
0738				1			1			1																																		
0738	0707																																											
0739				1			1			1																																		
0739	0738																																											
0740				1	1.7				1																					1														SPECIAL DESIGN, SEE DETAIL 2C-7
0740	0710																																											
0741				1							1											1			1																			
0741	0725																																											
0743				1	2.7		1		1																																			
0743	0716																																											
0745																																												
0751	0746																																											
0760																																												
0802				1	1.6		1			1																																		
0802	0801																																											
0803	0802																																											
0804				1	0.9		1		1																																			
0804	0816																																											
0805				1			1		1																																			
0805	0804																																											
0806				1			1		1																																			
0806	0825																																											
0807	0804																																											
0808				1			1			1																																		
SHEET TOTALS				23	10.4		13	1	7	6	2			4	4	1	2				3	2			2					1														

NOTE: TOTAL LIN. FT. FOR PAY QUANTITY SHALL BE A + (1.3 X B)

ABBREVIATIONS

C.A.A.	CORRUGATED ALUMINIUM ALLOY
C.B.	CATCH BASIN
C.S.	CORRUGATED STEEL
D.I.	DROP INLET
G.D.I.	GRATED DROP INLET
H.D.P.E.	HIGH DENSITY POLYETHYLENE
J.B.	JUNCTION BOX
M.H.	MANHOLE
N.S.	NARROW SLOT
P.V.C.	POLYVINYL CHLORIDE
R.C.	REINFORCED CONCRETE
T.B.D.I.	TRAFFIC BEARING DROP INLET
T.B.J.B.	TRAFFIC BEARING JUNCTION BOX
W.S.	WIDE SLOT

D085709

COMPUTED BY:	SRG	DATE:	02/14/2019
CHECKED BY:	JDL	DATE:	02/14/2019

NORTH CAROLINA DEPARTMENT OF TRANSPORTATION
DIVISION OF HIGHWAYS

PROJECT NO.	SHEET NO.
R-2530B	3D-7

Note: Invert Elevations indicated are for Bid Purposes only and shall not be used for project construction stakeout. See "Standard Specifications For Roads and Structures, Section 300-5".

LIST OF PIPES, ENDWALLS, ETC. (FOR PIPES 48 INCHES & UNDER)

LINE & STATION	OFFSET		STRUCTURE NUMBER FROM	TO	TOP ELEVATION FT.	INVERT ELEVATION FT.	INVERT ELEVATION FT.	MINIMUM REQUIRED SLOPE %	Drainage Pipe (RCP, CSP, CAAP, HDPE, or PVC) 15	R. C. PIPE CLASS III 24	R. C. PIPE CLASS IV 15	R. C. PIPE CLASS IV 18	R. C. PIPE CLASS IV 24	R. C. PIPE CLASS IV 30	QUANTITIES FOR DRAINAGE STRUCTURES 0' THRU 5' EACH	A 5' THRU 10' LIN. FT.	C.B. STD. 840.01 OR STD. 840.02	GRATE TYPE E	GRATE TYPE F	GRATE TYPE G	D.I. STD. 852.04 OR STD. 852.06	D.I. STD. 840.14 OR STD. 840.15	D.I. FRAME AND GRATES STD. 840.16	G.D.I. TYPE "B" STD. 840.18 OR STD. 840.27	G.D.I. (N.S. SAG) FRAME W/ 2 GRATES STD. 840.24	G.D.I. (N.S. FLAT) FRAME W/ 2 GRATES STD. 840.29	T.B.D.I. STD. 840.35	REMARKS
			0808	0907		552.7	546.9						264															
L 85+00	40	LT	0809		562.6										1		1			1								
			0809	0808		557.6	553.2	0.5				176																
L 83+00	40	LT	0810		571.9										1	1.0	1			1								
			0810	0819		565.9	563.5	0.6			72																	
L 79+60	39	LT	0811		587.4										1		1			1								
			0811	0818		583.2	575.1				156																	
L 86+75	59	LT	0812		556.2										1							1	1					
			0812	0808		553.9	553.5		20																			
L 85+00	61	LT	0813		560.4										1							1	1					
			0813	0809		558.2	557.9		24																			
L 83+00	67	LT	0814		568.4										1							1	1					
			0814	0810		566.2	565.9		28																			
L 87+30	39	RT	0816		556.3										1		1		1									
			0816	0902		551.5	549.8	0.3					84															
L 81+17	63	LT	0817		577.7										1							1	1					
			0817	0818		575.3	575.1		24																			
L 81+17	39	LT	0818		580.1										1		1			1								
			0818	0810		575.1	565.9	0.4			184																	
L 83+71	40	LT	0819		568.2										1		1			1								
			0819	0809		563.3	557.6	0.3				128																
L 83+71	65	LT	0820		566.0										1							1	1					
			0820	0819		563.8	563.5		24																			
L 78+95	8	LT	0821		591.0										1						1					1	1	
			0821	0811		586.7	583.2				72																	
L 79+00	87	LT	0822		589.0										1		1			1								
			0822	0811		584.7	583.2				76																	
L 83+00	7	RT	0823		572.5										1						1					1	1	
			0823	0810		568.0	567.5				44																	
L 82+45	88	RT	0824		573.1										1		1		1									
			0824	0805		568.8	561.2				192																	
L 81+70	40	RT	0825		577.6										1		1		1									
			0825	0824		573.3	568.8				88																	
L 88+15	39	RT	0902		554.5										1	2.5	1		1									SEE DETAIL 64, SHEET 2D-4
			0902	0905		547.0	545.2	0.4					176															
			0902	0901		547.0	546.5		36																			
L 90+65	8	RT	0903		550.3										1						1					1	1	
			0903	0909		545.9	545.7				28																	
L 91+30	10	LT	0904		549.9										1						1					1	1	
			0904	0930		545.3	544.8				20																	
L 89+90	39	RT	0905		550.7										1	2.1	1		1									
			0905	0911		543.6	542.7	0.3						204														
L 89+90	40	LT	0906		551.1										1	1.8	1			1								
			0906	0905		544.2	543.6			76																		
L 89+40	40	LT	0907		551.8										1		1			1								
			0907	0906		546.9	544.2						48															
L 89+90	65	LT	0908		548.0										1									1	1			
			0908	0906		545.3	545.0		28																			
L 90+91	3	LT	0909		550.1										1						1					1	1	
			0909	0904		545.7	545.3				36																	
								SHEET TOTALS	184	76	968	304	572	204	24	7.4	13		5	8	5	5	5	1	1	5	5	

ABBREVIATIONS

- C.A.A. CORRUGATED ALUMINIUM ALLOY
- C.B. CATCH BASIN
- C.S. CORRUGATED STEEL
- D.I. DROP INLET
- G.D.I. GRATED DROP INLET
- H.D.P.E. HIGH DENSITY POLYETHYLENE
- J.B. JUNCTION BOX
- M.H. MANHOLE
- N.S. NARROW SLOT
- P.V.C. POLYVINYL CHLORIDE
- R.C. REINFORCED CONCRETE
- T.B.D.I. TRAFFIC BEARING DROP INLET
- T.B.J.B. TRAFFIC BEARING JUNCTION BOX
- W.S. WIDE SLOT

D085709

COMPUTED BY: SRG DATE: 02/14/2019

CHECKED BY: JDL DATE: 02/14/2019

PROJECT NO.	SHEET NO.
R-2530B	3D-8

NORTH CAROLINA DEPARTMENT OF TRANSPORTATION
DIVISION OF HIGHWAYS

Note: Invert Elevations indicated are for Bid Purposes only and shall not be used for project construction stakeout.
See "Standard Specifications For Roads and Structures, Section 300-5".

LIST OF PIPES, ENDWALLS, ETC. (FOR PIPES 48 INCHES & UNDER)

LINE & STATION (SIZE / THICKNESS OR GAUGE)	OFFSET	STRUCTURE NUMBER FROM	STRUCTURE NUMBER TO	TOP ELEVATION FT.	INVERT ELEVATION FT.	INVERT ELEVATION FT.	MINIMUM REQUIRED SLOPE %	Drainage Pipe (RCP, CSP, CAAP, HDPE, or PVC) 12	15	18	24	30	36	42	48	DO NOT USE RCP	DO NOT USE CSP	DO NOT USE CAAP	DO NOT USE HDPE	DO NOT USE PVC	C.S. PIPE 15 .064	18 .064	24 .064	30 .079	36 .079	R. C. PIPE CLASS III 15	18	24	30	36	42	48	R. C. PIPE CLASS IV 15	18	24	30	36	42	48	R. C. PIPE CLASS V 15	18	30	48	15" SIDE DRAIN PIPE	18" SIDE DRAIN PIPE	24" SIDE DRAIN PIPE	ENDWALLS STD. 838.01 OR STD. 838.11 (UNLESS NOTED OTHERWISE) CY	DRAINAGE STRUCTURE MASONRY CY	QUANTITIES FOR DRAINAGE STRUCTURES (NOTE: TOTAL LIN. FT. FOR PAY QUANTITY SHALL BE A + (1.3 X B)) 0' THRU 5' EACH	A 5' THRU 10' LIN. FT.	B 10' AND ABOVE LIN. FT.	C.B. STD. 840.01 OR STD. 840.02	FRAME, GRATES, AND HOOD STD. 840.03 GRATE TYPE E	F	G	CONCRETE TRANSITIONAL SECTION D.I. STD. 852.04 OR STD. 852.06	C.B. STD. 852.05	OPEN THROAT C.B. STD. 840.04 OR STD. 840.05	D.I. STD. 840.14 OR STD. 840.15	D.I. FRAME AND GRATES STD. 840.16	G.D.I. TYPE "A" STD. 840.17 OR STD. 840.26	G.D.I. TYPE "B" STD. 840.18 OR STD. 840.27	G.D.I. TYPE "D" STD. 840.19 OR STD. 840.28	G.D.I. (W.S. FLAT) FRAME W/ 2 GRATES STD. 840.20	G.D.I. (W.S. SAG) FRAME W/ 2 GRATES STD. 840.22	G.D.I. (N.S. SAG) FRAME W/ 2 GRATES STD. 840.24	G.D.I. (N.S. FLAT) FRAME W/ 2 GRATES STD. 840.29	J.B. STD. 840.31 OR STD. 840.32	T.B.J.B. STD. 840.34	T.B.D.I. STD. 840.35	4" DRAINAGE PIPE (LIN. FT.)	SPRING BOX STD. 840.41	M.H. FRAME AND COVER STD. 840.54	ADJUST C.B.	CB STD. 840D02 (SPECIAL DETAIL)	TB2GI STD. 840D35 (SPECIAL DETAIL)	8" HDPE (LIN. FT.)	15" C.S. ELBOW	18" C.S. ELBOW	24" C.S. ELBOW	30" C.S. ELBOW	36" C.S. ELBOW	4" CONCRETE PAVED DITCH (SY)	MODIFIED CONC. FLUME	FLOWABLE FILL CY	CONCRETE COLLARS CL. "B" STD. 840.72 CY	CONCRETE AND BRICK PIPE PLUG STD. 840.71 CY	PIPE REMOVAL LIN. FT.	REMARKS
L 91+96	40 RT	0911		548.1																																													1	0.4		1	1																																					SEE DETAIL 65, SHEET 2D-4
		0911	0912		542.7	542.4	0.4																													8																																																						
		0911	0910		542.7	542.5			32																																																																																		
L 92+07	40 RT	0912		548.1																																													1	0.7		1			1																																		
		0912	0916		542.4	537.2	0.4																													148																																																						
L 91+96	9 LT	0913		549.6																																													1	0.6		1	1				1																																	
		0913	0911		544.0	543.5																												48																																																								
L 92+75	9 LT	0914		549.9																																													1			1			1		1																																	
		0914	0913		545.1	544.3																											76																																																									
L 94+00	40 RT	0919		549.9																																													1			1			1																																			
		0919	0918		545.5	538.4	1.0									X						48																																																												2											
L 96+27	40 RT	0920		553.0																																													1	0.8		1			1																																			
		0920	0919		547.2	545.5																												224																																																								
L 96+27	63 RT	0921		550.5																																													1													1				1																								
		0921	0920		547.5	547.2				24																																																																																		
L 95+00	10 LT	0922		552.8																																													1			1			1		1																																	
		0922	0923		548.6	547.3																											100																																																									
L 94+00	9 LT	0923		551.5																																													1			1			1		1																																	
		0923	0919		547.3	545.7																											48																																																										
L 96+35	10 LT	0924		554.6																																													1			1			1		1																																	
		0924	0920		550.1	548.8																												48																																																								
L 97+30	10 LT	0925		555.8																																													1			1			1		1																																	
		0925	0924		551.8	550.4																											96																																																											
L 93+00	67 LT	0928		547.4																																													1	0.9												1				1																								
		0928	0929		541.5	537.5				52																																																																																		
L 91+50	10 LT	0930		549.6																																													1			1		1			1																																	
		0930	0913		544.8	544.3																											44																																																										
L 99+25	10 LT	0931		557.9																																													1			1			1		1																																	
		0931	0932		553.9	553.1																											76																																																										
L 98+50	10 LT	0932		557.1																																													1			1			1		1																																	
		0932	0925		553.1	551.8																											120																																																											
L 100+50	0 CL	0933		557.7																																													1													1			1																									
		0933	1002		554.9	553.7			120																																																																																				
L 89+50	77 RT	0934	0935		542.6	542.0																																	44								6.000																																															
L 88+70	62 LT	0950																																										32																																																			
Y7 17+48	33 LT	0951																																										48																																																				
L 101+73	0 CL	1002		558.6																																													1	3.3												1			1																									
		1002	0936		550.3	544.8																									124																																																														
L 110+70	72 RT	1003		568.0																																													1													1			1																									
		1003	1013		564.5	561.3	0.5		228																																																																																					
L 102+06	38 RT	1004	1002		554.8	550.3																									100																	3.400																																																
L 103+20	76 LT	1006		558.8																																													1													1			1																									
		1006	1005		555.8	554.3				52																																																																																					
L 107+50	0 CL	1008		568.0																																													1													1			1																									
		1008	1007		564.5	564.0	0.4																											100																																																										
L 107+50	72 RT	1009		567.5																																													1														1		1																									
		1009	1008		564.9	564.5	0.3																																			72																																																			
L 113+00	72 RT	1013		564.0																																													1													1			1																									
		1013	1016		561.0	560.6	0.4																				76																																																																				
L 110+25	72 RT	1014		568.0																																													1													1			1																									
SHEET TOTALS									380	128												48					76			224			560	420		156			44		72			80			9.400		23	6.7		13	2	1	10		9					9	1		8	2													2											

ABBREVIATIONS

C.A.A.	CORRUGATED ALUMINIUM ALLOY
C.B.	CATCH BASIN
C.S.	CORRUGATED STEEL
D.I.	DROP INLET
G.D.I.	GRATED DROP INLET
H.D.P.E.	HIGH DENSITY POLYETHYLENE
J.B.	JUNCTION BOX
M.H.	MANHOLE
N.S.	NARROW SLOT
P.V.C.	POLYVINYL CHLORIDE
R.C.	REINFORCED CONCRETE
T.B.D.I.	TRAFFIC BEARING DROP INLET
T.B.J.B.	TRAFFIC BEARING JUNCTION BOX
W.S.	WIDE SLOT

COMPUTED BY:	SRG	DATE:	06/21/2019
CHECKED BY:	JDL	DATE:	06/21/2019

PROJECT NO.	SHEET NO.
R-2530B	3D-9

NORTH CAROLINA DEPARTMENT OF TRANSPORTATION
DIVISION OF HIGHWAYS

Note: Invert Elevations indicated are for Bid Purposes only and shall not be used for project construction stakeout.
See "Standard Specifications For Roads and Structures, Section 300-5".

LIST OF PIPES, ENDWALLS, ETC. (FOR PIPES 48 INCHES & UNDER)

LINE & STATION / SIZE / THICKNESS OR GAUGE	OFFSET		STRUCTURE NUMBER FROM	STRUCTURE NUMBER TO	TOP ELEVATION FT.	INVERT ELEVATION FT.	INVERT ELEVATION FT.	MINIMUM REQUIRED SLOPE %	Drainage Pipe (RCP, CSP, CAAP, HDPE, or PVC) 12	15	18	24	30	36	42	48	DO NOT USE RCP	DO NOT USE CSP	DO NOT USE CAAP	DO NOT USE HDPE	DO NOT USE PVC	C.S. PIPE 15 .064	C.S. PIPE 18 .064	C.S. PIPE 24 .064	C.S. PIPE 30 .079	C.S. PIPE 36 .079	R. C. PIPE CLASS III 15	18	24	30	36	42	48	R. C. PIPE CLASS IV 15	18	24	30	36	42	48	R. C. PIPE CLASS V 15	18	30	48	15" SIDE DRAIN PIPE	18" SIDE DRAIN PIPE	24" SIDE DRAIN PIPE	ENDWALLS STD. 838.01 OR STD. 838.11 (UNLESS NOTED OTHERWISE) CY	DRAINAGE STRUCTURE MASONRY CY	QUANTITIES FOR DRAINAGE STRUCTURES (NOTE: TOTAL LIN. FT. FOR PAY QUANTITY SHALL BE A + (1.3 X B)) 0' THRU 5' EACH	A 5' THRU 10' LIN. FT.	B 10' AND ABOVE LIN. FT.	C.B. STD. 840.01 OR STD. 840.02	FRAME, GRATES, AND HOOD STD. 840.03 GRATE TYPE E	F	G	CONCRETE TRANSITIONAL SECTION D.I. STD. 852.04 OR STD. 852.06	C.B. STD. 852.05	OPEN THROAT C.B. STD. 840.04 OR STD. 840.05	D.I. STD. 840.14 OR STD. 840.15	D.I. FRAME AND GRATES STD. 840.16	G.D.I. TYPE "A" STD. 840.17 OR STD. 840.26	G.D.I. TYPE "B" STD. 840.18 OR STD. 840.27	G.D.I. TYPE "D" STD. 840.19 OR STD. 840.28	G.D.I. (W.S. FLAT) FRAME W/ 2 GRATES STD. 840.20	G.D.I. (W.S. SAG) FRAME W/ 2 GRATES STD. 840.22	G.D.I. (N.S. SAG) FRAME W/ 2 GRATES STD. 840.24	G.D.I. (N.S. FLAT) FRAME W/ 2 GRATES STD. 840.29	J.B. STD. 840.31 OR STD. 840.32	T.B.J.B. STD. 840.34	T.B.D.I. STD. 840.35	4" DRAINAGE PIPE (LIN. FT.)	SPRING BOX STD. 840.41	M.H. FRAME AND COVER STD. 840.54	ADJUST C.B.	CB STD. 840D02 (SPECIAL DETAIL)	TB2GI STD. 840D35 (SPECIAL DETAIL)	8" HDPE (LIN. FT.)	15" C.S. ELBOW	18" C.S. ELBOW	24" C.S. ELBOW	30" C.S. ELBOW	36" C.S. ELBOW	4" CONCRETE PAVED DITCH (SY)	MODIFIED CONC. FLUME	FLOWABLE FILL CY	CONCRETE COLLARS CL. "B" STD. 840.72 CY	CONCRETE AND BRICK PIPE PLUG STD. 840.71 CY	PIPE REMOVAL LIN. FT.	REMARKS
			1014	1003		565.0	564.5	0.3		44																																																																																		
L 111+81	79	LT	1015																																								36																																												
L 113+00	3	LT	1016		565.2																																												1														1			1																						
			1016	1104		560.6	559.7	0.5			148																																																																																
L 104+79	77	LT	1017																																								48																																												
L 114+79	6	LT	1103		564.2																																												1														1			1																						
			1103	1102		559.5	559.0	0.5			96																																																																																
L 114+50	6	LT	1104		564.3																																												1														1			1																						
			1104	1103		559.7	559.5	0.5			28																																																																																
L 115+13	94	RT	1107	1124		560.0	559.5	0.4				48																																																																															
L 117+00	81	LT	1109		564.6																																												1	0.8												1				1																						
			1109	1108		558.9	558.6	0.4						52																																																																															
L 119+00	72	LT	1110		570.4																																												1	4.3												1				1																						
			1110	1109		561.1	558.9	0.3																									200																																																										
L 122+00	72	LT	1111		585.1																																												1														1			1																						
			1111	1110		580.5	567.3				300																																																																																
L 124+75	72	LT	1112		594.7																																												1														1		1																							
			1112	1111		591.7	582.1			280																																																																																	
L 119+08	5	RT	1113		574.1																																												1	5.0	2.0						1								1											1												SPECIAL DESIGN, SEE DETAIL 2C-8
			1113	1110		562.1	561.1																											76																																																										
L 120+50	9	RT	1114		578.6																																												1														1			1																						
			1114	1113		574.4	568.8																														140																																																						
L 119+00	100	LT	1115		575.6																																												1										1																															
			1115	1110		573.2	567.3														28																																																									2											
L 123+00	6	RT	1116		588.1																																												1	0.2													1			1																						
			1116	1114		582.9	574.4				248																																																																																
L 123+00	72	RT	1117		586.7																																												1														1			1																						
			1117	1116		583.7	582.9																													64																																																								
L 122+00	103	LT	1118		592.0																																												1										1																															
			1118	1111		589.6	582.1														32																																																									2											
L 124+59	129	LT	1119		616.3																																												1										1																															
			1119	1112		614.3	591.7													60																																																										2												
L 119+10	108	RT	1120	1113		562.5	562.1	0.4																						104																	2.300																																												
L 115+60	82	RT	1124		564.8																																												1	0.3																				1					1																
			1124	1123		559.5	559.0	0.4				40																																																																															
L 115+61	92	RT	1125	1124		560.7	560.5			12																																																																																	
L 134+00	80	RT	1202		573.5																																												1														1			1																						
			1202	1208		570.0	563.0	0.5			200																																																																																
L 130+00	72	RT	1203		586.9																																												1														1			1																						
			1203	1211		582.6	581.2																														72																																																						
L 130+00	150	RT	1204		617.9																																												1										1																															
			1204	1203		615.7	584.2													76																																																										2												
L 139+00	72	LT	1205		557.9																																												1	1.3												1				1																						
			1205	1303		551.6	544.3	0.4							248																																																																													
L 136+00	72	LT	1206		568.1																																												1	3.8												1				1																						
			1206	1205		559.3	551.7	0.4							300																																																																													
L 136+00	0	CL	1207		568.7																																												1	2.2													1			1																						
			1207	1206		561.5	560.8																								72																																																												
L 136+00	82	RT	1208		566.5																																												1														1			1																						
			1208	1207		563.0	562.0	1.3																						80																																																													
							SHEET TOTALS			336	1020	88		52	548								136	60					80	72	104	276			64	212												84			2.300		22	17.9	2.0						1			4			4	12		2	15			1					1			1		4	4												

ABBREVIATIONS

C.A.A.	CORRUGATED ALUMINIUM ALLOY
C.B.	CATCH BASIN
C.S.	CORRUGATED STEEL
D.I.	DROP INLET
G.D.I.	GRATED DROP INLET
H.D.P.E.	HIGH DENSITY POLYETHYLENE
J.B.	JUNCTION BOX
M.H.	MANHOLE
N.S.	NARROW SLOT
P.V.C.	POLYVINYL CHLORIDE
R.C.	REINFORCED CONCRETE
T.B.D.I.	TRAFFIC BEARING DROP INLET
T.B.J.B.	TRAFFIC BEARING JUNCTION BOX
W.S.	WIDE SLOT

D085709

COMPUTED BY:	SRG	DATE:	02/14/2019
CHECKED BY:	JDL	DATE:	02/14/2019

PROJECT NO.	SHEET NO.
R-2530B	3D-10

NORTH CAROLINA DEPARTMENT OF TRANSPORTATION
DIVISION OF HIGHWAYS

Note: Invert Elevations indicated are for Bid Purposes only and shall not be used for project construction stakeout. See "Standard Specifications For Roads and Structures, Section 300-5".

LIST OF PIPES, ENDWALLS, ETC. (FOR PIPES 48 INCHES & UNDER)

Line & Station / Size / Thickness or Gauge	Offset		Structure No. From	Structure No. To	Top Elevation (FT.)	Invert Elevation (FT.)	Invert Elevation (FT.)	Minimum Required Slope (%)	Drainage Pipe (RCP, CSP, CAAP, HDPE, or PVC) 12	15	18	24	30	36	42	48	Do Not Use RCP	Do Not Use CSP	Do Not Use CAAP	Do Not Use HDPE	Do Not Use PVC	C.S. Pipe 15 (.064)	18 (.064)	24 (.064)	30 (.079)	36 (.079)
			1209	1206		566.4	565.0				24															
L 135+50	83	LT	1210	1206		563.8	559.3								52											
L 130+00	0	CL	1211		588.6																					
			1211	1201		581.2	574.6																			
L 134+00	0	CL	1212		575.5																					
			1212	1202		572.4	570.0																			
L 130+96	80	LT	1213	1214													X	X	X	X						
L 127+55	129	RT	1215		611.7																					
			1215	1216		609.5	588.7															56				
L 127+55	72	RT	1216		591.5																					
			1216	1203		588.8	584.2			232																
L 143+18	95	LT	1302		544.3																					
			1302	1301		537.4	535.2									56										
L 141+50	72	LT	1303		550.5																					
			1303	1302		543.8	537.4									168										
L 141+50	102	LT	1304		556.8																					
			1304	1303		554.5	546.3	0.3															28			
L 143+65	0	CL	1306		547.9																					
			1306	1305		539.6	533.9																			
L 143+25	80	RT	1307	1306		545.0	539.6																			
L 144+49	56	LT	1309		550.1																					
			1309	1308		535.6	532.8								60											
L 144+48	11	LT	1310		550.9																					
			1310	1309		541.0	540.5																			
L 145+50	10	RT	1311		549.3																					
			1311	1310		542.0	541.0																			
L 152+02	90	RT	1312																							
L 148+00	56	LT	1314		551.1																					
			1314	1313		548.1	535.1															36				
L 147+80	56	LT	1315		551.1																					
			1315	1314		548.3	548.1			16																
L 151+50	11	LT	1317		551.1																					
			1317	1324		543.7	539.6																			
L 149+62	79	RT	1319	1318		544.1	534.4																			
Y8 14+10	30	RT	1320																							
Y8 14+82	30	LT	1321																							
L 151+80	15	RT	1325		553.1																					
			1325	1317		549.1	548.1																			
L 153+50	14	LT	1326		553.1																					
			1326	1316		549.5	543.7																			
L 153+00	100	LT	1328	1327		543.0	540.5																			
L 145+50	81	RT	1329	1311		543.8	542.0																			
L 144+80	56	LT	1330		550.2																					
			1330	1309		547.4	547.0			28								X	X							
L 154+50	11	RT	1331		552.0																					
			1331	1403		549.2	548.1			148																
L 157+00	9	RT	1402		552.7																					
			1402	1417		547.1	542.0	0.9																		
L 156+00	10	RT	1403		552.5																					
			1403	1402		548.1	547.3			100																
SHEET TOTALS										524	24				112	224						92	28			

Line & Station	From	To	R.C. Pipe Class III 15	18	24	30	36	42	48	R.C. Pipe Class IV 15	18	24	30	36	42	48	R.C. Pipe Class V 15	18	30	48	15" Side Drain Pipe	18" Side Drain Pipe	24" Side Drain Pipe	Endwalls Std. 838.01 or Std. 838.11 (Unless Noted Otherwise) (CY)
	1209	1206																						
L 135+50	1210	1206																						4.500
L 130+00	1211																							
	1211	1201		124																				
L 134+00	1212																							
	1212	1202		80																				
L 130+96	1213	1214																						
L 127+55	1215																							
	1215	1216																						
L 127+55	1216																							
	1216	1203																						
L 143+18	1302																							
	1302	1301																						
L 141+50	1303																							
	1303	1302																						
L 141+50	1304																							
	1304	1303																						
L 143+65	1306																							
	1306	1305					104																	
L 143+25	1307	1306					92																	3.400
L 144+49	1309																							
	1309	1308																						
L 144+48	1310																							
	1310	1309						44																
L 145+50	1311																							
	1311	1310						104																
L 152+02	1312																					48		
L 148+00	1314																							
	1314	1313																						
L 147+80	1315																							
	1315	1314																						
L 151+50	1317																							
	1317	1324	88																					
L 149+62	1319	1318						196																4.500
Y8 14+10	1320																				44			
Y8 14+82	1321																				40			
L 151+80	1325																							
	1325	1317								40														
L 153+50	1326																							
	1326	1316								88														
L 153+00	1328	1327		104																				
L 145+50	1329	1311													72									4.500
L 144+80	1330																							
	1330	1309																						
L 154+50	1331																							
	1331	1403																						
L 157+00	1402																							
	1402	1417		88																				
L 156+00	1403																							
	1403	1402																						
SHEET TOTALS			88	396			196	344		128					72						84	48		16.900

Quantities for Drainage Structures — Note: Total Lin. Ft. for Pay Quantity shall be A + (1.3 X B). Frame, Grates, and Hood Std. 840.03.

Line & Station	From	To	Drainage Structure Masonry (CY)	0' thru 5' (Each)	5' thru 10' (A) (Lin. Ft.)	10' and Above (B) (Lin. Ft.)	C.B. Std. 840.01 or Std. 840.02	Grate Type E	F	G	D.I. Std. 852.04 or Std. 852.06	C.B. Std. 852.05	Open Throat C.B. Std. 840.04 or Std. 840.05	D.I. Std. 840.14 or Std. 840.15	D.I. Frame and Grates Std. 840.16	G.D.I. Type "A" Std. 840.17 or Std. 840.26	G.D.I. Type "B" Std. 840.18 or Std. 840.27	G.D.I. Type "D" Std. 840.19 or Std. 840.28	G.D.I. (W.S. Flat) Frame w/ 2 Grates Std. 840.20	G.D.I. (W.S. Sag) Frame w/ 2 Grates Std. 840.22	G.D.I. (N.S. Sag) Frame w/ 2 Grates Std. 840.24	G.D.I. (N.S. Flat) Frame w/ 2 Grates Std. 840.29	J.B. Std. 840.31 or Std. 840.32	T.B.J.B. Std. 840.34	T.B.D.I. Std. 840.35	4" Drainage Pipe (Lin. Ft.)	Spring Box Std. 840.41	M.H. Frame and Cover Std. 840.54	Adjust C.B.	CB Std. 840D02 (Special Detail)	TB2GI Std. 840D35 (Special Detail)	8" HDPE (Lin. Ft.)	15" C.S. Elbow	18" C.S. Elbow	24" C.S. Elbow	30" C.S. Elbow	36" C.S. Elbow	4" Concrete Paved Ditch (SY)	Modified Conc. Flume	Flowable Fill (CY)	Concrete Collars Cl. "B" Std. 840.72 (CY)	Concrete and Brick Pipe Plug Std. 840.71 (CY)	Pipe Removal (Lin. Ft.)	Remarks
	1209	1206																																										
L 135+50	1210	1206																																										
L 130+00	1211			1	2.4												1			1																								
	1211	1201																																										
L 134+00	1212			1													1			1																								
	1212	1202																																										
L 130+96	1213	1214		1																							60	1																
L 127+55	1215			1										1																														
	1215	1216																																2										
L 127+55	1216			1													1			1																								
	1216	1203																																										
L 143+18	1302			1	1.9									1																														
	1302	1301																																										
L 141+50	1303			1	1.8													1		1																								
	1303	1302																																										
L 141+50	1304			1										1																														
	1304	1303																																	2									
L 143+65	1306			1	3.3												1			1																								
	1306	1305																																										
L 143+25	1307	1306																																										
L 144+49	1309			1	5.0	4.5														1											1													SPECIAL DESIGN, SEE DETAIL 2C-8
	1309	1308																																										
L 144+48	1310			1	4.9						1									1											1													SPECIAL DESIGN, SEE DETAIL 2C-8
	1310	1309																																										
L 145+50	1311			1	2.3											1				1																								
	1311	1310																																										
L 152+02	1312																																											
L 148+00	1314			1															1						1																			
	1314	1313																																2										
L 147+80	1315			1															1						1																			
	1315	1314																																										
L 151+50	1317			1	2.4												1			1																								
	1317	1324																																										
L 149+62	1319	1318																																										
Y8 14+10	1320																																											
Y8 14+82	1321																																											
L 151+80	1325			1							1								1						1																			
	1325	1317																																										
L 153+50	1326			1							1								1						1																			
	1326	1316																																										
L 153+00	1328	1327																																										
L 145+50	1329	1311																																										
L 144+80	1330			1															1						1																			
	1330	1309																																										
L 154+50	1331			1													1			1																								
	1331	1403																																										
L 157+00	1402			1	0.7												1			1																								
	1402	1417																																										
L 156+00	1403			1													1			1																								
	1403	1402																																										
SHEET TOTALS				21	24.7	4.5					3		3			2	8		5	12					5	60	1				2		4	2										

ABBREVIATIONS

C.A.A.	CORRUGATED ALUMINIUM ALLOY
C.B.	CATCH BASIN
C.S.	CORRUGATED STEEL
D.I.	DROP INLET
G.D.I.	GRATED DROP INLET
H.D.P.E.	HIGH DENSITY POLYETHYLENE
J.B.	JUNCTION BOX
M.H.	MANHOLE
N.S.	NARROW SLOT
P.V.C.	POLYVINYL CHLORIDE
R.C.	REINFORCED CONCRETE
T.B.D.I.	TRAFFIC BEARING DROP INLET
T.B.J.B.	TRAFFIC BEARING JUNCTION BOX
W.S.	WIDE SLOT

D085709

COMPUTED BY:	SRG	DATE:	02/14/2019
CHECKED BY:	JDL	DATE:	02/14/2019

PROJECT NO.	SHEET NO.
R-2530B	3D-11

NORTH CAROLINA DEPARTMENT OF TRANSPORTATION
DIVISION OF HIGHWAYS

Note: Invert Elevations indicated are for Bid Purposes only and shall not be used for project construction stakeout.
See "Standard Specifications For Roads and Structures, Section 300-5".

LIST OF PIPES, ENDWALLS, ETC. (FOR PIPES 48 INCHES & UNDER)

LINE & STATION (SIZE / THICKNESS OR GAUGE)	OFFSET	STRUCTURE NUMBER FROM	STRUCTURE NUMBER TO	TOP ELEVATION FT.	INVERT ELEVATION FT.	INVERT ELEVATION FT.	MINIMUM REQUIRED SLOPE %	Drainage Pipe (RCP, CSP, CAAP, HDPE, or PVC) 12	15	18	24	30	36	42	48	DO NOT USE RCP	DO NOT USE CSP	DO NOT USE CAAP	DO NOT USE HDPE	DO NOT USE PVC	C.S. PIPE 15 (.064)	18 (.064)	24 (.064)	30 (.079)	36 (.079)
L 157+10	106 RT	1404	1412		543.9	536.7																			
L 160+00	1 RT	1406		554.6																					
		1406	1402		551.8	547.3	1.2		300																
L 163+50	2 RT	1409		566.4																					
		1409	1406		561.2	551.8	0.7		348																
L 167+00	1 RT	1410		575.4																					
		1410	1409		572.6	563.6			348																
L 163+50	72 LT	1411		564.8																					
		1411	1409		562.0	561.2																			
L 157+35	85 LT	1412		544.4																					
		1412	1401		536.7	536.1	0.4						16												
L 158+50	72 LT	1413		550.9																					
		1413	1412		548.0	539.0	0.3		112																
L 155+81	89 RT	1414																							
L 166+50	81 RT	1416																							
L 157+00	80 LT	1417		545.9																					
		1417	1412		540.3	538.8	0.9			32															
L 171+00	7 LT	1502		585.9																					
		1502	1501		581.7	580.8																			
L 174+46	10 LT	1506		594.4																					
		1506	1502		590.0	581.7																			
L 180+00	4 RT	1508		590.7																					
		1508	1511		584.8	584.0																			
L 178+50	6 RT	1509		591.7																					
		1509	1508		588.9	586.7			152																
L 180+50	2 RT	1512		590.0																					
		1512	1508		585.3	584.8					48														
L 181+00	80 LT	1513	1512		586.5	585.3																			
L 177+44	79 RT	1551																							
L 179+02	86 RT	1552																							
L 184+50	72 RT	1602		594.2																					
		1602	1601		591.0	590.6	0.3		52																
L 185+45	87 LT	1604																							
L 186+50	72 RT	1606		595.9																					
		1606	1602		593.1	591.0																			
L 186+50	95 RT	1607		599.0																					
		1607	1606		594.1	593.1			24																
L 191+50	0 CL	1609		589.7																					
		1609	1608		584.3	581.5	0.8																		
L 191+50	83 RT	1610		588.9																					
		1610	1609		585.9	584.3	0.6																		
L 190+40	72 RT	1611		592.0																					
		1611	1610		589.2	586.0	0.4		108																
L 190+40	125 RT	1612		610.1																					
		1612	1611		607.9	589.2	0.5																52				
L 188+50	10 RT	1613		598.8																					
		1613	1609		594.5	587.0			300																
Y9 18+10	0 CL	1616	1614																						
L 188+80	72 RT	1617		594.7																					
		1617	1611		591.5	589.2			156																
SHEET TOTALS									1900	32	48		16								52				

LINE & STATION	FROM	TO	R.C. PIPE CLASS III 15	18	24	30	36	42	48	R.C. PIPE CLASS IV 15	18	24	30	36	42	48	R.C. PIPE CLASS V 15	18	30	48	15" SIDE DRAIN PIPE	18" SIDE DRAIN PIPE	24" SIDE DRAIN PIPE	ENDWALLS STD. 838.01 OR STD. 838.11 (UNLESS NOTED OTHERWISE) CY	DRAINAGE STRUCTURE MASONRY CY	QUANTITIES FOR DRAINAGE STRUCTURES (NOTE: TOTAL LIN. FT. FOR PAY QUANTITY SHALL BE A + (1.3 X B)) 0' THRU 5' EACH	A: 5' THRU 10' LIN. FT.	B: 10' AND ABOVE LIN. FT.
L 157+10	1404	1412					192																	3.400				
L 160+00	1406																									1		
	1406	1402																										
L 163+50	1409																									1	0.2	
	1409	1406																										
L 167+00	1410																									1		
	1410	1409																										
L 163+50	1411																									1		
	1411	1409	72																									
L 157+35	1412																									1	2.8	
	1412	1401																										
L 158+50	1413																									1		
	1413	1412																										
L 155+81	1414																					44						
L 166+50	1416																				32							
L 157+00	1417																									1	0.6	
	1417	1412																										
L 171+00	1502																									1		
	1502	1501								84																		
L 174+46	1506																									1		
	1506	1502								344																		
L 180+00	1508																									1	0.9	
	1508	1511			100																							
L 178+50	1509																									1		
	1509	1508																										
L 180+50	1512																									1		
	1512	1508																										
L 181+00	1513	1512			96																							
L 177+44	1551																				32							
L 179+02	1552																				32							
L 184+50	1602																									1		
	1602	1601																										
L 185+45	1604																					60						
L 186+50	1606																									1		
	1606	1602															200											
L 186+50	1607																									1		
	1607	1606																										
L 191+50	1609																									1	0.5	
	1609	1608	108																									
L 191+50	1610																									1		
	1610	1609								84																		
L 190+40	1611																									1		
	1611	1610																										
L 190+40	1612																									1		
	1612	1611																										
L 188+50	1613																									1		
	1613	1609																										
Y9 18+10	1616	1614																72										
L 188+80	1617																									1		
	1617	1611																										
SHEET TOTALS			180		196		192			512							200	72			96	104		3.400		21	5.0	

LINE & STATION	FROM	TO	C.B. STD. 840.01 OR STD. 840.02	FRAME, GRATES, AND HOOD STD. 840.03 GRATE TYPE E	F	G	CONCRETE TRANSITIONAL SECTION D.I. STD. 852.04 OR STD. 852.06	C.B. STD. 852.05	OPEN THROAT C.B. STD. 840.04 OR STD. 840.05	D.I. STD. 840.14 OR STD. 840.15	D.I. FRAME AND GRATES STD. 840.16	G.D.I. TYPE "A" STD. 840.17 OR STD. 840.26	G.D.I. TYPE "B" STD. 840.18 OR STD. 840.27	G.D.I. TYPE "D" STD. 840.19 OR STD. 840.28	G.D.I. (W.S. FLAT) FRAME W/ 2 GRATES STD. 840.20	G.D.I. (W.S. SAG) FRAME W/ 2 GRATES STD. 840.22	G.D.I. (N.S. SAG) FRAME W/ 2 GRATES STD. 840.24	G.D.I. (N.S. FLAT) FRAME W/ 2 GRATES STD. 840.29	J.B. STD. 840.31 OR STD. 840.32	T.B.J.B. STD. 840.34	T.B.D.I. STD. 840.35	4" DRAINAGE PIPE (LIN. FT.)	SPRING BOX STD. 840.41	M.H. FRAME AND COVER STD. 840.54	ADJUST C.B.	CB STD. 840D02 (SPECIAL DETAIL)	TB2GI STD. 840D35 (SPECIAL DETAIL)	8" HDPE (LIN. FT.)	15" C.S. ELBOW	18" C.S. ELBOW	24" C.S. ELBOW	30" C.S. ELBOW	36" C.S. ELBOW	4" CONCRETE PAVED DITCH (SY)	MODIFIED CONC. FLUME	FLOWABLE FILL CY	CONCRETE COLLARS CL. "B" STD. 840.72 CY	CONCRETE AND BRICK PIPE PLUG STD. 840.71 CY	PIPE REMOVAL LIN. FT.	REMARKS
L 157+10	1404	1412																																						
L 160+00	1406												1			1																								
	1406	1402																																						
L 163+50	1409												1			1																								
	1409	1406																																						
L 167+00	1410												1			1																								
	1410	1409																																						
L 163+50	1411												1			1																								
	1411	1409																																						
L 157+35	1412																		1					1																
	1412	1401																																						
L 158+50	1413												1			1																								
	1413	1412																																						
L 155+81	1414																																							
L 166+50	1416																																							
L 157+00	1417																		1					1																
	1417	1412																																						
L 171+00	1502												1			1																								
	1502	1501																																						
L 174+46	1506						1								1						1																			
	1506	1502																																						
L 180+00	1508											1				1																								
	1508	1511																																						
L 178+50	1509												1			1																								
	1509	1508																																						
L 180+50	1512											1				1																								
	1512	1508																																						
L 181+00	1513	1512																																						
L 177+44	1551																																							
L 179+02	1552																																							
L 184+50	1602												1			1																								
	1602	1601																																						
L 185+45	1604																																							
L 186+50	1606												1			1																								
	1606	1602																																						
L 186+50	1607								1																															
	1607	1606																																						
L 191+50	1609												1			1																								
	1609	1608																																						
L 191+50	1610												1			1																								
	1610	1609																																						
L 190+40	1611												1			1																								
	1611	1610																																						
L 190+40	1612								1																															
	1612	1611																											2											
L 188+50	1613						1								1						1																			
	1613	1609																																						
Y9 18+10	1616	1614																																						
L 188+80	1617												1			1																								
	1617	1611																																						
SHEET TOTALS							2		2			2	13		2	15			2		2			2					2											

ABBREVIATIONS

- **C.A.A.** CORRUGATED ALUMINIUM ALLOY
- **C.B.** CATCH BASIN
- **C.S.** CORRUGATED STEEL
- **D.I.** DROP INLET
- **G.D.I.** GRATED DROP INLET
- **H.D.P.E.** HIGH DENSITY POLYETHYLENE
- **J.B.** JUNCTION BOX
- **M.H.** MANHOLE
- **N.S.** NARROW SLOT
- **P.V.C.** POLYVINYL CHLORIDE
- **R.C.** REINFORCED CONCRETE
- **T.B.D.I.** TRAFFIC BEARING DROP INLET
- **T.B.J.B.** TRAFFIC BEARING JUNCTION BOX
- **W.S.** WIDE SLOT

COMPUTED BY:	SRG	DATE:	02/14/2019
CHECKED BY:	JDL	DATE:	02/14/2019

PROJECT NO.	SHEET NO.
R-2530B	3D-12

NORTH CAROLINA DEPARTMENT OF TRANSPORTATION
DIVISION OF HIGHWAYS

Note: Invert Elevations indicated are for Bid Purposes only and shall not be used for project construction stakeout.
See "Standard Specifications For Roads and Structures, Section 300-5".

LIST OF PIPES, ENDWALLS, ETC. (FOR PIPES 48 INCHES & UNDER)

LINE & STATION (SIZE / THICKNESS OR GAUGE)	OFFSET	STRUCTURE NUMBER FROM	STRUCTURE NUMBER TO	TOP ELEVATION FT.	INVERT ELEVATION FT.	INVERT ELEVATION FT.	MINIMUM REQUIRED SLOPE %	Drainage Pipe (RCP, CSP, CAAP, HDPE, or PVC) 12	15	18	24	30	36	42	48	DO NOT USE RCP	DO NOT USE CSP	DO NOT USE CAAP	DO NOT USE HDPE	DO NOT USE PVC	C.S. PIPE 15 (.064)	18 (.064)	24 (.064)	30 (.079)	36 (.079)	R. C. PIPE CLASS III 15	18	24	30	36	42	48	R. C. PIPE CLASS IV 15	18	24	30	36	42	48	R. C. PIPE CLASS V 15	18	30	48	15" SIDE DRAIN PIPE	18" SIDE DRAIN PIPE	24" SIDE DRAIN PIPE	ENDWALLS STD. 838.01 OR STD. 838.11 (UNLESS NOTED OTHERWISE) CY	DRAINAGE STRUCTURE MASONRY CY	QUANTITIES FOR DRAINAGE STRUCTURES (NOTE: TOTAL LIN. FT. FOR PAY QUANTITY SHALL BE A + (1.3 X B)) 0' THRU 5' EACH	A 5' THRU 10' LIN. FT.	B 10' AND ABOVE LIN. FT.	C.B. STD. 840.01 OR STD. 840.02	FRAME, GRATES, AND HOOD STD. 840.03 GRATE TYPE E	F	G	CONCRETE TRANSITIONAL SECTION D.I. STD. 852.04 OR STD. 852.06	C.B. STD. 852.05	OPEN THROAT C.B. STD. 840.04 OR STD. 840.05	D.I. STD. 840.14 OR STD. 840.15	D.I. FRAME AND GRATES STD. 840.16	G.D.I. TYPE "A" STD. 840.17 OR STD. 840.26	G.D.I. TYPE "B" STD. 840.18 OR STD. 840.27	G.D.I. TYPE "D" STD. 840.19 OR STD. 840.28	G.D.I. (W.S. FLAT) FRAME W/ 2 GRATES STD. 840.20	G.D.I. (W.S. SAG) FRAME W/ 2 GRATES STD. 840.22	G.D.I. (N.S. SAG) FRAME W/ 2 GRATES STD. 840.24	G.D.I. (N.S. FLAT) FRAME W/ 2 GRATES STD. 840.29	J.B. STD. 840.31 OR STD. 840.32	T.B.J.B. STD. 840.34	T.B.D.I. STD. 840.35	4" DRAINAGE PIPE (LIN. FT.)	SPRING BOX STD. 840.41	M.H. FRAME AND COVER STD. 840.54	ADJUST C.B.	CB STD. 840D02 (SPECIAL DETAIL)	TB2GI STD. 840D35 (SPECIAL DETAIL)	8" HDPE (LIN. FT.)	15" C.S. ELBOW	18" C.S. ELBOW	24" C.S. ELBOW	30" C.S. ELBOW	36" C.S. ELBOW	4" CONCRETE PAVED DITCH (SY)	MODIFIED CONC. FLUME	FLOWABLE FILL CY	CONCRETE COLLARS CL. "B" STD. 840.72 CY	CONCRETE AND BRICK PIPE PLUG STD. 840.71 CY	PIPE REMOVAL LIN. FT.	REMARKS
L 186+50	8 LT	1618		597.8																																													1													1			1																								
		1618	1606		595.0	593.1																												80																																																										
Y10 10+92	0 CL	1701	1704		574.5	570.4																						112																																																																		
L 197+92	56 LT	1702		579.8																																													1	1.4															1						1																					
		1702	1730		573.4	572.3			104								X	X																																																																										
L 197+35	56 LT	1703		579.6																																													1																1						1																					
		1703	1702		575.5	574.5			56								X	X																																																																									
L 197+00	0 CL	1705		577.4																																													1													1			1																								
		1705	1707		574.7	573.8			92																																																																																					
L 201+57	79 LT	1706																																										32																																																		
L 197+92	15 LT	1707		580.5																																													1	1.7							1								1						1																					
		1707	1702		573.8	573.4																					40																																																																				
L 199+00	9 RT	1708		579.9																																													1	5.0	0.7												1			1																								
		1708	1730		569.2	568.6																								64																																																																
L 199+00	91 RT	1710	1708		570.0	569.2																								84																																																																
L 200+00	72 LT	1712		580.4																																													1													1			1																								
		1712	1730		577.7	576.7			100																																																																																			
L 209+50	72 RT	1713		564.3																																													1	0.3													1			1																								
		1713	1731		559.0	558.5	0.5		52																																																																																			
L 208+00	72 RT	1714		574.2																																													1													1			1																								
		1714	1713		571.2	561.3	0.4		152																																																																																
L 206+00	72 RT	1715		583.6																																													1													1			1																								
		1715	1714		580.6	571.2			204																																																																																	
L 203+50	72 RT	1716		586.5																																													1													1			1																								
		1716	1715		583.8	580.8			252																																																																																		
L 208+00	90 RT	1717	1714		576.9	571.5	0.4														20																																																												1					11						
L 203+50	130 RT	1718		606.7																																													1									1																																						
		1718	1716		604.5	583.8															56																																																										2											
L 208+50	72 LT	1719		566.7																																													1												1				1																								
		1719	1804		561.9	537.8	0.5				336																																																																																
L 206+83	70 LT	1720		575.7																																													1												1				1																								
		1720	1719		570.9	561.9	0.4				160																																																																															
L 206+26	1 RT	1721		583.5																																													1	1.0							1								1						1																					
		1721	1726		577.5	573.0																					76																																																																					
L 206+42	19 RT	1722		582.4																																													1								1								1						1																					
		1722	1721		578.2	577.5			28																																																																																				
L 205+50	8 LT	1723		583.7																																													1													1			1																								
		1723	1721		580.9	579.0																												72																																																														
L 206+50	72 LT	1726		577.2																																													1												1				1																								
		1726	1720		572.5	571.4	0.4				32																																																																																
L 205+00	94 LT	1727		581.8																																													1													1			1																								
		1727	1726		578.8	573.0	0.5																												144																																																													
L 204+84	112 LT	1728	1727		585.0	578.8	0.9															24																																																											1			11						
L 198+50	9 RT	1729		579.3																																													1													1			1																								
		1729	1708		576.6	576.1			48																																																																																		
L 199+00	56 LT	1730		581.0																																													1	5.0	2.9															1						1																					
		1730	1709		568.1	562.0	0.3																		56																																																									2							
L 215+50	72 LT	1803		519.1																																													1	5.0	0.1										1				1																								
		1803	1802		508.9	508.3	0.5					64																																																																																
L 212+00	72 LT	1804		542.5																																													1	0.3											1				1																								
SHEET TOTALS									1088		528	64									76	24			56	116		112	148					152	144											32					23	19.7	3.7					3		1			5	11		6	16					6								3	1			2	22						

ABBREVIATIONS

C.A.A.	CORRUGATED ALUMINIUM ALLOY
C.B.	CATCH BASIN
C.S.	CORRUGATED STEEL
D.I.	DROP INLET
G.D.I.	GRATED DROP INLET
H.D.P.E.	HIGH DENSITY POLYETHYLENE
J.B.	JUNCTION BOX
M.H.	MANHOLE
N.S.	NARROW SLOT
P.V.C.	POLYVINYL CHLORIDE
R.C.	REINFORCED CONCRETE
T.B.D.I.	TRAFFIC BEARING DROP INLET
T.B.J.B.	TRAFFIC BEARING JUNCTION BOX
W.S.	WIDE SLOT

D085709

D085709

COMPUTED BY:	SRG	DATE:	02/14/2019
CHECKED BY:	JDL	DATE:	02/14/2019

NORTH CAROLINA DEPARTMENT OF TRANSPORTATION
DIVISION OF HIGHWAYS

PROJECT NO.	SHEET NO.
R-2530B	3D-13

**Note: Invert Elevations indicated are for Bid Purposes only and shall not be used for project construction stakeout.
See "Standard Specifications For Roads and Structures, Section 300-5".**

LIST OF PIPES, ENDWALLS, ETC. (FOR PIPES 48 INCHES & UNDER)

LINE & STATION / SIZE / THICKNESS OR GAUGE	OFFSET		STRUCTURE NUMBER FROM	STRUCTURE NUMBER TO	TOP ELEVATION FT.	INVERT ELEVATION FT.	INVERT ELEVATION FT.	MINIMUM REQUIRED SLOPE %	Drainage Pipe (RCP, CSP, CAAP, HDPE, or PVC) 12	15	18	24	30	36	42	48	DO NOT USE RCP	DO NOT USE CSP	DO NOT USE CAAP	DO NOT USE HDPE	DO NOT USE PVC	C.S. PIPE 15 (.064)	18 (.064)	24 (.064)	30 (.079)	36 (.079)
			1804	1803		537.3	514.3	0.3					336													
L 215+50	0	CL	1805		520.3																					
			1805	1803		517.5	515.1																			
L 212+00	0	CL	1806		544.2																					
			1806	1804		541.4	538.5																			
L 212+00	106	LT	1807		550.0																					
			1807	1804		547.5	538.3	0.4														32				
L 219+30	57	RT	1809		503.7																					
			1809	1808		499.5	484.0															48				
L 221+00	0	CL	1810		494.7																					
			1810	1811		490.6	490.0	0.5																		
L 221+00	57	RT	1811		496.9																					
			1811	1906		490.0	480.6	0.6		300								X	X							
L 221+00	72	LT	1812		494.1																					
			1812	1810		491.3	490.6																			
L 217+11	85	LT	1814	1813		501.5	482.5																			
L 222+84	91	LT	1815																							
L 225+00	96	LT	1903	1905		469.9	468.4	0.9																		
L 225+00	57	RT	1905		478.3																					
			1905	1910		468.4	458.5	0.5					228					X	X							
L 224+00	57	RT	1906		483.6																					
			1906	1905		480.6	474.1	0.4			100							X	X							
L 228+45	77	RT	1908		457.4																					
			1908	1907		447.4	445.0	2.3																	52	
L 227+83	88	RT	1909		460.9																					
			1909	1908		455.1	451.6	0.6					60					X	X							
L 227+30	57	RT	1910		464.7																					
			1910	1909		456.9	455.1	0.5																		
L 227+00	0	CL	1913		464.3																					
			1913	1910		458.8	456.9																			
L 233+50	2	LT	1915		435.4																					
			1915	1914		430.0	429.7																			
L 232+00	5	RT	1916		439.4																					
			1916	1915		436.4	432.4			148																
L 230+00	80	LT	1917		445.0																					
			1917	1918		442.6	430.6	1.1		340																
L 233+40	72	LT	1918		433.6																					
			1918	1915		430.6	430.0																			
L 237+00	57	RT	1919		431.8																					
			1919	2004		427.6	426.8			164								X	X							
L 238+66	57	RT	2004		431.0																					
			2004	2003		422.0	414.0	5.7														40				
L 239+80	57	RT	2005		430.6																					
			2005	2004		423.1	422.0	0.6		112								X	X							
L 240+06	57	RT	2006		430.6																					
			2006	2005		423.4	423.1	0.5		24								X	X							
L 240+06	0	CL	2007		428.2																					
			2007	2006		424.0	423.4	0.4																		
L 240+06	72	LT	2008		427.7																					
			2008	2007		424.7	424.0																			
SHEET TOTALS										1088	100		624									120			52	

FROM	TO	R. C. PIPE CLASS III 15	18	24	30	36	42	48	R. C. PIPE CLASS IV 15	18	24	30	36	42	48	R. C. PIPE CLASS V 15	18	30	48	15" SIDE DRAIN PIPE	18" SIDE DRAIN PIPE	24" SIDE DRAIN PIPE	ENDWALLS STD. 838.01 OR STD. 838.11 (UNLESS NOTED OTHERWISE) CY	DRAINAGE STRUCTURE MASONRY CY
1804	1803																							
1805																								
1805	1803	72																						
1806																								
1806	1804	72																						
1807																								
1807	1804																							
1809																								
1809	1808																							
1810																								
1810	1811	56																						
1811																								
1811	1906																							
1812																								
1812	1810	72																						
1814	1813							268															6.000	
1815																				68				
1903	1905			152																				
1905																								
1905	1910																							
1906																								
1906	1905																							
1908																								
1908	1907																							
1909																								
1909	1908																							
1910																								
1910	1909											60												
1913																								
1913	1910			64																				
1915																								
1915	1914			96																				
1916																								
1916	1915																							
1917																								
1917	1918																							
1918																								
1918	1915			72																				
1919																								
1919	2004																							
2004																								
2004	2003																							
2005																								
2005	2004																							
2006																								
2006	2005																							
2007																								
2007	2006	56																						
2008																								
2008	2007	72																						
SHEET TOTALS		400		384				268				60								68			6.000	

FROM	TO	QUANTITIES FOR DRAINAGE STRUCTURES (NOTE: TOTAL LIN. FT. FOR PAY QUANTITY SHALL BE A + (1.3 X B)) 0' THRU 5' EACH	A 5' THRU 10' LIN. FT.	B 10' AND ABOVE LIN. FT.	C.B. STD. 840.01 OR STD. 840.02	FRAME, GRATES, AND HOOD STD. 840.03 GRATE TYPE E	F	G	CONCRETE TRANSITIONAL SECTION D.I. STD. 852.04 OR STD. 852.06	C.B. STD. 852.05	OPEN THROAT C.B. STD. 840.04 OR STD. 840.05	D.I. STD. 840.14 OR STD. 840.15	D.I. FRAME AND GRATES STD. 840.16	G.D.I. TYPE "A" STD. 840.17 OR STD. 840.26	G.D.I. TYPE "B" STD. 840.18 OR STD. 840.27	G.D.I. TYPE "D" STD. 840.19 OR STD. 840.28	G.D.I. (W.S. FLAT) FRAME W/ 2 GRATES STD. 840.20	G.D.I. (W.S. SAG) FRAME W/ 2 GRATES STD. 840.22	G.D.I. (N.S. SAG) FRAME W/ 2 GRATES STD. 840.24	G.D.I. (N.S. FLAT) FRAME W/ 2 GRATES STD. 840.29	J.B. STD. 840.31 OR STD. 840.32	T.B.J.B. STD. 840.34	T.B.D.I. STD. 840.35
1804	1803																						
1805		1													1			1					
1805	1803																						
1806		1													1			1					
1806	1804																						
1807		1									1												
1807	1804																						
1809		1															1						1
1809	1808																						
1810		1													1			1					
1810	1811																						
1811		1	1.9														1						1
1811	1906																						
1812		1													1			1					
1812	1810																						
1814	1813																						
1815																							
1903	1905																						
1905		1	4.9														1						
1905	1910																						
1906		1															1						1
1906	1905																						
1908		1	5.0														1						
1908	1907																						
1909		1	0.8														1						
1909	1908																						
1910		1	2.8														1						
1910	1909																						
1913		1	0.5												1			1					
1913	1910																						
1915		1	0.4												1			1					
1915	1914																						
1916		1													1			1					
1916	1915																						
1917		1									1												
1917	1918																						
1918		1														1		1					
1918	1915																						
1919		1															1						1
1919	2004																						
2004		1	4.0														1						1
2004	2003																						
2005		1	2.5														1						1
2005	2004																						
2006		1	2.2														1						1
2006	2005																						
2007		1													1			1					
2007	2006																						
2008		1													1			1					
2008	2007																						
SHEET TOTALS		23	25.0								2				9	1	11	10					7

FROM	TO	4" DRAINAGE PIPE (LIN. FT.)	SPRING BOX STD. 840.41	M.H. FRAME AND COVER STD. 840.54	ADJUST C.B.	CB STD. 840D02 (SPECIAL DETAIL)	TB2GI STD. 840D35 (SPECIAL DETAIL)	8" HDPE (LIN. FT.)	15" C.S. ELBOW	18" C.S. ELBOW	24" C.S. ELBOW	30" C.S. ELBOW	36" C.S. ELBOW	4" CONCRETE PAVED DITCH (SY)	MODIFIED CONC. FLUME	FLOWABLE FILL CY	CONCRETE COLLARS CL. "B" STD. 840.72 CY	CONCRETE AND BRICK PIPE PLUG STD. 840.71 CY	PIPE REMOVAL LIN. FT.	REMARKS
1804	1803																			
1805																				
1805	1803																			
1806																				
1806	1804																			
1807																				
1807	1804								2											
1809																				
1809	1808								2											
1810																				
1810	1811																			
1811																				
1811	1906																			
1812																				
1812	1810																			
1814	1813																			
1815																				
1903	1905																			
1905							1													SPECIAL DESIGN, SEE DETAIL 2C-8
1905	1910																			
1906																				
1906	1905																			
1908							1													SPECIAL DESIGN, SEE DETAIL 2C-8
1908	1907											2								
1909							1													SPECIAL DESIGN, SEE DETAIL 2C-8
1909	1908																			
1910							1													SPECIAL DESIGN, SEE DETAIL 2C-8
1910	1909																			
1913																				
1913	1910																			
1915																				
1915	1914																			
1916																				
1916	1915																			
1917																				
1917	1918																			
1918																				
1918	1915																			
1919																				
1919	2004																			
2004																				
2004	2003								2											
2005																				
2005	2004																			
2006																				
2006	2005																			
2007																				
2007	2006																			
2008																				
2008	2007																			
SHEET TOTALS							4		6			2								

ABBREVIATIONS

C.A.A.	CORRUGATED ALUMINIUM ALLOY
C.B.	CATCH BASIN
C.S.	CORRUGATED STEEL
D.I.	DROP INLET
G.D.I.	GRATED DROP INLET
H.D.P.E.	HIGH DENSITY POLYETHYLENE
J.B.	JUNCTION BOX
M.H.	MANHOLE
N.S.	NARROW SLOT
P.V.C.	POLYVINYL CHLORIDE
R.C.	REINFORCED CONCRETE
T.B.D.I.	TRAFFIC BEARING DROP INLET
T.B.J.B.	TRAFFIC BEARING JUNCTION BOX
W.S.	WIDE SLOT

D085709

COMPUTED BY:	SRG	DATE:	02/14/2019
CHECKED BY:	JDL	DATE:	02/14/2019

NORTH CAROLINA DEPARTMENT OF TRANSPORTATION
DIVISION OF HIGHWAYS

PROJECT NO.	SHEET NO.
R-2530B	3D-14

Note: Invert Elevations indicated are for Bid Purposes only and shall not be used for project construction stakeout.
See "Standard Specifications For Roads and Structures, Section 300-5".

LIST OF PIPES, ENDWALLS, ETC. (FOR PIPES 48 INCHES & UNDER)

LINE & STATION / SIZE / THICKNESS OR GAUGE	OFFSET		STRUCTURE NUMBER FROM	STRUCTURE NUMBER TO	TOP ELEVATION FT.	INVERT ELEVATION FT.	INVERT ELEVATION FT.	MINIMUM REQUIRED SLOPE %
L 238+37	15	RT	2009		432.0			
			2009	2004		426.7	425.9	
L 237+75	10	LT	2010		430.4			
			2010	2009		427.4	426.7	
Y11 16+02	27	RT	2011					
L 243+31	0	CL	2013		429.5			
			2013	2012		420.8	416.8	0.3
L 243+00	91	LT	2014	2013		424.5	420.8	
L 251+00	72	RT	2015		423.0			
			2015	2101		419.0	417.0	
L 251+00	0	CL	2016		424.2			
			2016	2103		418.9	413.0	
L 250+70	90	LT	2017	2016		420.5	418.9	
L 253+00	0	CL	2103		418.3			
			2103	2102		412.5	411.3	0.3
L 253+00	82	LT	2104	2103		416.5	413.5	0.4
L 256+67	7	LT	2106		414.3			
			2106	2126		409.3	408.7	
L 256+67	72	LT	2107		413.4			
			2107	2106		410.0	409.3	
L 257+00	72	LT	2108		413.5			
			2108	2107		410.5	410.2	
L 257+00	7	LT	2109		414.9			
			2109	2106		411.9	411.5	
L 264+11	79	RT	2112					
L 259+60	104	LT	2118	2116		406.1	402.6	
L 260+50	10	LT	2119		423.0			
			2119	2110		418.3	414.1	0.5
L 261+70	3	LT	2120		430.4			
			2120	2119		425.6	418.5	
L 262+50	10	RT	2123		432.3			
			2123	2120		428.0	425.6	
L 261+00	106	LT	2125		422.5			
			2125	2119		419.8	418.5	1.2
L 256+00	6	LT	2126		414.8			
			2126	2105		408.7	407.5	
L 261+36	89	RT	2127					
L 265+14	76	RT	2128					
L 276+00	11	RT	2202		410.0			
			2202	2214		401.7	399.6	0.4
			2202	2201		401.7	397.7	
L 275+47	15	LT	2203		412.6			
			2203	2202		405.3	404.8	0.6
L 274+25	0	CL	2204		411.5			
			2204	2203		406.8	405.3	0.6
L 272+00	0	CL	2205		418.6			
			2205	2204		413.1	406.8	0.4
L 269+00	1	LT	2206		432.0			
			2206	2205		428.7	413.6	
L 269+00	72	RT	2207		432.2			
SHEET TOTALS								

FROM	TO	Drainage Pipe (RCP, CSP, CAAP, HDPE, or PVC)								DO NOT USE RCP	DO NOT USE CSP	DO NOT USE CAAP	DO NOT USE HDPE	DO NOT USE PVC	C.S. PIPE					R. C. PIPE CLASS III							R. C. PIPE CLASS IV							R. C. PIPE CLASS V				15" SIDE DRAIN PIPE	18" SIDE DRAIN PIPE	24" SIDE DRAIN PIPE	ENDWALLS STD. 838.01 OR STD. 838.11 (UNLESS NOTED OTHERWISE)
		12	15	18	24	30	36	42	48						15 (.064)	18 (.064)	24 (.064)	30 (.079)	36 (.079)	15	18	24	30	36	42	48	15	18	24	30	36	42	48	15	18	30	48				CY
2009	2004																			52																					
2010	2009																			64																					
2011																																						44			
2013	2012																						108																		
2014	2013																						96																		
2015	2101		52																																						
2016	2103					196																																			
2017	2016																						96																		
2103	2102																														92										
2104	2103																					84																			
2106	2126			64																																					
2107	2106																				64																				
2108	2107		32																																						
2109	2106		32																																						
2112																											44														
2118	2116																									236															6.000
2119	2110																				104																				
2120	2119																			120																					
2123	2120																										80														
2125	2119																			108																					
2126	2105																				92																				
2127																																						32			
2128																																						64			
2202	2214					148																																			
2202	2201																			108																					
2203	2202																					56																			
2204	2203																					120																			
2205	2204				224																																				
2206	2205		296																																						
SHEET TOTALS			412	64	224	344														452	260	260	300			236	124				92							140			6.000

FROM	DRAINAGE STRUCTURE MASONRY CY	QUANTITIES FOR DRAINAGE STRUCTURES (NOTE: TOTAL LIN. FT. FOR PAY QUANTITY SHALL BE A + (1.3 X B)) 0' THRU 5' EACH	A 5' THRU 10' LIN. FT.	B 10' AND ABOVE LIN. FT.	C.B. STD. 840.01 OR STD. 840.02	FRAME, GRATES, AND HOOD STD. 840.03 GRATE TYPE E	F	G	CONCRETE TRANSITIONAL SECTION D.I. STD. 852.04 OR STD. 852.06	C.B. STD. 852.05	OPEN THROAT C.B. STD. 840.04 OR STD. 840.05	D.I. STD. 840.14 OR STD. 840.15	D.I. FRAME AND GRATES STD. 840.16	G.D.I. TYPE "A" STD. 840.17 OR STD. 840.26	G.D.I. TYPE "B" STD. 840.18 OR STD. 840.27	G.D.I. TYPE "D" STD. 840.19 OR STD. 840.28	G.D.I. (W.S. FLAT) FRAME W/ 2 GRATES STD. 840.20	G.D.I. (W.S. SAG) FRAME W/ 2 GRATES STD. 840.22	G.D.I. (N.S. SAG) FRAME W/ 2 GRATES STD. 840.24	G.D.I. (N.S. FLAT) FRAME W/ 2 GRATES STD. 840.29	J.B. STD. 840.31 OR STD. 840.32	T.B.J.B. STD. 840.34	T.B.D.I. STD. 840.35	4" DRAINAGE PIPE (LIN. FT.)	SPRING BOX STD. 840.41	M.H. FRAME AND COVER STD. 840.54	ADJUST C.B.	CB STD. 840D02 (SPECIAL DETAIL)	TB2GI STD. 840D35 (SPECIAL DETAIL)	8" HDPE (LIN. FT.)	15" C.S. ELBOW	18" C.S. ELBOW	24" C.S. ELBOW	30" C.S. ELBOW	36" C.S. ELBOW	4" CONCRETE PAVED DITCH (SY)	MODIFIED CONC. FLUME	FLOWABLE FILL CY	CONCRETE COLLARS CL. "B" STD. 840.72 CY	CONCRETE AND BRICK PIPE PLUG STD. 840.71 CY	PIPE REMOVAL LIN. FT.	REMARKS
2009		1	0.3						1								1						1																			
2010		1													1			1																								
2013		1	3.8												1			1																								
2015		1													1			1																								
2016		1	0.3											1				1																								
2103		1	0.8											1				1																								
2106		1													1			1																								
2107		1													1			1																								
2108		1													1			1																								
2109		1													1			1																								
2119		1													1			1																								
2120		1							1								1						1																			
2123		1													1			1																								
2125		1													1			1																								
2126		1	1.1												1			1																								
2202		1	3.3											1				1																								SEE DETAIL 71, SHEET 2D-5
2203		1	2.3						1								1												1													SPECIAL DESIGN, SEE DETAIL 2C-8
2204		1												1				1																								
2205		1	0.5											1				1																								
2206		1													1			1																								
2207		1													1			1																								
SHEET TOTALS		21	12.4						3					5	13		3	18					2						1													

ABBREVIATIONS

C.A.A.	CORRUGATED ALUMINIUM ALLOY
C.B.	CATCH BASIN
C.S.	CORRUGATED STEEL
D.I.	DROP INLET
G.D.I.	GRATED DROP INLET
H.D.P.E.	HIGH DENSITY POLYETHYLENE
J.B.	JUNCTION BOX
M.H.	MANHOLE
N.S.	NARROW SLOT
P.V.C.	POLYVINYL CHLORIDE
R.C.	REINFORCED CONCRETE
T.B.D.I.	TRAFFIC BEARING DROP INLET
T.B.J.B.	TRAFFIC BEARING JUNCTION BOX
W.S.	WIDE SLOT

COMPUTED BY:	SRG	DATE:	02/14/2019
CHECKED BY:	JDL	DATE:	02/14/2019

D085709

PROJECT NO.	SHEET NO.
R-2530B	3D-15

NORTH CAROLINA DEPARTMENT OF TRANSPORTATION
DIVISION OF HIGHWAYS

Note: Invert Elevations indicated are for Bid Purposes only and shall not be used for project construction stakeout.
See "Standard Specifications For Roads and Structures, Section 300-5".

LIST OF PIPES, ENDWALLS, ETC. (FOR PIPES 48 INCHES & UNDER)

Line & Station (Size / Thickness or Gauge)	Offset	Structure Number From	Structure Number To	Top Elevation FT.	Invert Elevation FT.	Invert Elevation FT.	Minimum Required Slope %	Drainage Pipe (RCP, CSP, CAAP, HDPE, or PVC) 12	15	18	24	30	36	42	48	Do Not Use RCP	Do Not Use CSP	Do Not Use CAAP	Do Not Use HDPE	Do Not Use PVC	C.S. Pipe 15 (.064)	18 (.064)	24 (.064)	30 (.079)	36 (.079)	R.C. Pipe Class III 15	18	24	30	36	42	48	R.C. Pipe Class IV 15	18	24	30	36	42	48	R.C. Pipe Class V 15	18	30	48	15" Side Drain Pipe	18" Side Drain Pipe	24" Side Drain Pipe
		2207	2206		429.4	428.7																				72																				
L 276+00	72 LT	2208		407.0																																										
		2208	2202		403.5	402.7	0.8																				84																			
L 274+50	72 LT	2209		409.7																																										
		2209	2208		406.7	403.5	0.6			144																																				
L 274+50	98 LT	2210		411.9																																										
		2210	2209		408.0	406.9	1.1		24																																					
L 272+00	72 LT	2211		417.4																																										
		2211	2205		414.3	413.6	0.8																				72																			
L 272+00	98 LT	2212		420.1																																										
		2212	2211		415.7	414.6	0.4		24																																					
L 277+50	10 RT	2214		407.3																																										
		2214	2213		396.5	392.4	0.3																							120																
L 276+66	83 LT	2215	2214		401.3	396.5																								124																
Y12 12+50	52 RT	2217		405.0																																										
		2217	2216		403.5	399.5																					120																			
Y12 15+00	47 RT	2219		403.9																																										
		2219	2218		401.9	400.8																						116																		
L 269+85	100 LT	2220		433.1																																										
		2220	2221		431.0	425.3															28																									
L 269+85	72 LT	2221		428.1																																										
		2221	2211		425.3	414.6	0.5		208																																					
L 277+75	113 RT	2222		394.5																																										
		2222	2223		392.7	392.5	0.7																				52																			
L 278+50	9 RT	2224		405.5																																										
		2224	2214		402.7	401.7			100																																					
L 268+12	79 LT	2225																																										52		
L 281+27	2 LT	2302		400.5																																										
		2302	2301		395.5	391.4																				92																				
L 279+06	79 LT	2303																																											36	
L 285+40	84 LT	2305		386.2																																										
		2305	2310		383.5	382.6																				92																				
L 291+50	6 LT	2306		360.7																																										
		2306	2405		355.4	348.6	1.0					148																																		
L 290+30	0 CL	2307		366.0																																										
		2307	2306		360.8	355.4	0.8					120																																		
L 289+00	8 RT	2308		371.4																																										
		2308	2307		366.6	361.3	1.0				128																																			
L 287+00	9 RT	2309		381.6																																										
		2309	2308		376.8	366.6	1.0				200																																			
L 286+00	15 LT	2310		388.0																																										
		2310	2309		381.9	376.8	1.0																					100																		
L 285+15	9 LT	2311		391.7																																										
		2311	2310		385.3	381.9	0.9																					84																		
L 284+25	12 LT	2312		393.7																																										
		2312	2311		386.5	385.3	0.9																					88																		
L 284+00	114 LT	2313	2312		388.1	386.5	0.8																					104																		
L 291+50	72 LT	2314		361.0																																										
		2314	2306		358.0	357.0																				68																				
L 290+00	86 RT	2315	2307		362.7	361.3	0.4																												92											
							SHEET TOTALS		356	144	328	268									28					324	328	492		244					92									52	36	

Line & Station	Offset	From	To	Endwalls Std. 838.01 or Std. 838.11 (Unless Noted Otherwise) CY	Drainage Structure Masonry CY	Quantities for Drainage Structures (Note: Total Lin. Ft. for Pay Quantity shall be A + (1.3 X B)) 0' Thru 5' EACH	A: 5' Thru 10' LIN. FT.	B: 10' and Above LIN. FT.	C.B. Std. 840.01 or Std. 840.02	Frame, Grates, and Hood Std. 840.03 Grate Type E	F	G	Concrete Transitional Section: D.I. Std. 852.04 or Std. 852.06	C.B. Std. 852.05	Open Throat C.B. Std. 840.04 or Std. 840.05	D.I. Std. 840.14 or Std. 840.15	D.I. Frame and Grates Std. 840.16	G.D.I. Type "A" Std. 840.17 or Std. 840.26	G.D.I. Type "B" Std. 840.18 or Std. 840.27	G.D.I. Type "D" Std. 840.19 or Std. 840.28	G.D.I. (W.S. Flat) Frame w/ 2 Grates Std. 840.20	G.D.I. (W.S. Sag) Frame w/ 2 Grates Std. 840.22	G.D.I. (N.S. Sag) Frame w/ 2 Grates Std. 840.24	G.D.I. (N.S. Flat) Frame w/ 2 Grates Std. 840.29	J.B. Std. 840.31 or Std. 840.32	T.B.J.B. Std. 840.34	T.B.D.I. Std. 840.35	4" Drainage Pipe (Lin. Ft.)	Spring Box Std. 840.41	M.H. Frame and Cover Std. 840.54	Adjust C.B.	CB Std. 840D02 (Special Detail)	TB2GI Std. 840D35 (Special Detail)	8" HDPE (Lin. Ft.)	15" C.S. Elbow	18" C.S. Elbow	24" C.S. Elbow	30" C.S. Elbow	36" C.S. Elbow	4" Concrete Paved Ditch (SY)	Modified Conc. Flume	Flowable Fill CY	Concrete Collars Cl. "B" Std. 840.72 CY	Concrete and Brick Pipe Plug Std. 840.71 CY	Pipe Removal LIN. FT.	Remarks
		2207	2206																																											
L 276+00	72 LT	2208				1													1			1																								
		2208	2202																																											
L 274+50	72 LT	2209				1													1			1																								
		2209	2208																																											
L 274+50	98 LT	2210				1									1																															
		2210	2209																																											
L 272+00	72 LT	2211				1													1			1																								
		2211	2205																																											
L 272+00	98 LT	2212				1									1																															
		2212	2211																																											
L 277+50	10 RT	2214				1	5.0	0.8										1				1																								
		2214	2213																																											
L 276+66	83 LT	2215	2214	3.400																																										
Y12 12+50	52 RT	2217																																												
		2217	2216																																											
Y12 15+00	47 RT	2219																																												
		2219	2218																																											
L 269+85	100 LT	2220				1									1																															
		2220	2221																																2											
L 269+85	72 LT	2221				1													1			1																								
		2221	2211																																											
L 277+75	113 RT	2222		1.000																																										
		2222	2223																																											
L 278+50	9 RT	2224				1													1			1																								
		2224	2214																																											
L 268+12	79 LT	2225																																												
L 281+27	2 LT	2302				1													1			1																								
		2302	2301																																											
L 279+06	79 LT	2303																																												
L 285+40	84 LT	2305				1													1			1																								
		2305	2310																																											
L 291+50	6 LT	2306				1	0.3											1				1																								
		2306	2405																																											
L 290+30	0 CL	2307				1	0.3											1				1																								
		2307	2306																																											
L 289+00	8 RT	2308				1												1				1																								
		2308	2307																																											
L 287+00	9 RT	2309				1												1				1																								
		2309	2308																																											
L 286+00	15 LT	2310				1	1.1						1								1													1												SPECIAL DESIGN, SEE DETAIL 2C-8
		2310	2309																																											
L 285+15	9 LT	2311				1	1.4						1								1							1																		
		2311	2310																																											
L 284+25	12 LT	2312				1	2.2											1				1																								
		2312	2311																																											
L 284+00	114 LT	2313	2312																																											
L 291+50	72 LT	2314				1													1			1																								
		2314	2306																																											
L 290+00	86 RT	2315	2307																																											
SHEET TOTALS				4.400		19	10.3	0.8					2		3			6	8		2	14					1						1		2											

ABBREVIATIONS

C.A.A.	CORRUGATED ALUMINIUM ALLOY
C.B.	CATCH BASIN
C.S.	CORRUGATED STEEL
D.I.	DROP INLET
G.D.I.	GRATED DROP INLET
H.D.P.E.	HIGH DENSITY POLYETHYLENE
J.B.	JUNCTION BOX
M.H.	MANHOLE
N.S.	NARROW SLOT
P.V.C.	POLYVINYL CHLORIDE
R.C.	REINFORCED CONCRETE
T.B.D.I.	TRAFFIC BEARING DROP INLET
T.B.J.B.	TRAFFIC BEARING JUNCTION BOX
W.S.	WIDE SLOT

COMPUTED BY: SRG DATE: 02/14/2019

CHECKED BY: JDL DATE: 02/14/2019

D085709

PROJECT NO.	SHEET NO.
R-2530B	3D-16

NORTH CAROLINA DEPARTMENT OF TRANSPORTATION
DIVISION OF HIGHWAYS

Note: Invert Elevations indicated are for Bid Purposes only and shall not be used for project construction stakeout.
See "Standard Specifications For Roads and Structures, Section 300-5".

LIST OF PIPES, ENDWALLS, ETC. (FOR PIPES 48 INCHES & UNDER)

Line & Station (Size / Thickness or Gauge)	Offset		Structure Number From	Structure Number To	Top Elevation FT.	Invert Elevation FT.	Invert Elevation FT.	Minimum Required Slope %	Drainage Pipe (RCP, CSP, CAAP, HDPE, or PVC) 12	15	18	24	30	36	42	48	Do Not Use RCP	Do Not Use CSP	Do Not Use CAAP	Do Not Use HDPE	Do Not Use PVC	C.S. Pipe 15 (.064)	C.S. Pipe 18 (.064)	C.S. Pipe 24 (.064)	C.S. Pipe 30 (.079)	C.S. Pipe 36 (.079)	R.C. Pipe Class III 15	III 18	III 24	III 30	III 36	III 42	III 48	R.C. Pipe Class IV 15	IV 18	IV 24	IV 30	IV 36	IV 42	IV 48	R.C. Pipe Class V 15	V 18	V 30	V 48
L 289+46	86	RT	2316																																									
L 297+50	0	CL	2402		335.4																																							
			2402	2430		329.1	325.1	0.6																								80												
L 295+94	0	CL	2403		345.0																																							
			2403	2402		339.3	330.1	1.1					156																															
			2403	2432		339.3	338.2																				72																	
L 295+00	11	LT	2404		347.0																																							
			2404	2403		341.8	339.8	1.1																						96														
L 293+00	11	LT	2405		354.9																																							
			2405	2404		348.6	341.8	1.1					200																															
L 295+27	92	LT	2406	2407		343.0	332.9																								232													
L 297+50	79	LT	2407		338.6																																							
			2407	2402		332.9	329.6																								80													
L 297+50	115	LT	2408		347.8																																							
			2408	2407		345.5	334.6	0.5														36																						
L 297+50	81	RT	2410	2430		331.4	327.1	7.2															24																					
L 304+00	57	RT	2412		318.8																																							
			2412	2431		312.0	310.0				148																																	
L 303+50	57	RT	2413		318.6																																							
			2413	2412		314.0	313.5			48								X	X																									
L 303+25	57	RT	2414		318.6																																							
			2414	2413		314.3	314.0			24								X	X																									
L 302+00	57	RT	2415		319.7																																							
			2415	2414		315.5	314.3			120								X	X																									
L 300+50	57	RT	2416		324.2																																							
			2416	2415		320.0	315.5			144								X	X																									
L 302+00	0	CL	2417		318.8																																							
			2417	2426		316.0	313.8			216																																		
L 305+40	57	LT	2419		320.0																																							
			2419	2501		310.7	309.1	1.0			132							X	X																									
L 304+50	72	LT	2421		317.2																																							
			2421	2419		312.5	310.7	0.9			88																																	
L 304+00	72	LT	2422		317.5																																							
			2422	2421		314.8	313.8	0.3		48																																		
L 301+00	72	LT	2423		324.4																																							
			2423	2422		321.6	314.8			304																																		
L 301+00	121	LT	2424		340.7																																							
			2424	2423		338.5	321.6															48																						
L 304+50	0	CL	2425		316.6																																							
			2425	2421		313.3	312.5	0.3																				72																
L 304+18	0	CL	2426		316.6																																							
			2426	2425		313.8	313.5	0.3		28																																		
L 304+00	111	LT	2427		328.9																																							
			2427	2422		326.9	314.8															40																						
Y13 16+28	27	RT	2429																																									
L 297+75	75	RT	2430		331.0																																							
			2430	2401		320.8	320.5	0.8							24																													
L 305+50	72	RT	2431		316.0																																							
			2431	2411		310.0	300.8																32																					
L 306+75	57	LT	2501		321.6																																							
SHEET TOTALS										932	368		356		24							124	56				72	72		96	312	80												

Structure No. From	To	15" Side Drain Pipe	18" Side Drain Pipe	24" Side Drain Pipe	Endwalls Std. 838.01 or Std. 838.11 (Unless Noted Otherwise) CY	Drainage Structure Masonry CY	Quantities for Drainage Structures (Note: Total Lin. Ft. for Pay Quantity shall be A + (1.3 X B)) 0' thru 5' EACH	A 5' thru 10' LIN. FT.	B 10' and above LIN. FT.	C.B. Std. 840.01 or Std. 840.02	Frame, Grates, and Hood Std. 840.03 Grate Type E	F	G	D.I. Std. 852.04 or Std. 852.06	C.B. Std. 852.05	Open Throat C.B. Std. 840.04 or Std. 840.05	D.I. Std. 840.14 or Std. 840.15	D.I. Frame and Grates Std. 840.16	G.D.I. Type "A" Std. 840.17 or Std. 840.26	G.D.I. Type "B" Std. 840.18 or Std. 840.27	G.D.I. Type "D" Std. 840.19 or Std. 840.28	G.D.I. (W.S. Flat) Frame w/ 2 Grates Std. 840.20	G.D.I. (W.S. Sag) Frame w/ 2 Grates Std. 840.22	G.D.I. (N.S. Sag) Frame w/ 2 Grates Std. 840.24	G.D.I. (N.S. Flat) Frame w/ 2 Grates Std. 840.29	J.B. Std. 840.31 or Std. 840.32	T.B.J.B. Std. 840.34	T.B.D.I. Std. 840.35	4" Drainage Pipe (Lin. Ft.)	Spring Box Std. 840.41	M.H. Frame and Cover Std. 840.54	Adjust C.B.	CB Std. 840D02 (Special Detail)	TB2GI Std. 840D35 (Special Detail)	8" HDPE (Lin. Ft.)	15" C.S. Elbow	18" C.S. Elbow	24" C.S. Elbow	30" C.S. Elbow	36" C.S. Elbow	4" Concrete Paved Ditch (SY)	Modified Conc. Flume	Flowable Fill CY	Concrete Collars Cl. "B" Std. 840.72 CY	Concrete and Brick Pipe Plug Std. 840.71 CY	Pipe Removal LIN. FT.	Remarks
2316				28																																											
2402							1	1.3											1				1																								
2402	2430																																														
2403							1	0.7						1								1						1																			SEE DETAIL 72, SHEET 2D-5
2403	2402																																														
2403	2432																																														
2404							1	0.3											1				1																								
2404	2403																																														
2405							1	1.3											1				1																								
2405	2404																																														
2406	2407				3.400																																										
2407							1	0.8											1				1																								
2407	2402																																														
2408							1									1																															
2408	2407																																			2											
2410	2430				1.000																																2										
2412							1	1.8														1						1																			
2412	2431																																														
2413							1															1						1																			
2413	2412																																														
2414							1															1						1																			
2414	2413																																														
2415							1															1						1																			
2415	2414																																														
2416							1															1						1																			
2416	2415																																														
2417							1													1			1																								
2417	2426																																														
2419							1	4.3														1						1																			
2419	2501																																														
2421							1													1			1																								
2421	2419																																														
2422							1													1			1																								
2422	2421																																														
2423							1													1			1																								
2423	2422																																														
2424							1									1																															
2424	2423																																			2											
2425							1													1			1																								
2425	2421																																														
2426							1													1			1																								
2426	2425																																														
2427							1									1																															
2427	2422																																			2											
2429		28																																													
2430							1	5.0	0.2																	1					1																
2430	2401																																														
2431							1	1.0																		1					1																
2431	2411																																				2										
2501							1	5.0	2.5													1						1																			
SHEET TOTALS		28		28	4.400		23	21.5	2.7					1		3			4	6		8	10			2		8			2					6	4										

ABBREVIATIONS

C.A.A.	CORRUGATED ALUMINIUM ALLOY
C.B.	CATCH BASIN
C.S.	CORRUGATED STEEL
D.I.	DROP INLET
G.D.I.	GRATED DROP INLET
H.D.P.E.	HIGH DENSITY POLYETHYLENE
J.B.	JUNCTION BOX
M.H.	MANHOLE
N.S.	NARROW SLOT
P.V.C.	POLYVINYL CHLORIDE
R.C.	REINFORCED CONCRETE
T.B.D.I.	TRAFFIC BEARING DROP INLET
T.B.J.B.	TRAFFIC BEARING JUNCTION BOX
W.S.	WIDE SLOT

D085709

COMPUTED BY:	SRG	DATE:	02/14/2019
CHECKED BY:	JDL	DATE:	02/14/2019

PROJECT NO.	SHEET NO.
R-2530B	3D-17

NORTH CAROLINA DEPARTMENT OF TRANSPORTATION
DIVISION OF HIGHWAYS

Note: Invert Elevations indicated are for Bid Purposes only and shall not be used for project construction stakeout.
See "Standard Specifications For Roads and Structures, Section 300-5".

LIST OF PIPES, ENDWALLS, ETC. (FOR PIPES 48 INCHES & UNDER)

SIZE / THICKNESS OR GAUGE

Part 1: Location, structures, elevations, drainage pipe (RCP, CSP, CAAP, HDPE, or PVC)

LINE & STATION	OFFSET		STRUCTURE NUMBER FROM	TO	TOP ELEVATION FT.	INVERT ELEVATION FT.	INVERT ELEVATION FT.	MINIMUM REQUIRED SLOPE %	Drainage Pipe 12	15	18	24	30	36	42	48	DO NOT USE RCP	DO NOT USE CSP	DO NOT USE CAAP	DO NOT USE HDPE	DO NOT USE PVC
			2501	2519		309.1	296.6	1.0													
L 309+00	0	CL	2503		328.4																
			2503	2502		316.4	310.0	0.5													
L 310+50	72	RT	2504		339.8																
			2504	2505		336.8	332.8	0.4													
L 310+50	0	CL	2505		337.0																
			2505	2503		331.8	323.1	0.5					148								
L 310+50	88	RT	2506		345.7																
			2506	2504		337.0	336.8				16										
L 314+00	72	RT	2507		362.0																
			2507	2510		357.2	356.5	0.6													
L 318+00	72	RT	2508		385.3																
			2508	2507		382.3	357.7	0.4			384										
L 310+75	100	RT	2509	2506		354.7	341.8	0.9													
L 314+00	0	CL	2510		361.7																
			2510	2514		356.5	340.4	0.7				232									
L 314+00	122	RT	2511		378.6																
			2511	2507		376.5	357.7	2.2													
L 318+00	0	CL	2512		386.9																
			2512	2508		384.1	382.5														
L 318+00	129	RT	2513		405.6																
			2513	2508		403.5	382.5	0.4													
L 311+67	0	CL	2514		345.2																
			2514	2505		340.4	332.3	0.9				116									
L 311+67	66	LT	2515		345.8																
			2515	2514		341.8	341.1														
L 312+30	63	LT	2516		351.0																
			2516	2515		347.0	341.8			60								X	X		
L 306+45	102	RT	2517																		
L 306+75	121	LT	2519		301.0																
			2519	2518		291.0	290.5	0.3						28							
L 307+00	112	LT	2520	2519		301.0	296.1	1.6													
L 326+50	72	RT	2602		385.7																
			2602	2601		377.5	377.0	0.4			68										
L 326+50	5	LT	2603		383.2																
			2603	2602		378.0	377.5														
L 325+00	5	LT	2604		390.1																
			2604	2603		387.3	380.4			148											
L 331+22	15	LT	2607		350.1																
			2607	2612		344.6	339.0														
L 330+55	12	LT	2608		355.9																
			2608	2607		350.9	344.9														
L 329+78	21	RT	2609		363.4																
			2609	2608		358.4	350.9														
L 329+00	9	LT	2610		366.8																
			2610	2611		363.6	360.1														
L 329+00	75	LT	2611		363.5																
			2611	2612		351.5	339.0	0.3													
L 331+25	92	LT	2612		344.0																
			2612	2605		333.7	333.5														
								SHEET TOTALS		208	468	348	148	28							

Part 2: C.S. pipe, R.C. pipe, side drain pipe, endwalls, drainage structure

FROM	TO	C.S. PIPE 15 (.064)	18 (.064)	24 (.064)	30 (.079)	36 (.079)	R.C. PIPE CLASS III 15	18	24	30	36	42	48	R.C. PIPE CLASS IV 15	18	24	30	36	42	48	R.C. PIPE CLASS V 15	18	30	48	15" SIDE DRAIN PIPE	18" SIDE DRAIN PIPE	24" SIDE DRAIN PIPE	ENDWALLS STD. 838.01 OR STD. 838.11 (UNLESS NOTED OTHERWISE) CY	DRAINAGE STRUCTURE MASONRY CY
2501	2519			64																									
2503																													
2503	2502									112																			
2504																													
2504	2505														72														
2505																													
2505	2503																												
2506																													
2506	2504																												
2507																													
2507	2510								72																				
2508																													
2508	2507																												
2509	2506		60																										
2510																													
2510	2514																												
2511																													
2511	2507		48																										
2512																													
2512	2508						72																						
2513																													
2513	2508	56																											
2514																													
2514	2505																												
2515																													
2515	2514													64															
2516																													
2516	2515																												
2517																											40		
2519																													
2519	2518																												
2520	2519				28																							2.300	
2602																													
2602	2601																												
2603																													
2603	2602							76																					
2604																													
2604	2603																												
2607																													
2607	2612							76																					
2608																													
2608	2607						64																						
2609																													
2609	2608						80																						
2610																													
2610	2611						64																						
2611																													
2611	2612						220																						
2612																													
2612	2605							24																					
SHEET TOTALS		56	108	64	28		500	176	72	112				64	72												40	2.300	

Part 3: Quantities for drainage structures, frames, grates, inlets

QUANTITIES FOR DRAINAGE STRUCTURES — NOTE: TOTAL LIN. FT. FOR PAY QUANTITY SHALL BE A + (1.3 X B)

FROM	TO	0' THRU 5' EACH	A: 5' THRU 10' LIN. FT.	B: 10' AND ABOVE LIN. FT.	C.B. STD. 840.01 OR STD. 840.02	FRAME, GRATES, AND HOOD STD. 840.03 GRATE TYPE E	F	G	CONCRETE TRANSITIONAL SECTION D.I. STD. 852.04 OR STD. 852.06	C.B. STD. 852.05	OPEN THROAT C.B. STD. 840.04 OR STD. 840.05	D.I. STD. 840.14 OR STD. 840.15	D.I. FRAME AND GRATES STD. 840.16	G.D.I. TYPE "A" STD. 840.17 OR STD. 840.26	G.D.I. TYPE "B" STD. 840.18 OR STD. 840.27	G.D.I. TYPE "D" STD. 840.19 OR STD. 840.28	G.D.I. (W.S. FLAT) FRAME W/ 2 GRATES STD. 840.20	G.D.I. (W.S. SAG) FRAME W/ 2 GRATES STD. 840.22	G.D.I. (N.S. SAG) FRAME W/ 2 GRATES STD. 840.24	G.D.I. (N.S. FLAT) FRAME W/ 2 GRATES STD. 840.29	J.B. STD. 840.31 OR STD. 840.32	T.B.J.B. STD. 840.34	T.B.D.I. STD. 840.35
2501	2519																						
2503		1	5.0	2.0										1				1					
2503	2502																						
2504		1													1			1					
2504	2505																						
2505		1	0.3											1				1					
2505	2503																						
2506		1	3.7																		1		
2506	2504																						
2507		1												1				1					
2507	2510																						
2508		1													1			1					
2508	2507																						
2509	2506																						
2510		1	0.2											1				1					
2510	2514																						
2511		1									1												
2511	2507																						
2512		1													1			1					
2512	2508																						
2513		1									1												
2513	2508																						
2514		1												1				1					
2514	2505																						
2515		1															1						1
2515	2514																						
2516		1															1						1
2516	2515																						
2517																							
2519		1	5.0																		1		
2519	2518																						
2520	2519																						
2602		1	3.3												1			1					
2602	2601																						
2603		1	0.2												1			1					
2603	2602																						
2604		1													1			1					
2604	2603																						
2607		1	0.5						1								1						1
2607	2612																						
2608		1							1								1						1
2608	2607																						
2609		1							1								1						1
2609	2608																						
2610		1													1			1					
2610	2611																						
2611		1	5.0	2.0											1			1					
2611	2612																						
2612		1	5.0	0.3																	1		
2612	2605																						
SHEET TOTALS		23	28.2	4.3					3		2			5	8		5	13			3		5

Part 4: Miscellaneous items

FROM	TO	4" DRAINAGE PIPE (LIN. FT.)	SPRING BOX STD. 840.41	M.H. FRAME AND COVER STD. 840.54	ADJUST C.B.	CB STD. 840D02 (SPECIAL DETAIL)	TB2GI STD. 840D35 (SPECIAL DETAIL)	8" HDPE (LIN. FT.)	15" C.S. ELBOW	18" C.S. ELBOW	24" C.S. ELBOW	30" C.S. ELBOW	36" C.S. ELBOW	4" CONCRETE PAVED DITCH (SY)	MODIFIED CONC. FLUME	FLOWABLE FILL CY	CONCRETE COLLARS CL. "B" STD. 840.72 CY	CONCRETE AND BRICK PIPE PLUG STD. 840.71 CY	PIPE REMOVAL LIN. FT.	REMARKS
2501	2519										2									
2503																				
2503	2502																			
2504																				
2504	2505																			
2505																				
2505	2503																			
2506				1																
2506	2504																			
2507																				
2507	2510																			
2508																				
2508	2507																			
2509	2506									2				11						
2510																				
2510	2514																			
2511																				
2511	2507									2										
2512																				
2512	2508																			
2513																				
2513	2508								2											
2514																				
2514	2505																			
2515																				
2515	2514																			
2516																				
2516	2515																			
2517																				
2519				1																
2519	2518																			
2520	2519											2								
2602																				
2602	2601																			
2603																				
2603	2602																			
2604																				
2604	2603																			
2607																				
2607	2612																			
2608																				
2608	2607																			
2609																				
2609	2608																			
2610																				
2610	2611																			
2611																				
2611	2612																			
2612				1																
2612	2605																			
SHEET TOTALS				3					2	4	2	2		11						

ABBREVIATIONS

C.A.A.	CORRUGATED ALUMINIUM ALLOY
C.B.	CATCH BASIN
C.S.	CORRUGATED STEEL
D.I.	DROP INLET
G.D.I.	GRATED DROP INLET
H.D.P.E.	HIGH DENSITY POLYETHYLENE
J.B.	JUNCTION BOX
M.H.	MANHOLE
N.S.	NARROW SLOT
P.V.C.	POLYVINYL CHLORIDE
R.C.	REINFORCED CONCRETE
T.B.D.I.	TRAFFIC BEARING DROP INLET
T.B.J.B.	TRAFFIC BEARING JUNCTION BOX
W.S.	WIDE SLOT

D085709

COMPUTED BY:	SRG	DATE:	02/14/2019
CHECKED BY:	JDL	DATE:	02/14/2019

PROJECT NO.	SHEET NO.
R-2530B	3D-18

NORTH CAROLINA DEPARTMENT OF TRANSPORTATION
DIVISION OF HIGHWAYS

Note: Invert Elevations indicated are for Bid Purposes only and shall not be used for project construction stakeout.
See "Standard Specifications For Roads and Structures, Section 300-5".

LIST OF PIPES, ENDWALLS, ETC. (FOR PIPES 48 INCHES & UNDER)

LINE & STATION SIZE THICKNESS OR GAUGE	OFFSET	STRUCTURE NUMBER FROM	STRUCTURE NUMBER TO	TOP ELEVATION FT.	INVERT ELEVATION FT.	INVERT ELEVATION FT.	MINIMUM REQUIRED SLOPE %	Drainage Pipe (RCP, CSP, CAAP, HDPE, or PVC) 12	15	18	24	30	36	42	48	DO NOT USE RCP	DO NOT USE CSP	DO NOT USE CAAP	DO NOT USE HDPE	DO NOT USE PVC	C.S. PIPE 15 .064	18 .064	24 .064	30 .079	36 .079	R. C. PIPE CLASS III 15	18	24	30	36	42	48	R. C. PIPE CLASS IV 15	18	24	30	36	42	48	R. C. PIPE CLASS V 15	18	30	48	15" SIDE DRAIN PIPE	18" SIDE DRAIN PIPE	24" SIDE DRAIN PIPE	ENDWALLS STD. 838.01 OR STD. 838.11 (UNLESS NOTED OTHERWISE) CY
L 329+50	83 RT	2613		365.5																																											
		2613	2609		362.8	358.4																				68																					
L 323+05	79 LT	2615																																										40			
L 323+57	79 RT	2616																																										40			
Y15 15+29	31 RT	2617																																										32			
L 326+50	72 LT	2618		381.2																																											
		2618	2603		378.5	378.0																				68																					
Y15 12+17	26 RT	2620																																						36							
L 331+80	118 LT	2621	2622		332.0	331.0																					44																				1.000
L 335+00	75 RT	2704		325.7																																											
		2704	2703		322.0	320.5																				76																					
L 349+00	6 LT	2801		319.6																																											
		2801	2812		315.0	312.5			248																																						
L 349+00	66 RT	2803		321.8																																											
		2803	2801		316.2	315.0																				72																					
L 359+00	6 RT	2807		301.3																																											
		2807	2826		293.0	292.0																				76																					
L 357+00	11 RT	2808		307.7																																											
		2808	2807		304.8	296.3			200																																						
L 352+50	10 LT	2811		318.7																																											
		2811	2810		311.8	311.2																					112																				
L 351+50	9 LT	2812		319.5																																											
		2812	2811		312.5	311.8																											100														
L 348+00	1 RT	2813		320.3																																											
		2813	2801		316.0	315.0			100																																						
L 348+00	53 LT	2814		322.1																																											
		2814	2813		317.1	316.0																				56																					
L 352+30	115 RT	2815			313.0	312.0																												32													
L 349+72	79 LT	2816																																										32			
L 354+07	79 LT	2817																																											48		
L 354+50	15 LT	2818		317.0																																											
		2818	2811		312.8	311.8																											200														
L 358+78	82 LT	2820	2819		288.3	279.0																								208																	3.400
Y16 14+54	0 CL	2822	2823		298.0	294.5																													80												
L 356+75	79 LT	2824		304.0																																											
		2824	2825		300.0	291.9																													100												
Y16 11+67	78 RT	2827		312.0																																											
		2827	2828		306.4	306.0																					48																				
Y16 13+00	53 LT	2830		303.8																																											
		2830	2831		298.8	295.5																												88													
L 364+00	7 LT	2903		294.3																																											
		2903	2912		289.5	288.5				96																																					
L 363+21	6 LT	2904		293.8																																											
		2904	2903		290.6	289.8			76																																						
L 362+50	6 LT	2905		294.0																																											
		2905	2904		291.3	290.6			68																																						
L 363+21	55 LT	2906		295.3																																											
		2906	2904		291.3	290.6																											48														
L 362+90	55 LT	2907		295.3																																											
		2907	2906		291.6	291.3			28									X	X																												
SHEET TOTALS									720	96																416	204			208			348	120	180					36				144	48		4.400

LINE & STATION	FROM	TO	DRAINAGE STRUCTURE MASONRY CY	QUANTITIES FOR DRAINAGE STRUCTURES 0' THRU 5' EACH	(A) 5' THRU 10' LIN. FT.	(B) 10' AND ABOVE LIN. FT.	C.B. STD. 840.01 OR STD. 840.02	FRAME, GRATES, AND HOOD STD. 840.03 GRATE TYPE E	F	G	CONCRETE TRANSITIONAL SECTION D.I. STD. 852.04 OR STD. 852.06	C.B. STD. 852.05	OPEN THROAT C.B. STD. 840.04 OR STD. 840.05	D.I. STD. 840.14 OR STD. 840.15	D.I. FRAME AND GRATES STD. 840.16	G.D.I. TYPE "A" STD. 840.17 OR STD. 840.26	G.D.I. TYPE "B" STD. 840.18 OR STD. 840.27	G.D.I. TYPE "D" STD. 840.19 OR STD. 840.28	G.D.I. (W.S. FLAT) FRAME W/ 2 GRATES STD. 840.20	G.D.I. (W.S. SAG) FRAME W/ 2 GRATES STD. 840.22	G.D.I. (N.S. SAG) FRAME W/ 2 GRATES STD. 840.24	G.D.I. (N.S. FLAT) FRAME W/ 2 GRATES STD. 840.29	J.B. STD. 840.31 OR STD. 840.32	T.B.J.B. STD. 840.34	T.B.D.I. STD. 840.35	4" DRAINAGE PIPE (LIN. FT.)	SPRING BOX STD. 840.41	M.H. FRAME AND COVER STD. 840.54	ADJUST C.B.	CB STD. 840D02 (SPECIAL DETAIL)	TB2GI STD. 840D35 (SPECIAL DETAIL)	8" HDPE (LIN. FT.)	15" C.S. ELBOW	18" C.S. ELBOW	24" C.S. ELBOW	30" C.S. ELBOW	36" C.S. ELBOW	4" CONCRETE PAVED DITCH (SY)	MODIFIED CONC. FLUME	FLOWABLE FILL CY	CONCRETE COLLARS CL. "B" STD. 840.72 CY	CONCRETE AND BRICK PIPE PLUG STD. 840.71 CY	PIPE REMOVAL LIN. FT.	REMARKS
L 329+50	2613			1													1			1																								
	2613	2609																																										
L 323+05	2615																																											
L 323+57	2616																																											
Y15 15+29	2617																																											
L 326+50	2618			1													1			1																								
	2618	2603																																										
Y15 12+17	2620																																											
L 331+80	2621	2622																																										
L 335+00	2704			1													1			1																								
	2704	2703																																										
L 349+00	2801			1													1			1																								
	2801	2812																																										
L 349+00	2803			1	0.6														1						1																			
	2803	2801																																										
L 359+00	2807			1	3.3												1			1																								
	2807	2826																																										
L 357+00	2808			1													1			1																								
	2808	2807																																										
L 352+50	2811			1	1.9															1					1																			
	2811	2810																																										
L 351+50	2812			1	2.0															1					1																			
	2812	2811																																										
L 348+00	2813			1													1			1																								
	2813	2801																																										
L 348+00	2814			1															1						1																			
	2814	2813																																										
L 352+30	2815																																											
L 349+72	2816																																											
L 354+07	2817																																											
L 354+50	2818			1							1								1						1																			
	2818	2811																																										
L 358+78	2820	2819																																										
Y16 14+54	2822	2823																																										
L 356+75	2824			1									1																															
	2824	2825																																										
Y16 11+67	2827			1	0.6									1																														SEE DETAILS 2D-6 AND 2D-7
	2827	2828																																										
Y16 13+00	2830			1															1						1																			
	2830	2831																																										
L 364+00	2903			1													1			1																								
	2903	2912																																										
L 363+21	2904			1													1			1																								
	2904	2903																																										
L 362+50	2905			1													1			1																								
	2905	2904																																										
L 363+21	2906			1															1						1																			
	2906	2904																																										
L 362+90	2907			1															1						1																			
	2907	2906																																										
SHEET TOTALS				20	8.4						1		1	1			10		6	12					8																			

ABBREVIATIONS

C.A.A.	CORRUGATED ALUMINIUM ALLOY
C.B.	CATCH BASIN
C.S.	CORRUGATED STEEL
D.I.	DROP INLET
G.D.I.	GRATED DROP INLET
H.D.P.E.	HIGH DENSITY POLYETHYLENE
J.B.	JUNCTION BOX
M.H.	MANHOLE
N.S.	NARROW SLOT
P.V.C.	POLYVINYL CHLORIDE
R.C.	REINFORCED CONCRETE
T.B.D.I.	TRAFFIC BEARING DROP INLET
T.B.J.B.	TRAFFIC BEARING JUNCTION BOX
W.S.	WIDE SLOT

D085709

COMPUTED BY:	SRG	DATE:	02/14/2019
CHECKED BY:	JDL	DATE:	02/14/2019

PROJECT NO.	SHEET NO.
R-2530B	3D-19

NORTH CAROLINA DEPARTMENT OF TRANSPORTATION
DIVISION OF HIGHWAYS

**Note: Invert Elevations indicated are for Bid Purposes only and shall not be used for project construction stakeout.
See "Standard Specifications For Roads and Structures, Section 300-5".**

LIST OF PIPES, ENDWALLS, ETC. (FOR PIPES 48 INCHES & UNDER)

LINE & STATION	OFFSET		STRUCTURE NUMBER FROM	TO	TOP ELEVATION FT.	INVERT ELEVATION FT.	INVERT ELEVATION FT.	MINIMUM REQUIRED SLOPE %
L 365+00	90	LT	2909		292.7			
			2909	2908		287.7	281.5	6.0
L 367+05	72	LT	2910		297.6			
			2910	2909		294.6	289.7	0.3
L 367+65	72	LT	2911		299.1			
			2911	2910		296.3	294.9	
L 365+00	7	LT	2912		295.4			
			2912	2909		288.5	287.7	
L 365+58	21	RT	2913		298.6			
			2913	2912		294.5	292.6	
L 367+05	0	CL	2914		298.3			
			2914	2910		295.5	294.9	
L 371+65	0	CL	2919		309.8			
			2919	2918		301.8	298.0	
L 371+75	84	LT	2920	2919		305.0	301.8	
L 365+53	79	RT	2930					
L 366+95	79	RT	2931					
L 368+70	79	RT	2932					
L 375+05	55	LT	3002		318.6			
			3002	3001		313.4	296.9	0.3
L 375+05	0	CL	3003		316.8			
			3003	3002		314.0	313.4	
L 376+00	55	LT	3004		320.8			
			3004	3002		317.1	314.8	
L 378+22	72	LT	3007		323.7			
			3007	3005		321.0	319.3	
L 381+00	55	RT	3010		332.9			
			3010	3016		327.0	325.3	0.3
L 381+00	0	CL	3011		330.6			
			3011	3010		327.6	327.0	
L 383+00	0	CL	3012		335.1			
			3012	3011		332.1	327.6	
L 386+00	12	RT	3013		343.5			
			3013	3012		339.5	332.1	
L 387+00	27	LT	3014		344.7			
			3014	3013		340.7	339.5	
L 388+00	18	LT	3015		346.8			
			3015	3014		344.0	341.9	
L 379+65	55	RT	3016		329.8			
			3016	3008		325.3	313.0	1.6
L 382+00	55	RT	3017		335.1			
			3017	3010		331.0	328.7	
L 381+00	55	LT	3018		332.9			
			3018	3011		328.4	327.6	
L 381+30	55	LT	3019		333.5			
			3019	3018		329.4	328.7	
L 383+00	55	LT	3020		337.4			
			3020	3012		333.3	332.1	
L 384+84	79	RT	3021					
L 388+38	79	RT	3022					
SHEET TOTALS								

FROM	TO	Drainage Pipe (RCP, CSP, CAAP, HDPE, or PVC) 12	15	18	24	30	36	42	48	DO NOT USE RCP	DO NOT USE CSP	DO NOT USE CAAP	DO NOT USE HDPE	DO NOT USE PVC	C.S. PIPE 15 (.064)	18 (.064)	24 (.064)	30 (.079)	36 (.079)	R. C. PIPE CLASS III 15	18	24	30	36	42	48	R. C. PIPE CLASS IV 15	18	24	30	36	42	48	R. C. PIPE CLASS V 15	18	30	48	15" SIDE DRAIN PIPE	18" SIDE DRAIN PIPE	24" SIDE DRAIN PIPE	ENDWALLS STD. 838.01 OR STD. 838.11 (UNLESS NOTED OTHERWISE) CY	DRAINAGE STRUCTURE MASONRY CY
2909																																										
2909	2908															56																										
2910																																										
2910	2909																				200																					
2911																																										
2911	2910		56																																							
2912																																										
2912	2909																				84																					
2913																																										
2913	2912																										64															
2914																																										
2914	2910																			72																						
2919																																										
2919	2918																					100																				
2920	2919																					84																				
2930																																					40					
2931																																					32					
2932																																					36					
3002																																										
3002	3001															56																										
3003																																										
3003	3002																			56																						
3004																																										
3004	3002		92								X	X																														
3007																																										
3007	3005		76																																							
3010																																										
3010	3016			132							X	X																														
3011																																										
3011	3010																				56																					
3012																																										
3012	3011			200																																						
3013																																										
3013	3012			300																																						
3014																																										
3014	3013																											104														
3015																																										
3015	3014		100																																							
3016																																										
3016	3008															52																										
3017																																										
3017	3010		100								X	X																														
3018																																										
3018	3011																											56														
3019																																										
3019	3018		28								X	X																														
3020																																										
3020	3012																										56															
3021																																							32		
3022																																						48			
SHEET TOTALS			452	632												164				128	340	184					120	160									108	48	32		

FROM	TO	QUANTITIES FOR DRAINAGE STRUCTURES (NOTE: TOTAL LIN. FT. FOR PAY QUANTITY SHALL BE A + (1.3 X B)) 0' THRU 5' EACH	A 5' THRU 10' LIN. FT.	B 10' AND ABOVE LIN. FT.	C.B. STD. 840.01 OR STD. 840.02	FRAME, GRATES, AND HOOD STD. 840.03 GRATE TYPE E	F	G	CONCRETE TRANSITIONAL SECTION D.I. STD. 852.04 OR STD. 852.06	C.B. STD. 852.05	OPEN THROAT C.B. STD. 840.04 OR STD. 840.05	D.I. STD. 840.14 OR STD. 840.15	D.I. FRAME AND GRATES STD. 840.16	G.D.I. TYPE "A" STD. 840.17 OR STD. 840.26	G.D.I. TYPE "B" STD. 840.18 OR STD. 840.27	G.D.I. TYPE "D" STD. 840.19 OR STD. 840.28	G.D.I. (W.S. FLAT) FRAME W/ 2 GRATES STD. 840.20	G.D.I. (W.S. SAG) FRAME W/ 2 GRATES STD. 840.22	G.D.I. (N.S. SAG) FRAME W/ 2 GRATES STD. 840.24	G.D.I. (N.S. FLAT) FRAME W/ 2 GRATES STD. 840.29	J.B. STD. 840.31 OR STD. 840.32	T.B.J.B. STD. 840.34	T.B.D.I. STD. 840.35	4" DRAINAGE PIPE (LIN. FT.)	SPRING BOX STD. 840.41	M.H. FRAME AND COVER STD. 840.54	ADJUST C.B.	CB STD. 840D02 (SPECIAL DETAIL)	TB2GI STD. 840D35 (SPECIAL DETAIL)	8" HDPE (LIN. FT.)	15" C.S. ELBOW	18" C.S. ELBOW	24" C.S. ELBOW	30" C.S. ELBOW	36" C.S. ELBOW	4" CONCRETE PAVED DITCH (SY)	MODIFIED CONC. FLUME	FLOWABLE FILL CY	CONCRETE COLLARS CL. "B" STD. 840.72 CY	CONCRETE AND BRICK PIPE PLUG STD. 840.71 CY	PIPE REMOVAL LIN. FT.	REMARKS
2909		1													1			1																								
2909	2908																																2									
2910		1													1			1																								
2910	2909																																									
2911		1													1			1																								
2911	2910																																									
2912		1	1.9												1			1																								
2912	2909																																									
2913		1							1								1						1																			
2913	2912																																									
2914		1													1			1																								
2914	2910																																									
2919		1	3.0												1			1																								
2919	2918																																									
2920	2919																																									
2930																																										
2931																																										
2932																																										
3002		1	0.3														1						1																			
3002	3001																																2									
3003		1													1			1																								
3003	3002																																									
3004		1															1						1																			
3004	3002																																									
3007		1													1			1																								
3007	3005																																									
3010		1	0.9														1						1																			
3010	3016																																									
3011		1													1			1																								
3011	3010																																									
3012		1													1			1																								
3012	3011																																									
3013		1													1			1																								
3013	3012																																									
3014		1													1			1																								
3014	3013																																									
3015		1													1			1																								
3015	3014																																									
3016		1															1						1																			
3016	3008																																2									
3017		1															1						1																			
3017	3010																																									
3018		1															1						1																			
3018	3011																																									
3019		1															1						1																			
3019	3018																																									
3020		1															1						1																			
3020	3012																																									
3021																																										
3022																																										
SHEET TOTALS		22	6.1						1						13		9	13					9										6									

ABBREVIATIONS

- C.A.A. CORRUGATED ALUMINIUM ALLOY
- C.B. CATCH BASIN
- C.S. CORRUGATED STEEL
- D.I. DROP INLET
- G.D.I. GRATED DROP INLET
- H.D.P.E. HIGH DENSITY POLYETHYLENE
- J.B. JUNCTION BOX
- M.H. MANHOLE
- N.S. NARROW SLOT
- P.V.C. POLYVINYL CHLORIDE
- R.C. REINFORCED CONCRETE
- T.B.D.I. TRAFFIC BEARING DROP INLET
- T.B.J.B. TRAFFIC BEARING JUNCTION BOX
- W.S. WIDE SLOT

D085709

COMPUTED BY: SRG DATE: 02/14/2019

CHECKED BY: JDL DATE: 02/14/2019

PROJECT NO.	SHEET NO.
R-2530B	3D-20

NORTH CAROLINA DEPARTMENT OF TRANSPORTATION
DIVISION OF HIGHWAYS

Note: Invert Elevations indicated are for Bid Purposes only and shall not be used for project construction stakeout.
See "Standard Specifications For Roads and Structures, Section 300-5".

LIST OF PIPES, ENDWALLS, ETC. (FOR PIPES 48 INCHES & UNDER)

LINE & STATION (SIZE / THICKNESS OR GAUGE)	OFFSET	STRUCTURE NUMBER FROM	STRUCTURE NUMBER TO	TOP ELEVATION FT.	INVERT ELEVATION FT.	INVERT ELEVATION FT.	MINIMUM REQUIRED SLOPE %	Drainage Pipe (RCP, CSP, CAAP, HDPE, or PVC) 12	15	18	24	30	36	42	48	DO NOT USE RCP	DO NOT USE CSP	DO NOT USE CAAP	DO NOT USE HDPE	DO NOT USE PVC	C.S. PIPE 15 (.064)	18 (.064)	24 (.064)	30 (.079)	36 (.079)	R. C. PIPE CLASS III 15	18	24	30	36	42	48	R. C. PIPE CLASS IV 15	18	24	30	36	42	48	R. C. PIPE CLASS V 15	18	30	48
L 380+07	147 RT	3023		315.0																																							
		3023	3024		309.5	309.0																					56																
L 393+84	4 LT	3102		349.1																																							
L 393+82	6 RT	3103																																									
		3103	3102		345.9	345.8	0.5																				12																
L 393+66	66 RT	3104																																									
L 393+64	72 RT	3105		350.4																																							
		3105	3104		347.0	346.9	0.5																				8																
L 393+53	108 RT	3106	3105		359.2	347.7	4.6														36																						
L 394+15	9 LT	3107																																									
Y1 12+41	47 RT	3201	3211		564.5	564.4	1.3					24																															
Y1 13+95	9 LT	3204		574.4																																							
		3204	3208		568.3	567.8																					48																
Y1 14+50	9 LT	3205		574.5																																							
		3205	3204		569.8	569.4																											52										
Y1 13+55	9 LT	3206		574.2																																							
		3206	3204		569.8	569.4																											40										
Y1 13+80	36 RT	3208		572.8																																							
		3208	3211		567.8	565.4	0.3																											136									
Y1 15+50	9 LT	3209		574.9																																							
		3209	3205		570.6	569.8																											100										
Y1 15+00	37 RT	3210		573.3																																							
		3210	3208		569.0	568.0																											116										
Y1 12+41	36 RT	3211		572.1																																							
		3211	3212		564.4	563.1	0.6																						164														
		3212	3214		563.1	559.3	1.0																						168														
Y1 24+35	53 LT	3220		595.9																																							
		3220	0423		592.0	582.4																											292										
Y1 24+79	41 RT	3221		597.0																																							
		3221	0431		593.4	589.0																											180										
Y1 24+91	60 RT	3222		595.9																																							
		3222	3221		593.6	593.4			24																																		
Y2 25+57	58 LT	3301								52																																	
Y2A 14+03	0 CL	3401	3402		557.0	556.7																																			72		
Y2A 14+79	27 RT	3403																																									
Y8 23+80	31 RT	3405	3406		560.4	559.3																					24																
Y8 23+81	19 RT	3406																																									
L 21+17	35 RT																																										
L 22+15	42 RT																																										
L 22+76	40 LT																																										
L 23+03	66 RT																																										
L 23+26	58 RT																																										
L 24+07	71 RT																																										
L 26+23	36 LT																																										
L 26+80	40 RT																																										
L 27+44	33 LT																																										
L 27+62	36 RT																																										
L 28+93	26 RT																																										
L 29+17	50 RT																																										
L 29+32	49 RT																																										
SHEET TOTALS									24	52		24									36						148		332				780	136							72		

LINE & STATION	FROM	TO	15" SIDE DRAIN PIPE	18" SIDE DRAIN PIPE	24" SIDE DRAIN PIPE	ENDWALLS STD. 838.01 OR STD. 838.11 (UNLESS NOTED OTHERWISE) CY	DRAINAGE STRUCTURE MASONRY CY	QUANTITIES FOR DRAINAGE STRUCTURES 0' THRU 5' EACH	5' THRU 10' (A) LIN. FT.	10' AND ABOVE (B) LIN. FT.	C.B. STD. 840.01 OR STD. 840.02	FRAME, GRATES, AND HOOD STD. 840.03 GRATE TYPE E	F	G	CONCRETE TRANSITIONAL SECTION D.I. STD. 852.04 OR STD. 852.06	C.B. STD. 852.05	OPEN THROAT C.B. STD. 840.04 OR STD. 840.05	D.I. STD. 840.14 OR STD. 840.15	D.I. FRAME AND GRATES STD. 840.16	G.D.I. TYPE "A" STD. 840.17 OR STD. 840.26	G.D.I. TYPE "B" STD. 840.18 OR STD. 840.27	G.D.I. TYPE "D" STD. 840.19 OR STD. 840.28	G.D.I. (W.S. FLAT) FRAME W/ 2 GRATES STD. 840.20	G.D.I. (W.S. SAG) FRAME W/ 2 GRATES STD. 840.22	G.D.I. (N.S. SAG) FRAME W/ 2 GRATES STD. 840.24	G.D.I. (N.S. FLAT) FRAME W/ 2 GRATES STD. 840.29	J.B. STD. 840.31 OR STD. 840.32	T.B.J.B. STD. 840.34	T.B.D.I. STD. 840.35
L 380+07	3023							1	0.5									1											
	3023	3024																											
L 393+84	3102							1													1			1					
L 393+82	3103																												
	3103	3102																											
L 393+66	3104																												
L 393+64	3105							1													1			1					
	3105	3104																											
L 393+53	3106	3105																											
L 394+15	3107		40																										
Y1 12+41	3201	3211																											
Y1 13+95	3204							1	1.1						1											1			1
	3204	3208																											
Y1 14+50	3205							1							1											1			1
	3205	3204																											
Y1 13+55	3206							1							1											1			1
	3206	3204																											
Y1 13+80	3208							1			1			1															
	3208	3211																											
Y1 15+50	3209							1							1											1			1
	3209	3205																											
Y1 15+00	3210							1			1			1															
	3210	3208																											
Y1 12+41	3211							1	2.8		1			1															
	3211	3212																											
	3212	3214																											
Y1 24+35	3220							1			1		1																
	3220	0423																											
Y1 24+79	3221							1			1			1															
	3221	0431																											
Y1 24+91	3222							1										1	1										
	3222	3221																											
Y2 25+57	3301																												
Y2A 14+03	3401	3402																											
Y2A 14+79	3403		40																										
Y8 23+80	3405	3406																											
Y8 23+81	3406																												
L 21+17																													
L 22+15																													
L 22+76																													
L 23+03																													
L 23+26																													
L 24+07																													
L 26+23																													
L 26+80																													
L 27+44																													
L 27+62																													
L 28+93																													
L 29+17																													
L 29+32																													
SHEET TOTALS			80					13	4.4		5		1	4	4			2	1		2			2		4			4

LINE & STATION	FROM	TO	4" DRAINAGE PIPE (LIN. FT.)	SPRING BOX STD. 840.41	M.H. FRAME AND COVER STD. 840.54	ADJUST C.B.	CB STD. 840D02 (SPECIAL DETAIL)	TB2GI STD. 840D35 (SPECIAL DETAIL)	8" HDPE (LIN. FT.)	15" C.S. ELBOW	18" C.S. ELBOW	24" C.S. ELBOW	30" C.S. ELBOW	36" C.S. ELBOW	4" CONCRETE PAVED DITCH (SY)	MODIFIED CONC. FLUME	FLOWABLE FILL CY	CONCRETE COLLARS CL. "B" STD. 840.72 CY	CONCRETE AND BRICK PIPE PLUG STD. 840.71 CY	PIPE REMOVAL LIN. FT.	REMARKS
L 380+07	3023																				SEE DETAILS 2D-8 & 2D-9
	3023	3024																			
L 393+84	3102																				TIE TO EX 18"
L 393+82	3103																	0.4465			
	3103	3102																			
L 393+66	3104																	0.4465			
L 393+64	3105																				
	3105	3104																			
L 393+53	3106	3105								2											RETAIN OTCB
L 394+15	3107																				
Y1 12+41	3201	3211																			TIE TO EX DI
Y1 13+95	3204																				TIE TO EX 15" RCP
	3204	3208																			
Y1 14+50	3205																				
	3205	3204																			
Y1 13+55	3206																				
	3206	3204																			
Y1 13+80	3208																				
	3208	3211																			
Y1 15+50	3209																				
	3209	3205																			
Y1 15+00	3210																				
	3210	3208																			
Y1 12+41	3211																				
	3211	3212																			RETAIN EX CB
	3212	3214																			TIE TO EX CB
Y1 24+35	3220																				REMOVE EX CB
	3220	0423																			
Y1 24+79	3221																				
	3221	0431																			
Y1 24+91	3222																				
	3222	3221																			
Y2 25+57	3301																				
Y2A 14+03	3401	3402																			
Y2A 14+79	3403																				
Y8 23+80	3405	3406																			EXTEND EXISTING 18" RCP
Y8 23+81	3406																	0.4465			COLLAR EXISTING 18" RCP
L 21+17																				75	REMOVE EX DI AND EX 15" RCP
L 22+15																				117	REMOVE EX DI AND EX 18" RCP
L 22+76																			0.065	24	REMOVE EX 18" RCP AND PLUG AT EX DI
L 23+03																				4	REMOVE EX 15" RCP
L 23+26																				41	REMOVE EX DI AND EX 15" RCP
L 24+07																				127	REMOVE EX JB AND EX 18" RCP
L 26+23																				55	REMOVE EX 15" RCP
L 26+80																				8	REMOVE EX DI AND EX 18" RCP
L 27+44																				9	REMOVE EX 10" HDPE
L 27+62																				152	REMOVE EX DI AND EX 18" RCP
L 28+93																				104	REMOVE EX 18" CMP
L 29+17																				33	REMOVE EX DI AND 33' OF EX 24" RCP
L 29+32																				33	REMOVE 33' OF EX 24" RCP
SHEET TOTALS										2								1.3395	0.065	782	

ABBREVIATIONS

C.A.A.	CORRUGATED ALUMINIUM ALLOY
C.B.	CATCH BASIN
C.S.	CORRUGATED STEEL
D.I.	DROP INLET
G.D.I.	GRATED DROP INLET
H.D.P.E.	HIGH DENSITY POLYETHYLENE
J.B.	JUNCTION BOX
M.H.	MANHOLE
N.S.	NARROW SLOT
P.V.C.	POLYVINYL CHLORIDE
R.C.	REINFORCED CONCRETE
T.B.D.I.	TRAFFIC BEARING DROP INLET
T.B.J.B.	TRAFFIC BEARING JUNCTION BOX
W.S.	WIDE SLOT

NOTE: TOTAL LIN. FT. FOR PAY QUANTITY SHALL BE A + (1.3 X B)

D085709

COMPUTED BY:	SRG	DATE:	02/14/2019
CHECKED BY:	JDL	DATE:	02/14/2019

PROJECT NO.	SHEET NO.
R-2530B	3D-21

NORTH CAROLINA DEPARTMENT OF TRANSPORTATION
DIVISION OF HIGHWAYS

**Note: Invert Elevations indicated are for Bid Purposes only and shall not be used for project construction stakeout.
See "Standard Specifications For Roads and Structures, Section 300-5".**

LIST OF PIPES, ENDWALLS, ETC. (FOR PIPES 48 INCHES & UNDER)

LINE & STATION	OFFSET		PIPE REMOVAL (LIN. FT.)	REMARKS
L 29+41	29	RT	29	REMOVE EX 36" RCP
L 29+49	20	RT	12	REMOVE EX CB AND EX 18" RCP
L 29+83	24	RT	41	REMOVE EX CB AND EX 36" RCP
L 31+22	13	RT	231	REMOVE EX CB AND EX 36" RCP
L 32+58	44	RT	73	REMOVE EX CB AND EX 18" RCP
L 32+59	1	RT	39	REMOVE EX CB AND EX 36" RCP
L 32+84	2	RT	9	REMOVE EX 36" RCP
L 34+36	10	LT	8	REMOVE EX CB AND EX 36" CMP
L 34+36	33	LT	19	REMOVE EX 36" CMP
L 34+57	0	CL	12	REMOVE EX CB AND EX 36" RCP
L 34+79	0	CL	28	REMOVE EX CB AND EX 36" RCP
L 34+98	0	CL	7	REMOVE EX DI AND EX 36" RCP
L 35+09	22	RT	40	REMOVE EX CB AND EX 15" RCP
L 35+81	1	RT	148	REMOVE EX CB AND EX 36" RCP
L 36+42	22	RT	47	REMOVE EX DI AND EX 15" RCP
L 36+76	2	RT	40	REMOVE EX CB AND EX 36" RCP
L 37+49	3	RT	102	REMOVE EX 36" RCP
L 37+97	61	LT	37	REMOVE EX DI AND EX 15" RCP
L 38+17	55	LT	12	REMOVE EX CB AND EX 18" RCP
L 38+25	7	LT	11	REMOVE EX CB AND EX 18" RCP
L 38+34	63	LT	31	REMOVE EX 15" RCP
L 38+51	29	RT	28	REMOVE EX CB AND EX 15" RCP
L 39+62	60	LT	56	REMOVE EX 18" RCP
L 40+36	8	LT	8	REMOVE EX CB AND EX 15" RCP
L 41+18	59	LT	72	REMOVE EX 18" RCP
L 41+58	53	LT	8	REMOVE EX CB AND EX 15" RCP
L 43+37	55	LT	80	REMOVE EX DI AND EX 15" RCP
L 43+79	51	LT	3	REMOVE EX CB AND EX 15" RCP
L 50+48	54	LT	12	REMOVE EX 15" RCP
L 53+75	47	LT	8	REMOVE EX CB AND EX 24" RCP
L 54+35	3	LT	4	REMOVE EX CB AND EX 18" RCP
L 60+04	19	LT	49	REMOVE EX CB AND EX 18" RCP
L 60+17	45	LT	8	REMOVE EX 18" RCP
L 61+02	46	LT	23	REMOVE EX 18" RCP
L 61+37	45	LT	40	REMOVE EX UG JB AND EX 15" RCP
L 62+00	46	LT	85	REMOVE EX DI AND EX 12" RCP
L 62+42	48	LT	5	REMOVE EX UG JB AND EX 12" RCP
L 67+38	56	RT	146	REMOVE EX DI AND EX 24" RCP
L 67+87	23	LT	52	REMOVE EX DI AND EX 24" RCP
L 69+59	22	LT	60	REMOVE EX 18" RCP
L 70+53	1	LT	38	REMOVE EX 12" RCP
L 71+36	46	LT	40	REMOVE EX 12" RCP
L 71+88	46	LT	60	REMOVE EX DI AND EX 12" RCP
L 73+45	46	LT	40	REMOVE EX 12" RCP
L 74+36	54	LT	17	REMOVE EX 12" RCP
L 74+55	19	LT	57	REMOVE EX 18" RCP
L 80+42	47	LT	28	REMOVE EX DI AND EX 12" RCP
L 80+57	2	LT	22	REMOVE EX 12" RCP
L 81+41	46	LT	26	REMOVE EX 12" RCP
L 82+90	47	LT	24	REMOVE EX 15" RCP
SHEET TOTALS			2075	

ABBREVIATIONS

- **C.A.A.** CORRUGATED ALUMINIUM ALLOY
- **C.B.** CATCH BASIN
- **C.S.** CORRUGATED STEEL
- **D.I.** DROP INLET
- **G.D.I.** GRATED DROP INLET
- **H.D.P.E.** HIGH DENSITY POLYETHYLENE
- **J.B.** JUNCTION BOX
- **M.H.** MANHOLE
- **N.S.** NARROW SLOT
- **P.V.C.** POLYVINYL CHLORIDE
- **R.C.** REINFORCED CONCRETE
- **T.B.D.I.** TRAFFIC BEARING DROP INLET
- **T.B.J.B.** TRAFFIC BEARING JUNCTION BOX
- **W.S.** WIDE SLOT

D085709

COMPUTED BY:	SRG	DATE:	02/14/2019
CHECKED BY:	JDL	DATE:	02/14/2019

PROJECT NO.	SHEET NO.
R-2530B	3D-22

NORTH CAROLINA DEPARTMENT OF TRANSPORTATION
DIVISION OF HIGHWAYS

**Note: Invert Elevations indicated are for Bid Purposes only and shall not be used for project construction stakeout.
See "Standard Specifications For Roads and Structures, Section 300-5".**

LIST OF PIPES, ENDWALLS, ETC. (FOR PIPES 48 INCHES & UNDER)

Column headings (all columns other than those in the data table below are empty on this sheet):

LINE & STATION / SIZE / THICKNESS OR GAUGE	OFFSET	STRUCTURE NUMBER FROM	STRUCTURE NUMBER TO	TOP ELEVATION FT.	INVERT ELEVATION FT.	INVERT ELEVATION FT.	MINIMUM REQUIRED SLOPE %	Drainage Pipe (RCP, CSP, CAAP, HDPE, or PVC) 12	15	18	24	30	36	42	48	DO NOT USE RCP	DO NOT USE CSP	DO NOT USE CAAP	DO NOT USE HDPE	DO NOT USE PVC	C.S. PIPE 15 .064	18 .064	24 .064	30 .079	36 .079	R. C. PIPE CLASS III 15	18	24	30	36	42	48	R. C. PIPE CLASS IV 15	18	24	30	36	42	48	R. C. PIPE CLASS V 15	18	30	48	15" SIDE DRAIN PIPE	18" SIDE DRAIN PIPE	24" SIDE DRAIN PIPE	ENDWALLS STD. 838.01 OR STD. 838.11 (UNLESS NOTED OTHERWISE) CY	DRAINAGE STRUCTURE MASONRY CY	QUANTITIES FOR DRAINAGE STRUCTURES (NOTE: TOTAL LIN. FT. FOR PAY QUANTITY SHALL BE A + (1.3 X B)) 0' THRU 5' EACH	A 5' THRU 10' LIN. FT.	B 10' AND ABOVE LIN. FT.	C.B. STD. 840.01 OR STD. 840.02	FRAME, GRATES, AND HOOD STD. 840.03 GRATE TYPE E	F	G	CONCRETE TRANSITIONAL SECTION D.I. STD. 852.04 OR STD. 852.06	C.B. STD. 852.05	OPEN THROAT C.B. STD. 840.04 OR STD. 840.05	D.I. STD. 840.14 OR STD. 840.15	D.I. FRAME AND GRATES STD. 840.16	G.D.I. TYPE "A" STD. 840.17 OR STD. 840.26	G.D.I. TYPE "B" STD. 840.18 OR STD. 840.27	G.D.I. TYPE "D" STD. 840.19 OR STD. 840.28	G.D.I. (W.S. FLAT) FRAME W/ 2 GRATES STD. 840.20	G.D.I. (W.S. SAG) FRAME W/ 2 GRATES STD. 840.22	G.D.I. (N.S. SAG) FRAME W/ 2 GRATES STD. 840.24	G.D.I. (N.S. FLAT) FRAME W/ 2 GRATES STD. 840.29	J.B. STD. 840.31 OR STD. 840.32	T.B.J.B. STD. 840.34	T.B.D.I. STD. 840.35	4" DRAINAGE PIPE (LIN. FT.)	SPRING BOX STD. 840.41	M.H. FRAME AND COVER STD. 840.54	ADJUST C.B.	CB STD. 840D02 (SPECIAL DETAIL)	TB2GI STD. 840D35 (SPECIAL DETAIL)	8" HDPE (LIN. FT.)	15" C.S. ELBOW	18" C.S. ELBOW	24" C.S. ELBOW	30" C.S. ELBOW	36" C.S. ELBOW	4" CONCRETE PAVED DITCH (SY)	MODIFIED CONC. FLUME	FLOWABLE FILL CY	CONCRETE COLLARS CL. "B" STD. 840.72 CY	CONCRETE AND BRICK PIPE PLUG STD. 840.71 CY	PIPE REMOVAL LIN. FT.	REMARKS

LINE & STATION	OFFSET		PIPE REMOVAL (LIN. FT.)	REMARKS
L 83+89	47	LT	24	REMOVE EX 15" RCP
L 85+13	24	LT	61	REMOVE EX DI AND EX 18" RCP
L 85+13	6	RT	33	REMOVE EX 18" RCP
L 85+49	3	RT	37	REMOVE EX 18" RCP
L 85+93	1	LT	24	REMOVE EX 18" RCP
L 87+05	47	LT	60	REMOVE EX 12" RCP
L 87+64	2	LT	24	REMOVE EX 18" RCP
L 88+72	47	LT	19	REMOVE EX 12" RCP
L 89+87	23	LT	57	REMOVE EX 18" RCP
L 95+70	1	LT	40	REMOVE EX 15" RCP
L 97+84	38	RT	56	REMOVE EX 12" RCP
L 102+09	3	LT	81	REMOVE EX 24" RCP
L 104+04	8	LT	39	REMOVE EX 12" RCP
L 108+67	35	LT	92	REMOVE EX 18" RCP
L 108+87	33	RT	49	REMOVE EX DI AND EX 18" RCP
L 110+49	54	RT	9	REMOVE EX JB AND EX 15" RCP
L 110+75	101	RT	25	REMOVE EX 15" RCP
L 111+67	11	LT	24	REMOVE EX 12" RCP
L 113+06	58	RT	489	REMOVE EX 15" RCP
L 115+28	79	RT	42	REMOVE EX 12" HDPE
L 115+70	60	RT	41	REMOVE EX 18" CMP
L 118+68	68	RT	21	REMOVE EX 30" RCP
L 118+90	40	RT	61	REMOVE EX 15" RCP
L 140+48	4	RT	40	REMOVE EX 2 @ 24" RCP
L 142+17	3	LT	55	REMOVE EX 24" RCP
L 142+17	1	LT	55	REMOVE EX 24" RCP
L 143+38	33	RT	57	REMOVE EX 24" RCP
L 143+67	56	RT	28	REMOVE EX 12" RCP
L 145+47	8	LT	42	REMOVE EX 18" RCP
L 145+64	38	RT	47	REMOVE EX 18" RCP
L 148+10	146	LT	33	REMOVE EX 12" RCP
L 149+54	34	RT	57	REMOVE EX 18" RCP
L 152+56	33	RT	57	REMOVE EX 18" RCP
L 155+81	61	RT	49	REMOVE EX 15" RCP
L 157+11	39	RT	61	REMOVE EX 24" RCP
L 163+58	5	LT	25	REMOVE EX 12" RCP
L 171+23	36	LT	57	REMOVE EX 18" RCP
L 171+80	13	RT	28	REMOVE EX 12" RCP
L 176+95	58	LT	24	REMOVE EX 12" RCP
L 177+43	14	LT	25	REMOVE EX 15" RCP
L 178+94	13	LT	20	REMOVE EX 12" RCP
L 180+32	34	LT	53	REMOVE EX 18" RCP
L 183+10	57	LT	20	REMOVE EX 15" CMP
L 186+47	35	LT	51	REMOVE EX 18" RCP
L 188+66	14	LT	21	REMOVE EX 15" RCP
L 190+57	12	LT	27	REMOVE EX 18" RCP
L 191+57	41	LT	54	REMOVE EX 18" RCP
L 197+67	3	LT	49	REMOVE EX 18" RCP
L 204+33	74	LT	125	REMOVE EX 18" RCP
L 204+96	106	LT	22	REMOVE EX 12" RCP
SHEET TOTALS			2590	

ABBREVIATIONS

C.A.A.	CORRUGATED ALUMINIUM ALLOY
C.B.	CATCH BASIN
C.S.	CORRUGATED STEEL
D.I.	DROP INLET
G.D.I.	GRATED DROP INLET
H.D.P.E.	HIGH DENSITY POLYETHYLENE
J.B.	JUNCTION BOX
M.H.	MANHOLE
N.S.	NARROW SLOT
P.V.C.	POLYVINYL CHLORIDE
R.C.	REINFORCED CONCRETE
T.B.D.I.	TRAFFIC BEARING DROP INLET
T.B.J.B.	TRAFFIC BEARING JUNCTION BOX
W.S.	WIDE SLOT

D085709

COMPUTED BY: SRG DATE: 02/14/2019

CHECKED BY: JDL DATE: 02/14/2019

PROJECT NO.	SHEET NO.
R-2530B	3D-23

NORTH CAROLINA DEPARTMENT OF TRANSPORTATION
DIVISION OF HIGHWAYS

**Note: Invert Elevations indicated are for Bid Purposes only and shall not be used for project construction stakeout.
See "Standard Specifications For Roads and Structures, Section 300-5".**

LIST OF PIPES, ENDWALLS, ETC. (FOR PIPES 48 INCHES & UNDER)

Column headings: LINE & STATION; SIZE; THICKNESS OR GAUGE; OFFSET; STRUCTURE NUMBER (FROM, TO); TOP ELEVATION (FT.); INVERT ELEVATION (FT.); INVERT ELEVATION (FT.); MINIMUM REQUIRED SLOPE (%); Drainage Pipe (RCP, CSP, CAAP, HDPE, or PVC) 12, 15, 18, 24, 30, 36, 42, 48; DO NOT USE RCP; DO NOT USE CSP; DO NOT USE CAAP; DO NOT USE HDPE; DO NOT USE PVC; C.S. PIPE 15, 18, 24, 30, 36 (.064, .064, .064, .079, .079); R. C. PIPE CLASS III 15, 18, 24, 30, 36, 42, 48; R. C. PIPE CLASS IV 15, 18, 24, 30, 36, 42, 48; R. C. PIPE CLASS V 15, 18, 30, 48; 15" SIDE DRAIN PIPE; 18" SIDE DRAIN PIPE; 24" SIDE DRAIN PIPE; ENDWALLS STD. 838.01 OR STD. 838.11 (UNLESS NOTED OTHERWISE) CY; DRAINAGE STRUCTURE MASONRY CY; QUANTITIES FOR DRAINAGE STRUCTURES (NOTE: TOTAL LIN. FT. FOR PAY QUANTITY SHALL BE A + (1.3 X B)) 0' THRU 5' EACH, A 5' THRU 10' LIN. FT., B 10' AND ABOVE LIN. FT.; C.B. STD. 840.01 OR STD. 840.02; FRAME, GRATES, AND HOOD STD. 840.03 GRATE TYPE E, F, G; CONCRETE TRANSITIONAL SECTION D.I. STD. 852.04 OR STD. 852.06; C.B. STD. 852.05; OPEN THROAT C.B. STD. 840.04 OR STD. 840.05; D.I. STD. 840.14 OR STD. 840.15; D.I. FRAME AND GRATES STD. 840.16; G.D.I. TYPE "A" STD. 840.17 OR STD. 840.26; G.D.I. TYPE "B" STD. 840.18 OR STD. 840.27; G.D.I. TYPE "D" STD. 840.19 OR STD. 840.28; G.D.I. (W.S. FLAT) FRAME W/ 2 GRATES STD. 840.20; G.D.I. (W.S. SAG) FRAME W/ 2 GRATES STD. 840.22; G.D.I. (N.S. SAG) FRAME W/ 2 GRATES STD. 840.24; G.D.I. (N.S. FLAT) FRAME W/ 2 GRATES STD. 840.29; J.B. STD. 840.31 OR STD. 840.32; T.B.J.B. STD. 840.34; T.B.D.I. STD. 840.35; 4" DRAINAGE PIPE (LIN. FT.); SPRING BOX STD. 840.41; M.H. FRAME AND COVER STD. 840.54; ADJUST C.B.; CB STD. 840D02 (SPECIAL DETAIL); TB2GI STD. 840D35 (SPECIAL DETAIL); 8" HDPE (LIN. FT.); 15" C.S. ELBOW; 18" C.S. ELBOW; 24" C.S. ELBOW; 30" C.S. ELBOW; 36" C.S. ELBOW; 4" CONCRETE PAVED DITCH (SY); MODIFIED CONC. FLUME; FLOWABLE FILL (CY); CONCRETE COLLARS CL. "B" STD. 840.72 (CY); CONCRETE AND BRICK PIPE PLUG STD. 840.71 (CY); PIPE REMOVAL (LIN. FT.); REMARKS.

LINE & STATION	OFFSET		FLOWABLE FILL (CY)	PIPE REMOVAL (LIN. FT.)	REMARKS
L 206+56	66	LT		23	REMOVE EX 15" RCP
L 206+93	64	LT		35	REMOVE EX 18" RCP
L 208+13	31	LT		61	REMOVE EX 24" RCP
L 217+23	35	LT		81	REMOVE EX 24" RCP
L 222+89	61	LT		60	REMOVE EX 15" RCP
L 225+11	34	LT		53	REMOVE EX 24" RCP
L 229+55	35	LT		53	REMOVE EX 18" RCP
L 233+68	60	LT		44	REMOVE EX 15" RCP
L 237+63	61	LT		19	REMOVE EX 18" RCP
L 238+44	60	LT		57	REMOVE EX 15" RCP
L 243+30	35	LT		65	REMOVE EX 18" RCP
L 245+62	11	LT		37	REMOVE EX 15" RCP
L 252+02	28	RT		57	REMOVE EX 18" RCP
L 256+05	36	RT		53	REMOVE EX 18" RCP
L 261+24	59	RT		25	REMOVE EX 12" RCP
L 263+04	59	RT		25	REMOVE EX 12" RCP
L 264+12	57	RT		40	REMOVE EX 15" RCP
L 268+34	1	RT		13	REMOVE EX 12" RCP
L 268+44	40	RT		60	REMOVE EX 18" RCP
L 274+99	43	RT		66	REMOVE EX JB AND EX 18" RCP
L 275+66	75	RT		138	REMOVE EX 18" RCP
L 277+16	42	RT		72	REMOVE EX 18" RCP
L 283+94	59	RT		41	REMOVE EX 15" RCP
L 284+48	53	LT		75	REMOVE EX JB AND EX 15" HDPE
L 285+20	24	LT		84	REMOVE EX DI AND EX 18" RCP
L 285+67	34	RT		72	REMOVE EX 18" RCP
L 290+36	67	RT		33	REMOVE EX 12" RCP
L 292+65	94	LT		16	REMOVE EX 12" RCP
L 292+86	19	RT		90	REMOVE EX 18" RCP
L 295+05	23	LT		17	REMOVE EX 15" RCP
L 295+09	36	LT		25	REMOVE EX 15" RCP
L 295+55	25	LT		67	REMOVE EX DI AND EX 36" RCP
L 297+30	32	RT		110	REMOVE EX 30" RCP
L 301+29	36	RT		52	REMOVE EX 18" RCP
L 309+88	38	RT		62	REMOVE EX 30" RCP
L 313+78	2	LT		117	REMOVE EX 18" RCP
L 318+47	37	RT		43	REMOVE EX 18" RCP
L 323+61	67	RT		39	REMOVE EX 15" HDPE
L 326+96	30	RT		120	REMOVE EX 18" RCP
L 329+78	36	RT		67	REMOVE EX DI AND EX 18" RCP
L 330+16	60	LT		84	REMOVE EX 15" RCP
L 330+22	69	RT		76	REMOVE EX DI AND EX 18" RCP
L 332+25	30	RT	3		
L 332+65	8	LT		38	REMOVE EX DI AND EX 18" RCP
L 335+22	30	RT		75	REMOVE EX DI AND EX 15" RCP
L 348+73	21	RT		85	REMOVE EX DI AND EX 15" RCP
L 348+74	85	RT	6		
L 349+30	22	RT		72	REMOVE EX JB AND EX 15" RCP
L 349+87	34	LT		84	REMOVE EX DI AND EX 15" RCP
L 352+96	96	RT		145	REMOVE EX DI AND EX 15" RCP
SHEET TOTALS			9	2926	

ABBREVIATIONS
- C.A.A. CORRUGATED ALUMINIUM ALLOY
- C.B. CATCH BASIN
- C.S. CORRUGATED STEEL
- D.I. DROP INLET
- G.D.I. GRATED DROP INLET
- H.D.P.E. HIGH DENSITY POLYETHYLENE
- J.B. JUNCTION BOX
- M.H. MANHOLE
- N.S. NARROW SLOT
- P.V.C. POLYVINYL CHLORIDE
- R.C. REINFORCED CONCRETE
- T.B.D.I. TRAFFIC BEARING DROP INLET
- T.B.J.B. TRAFFIC BEARING JUNCTION BOX
- W.S. WIDE SLOT

COMPUTED BY:	SRG	DATE:	02/14/2019
CHECKED BY:	JDL	DATE:	02/14/2019

NORTH CAROLINA DEPARTMENT OF TRANSPORTATION
DIVISION OF HIGHWAYS

PROJECT NO.	SHEET NO.
R-2530B	3D-24

Note: Invert Elevations indicated are for Bid Purposes only and shall not be used for project construction stakeout.
See "Standard Specifications For Roads and Structures, Section 300-5".

LIST OF PIPES, ENDWALLS, ETC. (FOR PIPES 48 INCHES & UNDER)

LINE & STATION	OFFSET		STRUCTURE NUMBER FROM	TO	Drainage Pipe (RCP, CSP, CAAP, HDPE, or PVC) 36	R. C. PIPE CLASS IV 15	FLOWABLE FILL CY	CONCRETE AND BRICK PIPE PLUG STD. 840.71 CY	PIPE REMOVAL LIN. FT.	REMARKS
L 356+90	92	RT							47	REMOVE EX 15" RCP
L 357+29	81	LT							89	REMOVE EX DI AND EX 15" RCP
L 365+07	65	RT							122	REMOVE EX 15" RCP
L 366+69	70	RT							20	REMOVE EX 15" RCP
L 367+40	9	RT							19	REMOVE EX 15" RCP
L 375+45	41	RT							131	REMOVE EX 60" RCP
L 384+84	64	RT							25	REMOVE EX 18" RCP
L 387+22	6	RT							33	REMOVE EX 18" RCP
L 388+45	64	RT							46	REMOVE EX 24" RCP
L 393+59	89	RT							42	REMOVE EX DI AND EX 15" RCP
L 393+83	2	RT							8	REMOVE EX DI AND EX 18" RCP
Y1 11+59	60	RT					19			
Y1 13+88	29	RT						0.045	50	REMOVE EX 15" RCP
Y1 13+95	3	LT							16	REMOVE EX JB AND 16' OF EX 15" RCP
Y1 14+33	4	RT							74	REMOVE EX DI AND EX 12" RCP
Y1 16+26	55	RT							33	REMOVE EX 15" RCP
Y1 17+55	68	RT							52	REMOVE EX 18" RCP
Y1 17+59	3	RT							84	REMOVE EX 24" RCP
Y1 17+60	88	RT							72	REMOVE EX 15" RCP
Y1 17+66	1	RT							12	REMOVE EX DI AND EX 15" RCP
Y1 18+72	57	RT							48	REMOVE EX 15" RCP
Y1 20+76	6	RT							6	REMOVE EX DI AND EX 15" RCP
Y1 24+33	56	RT							60	REMOVE EX 15" RCP
Y1 28+00	1	LT					4			
Y2 25+03	74	LT							114	REMOVE 2 @ 48" CMP'S
Y2 25+35	80	LT							33	REMOVE 12" EX RCP
Y2 29+34	20	RT							36	REMOVE 12" EX RCP
Y2 31+10	18	RT							56	REMOVE 12" EX RCP
Y2A 15+03	21	LT							50	REMOVE EX 15" RCP
Y2A 16+00	10	RT							55	REMOVE EX 15" RCP
Y4 14+52	1	LT							32	REMOVE EX 15" RCP
Y6 10+64	17	LT							33	REMOVE EX 15" RCP
Y6 11+81	19	LT							60	REMOVE EX 18" RCP
Y6 12+25	2	RT							45	REMOVE EX 24" RCP
Y7 17+50	16	LT							28	REMOVE EX 12" RCP
Y8 14+84	16	LT							28	REMOVE EX 12" RCP
Y8 17+49	1	RT							37	REMOVE EX 18" RCP
Y9 18+19	3	RT							34	REMOVE EX 15" RCP
Y12 12+38	1	LT							68	REMOVE EX 24" RCP
Y12 12+75	24	LT							32	REMOVE EX 15" RCP
Y12 12+78	28	RT							32	REMOVE EX 15" RCP
Y12 14+88	2	RT							56	REMOVE EX 15" RCP
Y13 16+43	16	RT							36	REMOVE EX 18" RCP
Y14 12+31	18	RT							21	REMOVE EX 15" RCP
Y14 13+64	21	LT							30	REMOVE EX 15" RCP
Y16 12+80	9	RT							51	REMOVE EX 15" RCP
Y16 14+59	2	LT							43	REMOVE EX 18" RCP
L 32+69	2	RT	0570			108			108	SEE TMP PLANS. REMOVE TEMP 15" RCP
L 34+34	8	LT	0571		12				12	SEE TEMP PLANS. REMOVE TEMP 36" CMP
L 34+83	0	CL	0572			104			104	SEE TMP PLANS. REMOVE TEMP 15" RCP
SHEET TOTALS					12	212	23	0.045	2323	

ABBREVIATIONS

- C.A.A. CORRUGATED ALUMINIUM ALLOY
- C.B. CATCH BASIN
- C.S. CORRUGATED STEEL
- D.I. DROP INLET
- G.D.I. GRATED DROP INLET
- H.D.P.E. HIGH DENSITY POLYETHYLENE
- J.B. JUNCTION BOX
- M.H. MANHOLE
- N.S. NARROW SLOT
- P.V.C. POLYVINYL CHLORIDE
- R.C. REINFORCED CONCRETE
- T.B.D.I. TRAFFIC BEARING DROP INLET
- T.B.J.B. TRAFFIC BEARING JUNCTION BOX
- W.S. WIDE SLOT

LL20034

COMPUTED BY:	SRG	DATE:	06/21/2019
CHECKED BY:	JDL	DATE:	06/21/2019

PROJECT NO.	SHEET NO.
R-2530B	3D-25

NORTH CAROLINA DEPARTMENT OF TRANSPORTATION
DIVISION OF HIGHWAYS

Note: Invert Elevations indicated are for Bid Purposes only and shall not be used for project construction stakeout.
See "Standard Specifications For Roads and Structures, Section 300-5".

LIST OF PIPES, ENDWALLS, ETC. (FOR PIPES 48 INCHES & UNDER)

LINE & STATION (SIZE / THICKNESS OR GAUGE)	OFFSET		STRUCTURE NUMBER FROM	STRUCTURE NUMBER TO	TOP ELEVATION (FT.)	INVERT ELEVATION (FT.)	INVERT ELEVATION (FT.)	MINIMUM REQUIRED SLOPE (%)	Drainage Pipe (RCP, CSP, CAAP, HDPE, or PVC) 12	15	18	24	30	36	42	48	DO NOT USE RCP	DO NOT USE CSP	DO NOT USE CAAP	DO NOT USE HDPE	DO NOT USE PVC	C.S. PIPE 15 (.064)	18 (.064)	24 (.064)	30 (.079)	36 (.079)
L 34+83	0	CL	0572																							
L 36+72	2	RT	0573																							
L 102+38	52	RT	1049	1050																						
L 102+24	37	RT	1050																							
L 101+95	41	LT	1051																							
			1051	1052																						
L 103+45	8	LT	1053																							
			1053	1054																						
L 102+95	76	LT	1055																							
L 115+78	40	LT	1150													124										
L 140+10	0	CL	1250							44																
L 157+00	1	RT																								
L 163+25	68	LT	1450																							
L 167+58	64	LT	1452																							
L 182+10	31	RT	1550																							
L 202+00	13	RT	1750							56																
L 217+22	6	LT	1851									12														
L 217+28	6	RT	1852																							
			1852	1853																						
L 238+35	10	RT	2050																							
L 243+22	0	CL	2051							12																
L 243+30	7	LT	2052								8															
L 243+41	0	CL	2053							12																
L 268+30	2	RT	2250							44																
L 290+00	15	RT	2350							64																
L 313+54	100	LT	2550								84															
L 315+00	1	RT	2551							48																
L 326+50	72	LT	2618																							
L 349+00	7	RT	2803																							
L 352+51	12	LT	2811																							
L 352+81	0	CL	2818																							
SHEET TOTALS										280	92	12				124										
PROJECT TOTALS									136	9644	3388	1600	1828	108	740	348						720	488	64	80	56

LINE & STATION	FROM	TO	R. C. PIPE CLASS III 15	18	24	30	36	42	48	R. C. PIPE CLASS IV 15	18	24	30	36	42	48	R. C. PIPE CLASS V 15	18	30	48	15" SIDE DRAIN PIPE	18" SIDE DRAIN PIPE	24" SIDE DRAIN PIPE	ENDWALLS STD. 838.01 OR STD. 838.11 (UNLESS NOTED OTHERWISE) CY	DRAINAGE STRUCTURE MASONRY CY
L 34+83	0572									104															
L 36+72	0573									120															
L 102+38	1049	1050										36													
L 102+24	1050																								
L 101+95	1051																								
	1051	1052										60													
L 103+45	1053																								
	1053	1054								64															
L 102+95	1055																				36				
L 115+78	1150																								
L 140+10	1250																								
L 157+00																									
L 163+25	1450																				24				
L 167+58	1452																				24				
L 182+10	1550									68															
L 202+00	1750																								
L 217+22	1851																								
L 217+28	1852																								
	1852	1853										180													
L 238+35	2050									124															
L 243+22	2051																								
L 243+30	2052																								
L 243+41	2053																								
L 268+30	2250																								
L 290+00	2350																								
L 313+54	2550																								
L 315+00	2551																								
L 326+50	2618																								
L 349+00	2803																								
L 352+51	2811																								
L 352+81	2818																								
SHEET TOTALS										480		276									84				
PROJECT TOTALS			2816	2352	2148	1148	1828	424	504	8144	3012	1684	1168	656	1280	44	276	340	52	424	1152	336	100	61.000	

QUANTITIES FOR DRAINAGE STRUCTURES — NOTE: TOTAL LIN. FT. FOR PAY QUANTITY SHALL BE A + (1.3 X B)

LINE & STATION	FROM	TO	0' THRU 5' (EACH)	A: 5' THRU 10' (LIN. FT.)	B: 10' AND ABOVE (LIN. FT.)	C.B. STD. 840.01 OR STD. 840.02	FRAME, GRATES, AND HOOD STD. 840.03 — GRATE TYPE E	F	G	CONCRETE TRANSITIONAL SECTION: D.I. STD. 852.04 OR STD. 852.06	C.B. STD. 852.05	OPEN THROAT C.B. STD. 840.04 OR STD. 840.05	D.I. STD. 840.14 OR STD. 840.15	D.I. FRAME AND GRATES STD. 840.16	G.D.I. TYPE "A" STD. 840.17 OR STD. 840.26	G.D.I. TYPE "B" STD. 840.18 OR STD. 840.27	G.D.I. TYPE "D" STD. 840.19 OR STD. 840.28	G.D.I. (W.S. FLAT) FRAME W/ 2 GRATES STD. 840.20	G.D.I. (W.S. SAG) FRAME W/ 2 GRATES STD. 840.22	G.D.I. (N.S. SAG) FRAME W/ 2 GRATES STD. 840.24	G.D.I. (N.S. FLAT) FRAME W/ 2 GRATES STD. 840.29	J.B. STD. 840.31 OR STD. 840.32	T.B.J.B. STD. 840.34	T.B.D.I. STD. 840.35	4" DRAINAGE PIPE (LIN. FT.)	SPRING BOX STD. 840.41	M.H. FRAME AND COVER STD. 840.54	ADJUST C.B.	CB STD. 840D02 (SPECIAL DETAIL)	TB2GI STD. 840D35 (SPECIAL DETAIL)	8" HDPE (LIN. FT.)	15" C.S. ELBOW	18" C.S. ELBOW	24" C.S. ELBOW	30" C.S. ELBOW	36" C.S. ELBOW	4" CONCRETE PAVED DITCH (SY)	MODIFIED CONC. FLUME	FLOWABLE FILL (CY)	CONCRETE COLLARS CL. "B" STD. 840.72 (CY)	CONCRETE AND BRICK PIPE PLUG STD. 840.71 (CY)	PIPE REMOVAL (LIN. FT.)	REMARKS
L 34+83	0572																																									104	SEE TMP PLANS. REMOVE TEMP 15" RCP
L 36+72	0573																																									120	SEE TMP PLANS. REMOVE TEMP 15" RCP
L 102+38	1049	1050																																				4				SEE TMP PLANS. TEMPORARY DRAINAGE
L 102+24	1050		1																				1																				SEE TMP PLANS. TEMPORARY DRAINAGE
L 101+95	1051		1																				1																				SEE TMP PLANS. REMOVE TEMP TBJB
	1051	1052																																								60	SEE TMP PLANS. REMOVE TEMP 24" RCP
L 103+45	1053		1														1			1																							SEE TMP PLANS. REMOVE TEMP 2GI
	1053	1054																																								64	SEE TMP PLANS. REMOVE TEMP 15" RCP
L 102+95	1055																																									36	SEE TMP PLANS. REMOVE TEMP 15" PIPE
L 115+78	1150																																					58				SEE TMP PLANS. TEMPORARY DRAINAGE
L 140+10	1250																																									44	SEE TMP PLANS. REMOVE TEMP 15" PIPE
L 157+00																																											PLYWOOD INLET PROTECTION (SEE SHEET 2C-15)
L 163+25	1450																																									24	SEE TMP PLANS. REMOVE TEMP 15" PIPE
L 167+58	1452																																									24	SEE TMP PLANS. REMOVE TEMP 15" PIPE
L 182+10	1550																																					3				SEE TMP PLANS. TEMPORARY DRAINAGE
L 202+00	1750																																									56	SEE TMP PLANS. REMOVE TEMP PIPE
L 217+22	1851																																									12	SEE TMP PLANS. REMOVE TEMP 24" PIPE
L 217+28	1852		1																			1					1																SEE TMP PLANS. REMOVE TEMP JB W/MH
	1852	1853																																				21				SEE TMP PLANS. TEMPORARY DRAINAGE
L 238+35	2050																																									124	SEE TMP PLANS. REMOVE TEMP 15" RCP
L 243+22	2051																																							0.045	12	SEE TMP PLANS. REMOVE TEMP 15" PIPE AND PLUG BOX
L 243+30	2052																																							0.065	8	SEE TMP PLANS. REMOVE TEMP 18" PIPE
L 243+41	2053																																							0.045	12	SEE TMP PLANS. REMOVE TEMP 15" PIPE
L 268+30	2250																																									44	SEE TMP PLANS. REMOVE TEMP 15" PIPE
L 290+00	2350																																									64	SEE TMP PLANS. REMOVE TEMP 15" PIPE
L 313+54	2550																																					6				SEE TMP PLANS. TEMPORARY DRAINAGE
L 315+00	2551																																									48	SEE TMP PLANS. REMOVE TEMP 15" PIPE
L 326+50	2618																																										PLYWOOD INLET PROTECTION (SEE SHEET 2C-15)
L 349+00	2803																																										PLYWOOD INLET PROTECTION (SEE SHEET 2C-15)
L 352+51	2811																																										PLYWOOD INLET PROTECTION (SEE SHEET 2C-15)
L 352+81	2818																																										PLYWOOD INLET PROTECTION (SEE SHEET 2C-15)
SHEET TOTALS			4														1			1			1	2				1												92		0.155	856	
PROJECT TOTALS			446	292.7		120	13	60	64	42	17	22	25	23	34	128	3	59	159	9	22	9	3	75	60	1	10	1	17	9	4	31	23	2	4	2	33	2	124	1.6923	0.265	11448	

ABBREVIATIONS

- C.A.A. CORRUGATED ALUMINIUM ALLOY
- C.B. CATCH BASIN
- C.S. CORRUGATED STEEL
- D.I. DROP INLET
- G.D.I. GRATED DROP INLET
- H.D.P.E. HIGH DENSITY POLYETHYLENE
- J.B. JUNCTION BOX
- M.H. MANHOLE
- N.S. NARROW SLOT
- P.V.C. POLYVINYL CHLORIDE
- R.C. REINFORCED CONCRETE
- T.B.D.I. TRAFFIC BEARING DROP INLET
- T.B.J.B. TRAFFIC BEARING JUNCTION BOX
- W.S. WIDE SLOT

D085709

COMPUTED BY:	SRG	DATE:	02/14/2019
CHECKED BY:	JDL	DATE:	02/14/2019

NORTH CAROLINA DEPARTMENT OF TRANSPORTATION
DIVISION OF HIGHWAYS

PROJECT NO.	SHEET NO.
R-2530B	3D-26

Note: Invert Elevations indicated are for Bid Purposes only and shall not be used for project construction stakeout. See "Standard Specifications For Roads and Structures, Section 300-5".

LIST OF PIPES, ENDWALLS, ETC. (FOR PIPES 54 INCHES & OVER)

LINE & STATION / SIZE / THICKNESS OR GAUGE	OFFSET	STRUCTURE NUMBER FROM	STRUCTURE NUMBER TO	TOP ELEVATION FT.	INVERT ELEVATION FT.	INVERT ELEVATION FT.	MINIMUM REQUIRED SLOPE %	Drainage Pipe (RCP, CSP, CAAP, HDPE, or PVC) 12	15	18	24	30	36	42	48	DO NOT USE RCP	DO NOT USE CSP	DO NOT USE CAAP	DO NOT USE HDPE	DO NOT USE PVC	C. S. PIPE 12 .064	15 .064	18 .064	24 .064	30 .079	36 .079	42 .109	48 .109	R. C. PIPE CLASS III 15	18	24	30	36	42	48	54	60	66
L1 115+79	8 LT	1102		564.8																																		
		1102	1101		555.5	554.7																															88	
L1 116+17	80 RT	1106	1102		556.5	555.5																															96	
L1 236+97	80 LT	1920	2001		418.5	413.5																																196
L 375+34	0 CL	3025	3026		295.1	291.0																																
SHEET TOTALS																																					184	196
PROJECT TOTALS																																					184	196

LINE & STATION / SIZE / THICKNESS OR GAUGE	R. C. PIPE CLASS IV 15	18	24	30	36	42	48	54	60	66	72	R. C. PIPE CLASS V 15	18	24	30	36	42	48	ENDWALLS STD. 826.01 OR STD. 826.11 (UNLESS NOTED OTHERWISE) CY	REINFORCED ENDWALLS CY	DRAINAGE STRUCTURE MASONRY CY	QUANTITIES FOR DRAINAGE STRUCTURES NOTE: TOTAL LIN. FT. FOR PAY QUANTITY SHALL BE A + (1.3 X B) 0' THRU 5' EACH	5' THRU 10' A LIN. FT.	10' AND ABOVE B LIN. FT.	C.B. STD. 840.01 OR STD. 840.02	FRAME, GRATES, AND HOOD STD. 840.03 GRATE TYPE E	F	G	OPEN THROAT C.B. STD. 840.04 OR STD. 840.05	D.I. STD. 840.14 OR STD. 840.15	D.I. FRAME AND GRATES STD. 840.16	G.D.I. TYPE "A" STD. 840.17 OR STD. 840.26	G.D.I. TYPE "B" STD. 840.18 OR STD. 840.27	G.D.I. TYPE "D" STD. 840.19 OR STD. 840.28	G.D.I. (W.S. FLAT) FRAME W/ 2 GRATES STD. 840.20	G.D.I. (W.S. SAG) FRAME W/ 2 GRATES STD. 840.22	G.D.I. (N.S. SAG) FRAME W/ 2 GRATES STD. 840.24	G.D.I. (N.S. FLAT) FRAME W/ 2 GRATES STD. 840.29	J.B. STD. 840.31 OR STD. 840.32	T.B.J.B. STD. 840.34	T.B.D.I. STD. 840.35	G.D.I. TYPE "A" STD. 840D17 (SPECIAL DETAIL)	M.H. FRAME AND COVER STD. 840.54	BERM DITCH OUTLET STD. 850.10 (PER EACH)	FLOWABLE FILL CY	CONCRETE COLLARS CL. "B" STD. 840.72 CY	CONCRETE AND BRICK PIPE PLUG STD. 840.71 CY	PIPE REMOVAL LIN. FT.	REMARKS
L1 115+79																					6.524										1					1									SPECIAL DESIGN, SEE SHEET 2C-12.
L1 116+17																				5.600																													
L1 236+97																				6.300																													
L 375+34											248									14.200																													
SHEET TOTALS											248									26.100	6.524										1					1													
PROJECT TOTALS											248									26.100	6.524										1					1													

ABBREVIATIONS

C.A.A.	CORRUGATED ALUMINIUM ALLOY
C.B.	CATCH BASIN
C.S.	CORRUGATED STEEL
D.I.	DROP INLET
G.D.I.	GRATED DROP INLET
H.D.P.E.	HIGH DENSITY POLYETHYLENE
J.B.	JUNCTION BOX
M.H.	MANHOLE
N.S.	NARROW SLOT
P.V.C.	POLYVINYL CHLORIDE
R.C.	REINFORCED CONCRETE
T.B.D.I.	TRAFFIC BEARING DROP INLET
T.B.J.B.	TRAFFIC BEARING JUNCTION BOX
W.S.	WIDE SLOT

COMPUTED BY: RSH DATE: 2/13/2019
CHECKED BY: JWM DATE: 2/13/2019

5/28/99

PROJECT REFERENCE NO.	SHEET NO.
R-2530B	3G-1

Kimley»Horn ©2018
421 FAYETTEVILLE STREET, SUITE 600
RALEIGH, NC 27601

REVISIONS

SUMMARY OF SUBSURFACE DRAINAGE

LINE	Station	Station	Location LT/RT	Drain Type* UD/BD/SD	LF
CONTINGENCY				UD	500
				TOTAL LF	500
				SAY	500

*UD = Underdrain
*BD = Blind Drain
*SD = Subsurface Drain

SUMMARY OF AGGREGATE SUBGRADE / STABILIZATION

LINE	Station	Station	Aggregate Type* ASU(1/2)/AST	Aggregate Thickness INCHES	Shallow Undercut CY	Class IV Subgrade Stabilization TONS	Geotextile for Soil Stabilization SY	Stabilizer Aggregate TONS	Class IV Aggregate Stabilization TONS
–L–	177+25	179+00					1230		
–L–	185+50	187+50					1470		
–L–	19+61	396+23							
–RBT–	10+00	13+02							
CONTINGENCY					750	2200	11050	250	
			TOTAL CY/TONS/SY		750	2200**	13750**	250	0
				SAY	750	2200**	13750**		

*ASU(1/2) = Aggregate Subgrade (Type 1 or 2)
*AST = Aggregate Stabilization
**Total tons of "Geotextile for Class IV Subgrade Stabilization" and total square yards of "Geotextile for Soil Stabilization" are only the estimated quantities for ASU(1/2)/AST and may only represent a portion of the geotextile quantity shown in the Item Sheets of the Proposal.

SUMMARY OF ROCK PLATING

LINE	Beginning Slope (H:V)	Approx. Station	Ending Slope (H:V)	Approx. Station	Location LT/RT	Rock Plating Detail No. 1/2/3/4	Rip Rap Class* 1/2/B	Rock Plating SY
–L–	1.5:1	362+50	1.5:1	364+00	RT	1	1	375
							TOTAL SY	375

*Use Class I, II or B Rip Rap if Rip Rap Class is not shown for Rock Plating location.

SUMMARY OF GEOTEXTILE FOR PAVEMENT STABILIZATION

LINE	Approx. Station	Approx. Station	SY	Offset
–L–	52+50	54+00	600	RT
–L–	93+00	94+50	600	RT
–L–	101+00	102+50	317	LT
–L–	118+50	121+00	750	RT
–L–	126+50	132+50	3867	LT
–L–	143+75	144+50	417	LT
–L–	144+50	145+50	1533	LT/RT
–L–	145+50	145+75	225	LT
–L–	147+00	152+50	7822	LT/RT
–L–	156+50	158+50	2756	LT/RT
–L–	196+50	198+50	1178	LT
–L–	198+50	199+50	1300	LT/RT
–L–	199+50	200+00	517	RT
–L–	210+50	220+00	7178	RT
–L–	222+00	227+50	3239	RT
–L–	227+50	228+50	833	LT/RT
–L–	236+00	238+00	1578	LT/RT
–L–	238+00	240+50	1583	RT
–L–	243+50	245+00	850	LT/RT
–L–	256+50	257+50	700	RT
–L–	259+00	260+00	711	LT/RT
–L–	276+50	279+00	1361	RT
–L–	285+00	288+00	2567	LT/RT
–L–	292+50	295+00	1389	LT
–L–	303+00	305+00	1378	RT
–L–	305+00	310+00	5888	LT/RT
–L–	312+00	320+75	5250	LT
–L–	347+50	349+50	133	RT
–L–	375+00	377+25	1325	LT
–L–	380+00	381+00	178	RT
–L–	381+00	384+00	2133	LT/RT
–L–	384+00	385+50	917	LT
–Y12–	12+00	12+80	138	LT/RT
–Y12–	13+00	15+00	578	LT
–Y15–	12+20	13+00	133	LT
		TOTAL SY	61922	
		SAY	62000	

SUMMARY OF PRE–SPLITTING OF ROCK

LINE	Beginning Rock Cut Slope (H:V)	Approx. Station	Ending Rock Cut Slope (H:V)	Approx. Station	Location LT/RT	Pre–Splitting of Rock SY
–L–	2:1	98+25	2:1	101+75	RT	2056
–L–	6:1	104+50	6:1	106+25	LT/RT	1462
–L–	6:1	109+75	6:1	111+25	LT/RT	1436
–L–	6:1	117+25	6:1	120+50	LT	1830
–L–	2:1	122+25	2:1	126+75	LT/RT	3562
–L–	2:1	137+25	2:1	141+25	LT	3224
–L–	4:1	159+25	4:1	161+25	LT/RT	1174
–L–	4:1	174+75	4:1	177+25	LT/RT	2240
–L–	2:1	183+75	2:1	184+25	RT	20
–L–	2:1	187+25	2:1	190+50	LT/RT	3066
–L–	2:1	193+75	2:1	195+25	RT	1361
–L–	2:1	200+50	2:1	207+75	LT/RT	8965
–L–	6:1	263+50	6:1	269+50	LT/RT	5307
–L–	6:1	273+25	6:1	274+25	LT	231
–L–	2:1	277+25	2:1	278+75	LT	243
–L–	4:1	287+75	4:1	289+25	LT	981
–L–	2:1	297+25	2:1	304+25	LT	5215
–L–	2:1	321+25	2:1	328+25	LT/RT	7524
–L–	6:1	366+25	6:1	369+25	LT/RT	2393
–L–	6:1	377+75	6:1	378+75	LT	1062
					TOTAL SY	53353
					SAY	53400

SUMMARY OF REINFORCED SOIL SLOPES AND SLOPE EROSION CONTROL

LINE	Beginning Slope/RSS (H:V)	Approx. Station	Ending Slope/RSS (H:V)	Approx. Station	Location LT/RT	Reinforced Soil Slope (RSS)	Geocells SY	Coir Fiber Mat SY	Matting For Erosion Control SY
–L–	1.5:1	147+15	1.5:1	147+65	LT	139			
–L–	1:1	298+00	1.87:1	303+00	RT	1154			
–L–	2:1	356+75	1:1	359+00	RT	297			
–L–	1.5:1	362+50	1.5:1	364+00	RT	750			
					TOTAL SY	2340	0	0*	0**
					SAY	2350			

*Total Square Yards of "Coir Fiber Mat" is only the estimated quantity for slopes steeper than 2:1 (H:V) and may only represent a portion of the coir fiber mat quantity shown in the Item Sheets of the Proposal.

**Total Square Yards of "Matting For Erosion Control" is only the estimated quantity for RSS and may only represent a portion of the matting quantity shown in the Item Sheets of the Proposal.

2/14/2019

PROJ. REFERENCE NO.	SHEET NO.
R-2530B	3P-1

STATE OF NORTH CAROLINA
DIVISION OF HIGHWAYS

PARCEL INDEX SHEET

PARCEL No.	SHEET No.	PROPERTY OWNER NAME	DEED BOOK
1	4,32	SOUTH CENTRAL OIL CO. INC	DB 267 PG 438
2	4	EAST ALBEMARLE SCHOOL	DB 175 PG 92
3	4	OWNER UNKNOWN	DB UNKNOWN PG UNKNOWN
4	4	SOVEREIGN RA II LLC	DB 1237 PG 462
5	4	SOUTH CENTRAL OIL CO. INC	DB 267 PG 438
6	4,32	KALOGEROMITROS BROTHERS PROP.	DB 820 PG 313
7	4	NNN WG ALBEMARLE LLC	DB 1355 PG 239 PB 20 PG 9
8	4	FIRST BANK INC	DB 1143 PG 46 PB 19 PG 218
9	4,32	KALOGEROMITROS BROTHERS PROP.	DB 898 PG 417
10	4,32	H/S ALBEMARLE LLC	DB 1143 PG 42 DB 823 PG 947 PB 17 PG 409
11	4,5	ALDINC LLC	DIV 466 ST 7 DB 888 PG 300
12	4	SOUTH CENTRAL OIL CO. INC	DB 720 PG 704
13	4,5	LINDA AN L CRESS	DB 382 PG 676
14	5	RAMA REALTY LLC	DB 1058 PG 266
15	5	CITY OF ALBEMARLE ABC BOARD	DB 978 PG 248 DB 562 PG 588 PB 02 PG 106
16	5	DERICK J & HEATHER L PEGRAM	DB 1249 PG 300
17	5	CITY ELECTRIC	DB 693 PG 398
18	5	SOUTH CENTRAL OIL CO. INC.	DB 1091 PG 319 PB 02 PG 106
19	5	JACKSON M & PENNY L MORTON	DB 819 PG 391
20	5	STANLY SQUARE INC.	DB 383 PG 886 PB 13 PG 60
21	5	DILLON W LAMBERT ET AL	DB 1047 PG 276
22	5	ALAN HOWARD	DB 341 PG 873
23	5	ALBEMARLE OIL COMPANY	DB 1574 PG 249
24	5	A.L. LOWDER	DB 551 PG 304 PB 2 PG 106
25	5	GUSTAVO G. VENEGAS	DB 1481 PG 34
26	5,34	JAMES J NOLAN	DB 1058 PG 648 PB 02 PG 106
27	5, 6, 33	CITADEL/STANLY GARDENS OF MEMORIAL	DB 783 PG 134
28	5,6	CHARLES E. & NANCY T. BURRIS	DB 872 PG 643 PB 02 PG 106
29	6	CHARLES E. & NANCY T. BURRIS	DB 872 PG 643 PB 02 PG 106
30	6	LEWIS FURR ET AL	DB 1306 PG 66 PB 02 PG 106
31	6	LEWIS FURR ET AL	DB 1306 PG 66 PB 02 PG 106
32	6	CHUCKY L NANCE	DB 1342 PG 404 PB 02 PG 106
33	5, 6, 34	V F W POST 2908	DB 150 PG 66
34	6	SOUTH CENTRAL OIL CO. INC.	DB 318 PG 422
35	6	TOMMY ALLEN MORTON	DB 225 PG 117

PARCEL No.	SHEET No.	PROPERTY OWNER NAME	DEED BOOK
36	6	TOMMY A & BEATRICE E MORTON	DB 875 PG 309 PB 02 PG 106
37	6	BRIAN M & MELISSA E SANDERS	DB 1307 PG 733 PB 02 PG 106
38	6,7	SOUTH CENTRAL OIL CO. INC.	DB 720 PG 704
39	6	BROADUS EUDY	DB 155 PG 152 PB 02 PG 106
40	6,7	BROADUS EUDY	DB 372 PG 685 PB 02 PG 106
41	7	PAUL BOWERS & WIFE, TAMMY BOWERS	DB 1463 PG 972
42	7	CLARENCE ANDERSON	DB 355 PG 930
43	7	DAVID T LOWDER & M L YARBOUGH	DB 1136 PG 562 PB 02 PG 106
44	7	RRMM, INC.	DB 1544 PG 916
45	7	GEORGE INGRAM & WIFE, SHERRIE INGRAM	DB 1634 PG 944
46	7	WALTER T & SHARON TARLTON III	DB 1323 PG 738 PB 02 PG 106
47	7	GARY L & LOU L WHITLEY SR	DB 1206 PG 105 DB 356 PG 05 PB 02 PG 106
48	7	WOODROW W. DENNIS HEIRS	DB 139 PG 235
49	7	ROBERT C & ELIZABETH F SAVILLE	DB 690 PG 453
50	7	ANDERSON GROVE BAPTIST CHURCH INC	DB 1294 PG 1014 DB 815 PG 132 DB 697 PG 964 PB 21 PG 159
51	7	GARY J & NANCY L DEECK	DB 808 PG 170 PB 02 PG 106
52	7	HOYLE DALE POPLIN, JR., ET AL	DB 1615 PG 725
53	7,8	ANNIE G. DENNIS ET AL	DB 1494 PG 213
54	7	Z.D. DENNIS JR. REVOC LIVING TRUST	DB 1333 PG 223
56	7	JUNE ALLEN	DB 372 PG 664
57	7,8	JUNE ALLEN	DB 328 PG 852
58	8	HOYLE DALE POPLIN, JR., ET AL	DB 1615 PG 725
59	8	HOYLE DALE POPLIN, JR., ET AL	DB 1615 PG 725
60	8	JAMES A & FARRIE L NORMAN	DB 880 PG 73
61	8	DOYLE T. & MARY A POPLIN TRUST	DB 1316 PG 500 DB 1272 PG 98
62	8	KYLE DORSEY & WIFE, BRITTANY DORSEY	DB 1587 PG 852
63	8	STEPHEN HEATH EFIRD	DB 824 PG 917
64	8	STEPHEN EFIRD	DB 824 PG 913
65	8	ERIC FRANKLIN EFIRD	DB 824 PG 915
66	8	EDWARD RILEY WHITLEY JR.	DB 596 PG 660
67	8,9	ALEX TRENT DENNIS	DB 1486 PG 875
68	8,9	PATRICIA HATLEY	DB 373 PG 474
69	8,9	ANNIE GRAY DENNIS	DB 167 PG 406
70	9	HAROLD MICHAEL KENDALL	DB 335 PG 399
71	9	JERRY HOLT SR. AND CAROLYN HOLT	DB 1532 PG 309

PROJ. REFERENCE NO.	SHEET NO.
R-2530B	3P-2

STATE OF NORTH CAROLINA
DIVISION OF HIGHWAYS

PARCEL INDEX SHEET

PARCEL No.	SHEET No.	PROPERTY OWNER NAME	DEED BOOK
72	9	CITY OF ALBEMARLE	DB 1126 PG 113
73	9	CONLEY HOWELL	DB 508 PG 231 PB 15 PG 33
74	9, 10	CYBERDYNE PROPERTY DEVELOPMENT GROUP, LLC	DB 1508 PG 44
75	9	BOBBY F & SANDRA R BEAMAN	DB 508 PG 155 PB 15 PG 33
76	9	STANLY WATER & SEWER AUTHORITY	DB 1338 PG 834 PB 10 PG 52
77	9, 10	AMY CURLEE	DB 614 PG 511
78	9, 10	JOHN C HOLBROOK JR.	DB 391 PG 418 PB 03 PG 05
79	9, 10	BOBBY F & SANDRA R BEAMAN	DB 260 PG 287 PB 260 PG 284 PB 03 PG 05
80	10	STANLY CO. BOARD OF EDUCATION	DB 501 PG 38
81	10	THADDEUS A FURR	DB 198 PG 268
82	10	ALICE M. BEAMAN	DB 1100 PG 40 PB 03 PG 05
83	10	JOSEPH J MCRAE JR.	DB 657 PG 185 PB 03 PG 05
84	10	TIMOTHY PARRISH	DB 1347 PG 913
85	10, 11	JAMES J SCHAD	DB 1081 PG 427
86	10	THADDEUS A FURR	DB 150 PG 139
87	10, 11	ROBERT A & KRISTY L WILHOIT	DB 1408 PG 942
88	11, 12	WESFELL LIMITED PARTNERSHIP	DB 966 PG 1000 DB 964 PG 621
89	10, 11, 12, 13	WESFELL LIMITED PARTNERSHIP	DB 966 PG 1000 DB 964 PG 621
90	12	BERNICE B WHITLEY	DB 1204 PG 376
91	12, 13	JOHN CLIFTON WHITLEY	DB 356 PG 5
92	12, 13	JAMES PECK, JR. & TERRY ALMOND PECK	DB 1366 PG 218
93	13	GUS SCHAD	DB 987 PG 240
94	13	TJ VENTURES LLC	DB 1328 PG 408
95	13	STONY GAP PROPERTIES LLC	DB 1370 PG 1000
96	13, 34	DR JOEL LEE MAULDIN SR. HEIRS	DB 68 PG 175
97	13	D & G PROPERTIES	DB 540 PG 878
98	13	TJ VENTURES LLC	DB 1328 PG 405
99	13, 14, 34	STONY GAP PROPERTIES LLC	DB 1370 PG 1000 DB 187 PG 245
100	13, 14	GUS SCHAD	DB 1026 PG 436
101	13, 14	TJ VENTURES LLC	DB 1328 PG 405 PB 06 PG 148
102	14	JENEECE LOWDER SMITH	DB 369 PG 628
102Z	14	JENEECE LOWDER SMITH	DB 369 PG 628
103	14	JENEECE LOWDER SMITH	DB 355 PG 13
104	14, 15, 34	BARRIER FAMILY LIMITED PARTNERSHIP	DB 1100 PG 857 PB 11 PG 55
105	14,15	JENEECE LOWDER SMITH	DB 231 PG 8 DB 976 PG 637

PARCEL No.	SHEET No.	PROPERTY OWNER NAME	DEED BOOK
105Z	15	JENEECE LOWDER SMITH	DB 231 PG 8 DB 976 PG 637
106	15	ZULA M & JOE ALMOND	DB 306 PG 23 DB 381 PG 789
108	15	JANE COX HUNEYCUTT	DB 550 PG 37 PB 01 PG 272
108A	15	DANIEL SHANE HUNEYCUTT	DB 1489 PG 504 PB 01 PG 272
109	15	DONALD A & ROBIN B SHAVER	DB 395 PG 341
110	15	JOHNNY W & JUDY S BARBEE JR	DB 231 PG 145 DB 594 PG 73
112	15,16	EAST SIDE VOLUNTEER FIRE DEPARTMENT	DB 286 PG 116 DB 1575 PG 722
113	15, 16	TROY A & CRYSTAL F STOCKTON	DB 591 PG 62 PB 01 PG 272
115	16	STONY GAP PROPERTIES, LLC	DB 1370 PG 1000 PB 01 PG 272
116	16	THOMAS C PHILLIPS	DB 197 PG 7
117	16, 17	STONY GAP PROPERTIES, LLC	DB 1370 PG 1000 PB 01 PG 272
118	16, 17	THOMAS C & HAZEL P PHILLIPS	DB 333 PG 989
119	17	VERNON E FURR & S F WINSLOW	DB 1300 PG 231 PB 01 PG 272
120	17, 18, 19	MCNEIL ROAD ASSOCIATES INC.	DB 380 PG 545
121	17	WILLIAM & APRIL D HARRYMAN	DB 1035 PG 296 PB 01 PG 272
122	17	VERNON E FURR & S F WINSLOW	DB 1300 PG 231
123	17	RICHARD W MORRIS	DB 614 PG 232 PB 12 PG 16
124	17, 18, 19	TODD SCHAD	DB 1117 PG 645
125	18, 19	FRANCES C UNDERWOOD	DB 726 PG 526
126	18, 19	PATRICIA U WYNNE ET AL	DB 1098 PG 4 PB 19 PG 80
127	19	FRANCES C UNDERWOOD	DB 726 PG 526
128	18, 19	G S DEVELOPMENT CORP.	DB 1321 PG 95
129	19, 20	JAMES J SCHAD	DB 1035 PG 293
130	19, 20, 21	FRANCES C UNDERWOOD	DB 726 PG 526
131	20	ANDREW S UNDERWOOD ET AL	DB 1098 PG 7 PB 19 PG 80
132	20	PATRICIA WYNNE ET AL	DB 1098 PG 4 PB 19 PG 80
133	20, 21	OSCAR BANKS HINSON	DB 303 PG 477; DB 303 PG 480
134	21	DEBBIE LYNN THORPE & VELVET M. MOTSINGER	DB 1153 PG 278
135	21	DAVID W HINSON ET AL	DB 1159 PG 747
136	21	DAVID WAYNE HINSON	DB 1159 PG 750
137	21	BRENDA AUTRY	DB 502 PG 943
138	21, 22	JTD ASSOICATES, LLC	DB 1360 PG 375
139	21	DEBBIE L & V MOTSINGER THORPE	DB 1155 PG 991
140	21, 22	DIVYA LLC	DB 1038 PG 156
141	22	EDWARD D ROBERSON	DB 357 PG 931 DB 360 PG 579

PROJ. REFERENCE NO.	SHEET NO.
R-2530B	3P-3

STATE OF NORTH CAROLINA
DIVISION OF HIGHWAYS

PARCEL INDEX SHEET

PARCEL No.	SHEET No.	PROPERTY OWNER NAME	DEED BOOK
142	22	KENNETH HELDERMAN	DB 1037 PG 430
143	22	BETTY ANDREWS	DB 328 PG 979
144	22,23	KENNETH HELDERMAN	DB 1037 PG 0430
145	22	STANLEY WATER & SEWER AUTHORITY	DB 1207 PG 442
146	22, 23, 24	GARY W. LATON	DB 1434 PG 169
146A	22	STANLEY WATER & SEWER AUTHORITY	DB 1207 PG 455
147	23	GERALD B & BRENDA HONEYCUTT	DB 367 PG 330
148	23	THOMAS L & JEAN LATON	DB 387 PG 415
149	23	THOMAS L & JEAN E LATON	DB 387 PG 424
150	23, 24	SHANNON R. HUNEYCUTT, WIDOW	DB 1498 PG 835
151	24, 25	CUSTOM DOORS	DB 783 PG 893
152	24	GARY W. LATON	DB 1434 PG 169
153	24, 25	RONALD F & SUE B GRIFFIN	DB 820 PG 690 PB 15 PG 23
154	24, 25	RONALD F & SUE B GRIFFIN	DB 820 PG 690 PB 15 PG 23
155	25	ROCKY L & ANNETTE M STARNES	DB 1009 PG 74 PB 15 PG 24
156	25	GUS SCHAD	DB 712 PG 262 PB 15 PG 24
157	25, 26	CALDWELL A & PAM HOLBROOK JR.	DB 885 PG 432
158	25, 26	GUS SCHAD	DB 712 PG 262 PB 15 PG 24
159	25, 26	GUS SCHAD	DB 584 PG 312 PB 15 PG 25
160	26	PROGRESS ENERGY CAROLINAS, INC	PB 15 PG 25
161	26, 27	PITLIK FAMILY TRUST, MARGARET SHEA PITLIK AND MICHAEL PITLIK	DB 1575 PG 974 PB 15 PG 26
162	26, 27	JEAN ANN STOLLERY ESTATE	DB 373 PG 257 PB 5 PG 105 DB 758 PG 825
163	26, 27	PROGRESS ENERGY CAROLINAS, INC.	PB 15 PG 25
164	27	RAYMOND G. SMITH	DB 1533 PG 601 PB 05 PG 105
165	27	PROGRESS ENERGY CAROLINAS, INC	N/A
167	27	CAROLINA POWER & LIGHT COMPANY	NO DEED FOUND
168	27, 28	PROGRESS ENERGY CAROLINAS, INC	DB 471 PG 222
169	27, 28	CHARLES R MANESS	DB 236 PG 496
170	27, 28	VICKIE LYNN SAUNDERS	DB 210 PG 563 DB 241 PG 841
171	28	JAMES ANTHONY NORMAN JR.	DB 320 PG 456
173	28, 29	DUKE ENERGY PROGRESS, LLC SWIFT ISLAND ACCESS AREA	DB 471 PG 222
173A	28, 29	DUKE ENERGY PROGRESS, LLC	DB 471 PG 222
174	28	VICKIE LYNN SAUNDERS	DB 241 PG 841
175	28, 29	MCRAE INDUSTRIES INC.	DB 182 PG 733
178	29	RICHARD GRIFFIN	DB 580 PG 58 DB 732 PG 824 PF F PG 96B

PARCEL No.	SHEET No.	PROPERTY OWNER NAME	DEED BOOK
179	29	NEW SOUTH REALTY, INC.	DB 501 PG 461
180	29	WANDA LEMONS	DB 227 PG 63 DB 732 PG 826 DB 393 PG 195 DB 462 PG 149
182	29	TERRY GILBERT	DB 213 PG 821
183	29, 30	SAMUEL MOODY LEMONS III	DB 459 PG 793 PLAT D SLIDE 66-B
184	29	SAMUEL MOODY LEMONS III	DB 227 PG 667
185	29, 30	THOMAS A. & AMANDA F. BRUTON	DB 370 PG 273
186	30	DONALD P DAVIS	DB 333 PG 775
187	30	THOMAS H LEMONS	DB 512 PG 874
188	30	DOLON CORBETT	DB 370 PG 273
189	30	BOULDER ASSOCIATES LLC	DB 685 PG 385
190	30	RONALD L PARTRIDGE	DB 568 PG 515
191	30	UWHARRIE MARINE SALES & SERVICE LLC	DB 539 PG 035
192	30, 31	TOMMY A BLAKE	DB 246 PG 036
193	30, 31	KENNETH R FURR	BY WILL
194	31	CHARLES R MANESS	DB 285 PG 104
195	31	SAMUEL HORACE MCCALL III	DB 244 PG 695
196	1, 32	EASTSIDE RENTALS, LLC	DB 1598 PG 175
197	32	GUY PROPERTIES LLC	DB 737 PG 937
198	1, 32	H/S ALBEMARLE LLC	DB 1143 PG 42 DB 823 PG 947 PB 17 PG 409
199	32	LUBELL INC.	DB 378 PG 531
202	32	LOWES HOME CENTER INC.	DB 808 PG 234 PB 17 PG 409
203	32	CREH LLC	DB 652 PG 549
206	5, 34	KEITH AND NANCY CARPENTER	DB 1437 PG 249
208	34	STONY GAP PROPERTIES LLC	DB 1370 PG 1000 DB 187 PG 245
209	22	DALE & SHARON A HONEYCUTT	DB 389 PG 885
210	22	HONEYCUTT TRUCKING INC.	DB 800 PG 291
211	25	STEPHEN C & DEBORAH R COOPER	DB 1163 PG 79 PB 15 PG 24
212	26	KEITH CARPENTER	DB 1313 PG 556 PB 15 PG 25
213	28	BAYTREE WATERFRONT PROPERTIES INC.	DB 225 PG 878 PLAT SLIDE B-339
214	28	LINDA GODWIN	DB 190 PG 245
215	28	ROBERT B JORDAN III AND WIFE SARAH C JORDAN	DB 797 PG 716
216	32	JUNE ALLEN	DB 483 PG 726
217	32	EAST SIDE RENTALS, LLC	DB 1598 PG 175
218	32,33	STANLY COUNTY CDJR PROPERTIES, LLC	DB 1625 PG 365
219	32, 33	CHARLES E. MOODY AND WIFE, JUDY T. MOODY	DB 1609 PG 793

PROJ. REFERENCE NO.	SHEET NO.
R-2530B	3P-4

STATE OF NORTH CAROLINA
DIVISION OF HIGHWAYS

PARCEL INDEX SHEET

PARCEL No.	SHEET No.	PROPERTY OWNER NAME	DEED BOOK
220	33	ONATE INC.	DB 608 PG 60
221	33	NTI CAPITAL GROUP LLC	DB 884 PG 810
222	33	NTI CAPITAL GROUP LLC	DB 884 PG 810
223	33	VALLEN PROPERTIES LLC	DB 932 PG 233
224	33	LANCE INC.	DB 332 PG 900
225	33	TERRY MARSHAL DENNIS, SR, ET AL	DB 1186 PG 204
226	33	COUNTY OF STANLY	DB 1234 PG 461 PB 19 PG 296
227	33	PEGGY L. SIMPSON	DB 1270 PG 388
228	5, 33	PEJA INC.	DB 904 PG 730
229	7	CARLA R TUCKER	DB 1265 PG 294

PARCEL No.	SHEET No.	PROPERTY OWNER NAME	DEED BOOK

DocuSign Envelope ID: 9A1B5E98-C5A3-4E37-9D0C-75C472292803

Kimley»Horn ©2018
421 FAYETTEVILLE STREET, SUITE 600
RALEIGH, NC 27601

RIGHT-OF-WAY REV.
CONST. REV.

PROJECT REFERENCE NO.	SHEET NO.
R-2530B	4

ROADWAY DESIGN ENGINEER
NORTH CAROLINA PROFESSIONAL SEAL ENGINEER JEFFREY W. MOORE
DocuSigned by: 044436 A4594B4B61772480
8/8/2019

HYDRAULICS ENGINEER
NORTH CAROLINA PROFESSIONAL SEAL ENGINEER JASON D. LAWING
DocuSigned by: 032013 A7A0A9A0A7F7480
8/8/2019

DOCUMENT NOT CONSIDERED FINAL UNLESS ALL SIGNATURES COMPLETED

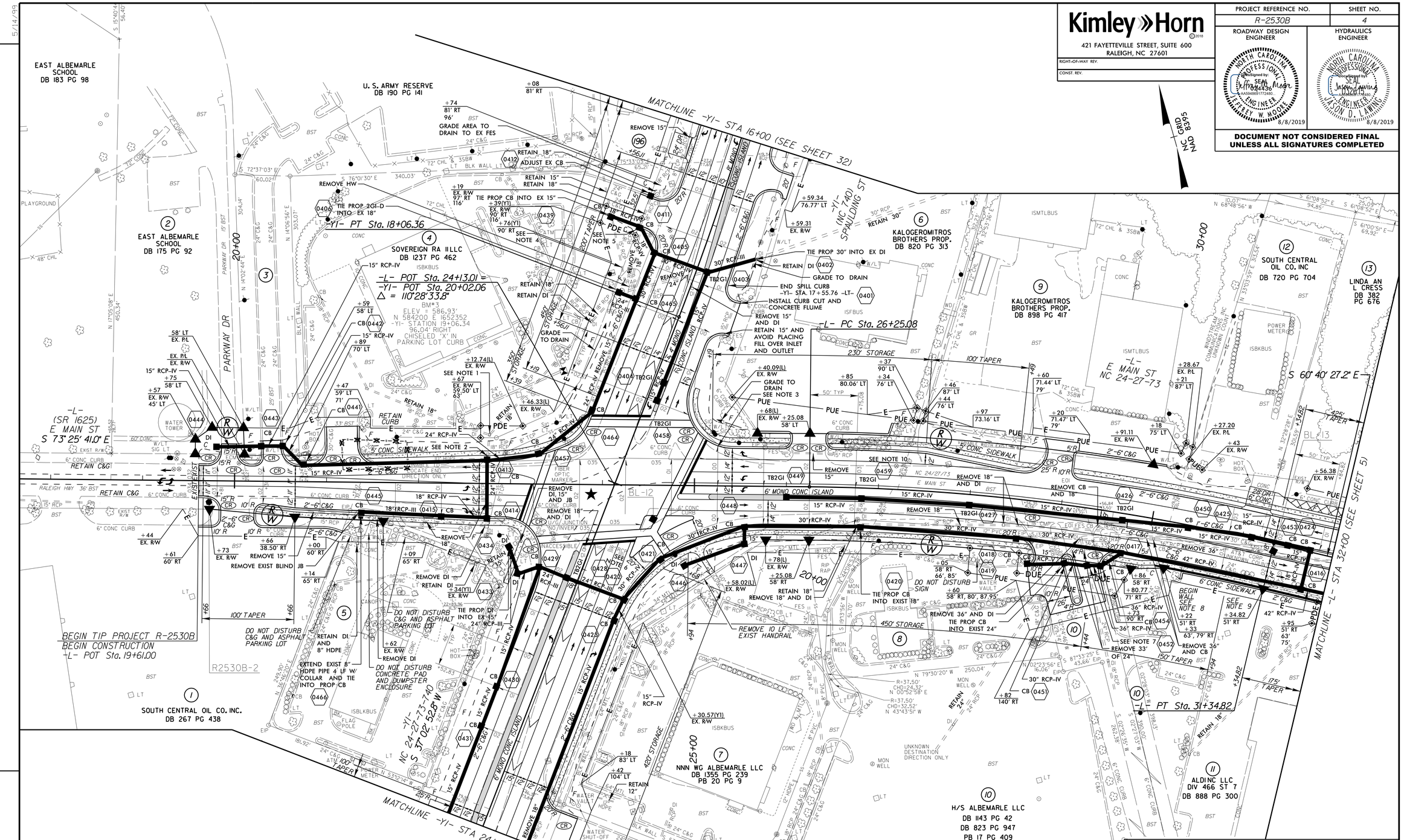

-L-
PI Sta 28+81.01
Δ = 12° 45' 13.8" (RT)
D = 2° 30' 07.2"
L = 509.75'
T = 255.93'
R = 2,290.00'
SE = 0.03
RO = 150'

-Y1-
PI Sta 12+09.99
Δ = 21° 39' 27.3" (RT)
D = 1° 47' 37.9"
L = 1,207.32'
T = 610.95'
R = 3,194.00'
SE = 0.03
RO = 138'

(3) OWNER UNKNOWN
DB UNKNOWN
PG UNKNOWN

(5) SOUTH CENTRAL OIL CO. INC.
DB 267 PG 438

(8) FIRST BANK INC
DB 1143 PG 46
PB 19 PG 218

(10) H/S ALBEMARLE LLC
DB 1143 PG 42
DB 823 PG 947
PB 17 PG 409

(196) EASTSIDE RENTALS, LLC
DB 1598 PG 175

(198) H/S ALBEMARLE LLC
DB 1143 PG 42
DB 823 PG 947
PB 17 PG 409

NOTES:
1. RETAIN DI AND PLUG 18" RCP
2. REMOVE JB, 10', AND 18"
3. BEGIN SPILL CURB -L- STA 25+25 (42' LT)
4. REMOVE 72 LF OF EXIST 15"
5. REMOVE CB AND TIE PROP CB INTO EXIST 18"
6. REMOVE 18"
7. TIE PROP TB JB W/ MH INTO EXIST 24"
8. BEGIN RETAINING WALL #1 -L- STA 30+12.00 (49.50' RT)
9. CONTRACTOR TO INSTALL PRECAST CONCRETE PARKING CURB 3' FROM FACE OF 2'-0" C&G FROM -L- STA 30+44 TO 32+16 (RT) SEE DETAIL SHEET 2C-13
10. REMOVE 10' HDPE

★ TRAFFIC SIGNAL

RADII DIMENSIONS ARE TO THE EDGE OF PAVEMENT UNLESS OTHERWISE NOTED (APPLIES TO ALL SHEETS)

ALL DRIVEWAY RADII ARE 10' UNLESS OTHERWISE NOTED (APPLIES TO ALL SHEETS)

SEE SHEET 2B-1 FOR INTERSECTION DETAILS
SEE SHEET 35 FOR -L- PROFILE
SEE SHEET 51 FOR -Y1- PROFILE
SEE SHEET W01-1 FOR RETAINING WALL PLAN

REVISIONS
5/14/99
8/8/2019

DocuSign Envelope ID: 04439179-298E-4344-8925-4261631A8E8C

5/14/99

REVISIONS

(13) LINDA AN L CRESS
DB 382 PG 676

(20) STANLY SQUARE INC.
DB 383 PG 886
PB 13 PG 60

(25) GUSTAVO G. VENEGAS
DB 1481 PG 34

(26) JAMES J NOLAN
DB 1058 PG 648
PB 02 PG 106

(28) CHARLES E. & NANCY T. BURRIS
DB 872 PG 643
PB 02 PG 106

(33) V F W POST 2908
DB 150 PG 66

NOTES:
1. END RETAINING WALL #1 -L- STA 32+35.00 (49.50' RT)
2. CONTRACTOR TO INSTALL PRECAST CONCRETE PARKING CURB 3' FROM FACE OF 2'-0" C&G FROM -L- STA 30+44 TO 32+16 (RT) SEE DETAIL SHEET 2C-13
3. TOE PROTECTION - EST 25 SY PSRM SEE DETAIL 5, SHEET 2D-1
4. SPECIAL LATERAL 'V' DITCH WITH 2:1 FRONT SLOPES TO LIMIT IMPACTS. SEE DETAIL 9, SHEET 2D-1
5. REMOVE CB AND 18"
6. GRADE AREA TO DRAIN OVER CURB FROM -L- STA 39+78 TO 40+94 (LT) & STA 41+46 TO 42+65 (LT) (SEE CROSS SECTIONS)
7. OUTLET PROTECTION - CLASS 'B' RIP RAP EST 2 TONS, EST 7 SY GFD
8. TEMPORARY SHORING (TYP) (SEE TRANSPORTATION MANAGEMENT PLANS)
9. DO NOT DISTURB EXISTING AREA LIGHTS
10. SEAL ABANDONDED WELL

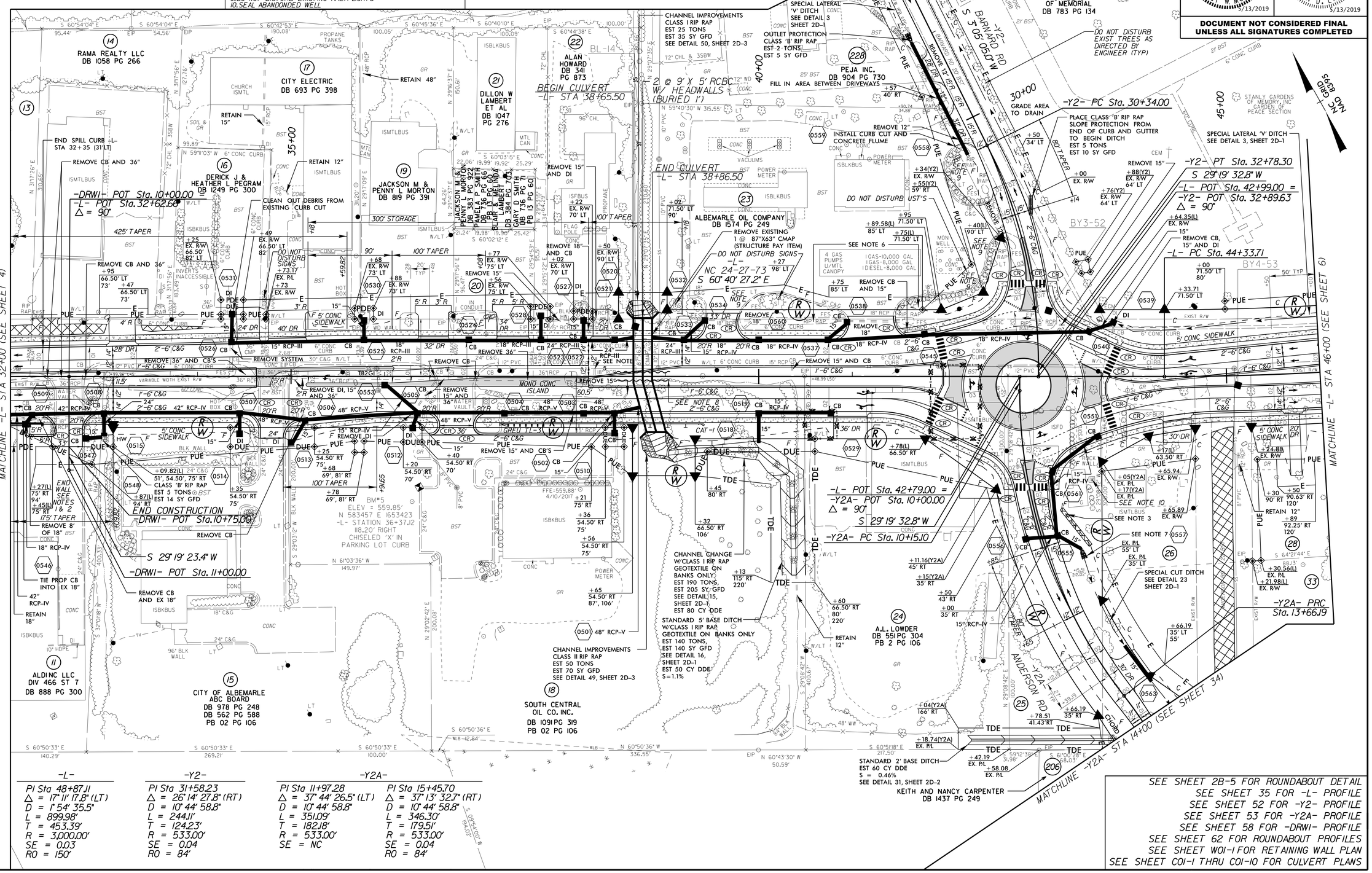

5/13/2019

Kimley»Horn ©2018
421 FAYETTEVILLE STREET, SUITE 600
RALEIGH, NC 27601
RIGHT-OF-WAY REV.
CONST. REV.

PROJECT REFERENCE NO.	SHEET NO.
R-2530B	5

ROADWAY DESIGN ENGINEER
NORTH CAROLINA PROFESSIONAL SEAL 024836 ENGINEER JEFFREY W. MOORE
DocuSign Envelope ID: 0C4E0A0A-0326-4B9D-A4A0-3A3AA6CA6AB2
5/13/2019

HYDRAULICS ENGINEER
NORTH CAROLINA PROFESSIONAL SEAL 0326 ENGINEER JASON D. LAWRENCE
DocuSign Envelope ID: 0C4E0A0A-0326-4B9D-A4A0-3A3AA6CA6AB2
5/13/2019

DOCUMENT NOT CONSIDERED FINAL UNLESS ALL SIGNATURES COMPLETED

SEE SHEET 2B-5 FOR ROUNDABOUT DETAIL
SEE SHEET 35 FOR -L- PROFILE
SEE SHEET 52 FOR -Y2- PROFILE
SEE SHEET 53 FOR -Y2A- PROFILE
SEE SHEET 58 FOR -DRWI- PROFILE
SEE SHEET 62 FOR ROUNDABOUT PROFILES
SEE SHEET W01-1 FOR RETAINING WALL PLAN
SEE SHEET C01-1 THRU C01-10 FOR CULVERT PLANS

DocuSign Envelope ID: 15785142-5A45-4616-96FB-FE42D40E6BE1

5/14/99

REVISIONS

12/6/2018

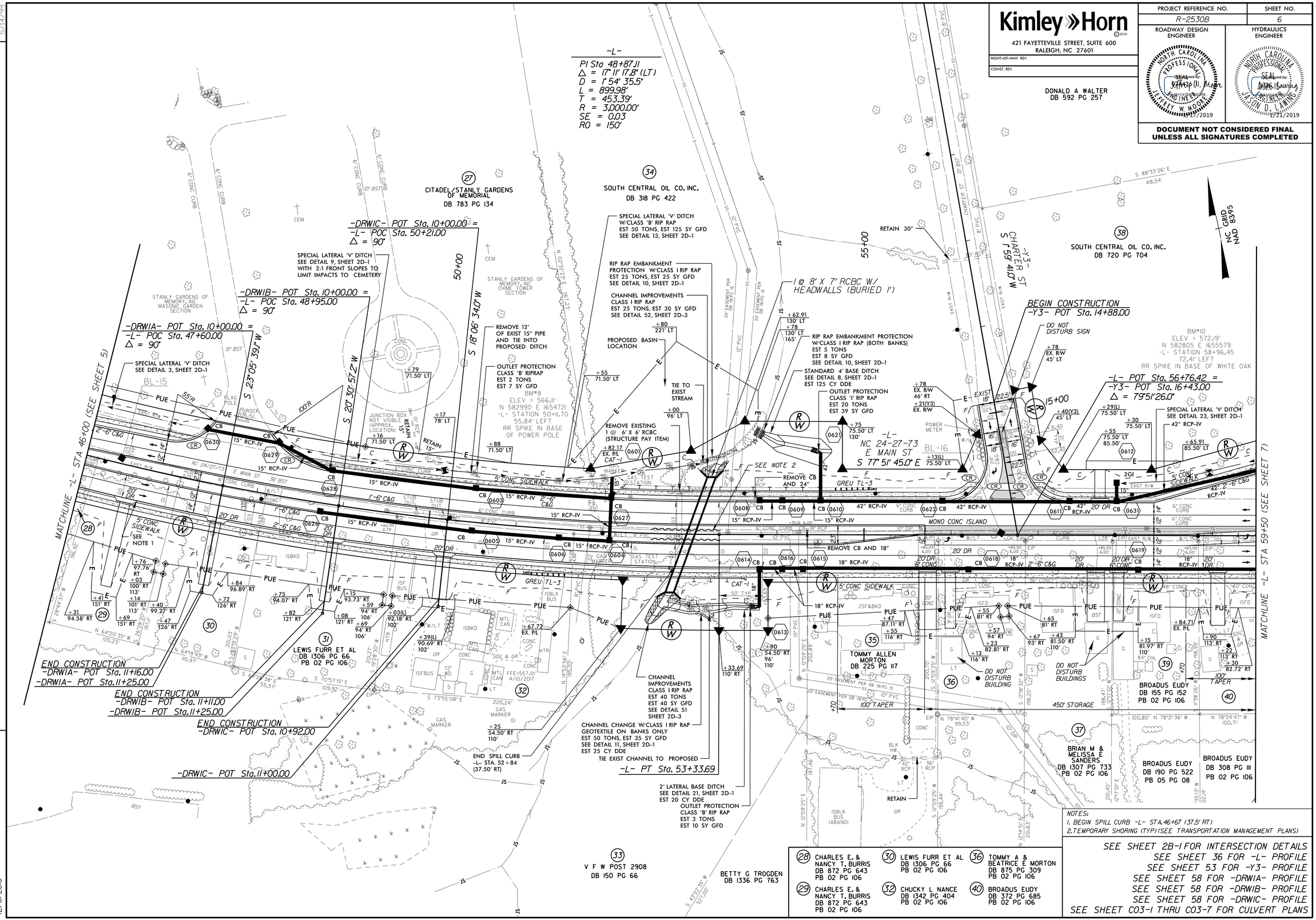

DocuSign Envelope ID: 52A9B354-E8FF-49DA-AB10-06CF7FBFD24

REVISIONS

5/14/99

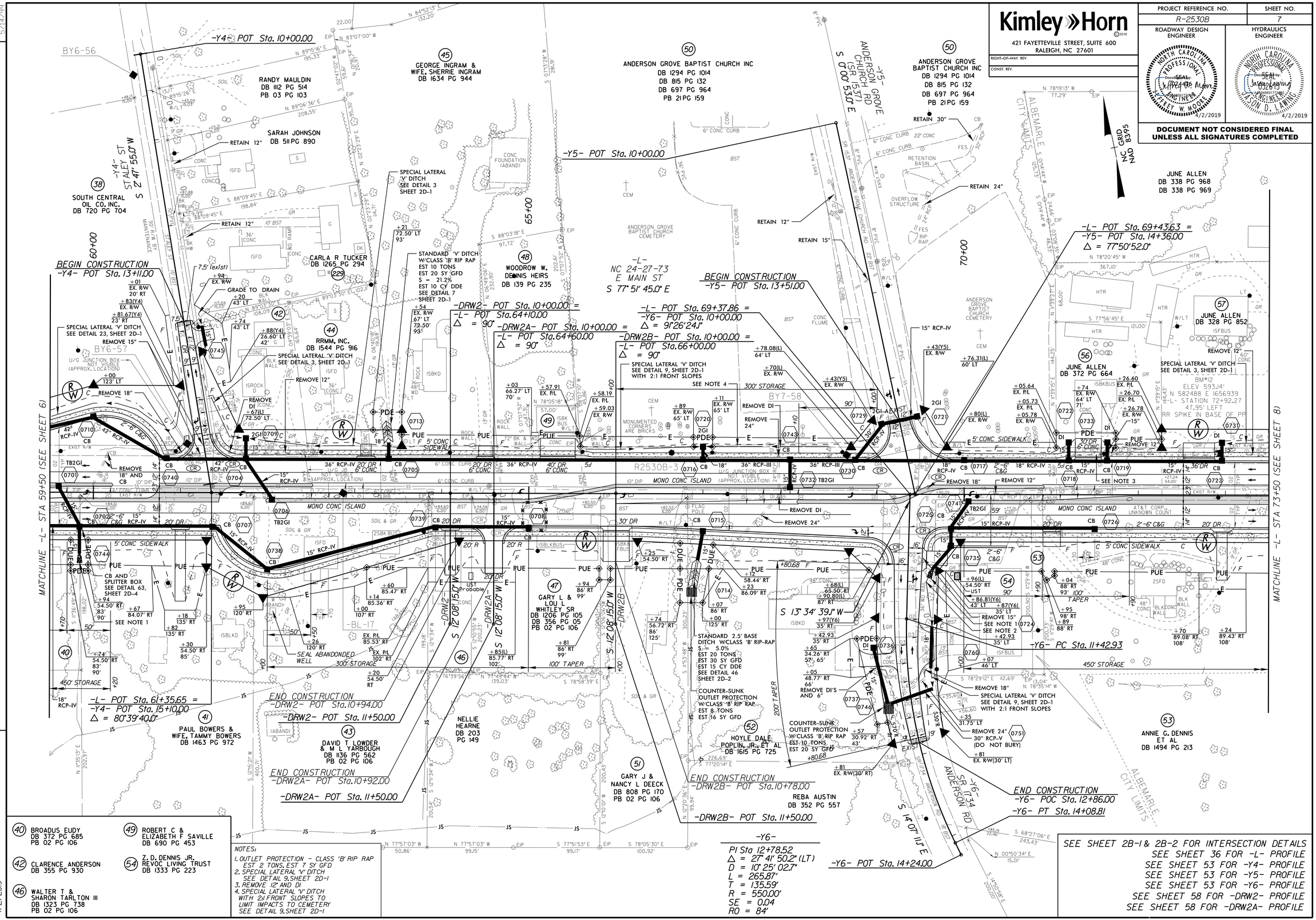

NOTES:

1. OUTLET PROTECTION - CLASS 'B' RIP RAP EST 2 TONS, EST 7 SY GFD
2. SPECIAL LATERAL 'V' DITCH SEE DETAIL 9, SHEET 2D-1
3. REMOVE 12" AND DI
4. SPECIAL LATERAL 'V' DITCH WITH 2:1 FRONT SLOPES TO LIMIT IMPACTS TO CEMETERY SEE DETAIL 9, SHEET 2D-1

Kimley»Horn ©2018
421 FAYETTEVILLE STREET, SUITE 600
RALEIGH, NC 27601

RIGHT-OF-WAY REV.
CONST. REV.

PROJECT REFERENCE NO.	SHEET NO.
R-2530B	7

ROADWAY DESIGN ENGINEER
NORTH CAROLINA PROFESSIONAL ENGINEER SEAL JEFFREY W. HOOPER
Docu Sign Envelope ID: 52A9B354-E8FF-49DA-AB10-06CF7FBFD24
4/2/2019

HYDRAULICS ENGINEER
NORTH CAROLINA PROFESSIONAL ENGINEER SEAL 032619 JASON D. LAWING
Docu Sign Envelope ID: 52A9B354-E8FF-49DA-AB10-06CF7FBFD24
4/2/2019

DOCUMENT NOT CONSIDERED FINAL UNLESS ALL SIGNATURES COMPLETED

4/2/2019

DocuSign Envelope ID: 15785142-5A45-4616-96FB-FE42D40E6BE1

5/14/99

REVISIONS

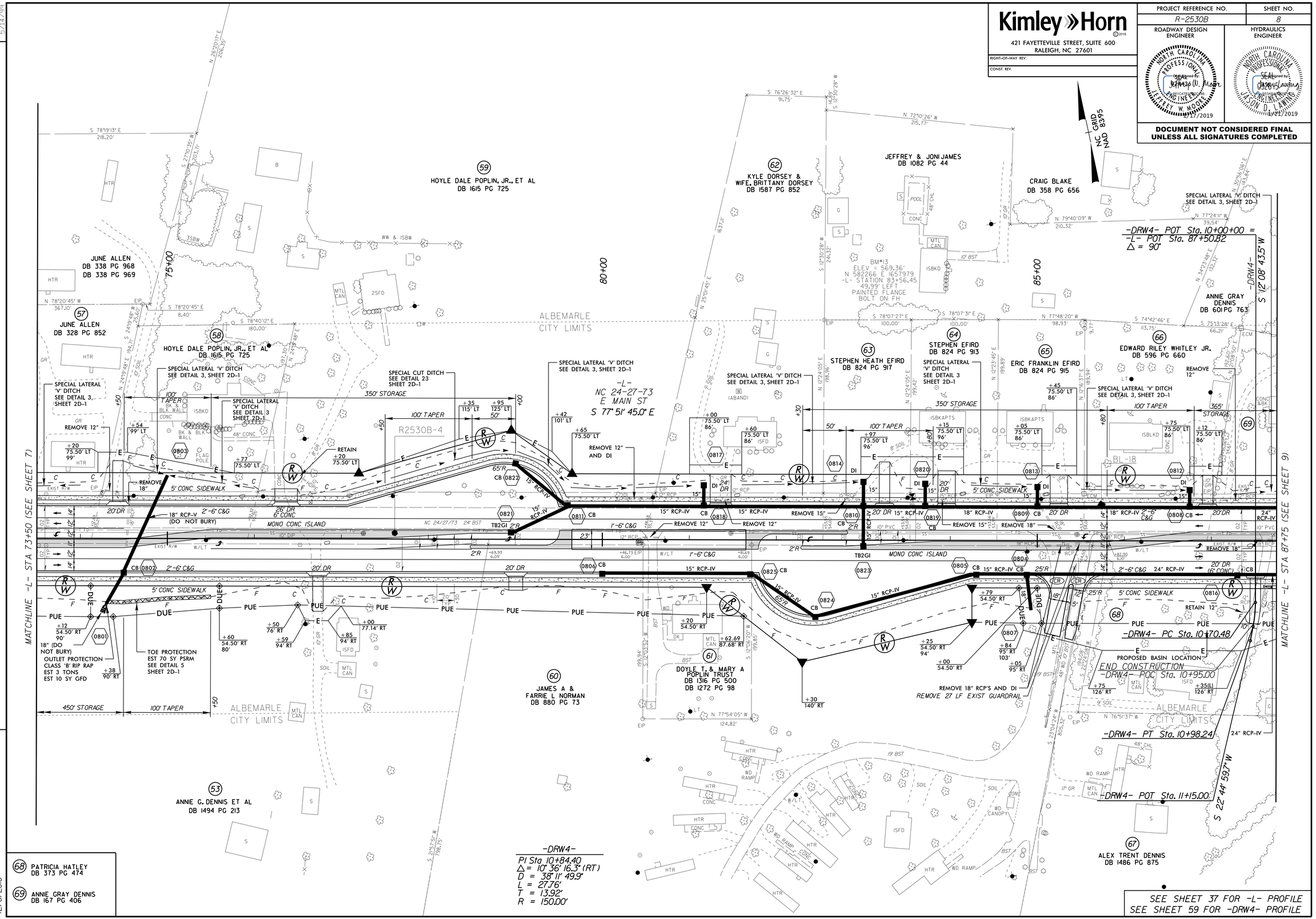

68 PATRICIA HATLEY DB 373 PG 474

69 ANNIE GRAY DENNIS DB 167 PG 406

12/6/2018

DocuSign Envelope ID: 15785142-5A45-4616-96FB-FE42D40E6BE1

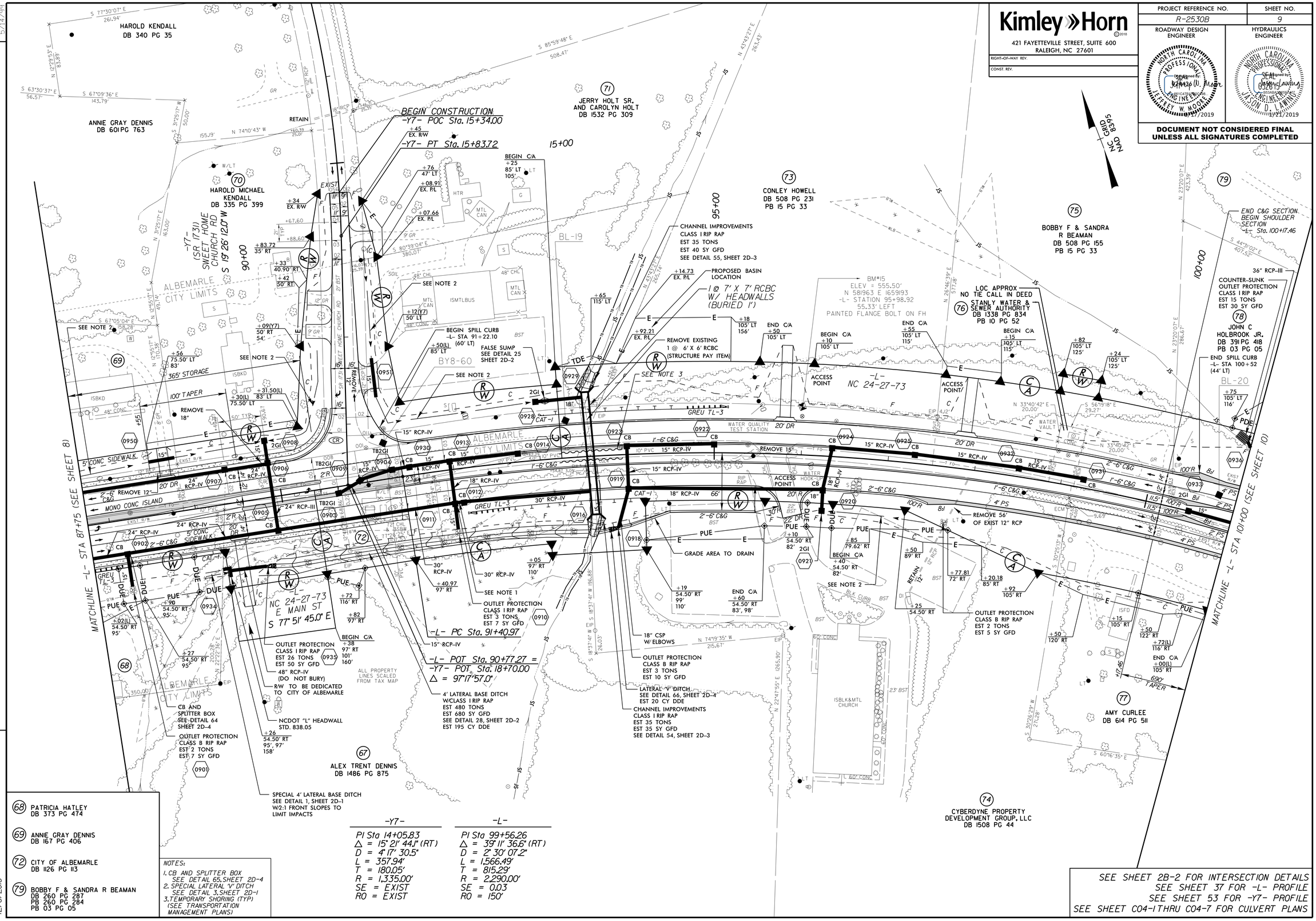

DocuSign Envelope ID: 5BE7E42C-EA68-4988-B7DE-86A5F21C3860

Kimley»Horn ©2018
421 FAYETTEVILLE STREET, SUITE 600
RALEIGH, NC 27601

RIGHT-OF-WAY REV.
CONST. REV.

PROJECT REFERENCE NO.	SHEET NO.
R-2530B	10

ROADWAY DESIGN ENGINEER
NORTH CAROLINA PROFESSIONAL SEAL 022456 ENGINEER JEFFREY W HOOPER
Docu Signed by: Jeffrey W Hooper
8/24/2019

HYDRAULICS ENGINEER
NORTH CAROLINA PROFESSIONAL SEAL 032615 ENGINEER JASON D. LAWING
Docu Signed by: Jason Lawing
8/24/2019

DOCUMENT NOT CONSIDERED FINAL UNLESS ALL SIGNATURES COMPLETED

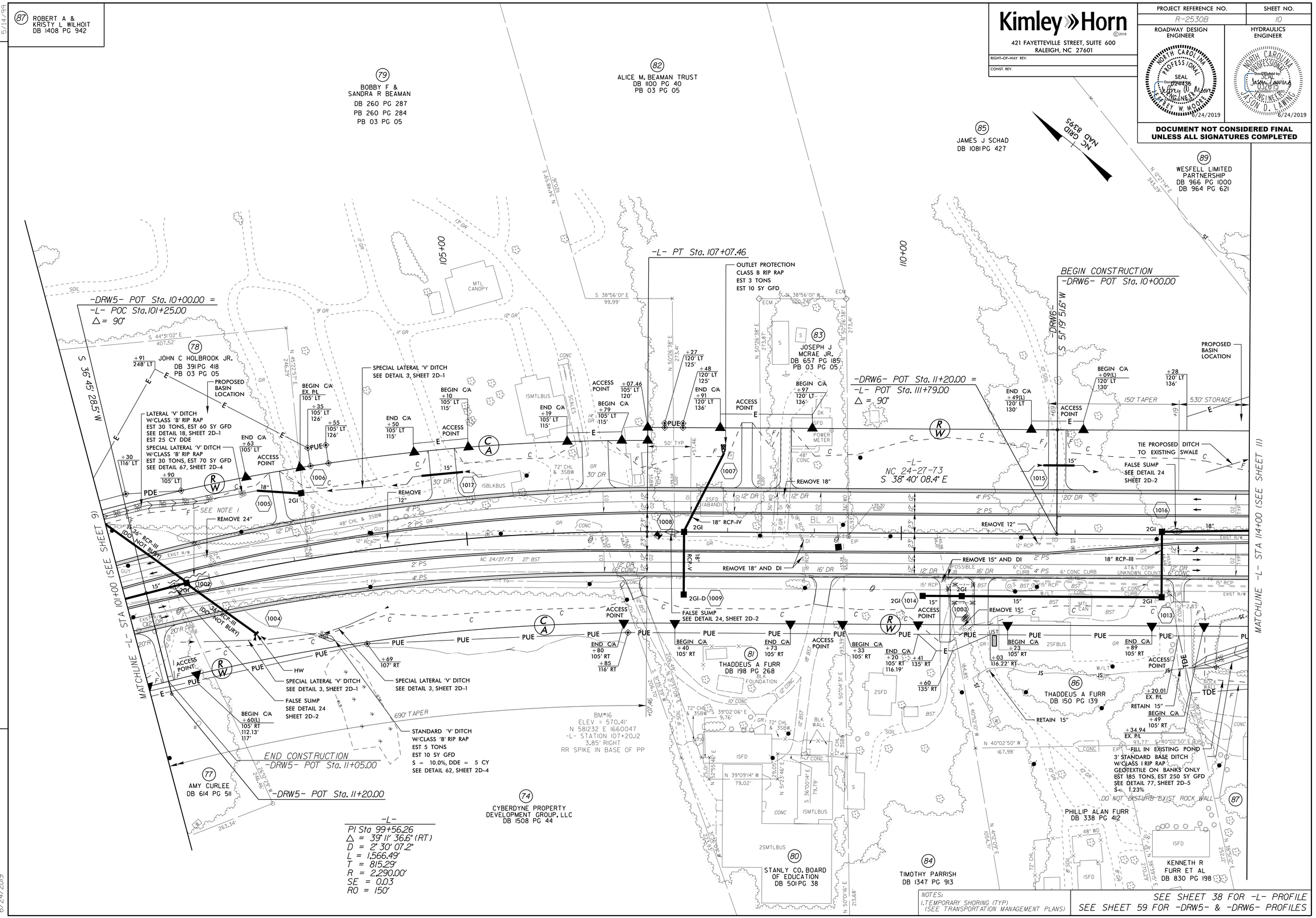

-L-
PI Sta 99+56.26
Δ = 39° 11' 36.6" (RT)
D = 2° 30' 07.2"
L = 1,566.49'
T = 815.29'
R = 2,290.00'
SE = 0.03
RO = 150'

NOTES:
1. TEMPORARY SHORING (TYP) (SEE TRANSPORTATION MANAGEMENT PLANS)

SEE SHEET 38 FOR -L- PROFILE
SEE SHEET 59 FOR -DRW5- & -DRW6- PROFILES

REVISIONS
5/14/99
6/24/2019

DocuSign Envelope ID: 15785142-5A45-4616-96FB-FE42D40E6BE1

5/14/99

REVISIONS

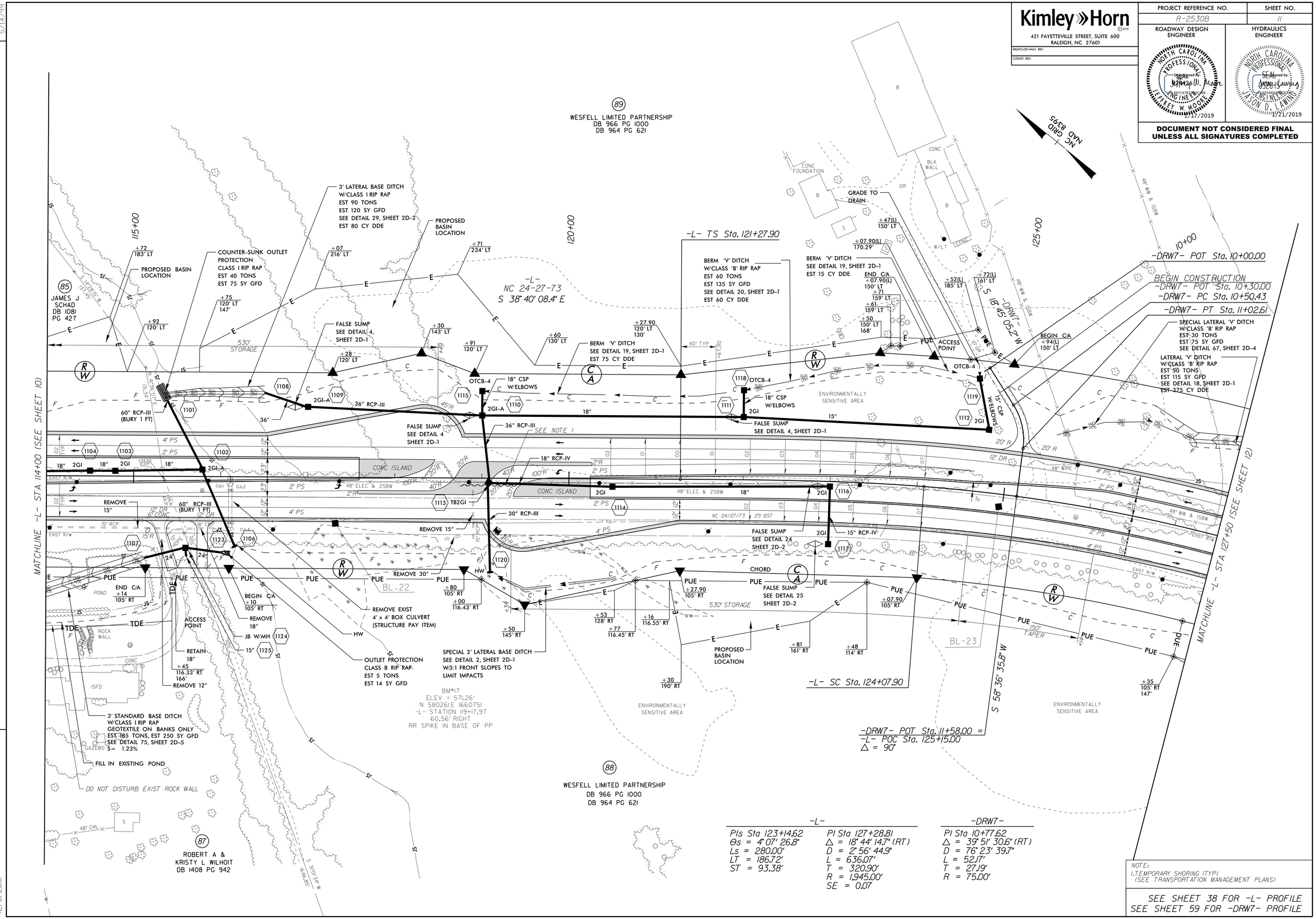

12/6/2018

DocuSign Envelope ID: 15785142-5A45-4616-96FB-FE42D40E6BE1

Kimley»Horn ©2018
421 FAYETTEVILLE STREET, SUITE 600
RALEIGH, NC 27601

RIGHT-OF-WAY REV.
CONST. REV.

PROJECT REFERENCE NO.	SHEET NO.
R-2530B	12

ROADWAY DESIGN ENGINEER — NORTH CAROLINA PROFESSIONAL SEAL ENGINEER JEFFREY W. HOOPER — Signed by Jeffrey W. Hooper — 1/17/2019

HYDRAULICS ENGINEER — NORTH CAROLINA PROFESSIONAL SEAL ENGINEER JASON D. LAWRENCE — Signed by Jason Lawrence — 1/21/2019

DOCUMENT NOT CONSIDERED FINAL UNLESS ALL SIGNATURES COMPLETED

REVISIONS 5/14/99

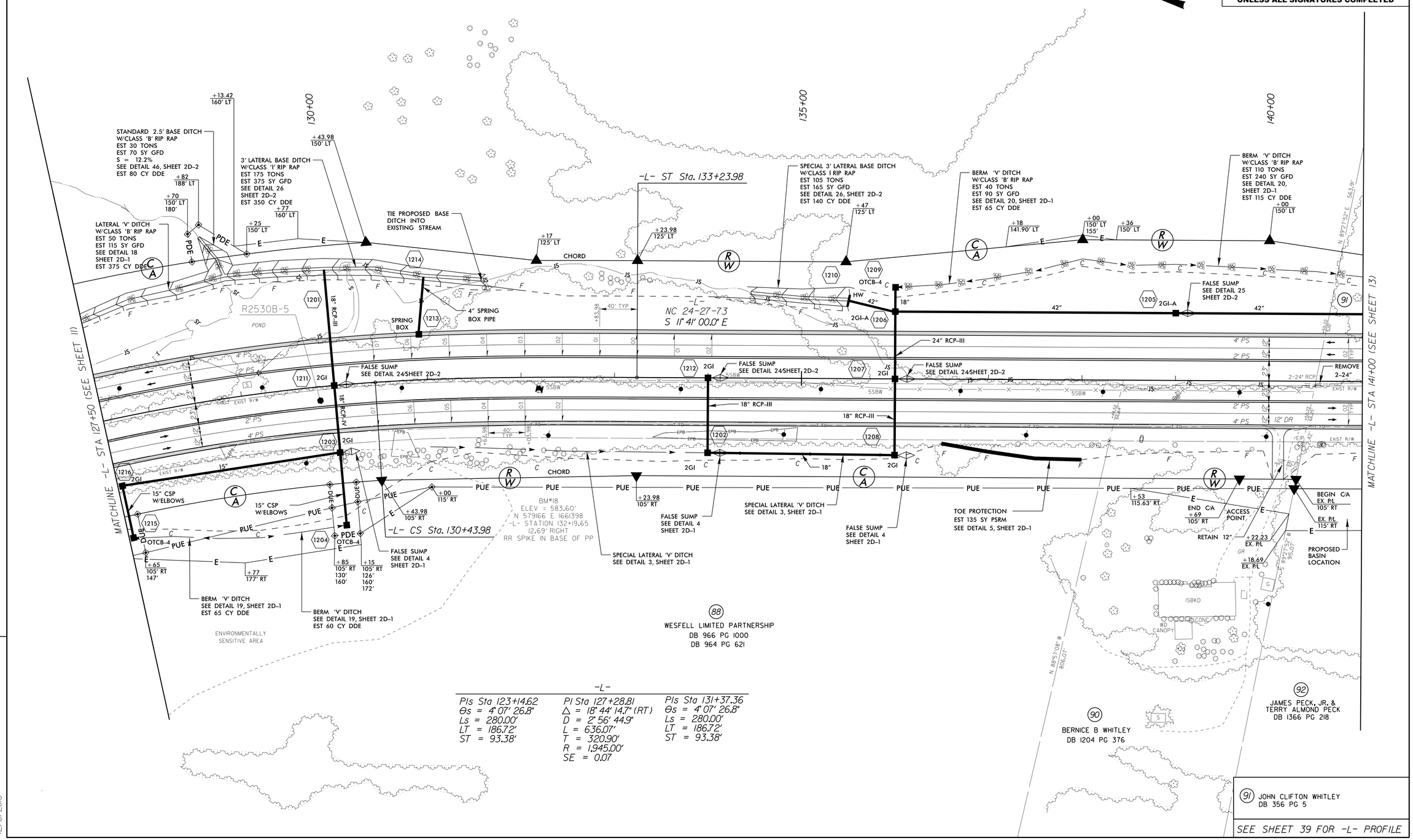

-L-

PIs Sta 123+14.62	PI Sta 127+28.81	PIs Sta 131+37.36
Θs = 4° 07' 26.8"	Δ = 18° 44' 14.7" (RT)	Θs = 4° 07' 26.8"
Ls = 280.00'	D = 2° 56' 44.9"	Ls = 280.00'
LT = 186.72'	L = 636.07'	LT = 186.72'
ST = 93.38'	T = 320.90'	ST = 93.38'
	R = 1,945.00'	
	SE = 0.07	

12/6/2018

DocuSign Envelope ID: 15785142-5A45-4616-96FB-FE42D40E6BE1

NOTES:
1. 2' LATERAL BASE DITCH SEE DETAIL 21, SHEET 2D-1 EST 75 CY DDE
2. OUTLET PROTECTION - CLASS B RIP RAP EST 2 TONS, EST 7 SY GFD
3. OUTLET PROTECTION - CLASS B RIP RAP EST 2 TONS, EST 7 SY GFD
4. SPECIAL LATERAL 'V' DITCH SEE DETAIL 3, SHEET 2D-1
5. REINFORCED SOIL SLOPES FROM -L- STA 147+15 TO 147+65 (LT)
6. TEMPORARY SHORING (TYP) (SEE TRANSPORTATION MANAGEMENT PLANS)
7. SHOP CURVED GUARDRAIL (R=25')

5/14/99

REVISIONS

(89) WESFELL LIMITED PARTNERSHIP
DB 966 PG 1000
DB 964 PG 621

(97) D & G PROPERTIES
DB 540 PG 878

(99) STONY GAP PROPERTIES LLC
DB 1370 PG 1000
DB 187 PG 245

D & G PROPERTIES
DB 520 PG 159

BM#20
ELEV = 532.87'
N 577567 E 1662371
-Y8- STATION 11+09.84
29.17' RIGHT
RR SPIKE IN BASE OF PP

JOHN J EARNHARDT JR.
DB 1365 PG 113

ROBERT D & MARY JANE JADLOCKI
DB 562 PG 1

(94) TJ VENTURES LLC
DB 1328 PG 408

(101) TJ VENTURES LLC
DB 1328 PG 405
PB 06 PG 148

(91) JOHN CLIFTON WHITLEY
DB 356 PG 5

(93) GUS SCHAD
DB 987 PG 240

(98) TJ VENTURES LLC
DB 1328 PG 405

(100) GUS SCHAD
DB 1026 PG 436

(92) JAMES PECK, JR. & TERRY ALMOND PECK
DB 1366 PG 218

(95) STONY GAP PROPERTIES LLC
DB 1370 PG 1000

(96) DR JOEL LEE MAULDIN SR. HEIRS
DB 68 PG 175

BEGIN CONSTRUCTION
-Y8- POT Sta. 13+68.00

-Y8- PT Sta. 14+44.34

-L- TS Sta. 154+34.90

-L- POT Sta. 153+07.95 =
-Y8- POT Sta. 18+05.16
Δ = 64°08'38.0"

-Y8- PC Sta. 18+71.83

-Y8- PRC Sta. 20+91.02

-Y8-

PI Sta 12+48.42	PI Sta 19+82.72	PI Sta 23+96.30
Δ = 1° 57' 33.9" (LT)	Δ = 21° 23' 41.2" (LT)	Δ = 4° 17' 24.9" (RT)
D = 0° 30' 00.0"	D = 9° 45' 38.8"	D = 0° 42' 10.9"
L = 391.88'	L = 219.19'	L = 610.26'
T = 195.96'	T = 110.89'	T = 305.27'
R = 11,459.16'	R = 587.00'	R = 8,150.00'
SE = NC	SE = 0.04	SE = NC
RO = NONE	RO = 96'	RO = NONE
	DS = 45 MPH	

MATCHLINE -L- STA 141+00 (SEE SHEET 12)

MATCHLINE -L- STA 155+25 (SEE SHEET 14)

MATCHLINE -Y8- STA 21+00 (SEE SHEET 34)

SEE SHEET 2B-2 FOR INTERSECTION DETAILS
SEE SHEET 39 FOR -L- PROFILE
SEE SHEET 54 FOR -Y8- PROFILE

12/6/2018

Kimley»Horn ©2018
421 FAYETTEVILLE STREET, SUITE 600
RALEIGH, NC 27601

RIGHT-OF-WAY REV.
CONST. REV.

PROJECT REFERENCE NO.	SHEET NO.
R-2530B	13

ROADWAY DESIGN ENGINEER
NORTH CAROLINA PROFESSIONAL ENGINEER SEAL 041164 JEFFREY W. HOOKER
Signature Not Required
2/17/2019

HYDRAULICS ENGINEER
NORTH CAROLINA PROFESSIONAL ENGINEER SEAL 032613 JASON D. LAWRENCE
Signature Not Required
10/21/2019

DOCUMENT NOT CONSIDERED FINAL UNLESS ALL SIGNATURES COMPLETED

DocuSign Envelope ID: 15785142-5A45-4616-96FB-FE42D40E6BE1

5/14/99

REVISIONS

-DRW9-
PI Sta 10+48.93
Δ = 13° 55' 05.7" (RT)
D = 22° 55' 05.9"
L = 60.73'
T = 30.52'
R = 250.00'

-L-
PIs Sta 155+94.92
Θs = 2° 57' 48.9"
Ls = 240.00'
LT = 160.02'
ST = 80.02'

PI Sta 163+10.12
Δ = 30° 37' 29.5" (LT)
D = 2° 28' 10.7"
L = 1,240.05'
T = 635.22'
R = 2,320.00'
SE = 0.06

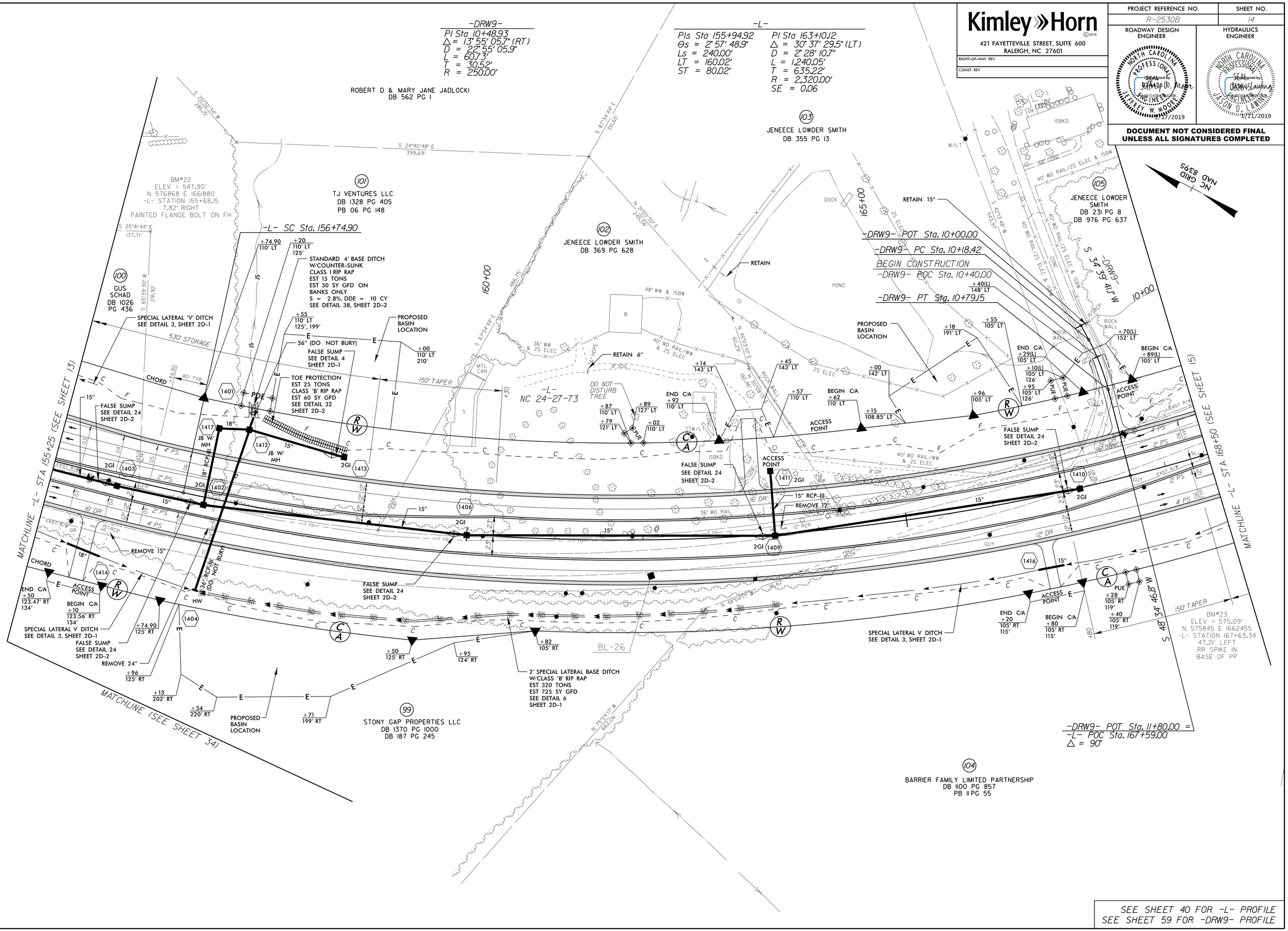

Kimley»Horn ©2018
421 FAYETTEVILLE STREET, SUITE 600
RALEIGH, NC 27601

RIGHT-OF-WAY REV.
CONST. REV.

PROJECT REFERENCE NO.	SHEET NO.
R-2530B	14

ROADWAY DESIGN ENGINEER
NORTH CAROLINA PROFESSIONAL SEAL ENGINEER JEFFREY W. HOOKER
Signature on file
11/7/2019

HYDRAULICS ENGINEER
NORTH CAROLINA PROFESSIONAL SEAL ENGINEER JASON D. LAWSON
Signature on file
11/21/2019

DOCUMENT NOT CONSIDERED FINAL UNLESS ALL SIGNATURES COMPLETED

12/6/2018