This electronic collection of documents is provided for the convenience of the user and is Not a Certified Document –

The documents contained herein were originally issued and sealed by the individuals whose names and license numbers appear on each page, on the dates appearing with their signature on that page.
This file or an individual page shall not be considered a certified document.

DocuSign Envelope ID: 35BF86D9-BE4A-4B2F-B03E-21E2B375220B

BM #2 RR SPIKE IN 24"PINE, STA. 74+28.00 -L-, 81.00' LT., EL. 87.35 (N 989026; E 2412995)

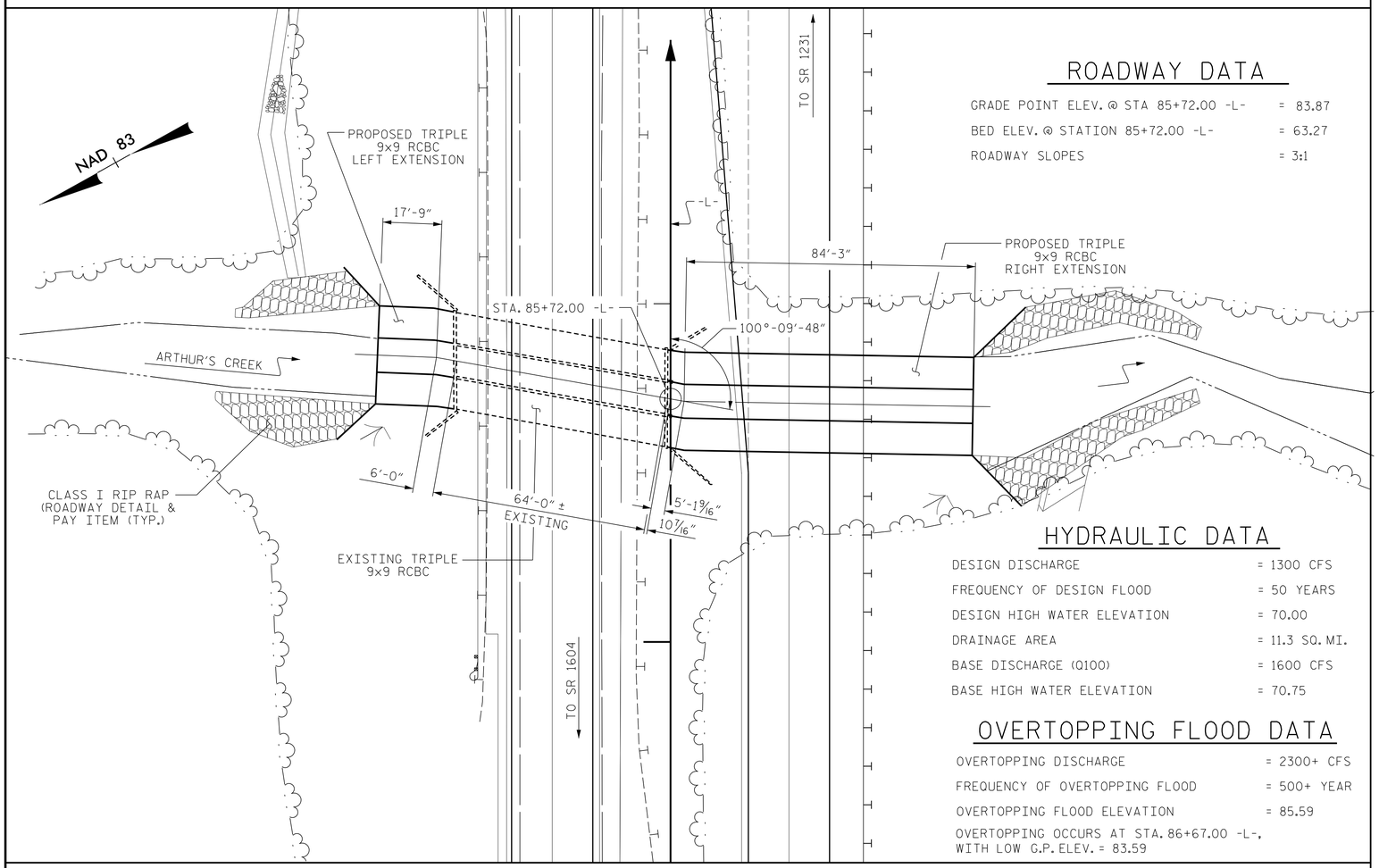

ROADWAY DATA

GRADE POINT ELEV. @ STA 85+72.00 -L-	= 83.87
BED ELEV. @ STATION 85+72.00 -L-	= 63.27
ROADWAY SLOPES	= 3:1

HYDRAULIC DATA

DESIGN DISCHARGE	= 1300 CFS
FREQUENCY OF DESIGN FLOOD	= 50 YEARS
DESIGN HIGH WATER ELEVATION	= 70.00
DRAINAGE AREA	= 11.3 SQ. MI.
BASE DISCHARGE (Q100)	= 1600 CFS
BASE HIGH WATER ELEVATION	= 70.75

OVERTOPPING FLOOD DATA

OVERTOPPING DISCHARGE	= 2300+ CFS
FREQUENCY OF OVERTOPPING FLOOD	= 500+ YEAR
OVERTOPPING FLOOD ELEVATION	= 85.59

OVERTOPPING OCCURS AT STA. 86+67.00 -L-, WITH LOW G.P. ELEV. = 83.59

LOCATION SKETCH

FOR UTILITY INFORMATION, SEE UTILITY PLANS AND SPECIAL PROVISIONS.

NOTES

ASSUMED LIVE LOAD ----------HL-93 OR ALTERNATE LOADING.

DESIGN FILL TO
BOTT. OF TOP SLAB-------- 11.80 FT. MAX., 8.58 FT. MIN.

FOR OTHER DESIGN DATA AND NOTES SEE STANDARD NOTE SHEET.

3"Ø WEEP HOLES INDICATED TO BE IN ACCORDANCE WITH THE SPECIFICATIONS.

CONCRETE IN CULVERTS TO BE POURED IN THE FOLLOWING ORDER:

STAGE I

1. WING FOOTINGS AND FLOOR SLAB INCLUDING 4" OF VERTICAL WALLS.
2. THE REMAINING PORTIONS OF THE WALLS AND WINGS FULL HEIGHT.

STAGE II

1. WING FOOTINGS AND FLOOR SLAB INCLUDING 4" OF VERTICAL WALLS.
2. THE REMAINING PORTIONS OF THE WALLS AND WINGS FULL HEIGHT FOLLOWED BY ROOF SLAB AND HEADWALLS.

THE RESIDENT ENGINEER SHALL CHECK THE LENGTH OF CULVERT BEFORE STAKING IT OUT TO MAKE CERTAIN THAT IT WILL PROPERLY TAKE CARE OF THE FILL.

DIMENSIONS FOR WING LAYOUT AS WELL ADDITIONAL REINFORCING STEEL EMBEDDED IN BARREL ARE SHOWN ON WING SHEET.

TRANSVERSE CONSTRUCTION JOINTS SHALL BE USED IN THE BARREL, SPACED TO LIMIT THE POURS TO A MAXIMUM OF 70 FT. LOCATION OF JOINTS SHALL BE SUBJECT TO APPROVAL OF THE ENGINEER.

AT THE CONTRACTOR'S OPTION, HE MAY SPLICE THE VERTICAL REINFORCING STEEL IN THE INTERIOR FACE OF EXTERIOR WALL AND BOTH FACES OF INTERIOR WALLS ABOVE LOWER WALL CONSTRUCTION JOINT. THE SPLICE LENGTH SHALL BE AS PROVIDED IN THE SPLICE LENGTH CHART SHOWN ON THE PLANS. EXTRA WEIGHT OF STEEL DUE TO THE SPLICES SHALL BE PAID FOR BY THE CONTRACTOR.

THE EXISTING STRUCTURE CONSISTING OF A 3 @ 9'x9' REINFORCED CONCRETE BOX CULVERT 64' LONG SHALL BE RETAINED AND EXTENDED. THE EXISTING CULVERT IS PRESENTLY NOT POSTED FOR LOAD LIMIT.

FOR CULVERT DIVERSIONS DETAILS AND PAY ITEM, SEE EROSION CONTROL PLANS.

A 3 FOOT STRIP OF FILTER FABRIC SHALL BE ATTACHED TO THE FILL FACE OF THE WING COVERING THE ENTIRE LENGHT OF EXPANSION JOINT.

FOR SUBMITTAL OF WORKING DRAWINGS, SEE SPECIAL PROVISIONS.

FOR FALSEWORK AND FORMWORK, SEE SPECIAL PROVISIONS.

FOR CRANE SAFETY, SEE SPECIAL PROVISIONS.

FOR GROUT FOR STRUCTURES, SEE SPECIAL PROVISIONS.

NO PRECAST REINFORCED BOX CULVERT OPTION WILL BE ALLOWED.

IF APPROVED BY THE ENGINEER, THE CONTRACTOR MAY USE THE EXISTING WINGS AS TEMPORARY SHORING FOR THE CONSTRUCTION OF THE CULVERT EXTENSIONS. IN THIS CASE, THE BOTTOM SLAB OF THE EXTENSION SHALL BE POURED AT LEAST 72 HOURS PRIOR TO CUTTING THE WINGS. THE WINGS MAY BE CUT EARLIER PROVIDED THE SLAB CONCRETE STRENGTH HAS REACHED A MINIMUM COMPRESSIVE STRENGTH OF 1500 PSI.

DOWELS SHALL BE USED TO CONNECT THE CULVERT EXTENSION TO THE EXISTING CULVERT AS SHOWN. FOR NOTE REGARDING SETTING OF DOWELS, SEE SHEET 5N.

FOR LIMITS OF TEMPORARY SHORING FOR MAINTENANCE OF TRAFFIC, SEE TRAFFIC CONTROL PLANS, FOR PAY ITEM FOR TEMPORARY SHORING FOR MAINTENANCE OF TRAFFIC, SEE ROADWAY PLANS.

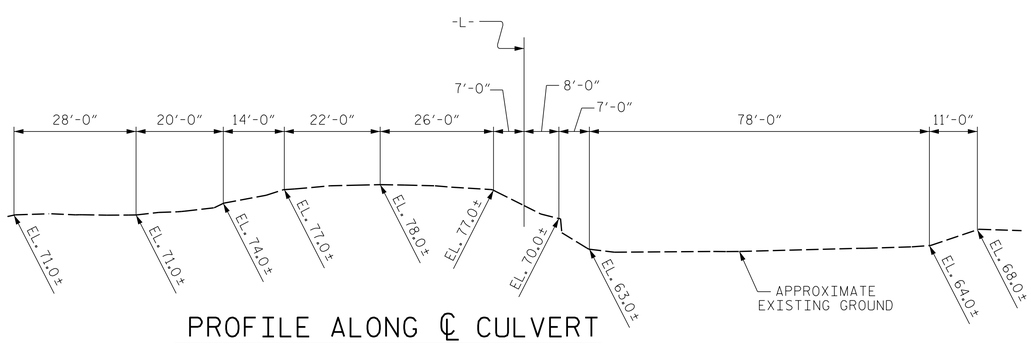

PROFILE ALONG ℄ CULVERT

TOTAL BILL OF MATERIAL

MATERIAL	ELEMENT	STAGE I LEFT EXT.	STAGE I RIGHT EXT.	STAGE II LEFT EXT.	STAGE II RIGHT EXT.
CLASS A CONCRETE (CU. YDS.)	BARREL	34.5	130.9	40.7	154.9
	HEADWALLS	----	----	1.4	1.4
	CURTAIN WALLS	1.2	1.7	0.4	0.6
	EDGE BEAMS	0.8	0.8	1.5	1.5
	WINGS	10.2	10.8	10.2	10.8
	TOTAL	46.7	144.2	54.2	169.2
			TOTAL	414.3	
REINFORCING STEEL (LBS.)	BARREL	5,712	19,627	6,162	21,492
	WINGS	653	653	653	652
	TOTAL	6,365	20,280	6,815	22,144
			TOTAL	56,560	
FOUNDATION COND. MAT'L (TONS)	———	35	135	15	55
			TOTAL	240	
CULVERT EXCAVATION			LUMP SUM		

PROJECT NO. R-2582A
NORTHAMPTON COUNTY
STATION: 85+72.00 -L-

SHEET 1 OF 10 CULVERT No. 650031

ENGINEER OF RECORD:
Developed by: Buck Charles Hunt
NORTH CAROLINA PROFESSIONAL SEAL 14091 ENGINEER BUCK CHARLES HUNT
9/25/2018

WETHERILL ENGINEERING
1223 Jones Franklin Rd.
Raleigh, N.C. 27606
Bus: 919 851 8077
Fax: 919 851 8107
LICENSE NO. F-0377

STATE OF NORTH CAROLINA
DEPARTMENT OF TRANSPORTATION
RALEIGH

BARREL STANDARD
TRIPLE 9 FT. X 9 FT.
CONCRETE BOX CULVERT

AUGUST 1989

REVISIONS						SHEET NO.
NO.	BY:	DATE:	NO.	BY:	DATE:	C1-1
1			3			TOTAL SHEETS
2			4			10

ASSEMBLED BY : D. HODGE DATE : 6/18		SPECIAL
CHECKED BY : B.C. HUNT DATE : 8/18		
DRAWN BY : R.W.WRIGHT DATE : OCT. 1989		STANDARD
CHECKED BY : A.R.BISSETTE DATE : OCT. 1989		

DOCUMENT NOT CONSIDERED FINAL UNLESS ALL SIGNATURES COMPLETED

P:\2018\181270\2_R-2582A\Structures\Site 4\DGN\R2582A_SMU_CU_650031.dgn
9/25/2018 11:22:33 AM ADDED 11-1-90

DocuSign Envelope ID: 35BF86D9-BE4A-4B2F-B03E-21E2B375220B

LOAD AND RESISTANCE FACTOR RATING (LRFR) SUMMARY FOR REINFORCED CONCRETE BOX CULVERTS

LEVEL		VEHICLE	WEIGHT (W) (TONS)	CONTROLLING LOAD RATING (#)	MINIMUM RATING FACTORS (RF)	TONS = W × RF	STRENGTH I LIMIT STATE									COMMENT NUMBER
							LIVE-LOAD FACTORS (γ_{LL})	MOMENT				SHEAR				
								RATING FACTOR	BOX NO.	ELEMENT TYPE	DISTANCE FROM LEFT END OF ELEMENT (ft)	RATING FACTOR	BOX NO.	ELEMENT TYPE	DISTANCE FROM LEFT END OF ELEMENT (ft)	
DESIGN LOAD RATING		HL-93 (INVENTORY)	N/A	1	1.34	--	1.75	1.50	1	BOTTOM SLAB	8.67	1.34	1	BOTTOM SLAB	8.03	
		HL-93 (OPERATING)	N/A		1.74	--	1.35	1.95	1	BOTTOM SLAB	8.67	1.74	1	BOTTOM SLAB	8.03	
		HS-20 (INVENTORY)	36.000	2	1.77	63.72	1.75	1.98	1	BOTTOM SLAB	8.67	1.77	1	BOTTOM SLAB	8.03	
		HS-20 (OPERATING)	36.000		2.29	82.44	1.35	2.57	1	BOTTOM SLAB	8.67	2.29	1	BOTTOM SLAB	8.03	
LEGAL LOAD RATING	SINGLE VEHICLE (SV)	SNSH	13.500		2.50	33.75	1.40	4.41	1	TOP SLAB	4.22	2.50	1	EXTERIOR WALL	8.50	
		SNGARBS2	20.000		2.50	50.00	1.40	3.88	1	BOTTOM SLAB	10.33	2.50	1	EXTERIOR WALL	8.50	
		SNAGRIS2	22.000		2.51	55.22	1.40	3.57	1	BOTTOM SLAB	8.67	2.51	1	EXTERIOR WALL	8.50	
		SNCOTTS3	27.250		2.18	59.41	1.40	2.27	1	TOP SLAB	8.67	2.18	1	TOP SLAB	8.03	
		SNAGGRS4	34.925		1.86	64.96	1.40	2.18	2	TOP SLAB	9.42	1.86	1	TOP SLAB	8.03	
		SNS5A	35.550		1.91	67.90	1.40	2.25	1	TOP SLAB	8.67	1.91	1	TOP SLAB	8.03	
		SNS6A	39.950		1.80	71.91	1.40	2.00	1	TOP SLAB	8.67	1.80	1	TOP SLAB	8.03	
		SNS7B	42.000		1.76	73.92	1.40	1.95	1	TOP SLAB	8.67	1.76	1	TOP SLAB	8.03	
	TRUCK TRACTOR SEMI-TRAILER (TTST)	TNAGRIT3	33.000		2.11	69.63	1.40	2.48	1	BOTTOM SLAB	8.67	2.11	1	TOP SLAB	8.03	
		TNT4A	33.075		2.11	69.79	1.40	2.37	1	TOP SLAB	8.67	2.11	1	TOP SLAB	8.03	
		TNT6A	41.600		2.01	83.62	1.40	2.10	1	TOP SLAB	8.67	2.01	1	TOP SLAB	8.03	
		TNT7A	42.000		1.94	81.48	1.40	2.11	1	BOTTOM SLAB	8.67	1.94	1	BOTTOM SLAB	8.03	
		TNT7B	42.000		1.91	80.22	1.40	2.20	1	BOTTOM SLAB	8.67	1.91	1	TOP SLAB	8.03	
		TNAGRIT4	43.000		1.75	75.25	1.40	2.04	1	TOP SLAB	8.67	1.75	1	TOP SLAB	8.03	
		TNAGT5A	45.000		1.84	82.80	1.40	2.04	1	TOP SLAB	8.67	1.84	1	TOP SLAB	8.03	
		TNAGT5B	45.000	3	1.59	71.55	1.40	1.81	1	TOP SLAB	8.67	1.59	1	TOP SLAB	8.03	

LOAD FACTORS:

DESIGN LOAD RATING FACTORS

LOAD TYPE	MAX FACTOR	MIN FACTOR
DC	1.25	0.90
DW	1.50	0.65
EV	1.30	0.90
EH	1.35	0.90
ES	1.35	0.90
LS	1.75	--
WA	1.00	--

NOTE:

RATING FACTORS ARE BASED ON THE STRENGTH I LIMIT STATE.

COMMENTS:

1.
2.
3.
4.

(#) CONTROLLING LOAD RATING

(1) DESIGN LOAD RATING (HL-93)

(2) DESIGN LOAD RATING (HS-20)

(3) LEGAL LOAD RATING **

** SEE CHART FOR VEHICLE TYPE

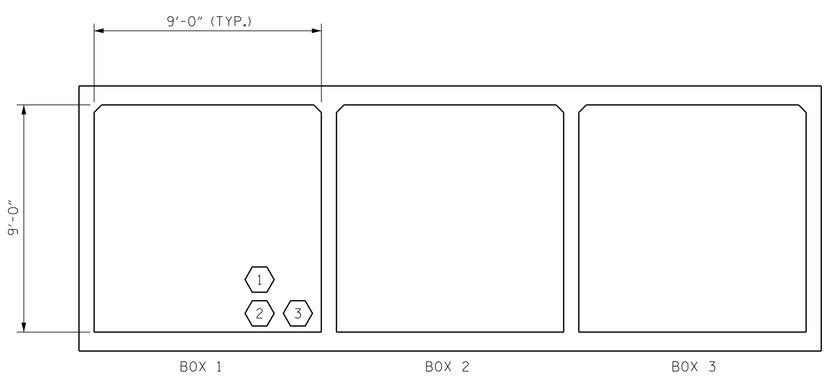

LRFR SUMMARY

(LOOKING DOWNSTREAM)

PROJECT NO. R-2582A

NORTHAMPTON COUNTY

STATION: 85+72.00 -L-

SHEET 2 OF 10

ENGINEER OF RECORD:

Docu Signed by: Buck Charles Hunt

NORTH CAROLINA PROFESSIONAL SEAL 14091 ENGINEER BUCK CHARLES HUNT

9/25/2018

WETHERILL ENGINEERING

1223 Jones Franklin Rd.
Raleigh, N.C. 27606
Bus: 919 851 8077
Fax: 919 851 8107
LICENSE NO. F-0377

DOCUMENT NOT CONSIDERED FINAL UNLESS ALL SIGNATURES COMPLETED

STATE OF NORTH CAROLINA
DEPARTMENT OF TRANSPORTATION
RALEIGH

STANDARD

LRFR SUMMARY FOR REINFORCED CONCRETE BOX CULVERTS
(NON-INTERSTATE TRAFFIC)

REVISIONS						SHEET NO.
NO.	BY:	DATE:	NO.	BY:	DATE:	C1-2
1			3			TOTAL SHEETS
2			4			10

STD. NO. LRFR5

ASSEMBLED BY : D. HODGE DATE : 7/18
CHECKED BY : B.C. HUNT DATE : 8/18

DRAWN BY : WMC 7/11 REV. 10/1/11 MAA/GM
CHECKED BY : GM 7/11 REV. 12/17 MAA/THC

9/25/2018
11:23:05 AM
P:\2018\18127.02 R-2582A\Structures\Site 4\DGN\R2582A_SMU_ CU_650031.dgn

P:\2018\18127.02 R-2582A\Structures\Site 4\DGN\R2582A_SMU_ CU_650031.dgn
9/25/2018 11:23:05 AM

DocuSign Envelope ID: 35BF86D9-BE4A-4B2F-B03E-21E2B375220B

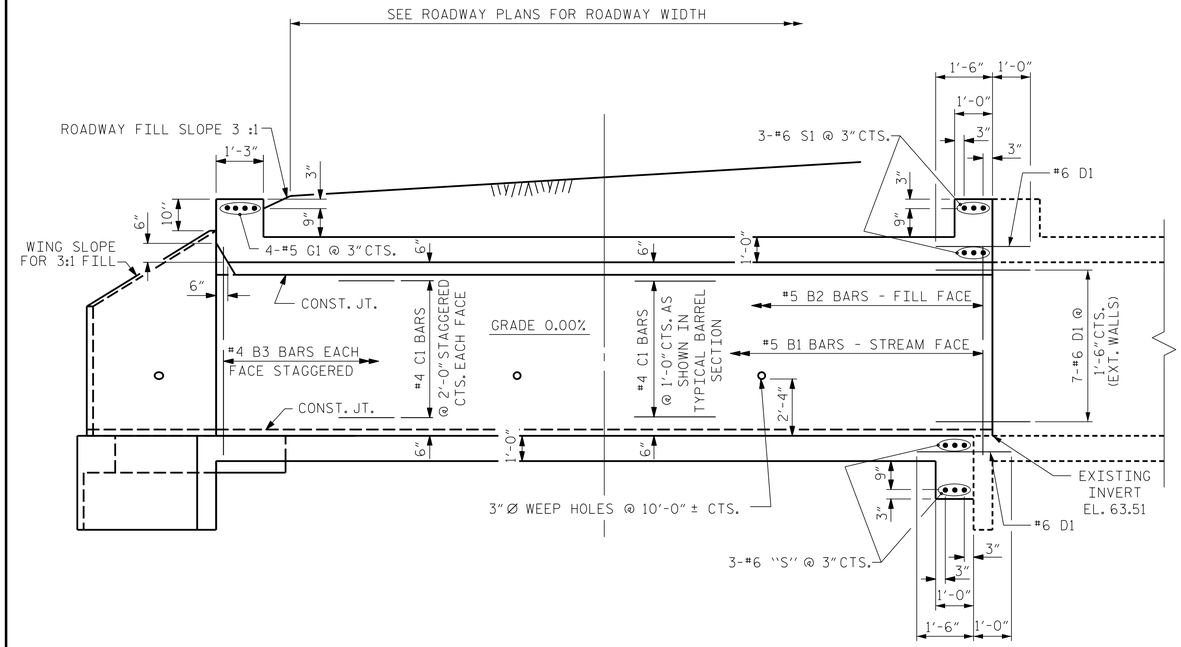

CULVERT SECTION NORMAL TO ROADWAY

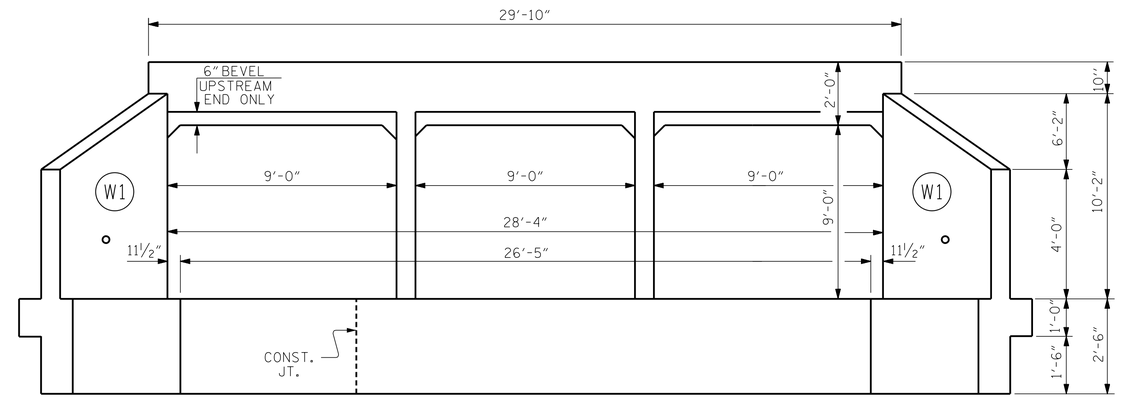

END ELEVATION

(LOOKING DOWNSTREAM)

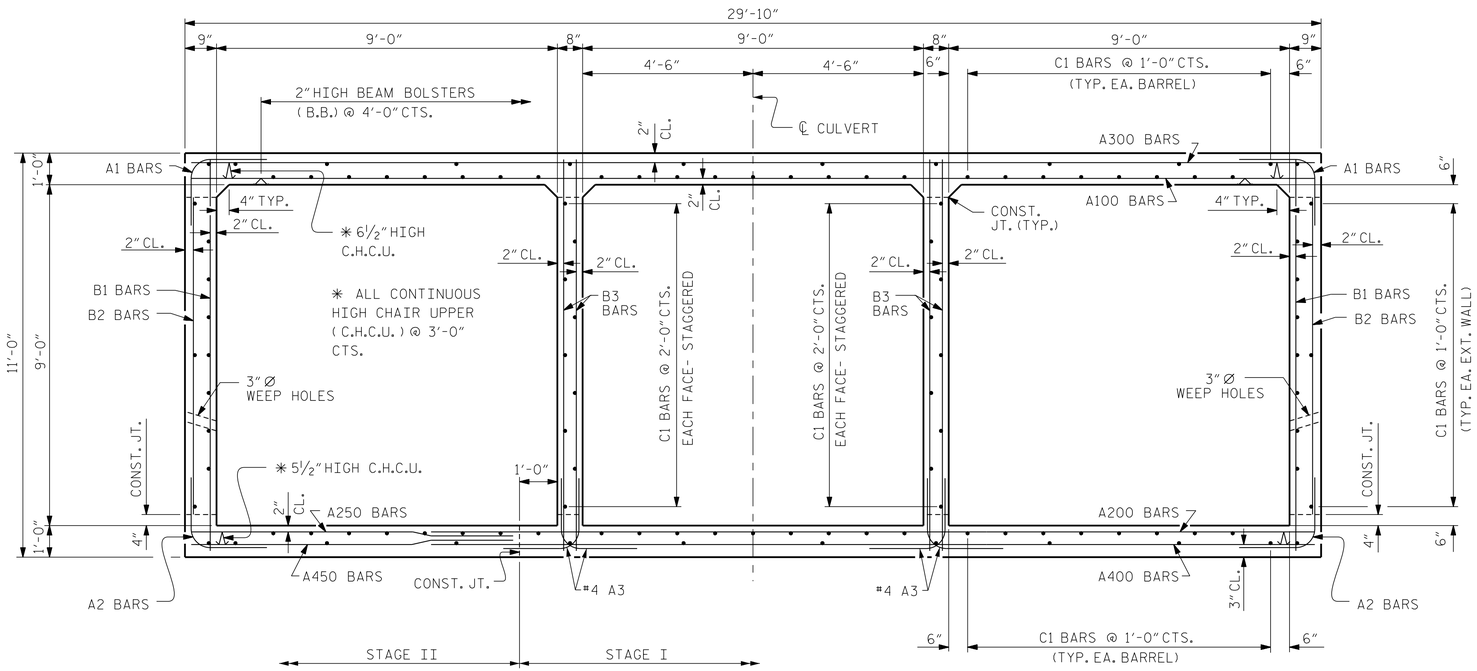

RIGHT ANGLE SECTION OF BARREL LOOKING DOWNSTREAM

THERE ARE 112 "C" BARS IN SECTION OF BARREL.

PROJECT NO. R-2582A

NORTHAMPTON COUNTY

STATION: 85+72.00 -L-

SHEET 3 OF 10

ENGINEER OF RECORD:

Buck Charles Hunt

NORTH CAROLINA PROFESSIONAL SEAL 14091 ENGINEER BUCK CHARLES HUNT

9/25/2018

WETHERILL ENGINEERING

1223 Jones Franklin Rd.
Raleigh, N.C. 27606
Bus: 919 851 8077
Fax: 919 851 8107
LICENSE NO. F-0377

STATE OF NORTH CAROLINA
DEPARTMENT OF TRANSPORTATION
RALEIGH

TRIPLE 9 FT. X 9 FT. CONCRETE BOX CULVERT (LEFT EXTENSION)

REVISIONS						SHEET NO.
NO.	BY:	DATE:	NO.	BY:	DATE:	C1-3
1			3			TOTAL SHEETS
2			4			10

DRAWN BY : D. HODGE DATE : 7/18

CHECKED BY : B.C. HUNT DATE : 8/18

DOCUMENT NOT CONSIDERED FINAL UNLESS ALL SIGNATURES COMPLETED

P:\2018\18127.02_R-2582A\Structures\Site 4\DGN\R2582A_SMU_ CU_650031.dgn
9/25/2018 11:23:31 AM

DocuSign Envelope ID: 35BF86D9-BE4A-4B2F-B03E-21E2B375220B

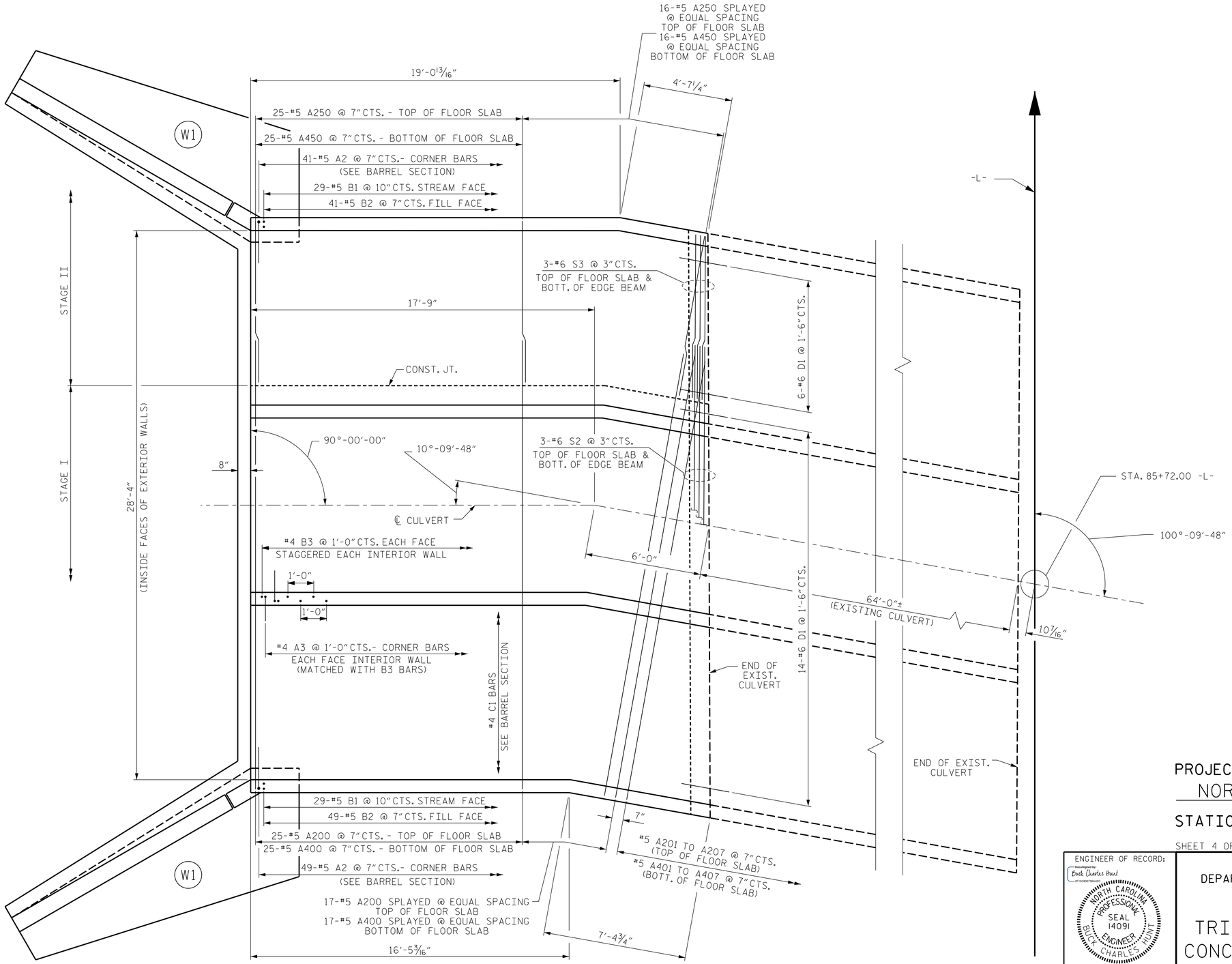

NOTE: C1 BARS TO BE FIELD BENT AS NECESSARY

PLAN - FLOOR SLAB

PROJECT NO. R-2582A
NORTHAMPTON COUNTY
STATION: 85+72.00 -L-

SHEET 4 OF 10

ENGINEER OF RECORD:
Brock Charles Hunt
NORTH CAROLINA PROFESSIONAL SEAL 14091 ENGINEER BROCK CHARLES HUNT
9/25/2018

WETHERILL ENGINEERING
1223 Jones Franklin Rd.
Raleigh, N.C. 27606
Bus: 919 851 8077
Fax: 919 851 8107
LICENSE NO. F-0377

STATE OF NORTH CAROLINA
DEPARTMENT OF TRANSPORTATION
RALEIGH

TRIPLE 9 FT. x 9 FT. CONCRETE BOX CULVERT (LEFT EXTENSION)

REVISIONS						SHEET NO.
NO.	BY:	DATE:	NO.	BY:	DATE:	C1-4
1			3			TOTAL SHEETS
2			4			10

DRAWN BY : D. HODGE DATE : 7/18
CHECKED BY : B.C. HUNT DATE : 8/18

DOCUMENT NOT CONSIDERED FINAL UNLESS ALL SIGNATURES COMPLETED

P:\2018\18127.02 R-2582A\Structures\Site 4\DGN\R2582A_SMU_ CU_650031.dgn
9/25/2018 11:24:06 AM

DocuSign Envelope ID: 35BF86D9-BE4A-4B2F-B03E-21E2B375220B

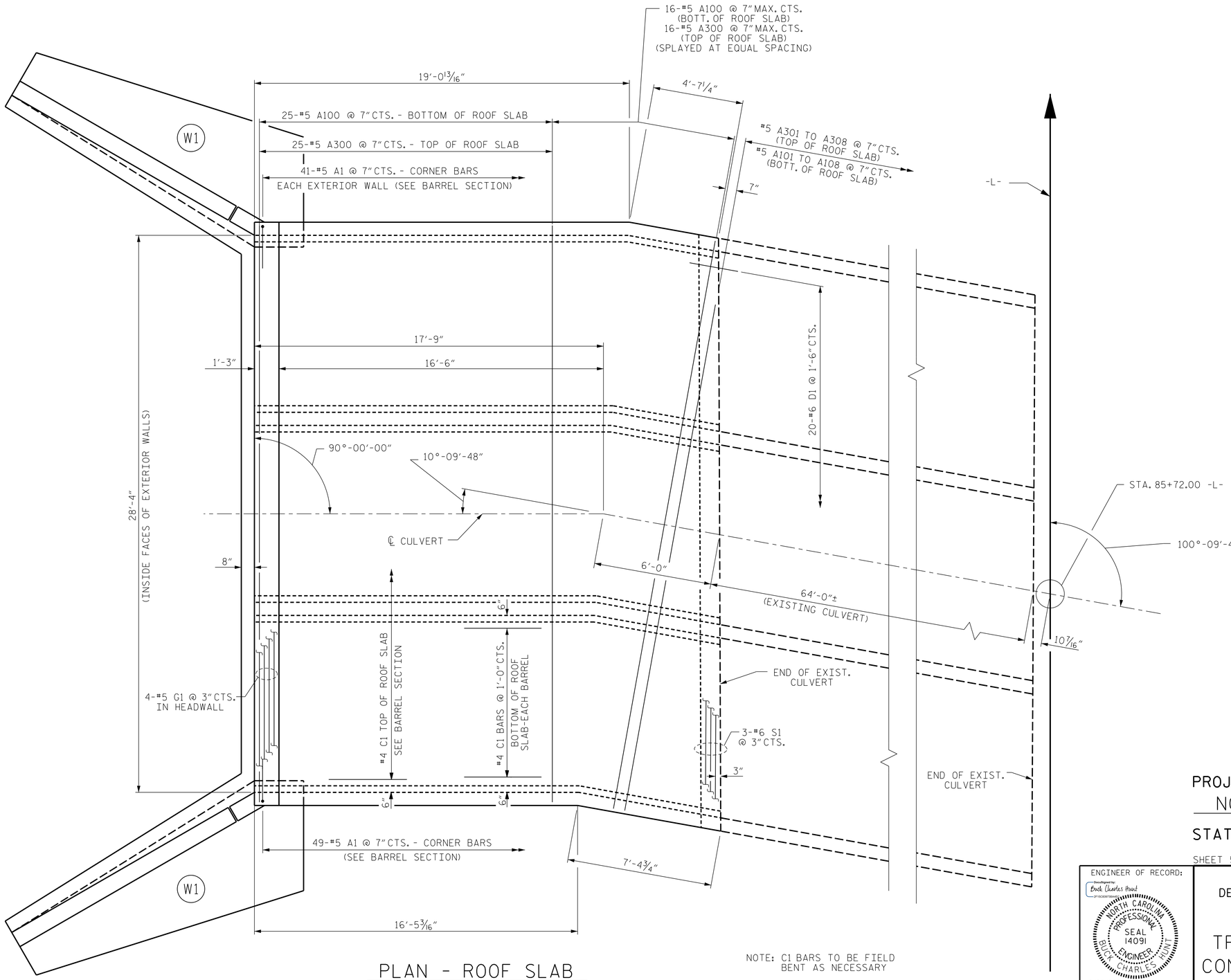

PLAN - ROOF SLAB

NOTE: C1 BARS TO BE FIELD BENT AS NECESSARY

PROJECT NO. R-2582A

NORTHAMPTON COUNTY

STATION: 85+72.00 -L-

SHEET 5 OF 10

ENGINEER OF RECORD:

Docusigned by: Buck Charles Hunt

NORTH CAROLINA PROFESSIONAL SEAL 14091 ENGINEER BUCK CHARLES HUNT

9/25/2018

WETHERILL ENGINEERING

1223 Jones Franklin Rd.
Raleigh, N.C. 27606
Bus: 919 851 8077
Fax: 919 851 8107
LICENSE NO. F-0377

STATE OF NORTH CAROLINA
DEPARTMENT OF TRANSPORTATION
RALEIGH

TRIPLE 9 FT. x 9 FT. CONCRETE BOX CULVERT (LEFT EXTENSION)

REVISIONS						SHEET NO.
NO.	BY:	DATE:	NO.	BY:	DATE:	C1-5
1			3			TOTAL SHEETS
2			4			10

DOCUMENT NOT CONSIDERED FINAL UNLESS ALL SIGNATURES COMPLETED

DRAWN BY : D. HODGE DATE : 7/18
CHECKED BY : B.C. HUNT DATE : 8/18

P:\2018\18127.02_R-2582A\Structures\Site 4\DGN\R2582A_SMU_CU_650031.dgn
9/25/2018 11:24:35 AM

DocuSign Envelope ID: 35BF86D9-BE4A-4B2F-B03E-21E2B375220B

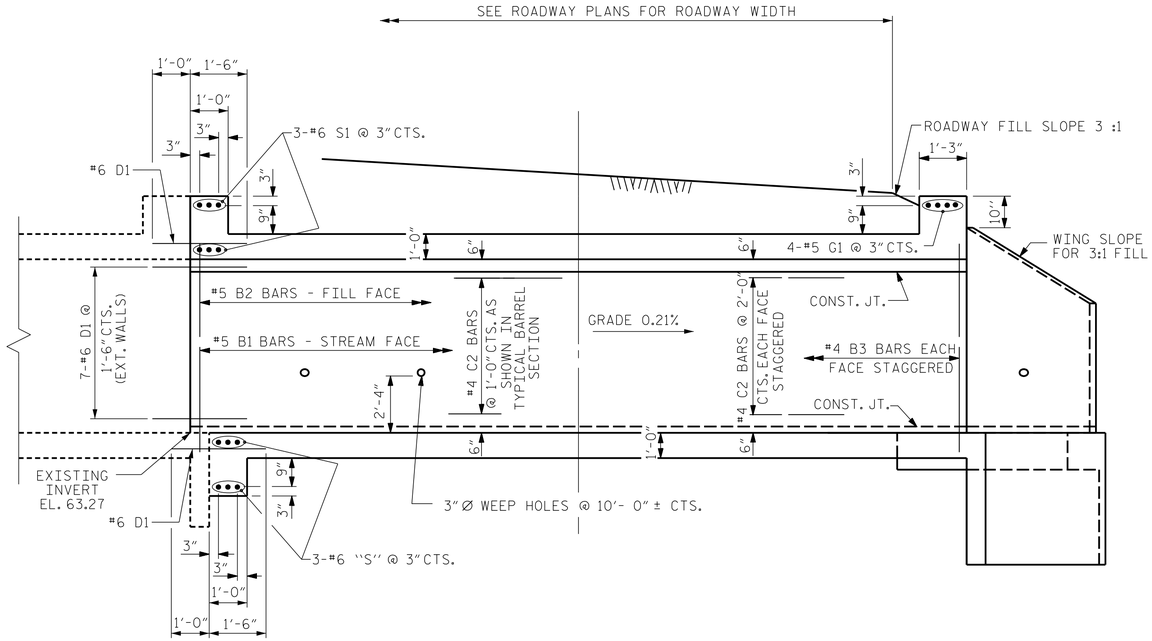

EXTERIOR WALL INTERIOR WALL

CULVERT SECTION NORMAL TO ROADWAY

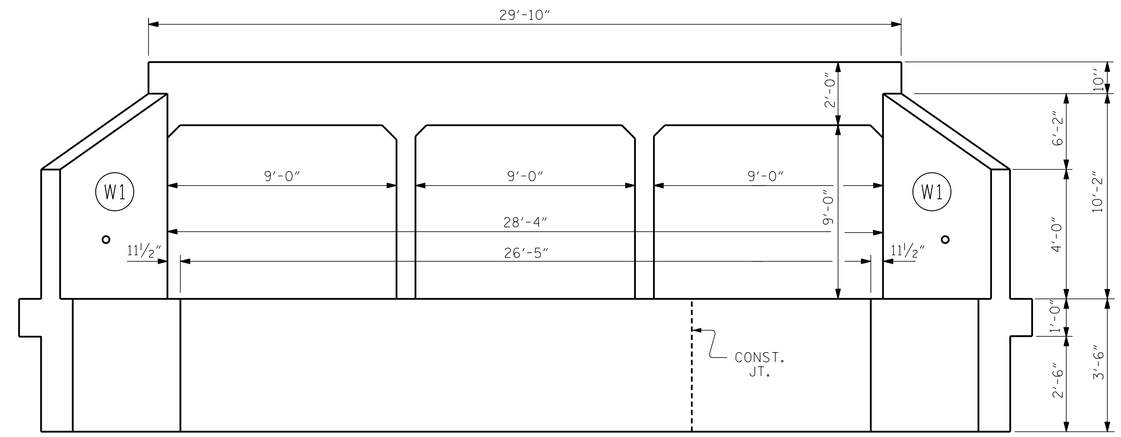

END ELEVATION

(LOOKING UPSTREAM)

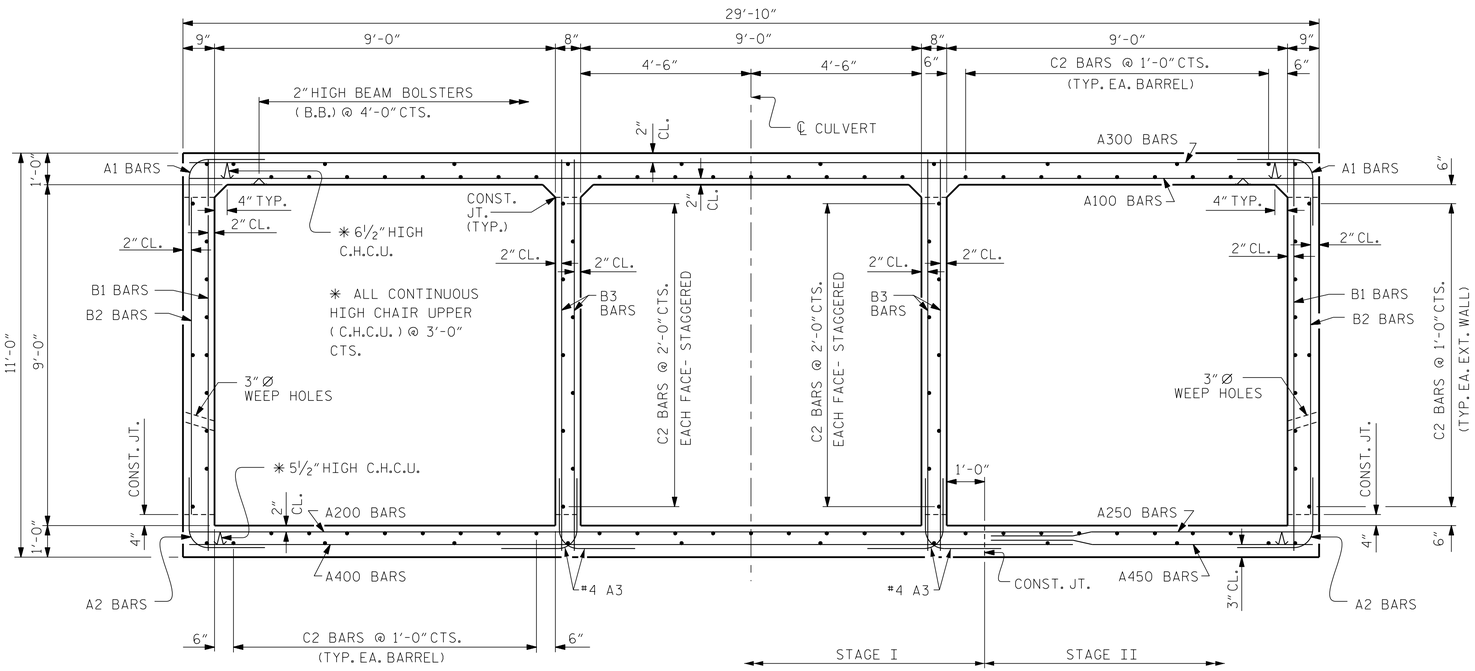

RIGHT ANGLE SECTION OF BARREL LOOKING UPSTREAM

THERE ARE 112 "C" BARS IN SECTION OF BARREL.

PROJECT NO. R-2582A

NORTHAMPTON COUNTY

STATION: 85+72.00 -L-

SHEET 6 OF 10

ENGINEER OF RECORD:

Developed by: Brock Charles Hunt

NORTH CAROLINA PROFESSIONAL SEAL 14091 ENGINEER BROCK CHARLES HUNT

9/25/2018

WETHERILL ENGINEERING

1223 Jones Franklin Rd.
Raleigh, N.C. 27606
Bus: 919 851 8077
Fax: 919 851 8107
LICENSE NO. F-0377

STATE OF NORTH CAROLINA
DEPARTMENT OF TRANSPORTATION
RALEIGH

TRIPLE 9 FT. X 9 FT. CONCRETE BOX CULVERT (RIGHT EXTENSION)

REVISIONS							SHEET NO.
NO.	BY:	DATE:	NO.	BY:	DATE:		C1-6
1			3				TOTAL SHEETS
2			4				10

DOCUMENT NOT CONSIDERED FINAL UNLESS ALL SIGNATURES COMPLETED

DRAWN BY : D. HODGE DATE : 7/18
CHECKED BY : B.C. HUNT DATE : 8/18

P:\2018\18127.02_R-2582A\Structures\Site 4\DGN\R2582A_SMU_ CU_650031.dgn
9/25/2018 11:24:52 AM

DocuSign Envelope ID: 35BF86D9-BE4A-4B2F-B03E-21E2B375220B

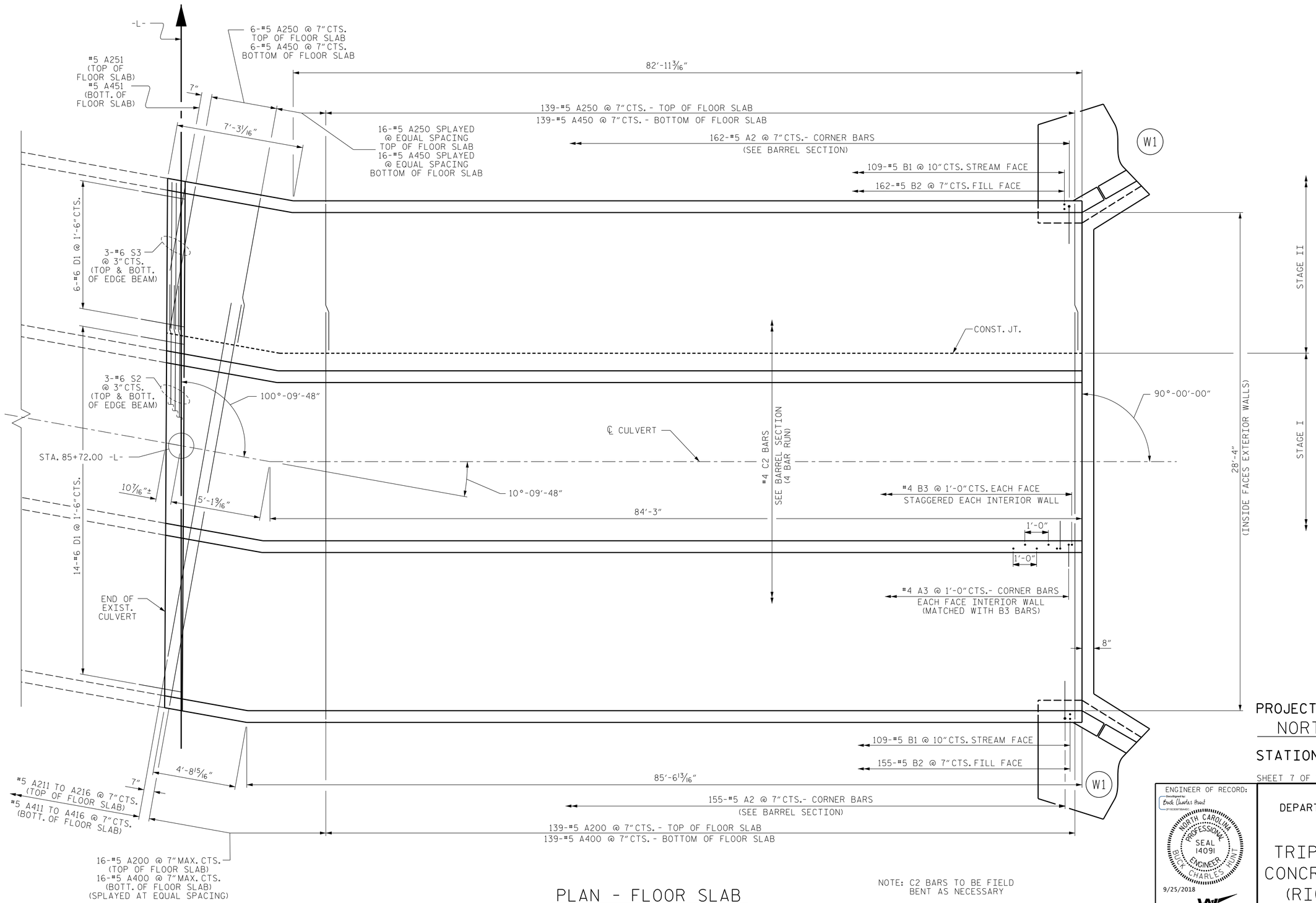

PLAN - FLOOR SLAB

NOTE: C2 BARS TO BE FIELD BENT AS NECESSARY

PROJECT NO. R-2582A

NORTHAMPTON COUNTY

STATION: 85+72.00 -L-

SHEET 7 OF 10

ENGINEER OF RECORD:
Developed by Buck Charles Hunt
OF NORTHERN

NORTH CAROLINA PROFESSIONAL SEAL 14091 ENGINEER BUCK CHARLES HUNT

9/25/2018

WETHERILL ENGINEERING
1223 Jones Franklin Rd.
Raleigh, N.C. 27606
Bus: 919 851 8077
Fax: 919 851 8107
LICENSE NO. F-0377

STATE OF NORTH CAROLINA
DEPARTMENT OF TRANSPORTATION
RALEIGH

TRIPLE 9 FT. x 9 FT. CONCRETE BOX CULVERT (RIGHT EXTENSION)

REVISIONS						SHEET NO.
NO.	BY:	DATE:	NO.	BY:	DATE:	C1-7
1			3			TOTAL SHEETS
2			4			10

DRAWN BY : D. HODGE DATE : 7/18
CHECKED BY : B.C. HUNT DATE : 8/18

DOCUMENT NOT CONSIDERED FINAL UNLESS ALL SIGNATURES COMPLETED

P:\2018\18127.02_R-2582A\Structures\Site 4\DGN\R2582A_SWU_CU_650031.dgn
9/25/2018 11:25:19 AM

DocuSign Envelope ID: 35BF86D9-BE4A-4B2F-B03E-21E2B375220B

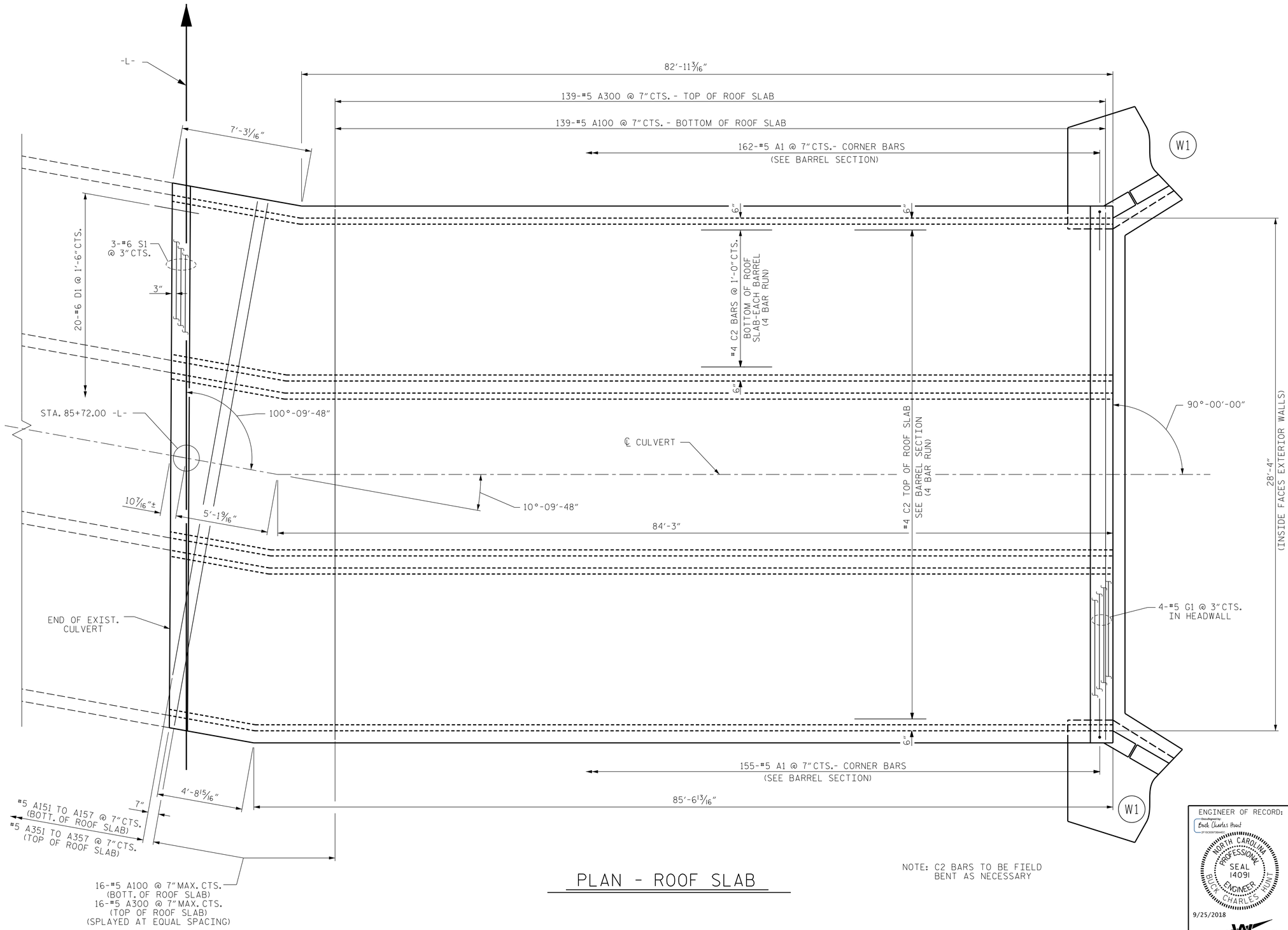

PLAN - ROOF SLAB

NOTE: C2 BARS TO BE FIELD BENT AS NECESSARY

PROJECT NO. R-2582A

NORTHAMPTON COUNTY

STATION: 85+72.00 -L-

SHEET 8 OF 10

ENGINEER OF RECORD:

Docusigned by: Buck Charles Hunt

NORTH CAROLINA PROFESSIONAL SEAL 14091 ENGINEER BUCK CHARLES HUNT

9/25/2018

WETHERILL ENGINEERING

1223 Jones Franklin Rd.
Raleigh, N.C. 27606
Bus: 919 851 8077
Fax: 919 851 8107
LICENSE NO. F-0377

STATE OF NORTH CAROLINA
DEPARTMENT OF TRANSPORTATION
RALEIGH

TRIPLE 9 FT. x 9 FT. CONCRETE BOX CULVERT (RIGHT EXTENSION)

REVISIONS						SHEET NO.
NO.	BY:	DATE:	NO.	BY:	DATE:	C1-8
1			3			TOTAL SHEETS
2			4			10

DRAWN BY : D. HODGE DATE : 7/18

CHECKED BY : B.C. HUNT DATE : 8/18

DOCUMENT NOT CONSIDERED FINAL UNLESS ALL SIGNATURES COMPLETED

P:\2018\18127.02_R-2582A\Structures\Site 4\DGN\R2582A_SMU_ CU_650031.dgn
9/25/2018 11:25:41 AM

DocuSign Envelope ID: 35BF86D9-BE4A-4B2F-B03E-21E2B375220B

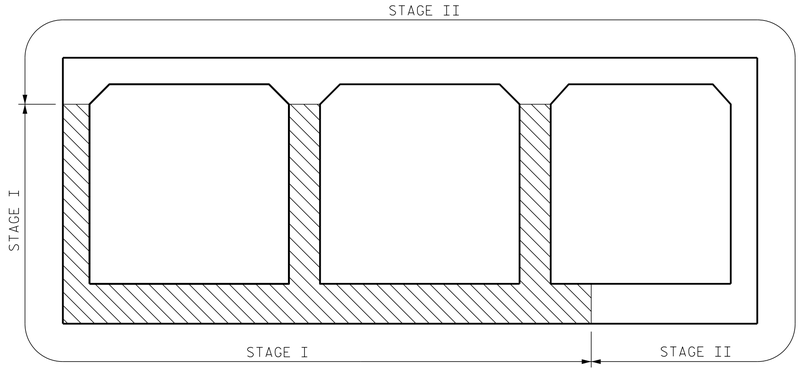

CONSTRUCTION SEQUENCE

LOOKING UPSTREAM

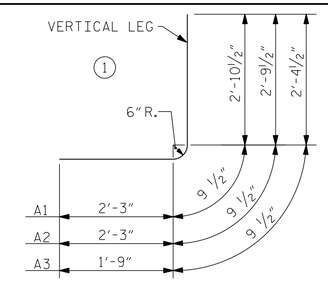

BAR TYPE

BAR DIMENSIONS ARE OUT TO OUT

SPLICE LENGTHS CHART

BAR	SIZE	SPLICE LENGTH
A200	#5	2'-2"
A400	#5	2'-2"
``B''	#5	2'-2"
``C''	#4	1'-11"
``S''	#6	2'-9"

BARREL REINFORCING STEEL

LEFT EXTENSION - STAGE I

BAR	NO	SIZE	TYPE	LENGTH	WEIGHT
A1	49	5	1	5'-11"	302
A2	49	5	1	5'-10"	298
A3	96	4	1	4'-11"	315
A200	42	5	STR	23'-3"	1018
A201	1	5	STR	23'-0"	24
A202	1	5	STR	19'-10"	21
A203	1	5	STR	16'-8"	17
A204	1	5	STR	13'-5"	14
A205	1	5	STR	10'-3"	11
A206	1	5	STR	7'-1"	7
A207	1	5	STR	3'-11"	4
A400	42	5	STR	23'-3"	1018
A401	1	5	STR	23'-0"	24
A402	1	5	STR	19'-10"	21
A403	1	5	STR	16'-8"	17
A404	1	5	STR	13'-5"	14
A405	1	5	STR	10'-3"	11
A406	1	5	STR	7'-1"	7
A407	1	5	STR	3'-11"	4
B1	29	5	STR	10'-7"	320
B2	49	5	STR	8'-4"	426
B3	96	4	STR	10'-7"	679
C1	54	4	STR	23'-4"	842
D1	21	6	STR	2'-6"	79
S2	6	6	STR	24'-3"	219
REINFORCING STEEL					5,712 LBS

LEFT EXTENSION - STAGE II

BAR	NO	SIZE	TYPE	LENGTH	WEIGHT
A1	41	5	1	5'-11"	253
A2	41	5	1	5'-10"	249
A250	41	5	STR	8'-4"	356
A450	41	5	STR	8'-4"	356
B1	29	5	STR	10'-7"	320
B2	41	5	STR	8'-4"	356
A100	41	5	STR	29'-6"	1262
A101	1	5	STR	26'-2"	27
A102	1	5	STR	23'-0"	24
A103	1	5	STR	19'-10"	21
A104	1	5	STR	16'-8"	17
A105	1	5	STR	13'-6"	14
A106	1	5	STR	10'-3"	11
A107	1	5	STR	7'-1"	7
A108	1	5	STR	3'-11"	4
A300	41	5	STR	29'-6"	1262
A301	1	5	STR	26'-2"	27
A302	1	5	STR	23'-0"	24
A303	1	5	STR	19'-10"	21
A304	1	5	STR	16'-8"	17
A305	1	5	STR	13'-6"	14
A306	1	5	STR	10'-3"	11
A307	1	5	STR	7'-1"	7
A308	1	5	STR	3'-11"	4
C1	58	4	STR	23'-4"	904
D1	33	6	STR	2'-6"	124
G1	4	5	STR	29'-6"	123
S1	6	6	STR	29'-11"	270
S3	6	6	STR	8'-6"	77
REINFORCING STEEL					6,162 LBS

RIGHT EXTENSION - STAGE I

BAR	NO	SIZE	TYPE	LENGTH	WEIGHT
A1	155	5	1	5'-11"	957
A2	155	5	1	5'-10"	943
A3	362	4	1	4'-11"	1189
A200	155	5	STR	23'-3"	3759
A211	1	5	STR	20'-5"	21
A212	1	5	STR	17'-1"	18
A213	1	5	STR	13'-8"	14
A214	1	5	STR	10'-4"	11
A215	1	5	STR	7'-0"	7
A216	1	5	STR	3'-7"	4
A400	155	5	STR	23'-3"	3759
A411	1	5	STR	20'-5"	21
A412	1	5	STR	17'-1"	18
A413	1	5	STR	13'-8"	14
A414	1	5	STR	10'-4"	11
A415	1	5	STR	7'-0"	7
A416	1	5	STR	3'-7"	4
B1	109	5	STR	10'-7"	1203
B2	155	5	STR	8'-4"	1347
B3	362	4	STR	10'-7"	2559
C2	216	4	STR	24'-0"	3463
D1	21	6	STR	2'-6"	79
S2	6	6	STR	24'-3"	219
REINFORCING STEEL					19,627 LBS

RIGHT EXTENSION - STAGE II

BAR	NO	SIZE	TYPE	LENGTH	WEIGHT
A1	162	5	1	5'-11"	1000
A2	162	5	1	5'-10"	986
A250	161	5	STR	8'-4"	1399
A251	1	5	STR	6'-0"	6
A450	161	5	STR	8'-4"	1399
A451	1	5	STR	6'-0"	6
B1	109	5	STR	10'-7"	1203
B2	162	5	STR	8'-4"	1408
A100	155	5	STR	29'-6"	4769
A151	1	5	STR	26'-0"	27
A152	1	5	STR	22'-8"	24
A153	1	5	STR	19'-4"	20
A154	1	5	STR	15'-11"	17
A155	1	5	STR	12'-7"	13
A156	1	5	STR	9'-3"	10
A157	1	5	STR	5'-10"	6
A300	155	5	STR	29'-6"	4769
A351	1	5	STR	26'-0"	27
A352	1	5	STR	22'-8"	24
A353	1	5	STR	19'-4"	20
A354	1	5	STR	15'-11"	17
A355	1	5	STR	12'-7"	13
A356	1	5	STR	9'-3"	10
A357	1	5	STR	5'-10"	6
C2	232	4	STR	24'-0"	3719
D1	33	6	STR	2'-6"	124
G1	4	5	STR	29'-6"	123
S1	6	6	STR	29'-11"	270
S3	6	6	STR	8'-6"	77
REINFORCING STEEL					21,492 LBS

PROJECT NO. R-2582A

NORTHAMPTON COUNTY

STATION: 85+72.00 -L-

SHEET 9 OF 10

ENGINEER OF RECORD:

Developed by Buck Charles Hunt

NORTH CAROLINA PROFESSIONAL SEAL 14091 ENGINEER BUCK CHARLES HUNT

9/25/2018

WETHERILL ENGINEERING

1223 Jones Franklin Rd.
Raleigh, N.C. 27606
Bus: 919 851 8077
Fax: 919 851 8107
LICENSE NO. F-0377

STATE OF NORTH CAROLINA
DEPARTMENT OF TRANSPORTATION
RALEIGH

TRIPLE BARREL
9 FT. X 9 FT.
CONCRETE BOX CULVERT
LEFT & RIGHT EXTENSIONS

REVISIONS						SHEET NO.
NO.	BY:	DATE:	NO.	BY:	DATE:	C1-9
1			3			TOTAL SHEETS
2			4			10

DRAWN BY : D. HODGE DATE : 7/18
CHECKED BY : B.C. HUNT DATE : 8/18

DOCUMENT NOT CONSIDERED FINAL UNLESS ALL SIGNATURES COMPLETED

P:\2018\18127.02 R-2582A\Structures\Site 4\DGN\R2582A_SWU_ CU_650031.dgn
9/25/2018 11:26:03 AM

DocuSign Envelope ID: 35BF86D9-BE4A-4B2F-B03E-21E2B375220B

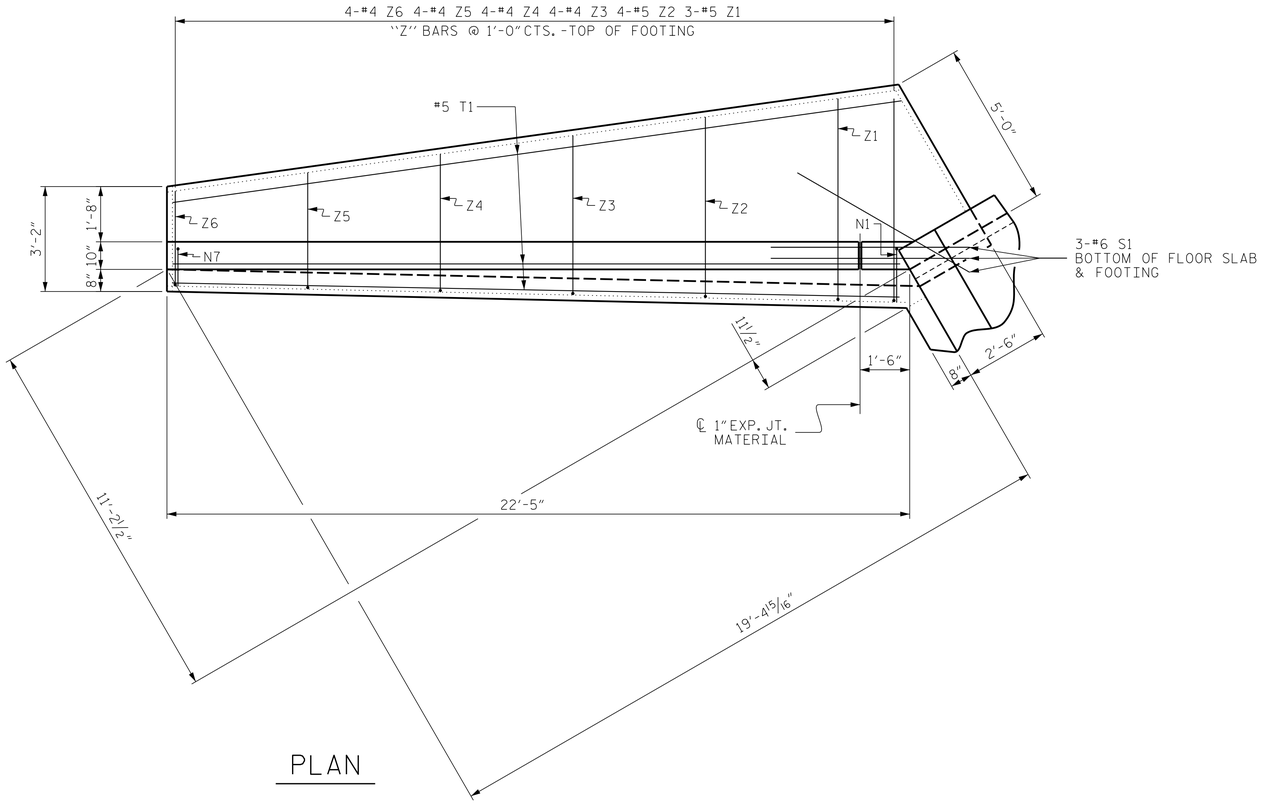

PLAN

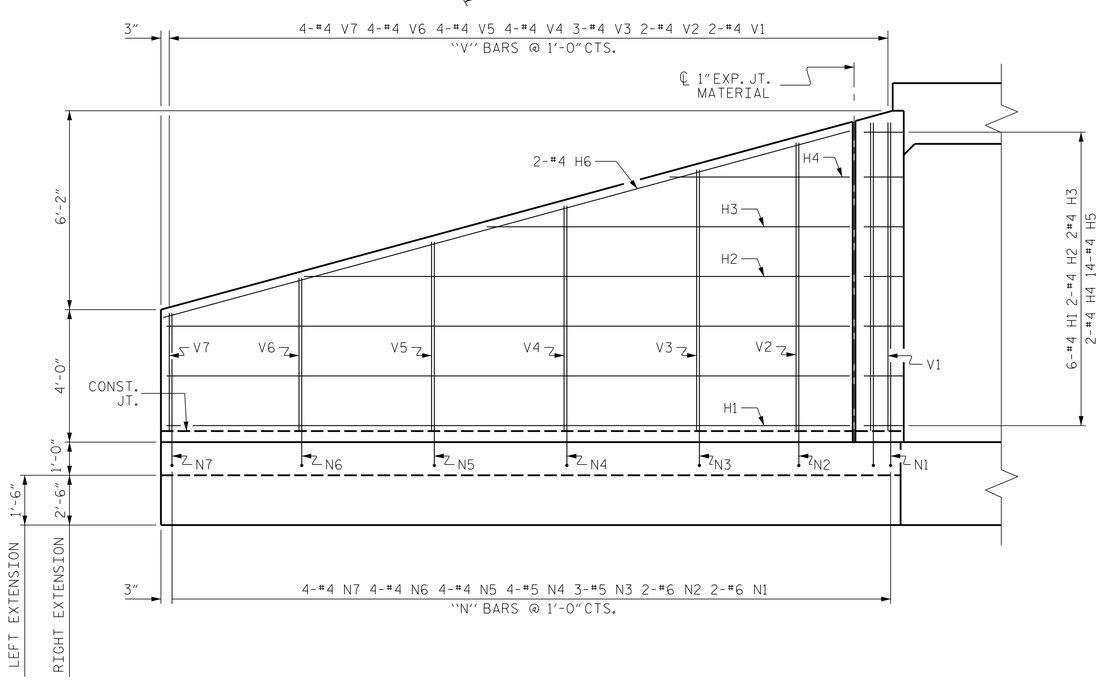

ELEVATION

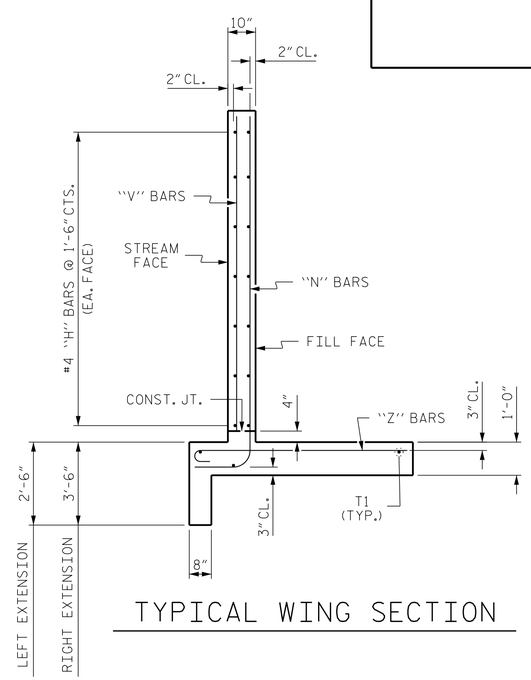

TYPICAL WING SECTION

BAR TYPES

ALL BAR DIMENSIONS ARE OUT TO OUT.

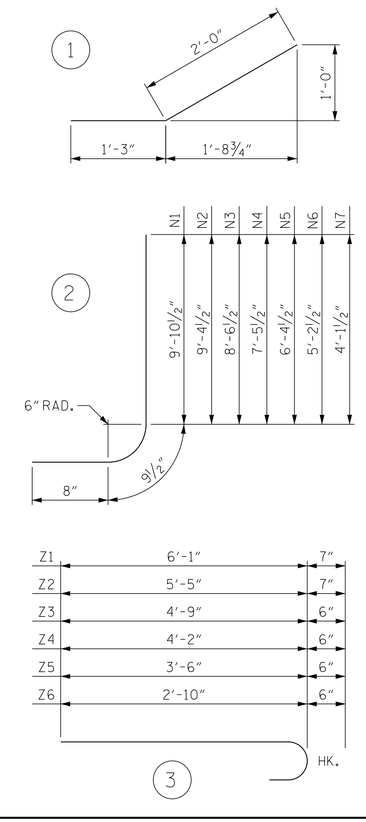

BILL OF MATERIAL

BAR	NO.	SIZE	TYPE	LENGTH	WEIGHT
H1	24	#4	STR	19'-10"	318
H2	8	#4	STR	16'-5"	88
H3	8	#4	STR	10'-11"	58
H4	8	#4	STR	5'-5"	29
H5	56	#4	1	3'-3"	122
H6	8	#4	STR	21'-5"	114
N1	8	#6	2	11'-4"	136
N2	8	#6	2	10'-10"	130
N3	12	#5	2	10'-0"	125
N4	16	#5	2	8'-11"	149
N5	16	#4	2	7'-10"	84
N6	16	#4	2	6'-8"	71
N7	16	#4	2	5'-7"	60
S1	12	#6	STR	6'-0"	108
T1	12	#5	STR	21'-11"	274
V1	8	#4	STR	9'-2"	49
V2	8	#4	STR	8'-8"	46
V3	12	#4	STR	7'-10"	63
V4	16	#4	STR	6'-9"	72
V5	16	#4	STR	5'-8"	61
V6	16	#4	STR	4'-7"	49
V7	16	#4	STR	3'-6"	37
Z1	12	#5	3	6'-8"	83
Z2	16	#5	3	6'-0"	100
Z3	16	#4	3	5'-3"	56
Z4	16	#4	3	4'-8"	50
Z5	16	#4	3	4'-0"	43
Z6	16	#4	3	3'-4"	36

REINFORCING STEEL FOR 4 WINGS 2,611 LBS

CLASS A CONCRETE FOR 4 WINGS 42.0 CY

PROJECT NO. R-2582A
NORTHAMPTON COUNTY
STATION: 85+72.00 -L-

SHEET 10 OF 10

ENGINEER OF RECORD:
Brick Charles Hunt
NORTH CAROLINA PROFESSIONAL SEAL 14091 ENGINEER BRICK CHARLES HUNT
9/25/2018

WETHERILL ENGINEERING
1223 Jones Franklin Rd.
Raleigh, N.C. 27606
Bus: 919 851 8077
Fax: 919 851 8107
LICENSE NO. F-0377

STATE OF NORTH CAROLINA
DEPARTMENT OF TRANSPORTATION
RALEIGH

WINGS FOR CONCRETE BOX CULVERT

H = 9'-0" SLOPE = 3:1
90° SKEW

REVISIONS						SHEET NO.
NO.	BY:	DATE:	NO.	BY:	DATE:	C1-10
1			3			TOTAL SHEETS
2			4			10

DRAWN BY : D. HODGE DATE : 7/18
CHECKED BY : B.C. HUNT DATE : 8/18

DOCUMENT NOT CONSIDERED FINAL UNLESS ALL SIGNATURES COMPLETED

DocuSign Envelope ID: 7821A7C2-BB88-407C-8FA6-8F90FBDEDF16

BM #6 RR SPIKE IN 36"HICKORY, STA.277+97.00 -L-, 99.00' LT., EL. 79.42 (N 981867; E 2428712)

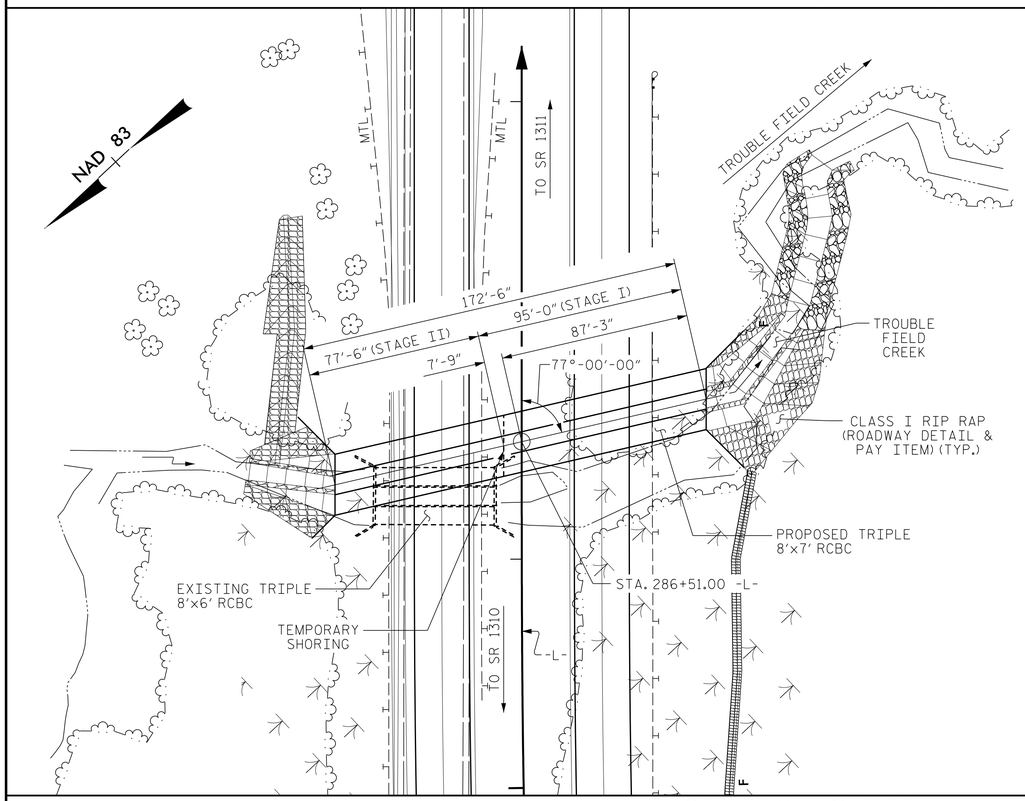

LOCATION SKETCH

FOR UTILITY INFORMATION, SEE UTILITY PLANS AND SPECIAL PROVISIONS.

ROADWAY DATA

GRADE POINT ELEV. @ STA 286+51.00 -L-	= 87.28
BED ELEV. @ STATION 286+51.00 -L-	= 70.73
ROADWAY SLOPES	= 3:1

HYDRAULIC DATA

DESIGN DISCHARGE	= 650 CFS
FREQUENCY OF DESIGN FLOOD	= 50 YEARS
DESIGN HIGH WATER ELEVATION	= 77.00
DRAINAGE AREA	= 3.4 SQ. MI.
BASE DISCHARGE (Q100)	= 800 CFS
BASE HIGH WATER ELEVATION	= 77.36

OVERTOPPING FLOOD DATA

OVERTOPPING DISCHARGE	= 2600+ CFS
FREQUENCY OF OVERTOPPING FLOOD	= 500+ YEAR
OVERTOPPING FLOOD ELEVATION	= 86.89

PROPOSED OVERTOPPING OCCURS AT STA. 285+35.00 -L-, WITH LOW G.P. ELEV. = 86.89

NOTES:

ASSUMED LIVE LOAD ----------HL-93 OR ALTERNATE LOADING.

DESIGN FILL TO
BOTT. OF TOP SLAB-------- 9.9 FT. MAX., 6.4 FT. MIN.

FOR OTHER DESIGN DATA AND NOTES SEE STANDARD NOTE SHEET.

3" Ø WEEP HOLES INDICATED TO BE IN ACCORDANCE WITH THE SPECIFICATIONS.

CONCRETE IN CULVERTS TO BE POURED IN THE FOLLOWING ORDER:

STAGE I

1. WING FOOTINGS AND FLOOR SLAB INCLUDING 4" OF ALL VERTICAL WALLS.
2. THE REMAINING PORTIONS OF THE WALLS AND WINGS FULL HEIGHT FOLLOWED BY ROOF SLAB AND HEADWALLS.

STAGE II

1. WING FOOTINGS AND FLOOR SLAB INCLUDING 4" OF ALL VERTICAL WALLS.
2. THE REMAINING PORTIONS OF THE WALLS AND WINGS FULL HEIGHT FOLLOWED BY ROOF SLAB AND HEADWALLS.

THE RESIDENT ENGINEER SHALL CHECK THE LENGTH OF CULVERT BEFORE STAKING IT OUT TO MAKE CERTAIN THAT IT WILL PROPERLY TAKE CARE OF THE FILL.

DIMENSIONS FOR WING LAYOUT AS WELL ADDITIONAL REINFORCING STEEL EMBEDDED IN BARREL ARE SHOWN ON WING SHEET.

TRANSVERSE CONSTRUCTION JOINTS SHALL BE USED IN THE BARREL, SPACED TO LIMIT THE POURS TO A MAXIMUM OF 70 FT. LOCATION OF JOINTS SHALL BE SUBJECT TO APPROVAL OF THE ENGINEER.

STEEL IN THE BOTTOM SLAB MAY BE SPLICED AT THE PERMITTED CONSTRUCTION JOINT AT THE CONTRACTOR'S OPTION. EXTRA WEIGHT OF STEEL DUE TO THE SPLICES SHALL BE PAID FOR BY THE CONTRACTOR.

AT THE CONTRACTOR'S OPTION, HE MAY SPLICE THE VERTICAL REINFORCING STEEL IN THE INTERIOR FACE OF EXTERIOR WALL AND BOTH FACES OF INTERIOR WALLS ABOVE LOWER WALL CONSTRUCTION JOINT. THE SPLICE LENGTH SHALL BE AS PROVIDED IN THE SPLICE LENGTH CHART SHOWN ON THE PLANS. EXTRA WEIGHT OF STEEL DUE TO THE SPLICES SHALL BE PAID FOR BY THE CONTRACTOR.

THE EXISTING STRUCTURE CONSISTING OF A 3 @ 8'x6' REINFORCED CONCRETE BOX CULVERT 54' LONG SHALL BE REMOVED. THE EXISTING CULVERT IS PRESENTLY NOT POSTED FOR LOAD LIMIT.

FOR CULVERT DIVERSIONS DETAILS AND PAY ITEM, SEE EROSION CONTROL PLANS.

A 3 FOOT STRIP OF FILTER FABRIC SHALL BE ATTACHED TO THE FILL FACE OF THE WING COVERING THE ENTIRE LENGHT OF EXPANSION JOINT.

FOR SUBMITTAL OF WORKING DRAWINGS, SEE SPECIAL PROVISIONS.

FOR FALSEWORK AND FORMWORK, SEE SPECIAL PROVISIONS.

FOR CRANE SAFETY, SEE SPECIAL PROVISIONS.

FOR GROUT FOR STRUCTURES, SEE SPECIAL PROVISIONS.

NATIVE MATERIAL BETWEEN SILLS IN THE CULVERT SHALL PROVIDE A CONTINUOUS LOW FLOW CHANNEL. NATIVE MATERIAL CONSISTS OF MATERIAL THAT IS EXCAVATED FROM THE STREAM BED OR FLOODPLAIN AT THE PROJECT SITE DURING CULVERT EXCAVATION. ONLY MATERIAL THAT IS EXCAVATED FROM THE STREAM BED MAY BE USED TO LINE THE LOW FLOW CULVERT BARREL. CLASS B RIP RAP MAY BE USED TO SUPPLEMENT THE NATIVE MATERIAL IN THE HIGH FLOW CULVERT BARRELS. IF RIP RAP IS USED TO LINE THE HIGH FLOW CULVERT BARREL NATIVE MATERIAL SHOULD BE PLACED ON TOP TO FILL VOIDS AND PROVIDE A FLAT SURFACE FOR ANIMAL PASSAGE. NATIVE MATERIAL IS SUBJECT TO APPROVAL BY THE ENGINEER AND MAY BE SUBJECT TO PERMIT CONDITIONS. COST OF BACKFILLING THE CULVERT SHALL BE INCLUDED IN THE VARIOUS PAY ITEMS.

NOTES CONTINUED:

FOR LIMITS OF TEMPORARY SHORING FOR MAINTENANCE OF TRAFFIC, SEE TRAFFIC CONTROL PLANS. FOR PAY ITEM FOR TEMPORARY SHORING FOR MAINTENANCE OF TRAFFIC, SEE ROADWAY PLANS.

FOR ASBESTOS ASSESSMENT FOR CULVERT DEMOLITION AND RENOVATION ACTIVITIES, SEE SPECIAL PROVISIONS.

AT THE CONTRACTOR'S OPTION HE MAY SUBMIT, TO THE ENGINEER FOR APPROVAL, DESIGN AND DETAIL DRAWINGS FOR A PRECAST REINFORCED CONCRETE BOX CULVERT IN LIEU OF THE CAST-IN-PLACE CULVERT SHOWN ON THE PLANS. THE DESIGN SHALL PROVIDE THE SAME SIZE AND NUMBER OF BARRELS AS USED ON THE CAST-IN-PLACE DESIGN. FOR OPTIONAL PRECAST REINFORCED CONCRETE BOX CULVERT, SEE SPECIAL PROVISIONS.

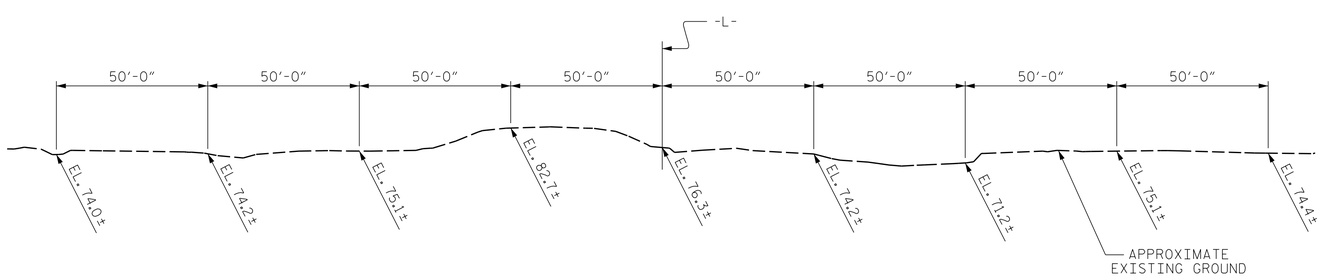

PROFILE ALONG ℄ CULVERT

TOTAL BILL OF MATERIAL

MATERIAL	ELEMENT	STAGE I	STAGE II
CLASS A CONCRETE (CU. YDS.)	BARREL	223.2	182.1
	HEADWALLS	1.3	1.3
	CURTAIN WALLS	1.6	1.6
	EDGE BEAMS	2.1	2.1
	WINGS	14.0	14.0
	SILLS	1.2	1.2
	TOTAL	243.4	202.3
	TOTAL	445.7	
REINFORCING STEEL (LBS.)	BARREL	32,791	26,728
	WINGS	907	906
	TOTAL	33,698	27,634
	TOTAL	61,332	
FOUNDATION COND. MAT'L (TONS)	———	180	145
	TOTAL	325	
CULVERT EXCAVATION			LUMP SUM
REMOVAL OF EXISTING STRUCTURE			LUMP SUM
ASBESTOS ASSESSMENT			LUMP SUM

DOCUMENT NOT CONSIDERED FINAL UNLESS ALL SIGNATURES COMPLETED

PROJECT NO. R-2582A
NORTHAMPTON COUNTY
STATION: 286+51.00 -L-

SHEET 1 OF 9 REPLACES CULVERT No. 650005

ENGINEER OF RECORD:
Brick Charles Hunt
NORTH CAROLINA PROFESSIONAL SEAL 14091 ENGINEER BRICK CHARLES HUNT
9/25/2018

WETHERILL ENGINEERING
1223 Jones Franklin Rd.
Raleigh, N.C. 27606
Bus: 919 851 8077
Fax: 919 851 8107
LICENSE NO. F-0377

STATE OF NORTH CAROLINA
DEPARTMENT OF TRANSPORTATION
RALEIGH

BARREL STANDARD TRIPLE 8 FT. X 7 FT. CONCRETE BOX CULVERT

REVISIONS						SHEET NO.
NO.	BY:	DATE:	NO.	BY:	DATE:	C2-1
1			3			TOTAL SHEETS
2			4			9

STD. NO. CB23A

ASSEMBLED BY : D. HODGE DATE : 6/18	SPECIAL	
CHECKED BY : B.C. HUNT DATE : 8/18		
DRAWN BY : R.W.WRIGHT DATE : OCT. 1989	STANDARD	
CHECKED BY : A.R.BISSETTE DATE : OCT. 1989		

P:\2018\18127.02 R-2582A\Structures\Site 5\DGN\STR5_R2582A_SMU_CU_650005.dgn
9/25/2018 11:18:54 AM ADDED II-1-90

DocuSign Envelope ID: 7821A7C2-BB88-407C-8FA6-8F90FBDEDF16

LOAD AND RESISTANCE FACTOR RATING (LRFR) SUMMARY FOR REINFORCED CONCRETE BOX CULVERTS

LEVEL		VEHICLE	WEIGHT (W) (TONS)	CONTROLLING LOAD RATING (#)	MINIMUM RATING FACTORS (RF)	TONS = W × RF	STRENGTH I LIMIT STATE									COMMENT NUMBER
							LIVE-LOAD FACTORS (γ_{LL})	MOMENT				SHEAR				
								RATING FACTOR	BOX NO.	ELEMENT TYPE	DISTANCE FROM LEFT END OF ELEMENT (ft)	RATING FACTOR	BOX NO.	ELEMENT TYPE	DISTANCE FROM LEFT END OF ELEMENT (ft)	
DESIGN LOAD RATING		HL-93 (INVENTORY)	N/A	1	1.26	--	1.75	1.26	1	TOP SLAB	8.67	1.26	1	TOP SLAB	8.07	
		HL-93 (OPERATING)	N/A		1.63	--	1.35	1.63	1	TOP SLAB	8.67	1.65	1	TOP SLAB	8.07	
		HS-20 (INVENTORY)	36.000	2	1.43	51.48	1.75	1.59	1	TOP SLAB	3.80	1.43	1	TOP SLAB	8.07	
		HS-20 (OPERATING)	36.000		1.86	66.96	1.35	2.06	1	TOP SLAB	3.80	1.86	1	TOP SLAB	8.07	
LEGAL LOAD RATING	SINGLE VEHICLE (SV)	SNSH	13.500		2.49	33.62	1.40	2.77	1	TOP SLAB	3.80	2.49	1	TOP SLAB	8.07	
		SNGARBS2	20.000		2.34	46.80	1.40	2.60	1	TOP SLAB	3.80	2.34	1	TOP SLAB	8.07	
		SNAGRIS2	22.000		2.47	54.34	1.40	2.75	1	TOP SLAB	3.80	2.47	1	TOP SLAB	8.07	
		SNCOTTS3	27.250		1.66	45.24	1.40	1.73	1	TOP SLAB	8.67	1.66	1	TOP SLAB	8.07	
		SNAGGRS4	34.925		1.51	52.74	1.40	1.74	1	TOP SLAB	8.67	1.51	1	TOP SLAB	8.07	
		SNS5A	35.550		1.54	54.75	1.40	1.76	1	TOP SLAB	8.67	1.54	1	TOP SLAB	8.07	
		SNS6A	39.950		1.48	59.13	1.40	1.50	1	TOP SLAB	8.67	1.48	1	TOP SLAB	8.07	
		SNS7B	42.000		1.48	62.16	1.40	1.48	1	TOP SLAB	8.67	1.48	1	TOP SLAB	8.07	
	TRUCK TRACTOR SEMI-TRAILER (TTST)	TNAGRIT3	33.000		1.94	64.02	1.40	2.13	1	TOP SLAB	8.67	1.94	1	TOP SLAB	8.07	
		TNT4A	33.075		1.84	60.86	1.40	1.91	1	TOP SLAB	8.67	1.84	1	TOP SLAB	8.07	
		TNT6A	41.600		1.58	65.73	1.40	1.71	1	TOP SLAB	8.67	1.58	1	TOP SLAB	8.07	
		TNT7A	42.000		1.71	71.82	1.40	1.86	1	TOP SLAB	8.67	1.71	1	TOP SLAB	8.07	
		TNT7B	42.000		1.53	64.26	1.40	1.64	1	TOP SLAB	8.67	1.53	1	TOP SLAB	8.07	
		TNAGRIT4	43.000		1.61	69.23	1.40	1.74	1	TOP SLAB	8.67	1.61	1	TOP SLAB	8.07	
		TNAGT5A	45.000		1.64	73.80	1.40	1.84	1	TOP SLAB	8.67	1.64	1	TOP SLAB	8.07	
		TNAGT5B	45.000	3	1.47	66.15	1.40	1.62	1	TOP SLAB	8.67	1.47	1	TOP SLAB	8.07	

LOAD FACTORS:

DESIGN LOAD RATING FACTORS

LOAD TYPE	MAX FACTOR	MIN FACTOR
DC	1.25	0.90
DW	1.50	0.65
EV	1.30	0.90
EH	1.35	0.90
ES	1.35	0.90
LS	1.75	--
WA	1.00	--

NOTE:

RATING FACTORS ARE BASED ON THE STRENGTH I LIMIT STATE.

COMMENTS:

1.
2.
3.
4.

(#) CONTROLLING LOAD RATING

(1) DESIGN LOAD RATING (HL-93)

(2) DESIGN LOAD RATING (HS-20)

(3) LEGAL LOAD RATING **

** SEE CHART FOR VEHICLE TYPE

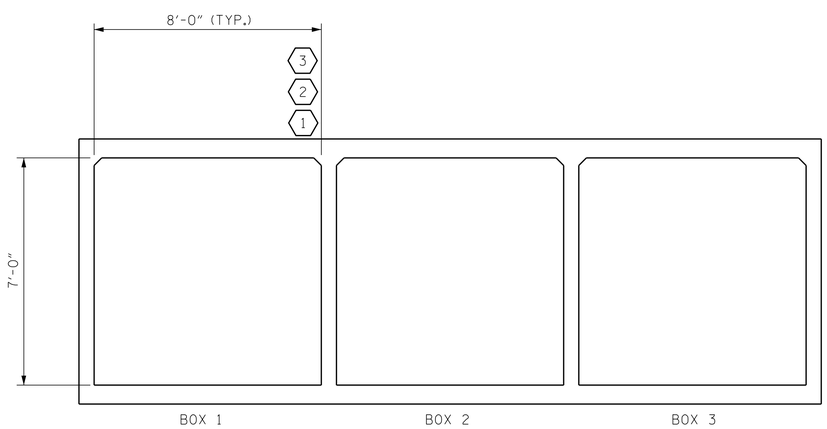

LRFR SUMMARY

(LOOKING DOWNSTREAM)

PROJECT NO. R-2582A

NORTHAMPTON COUNTY

STATION: 286+51.00 -L-

SHEET 2 OF 9

ENGINEER OF RECORD:

Brock Charles Hunt

NORTH CAROLINA PROFESSIONAL SEAL 14091 ENGINEER BROCK CHARLES HUNT

9/25/2018

WETHERILL ENGINEERING

1223 Jones Franklin Rd.
Raleigh, N.C. 27606
Bus: 919 851 8077
Fax: 919 851 8107
LICENSE NO. F-0377

DOCUMENT NOT CONSIDERED FINAL UNLESS ALL SIGNATURES COMPLETED

STATE OF NORTH CAROLINA
DEPARTMENT OF TRANSPORTATION
RALEIGH

STANDARD

LRFR SUMMARY FOR REINFORCED CONCRETE BOX CULVERTS
(NON-INTERSTATE TRAFFIC)

REVISIONS						SHEET NO.
NO.	BY:	DATE:	NO.	BY:	DATE:	C2-2
1			3			TOTAL SHEETS
2			4			9

STD. NO. LRFR5

ASSEMBLED BY : D. HODGE DATE : 6/18
CHECKED BY : B.C. HUNT DATE : 8/18

DRAWN BY : WMC 7/11 REV. 10/1/11 MAA/GM
CHECKED BY : GM 7/11 REV. 12/17 MAA/THC

9/25/2018
11:19:26 AM
P:\2018\18127.02 R-2582A\Structures\Site 5\DGN\STR5_R2582A_SMU_CU_650005.dgn

P:\2018\18127.02 R-2582A\Structures\Site 5\DGN\STR5_R2582A_SMU_CU_650005.dgn
9/25/2018 11:19:26 AM

DocuSign Envelope ID: 7821A7C2-BB88-407C-8FA6-8F90FBDEDF16

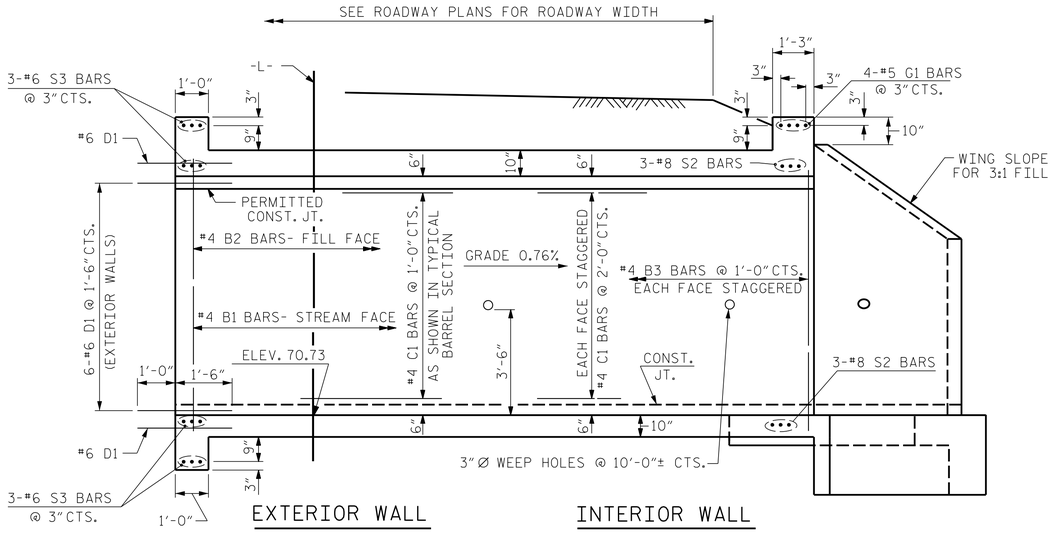

CULVERT SECTION NORMAL TO ROADWAY

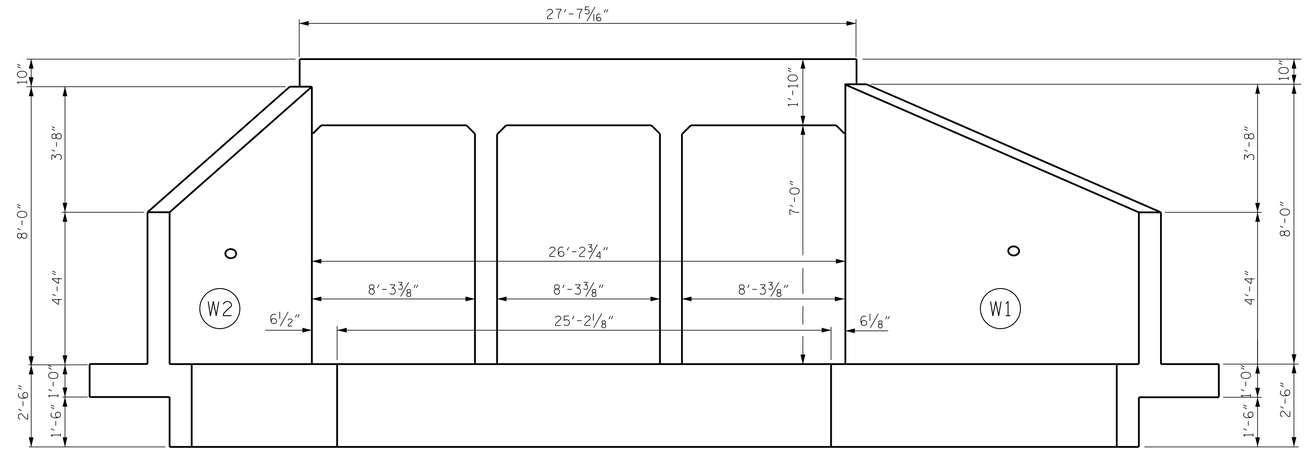

END ELEVATION NORMAL TO SKEW

(OUTLET END)

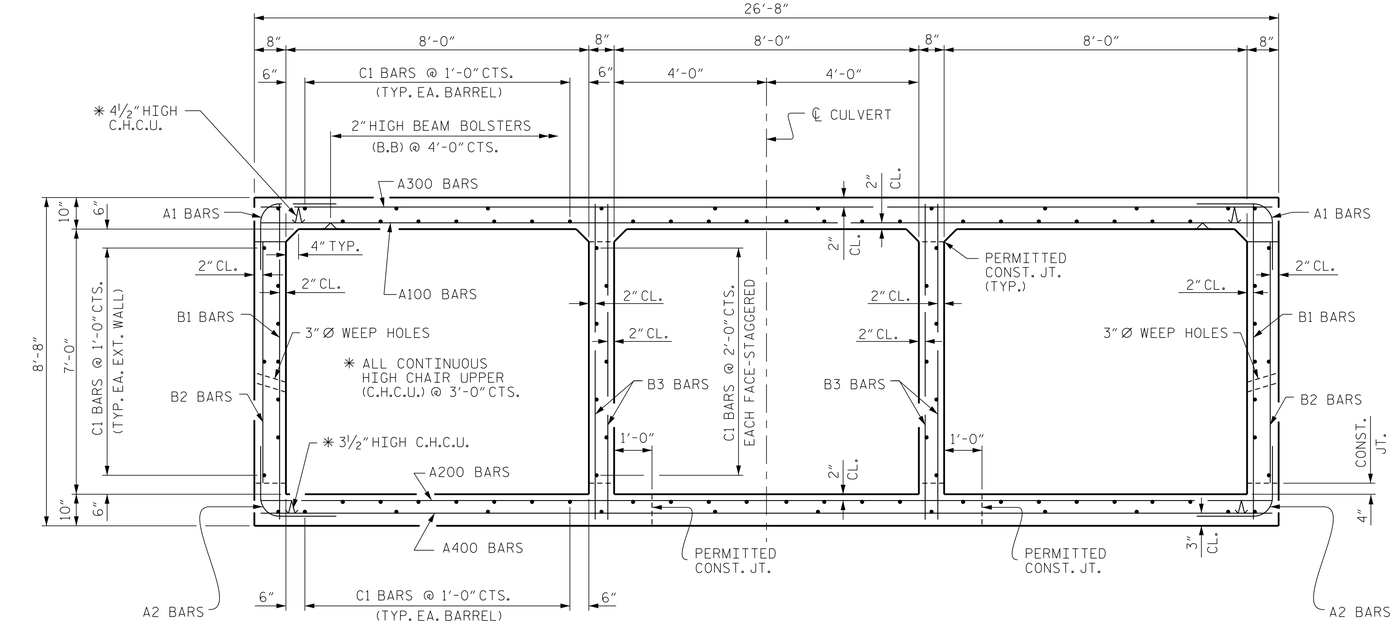

RIGHT ANGLE SECTION OF BARREL (STAGE I)

THERE ARE 98 C1 BARS IN SECTION OF BARREL

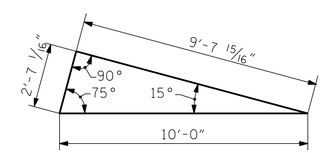

SKEW TRIANGLE

PROJECT NO. R-2582A

NORTHAMPTON COUNTY

STATION: 286+51.00 -L-

SHEET 3 OF 9

ENGINEER OF RECORD:

Developed by: Buck Charles Hunt

NORTH CAROLINA PROFESSIONAL SEAL 14091 ENGINEER BUCK CHARLES HUNT

9/25/2018

WETHERILL ENGINEERING

1223 Jones Franklin Rd.
Raleigh, N.C. 27606
Bus: 919 851 8077
Fax: 919 851 8107
LICENSE NO. F-0377

STATE OF NORTH CAROLINA
DEPARTMENT OF TRANSPORTATION
RALEIGH

BARREL STANDARD TRIPLE 8 FT. X 7 FT. CONCRETE BOX CULVERT (STAGE I)

REVISIONS						SHEET NO.
NO.	BY:	DATE:	NO.	BY:	DATE:	C2-3
1			3			TOTAL SHEETS
2			4			9

DOCUMENT NOT CONSIDERED FINAL UNLESS ALL SIGNATURES COMPLETED

ASSEMBLED BY : D. HODGE	DATE : 6/18	SPECIAL	
CHECKED BY : B.C. HUNT	DATE : 8/18		
DRAWN BY : R.F. HOLMES	DATE : NOV. 1971	STANDARD	
CHECKED BY : J.A. JOHNSON	DATE : NOV. 1971		

P:\2018\181270_2 R-2582A\Structure\CULVERT\R-2582A_CULVERT_650005.dgn
9/25/2018 1:19:42 AM
REVISED 11-13-18 BY A.W.; CHECKED BY R.W.W.
REVISED 3/28/12 BY E.L.F.; CHECKED BY R.W.W.
REDRAWN 10-16-89 BY R.W.W.; BY A.R.B.

DocuSign Envelope ID: 7821A7C2-BB88-407C-8FA6-8F90FBDEDF16

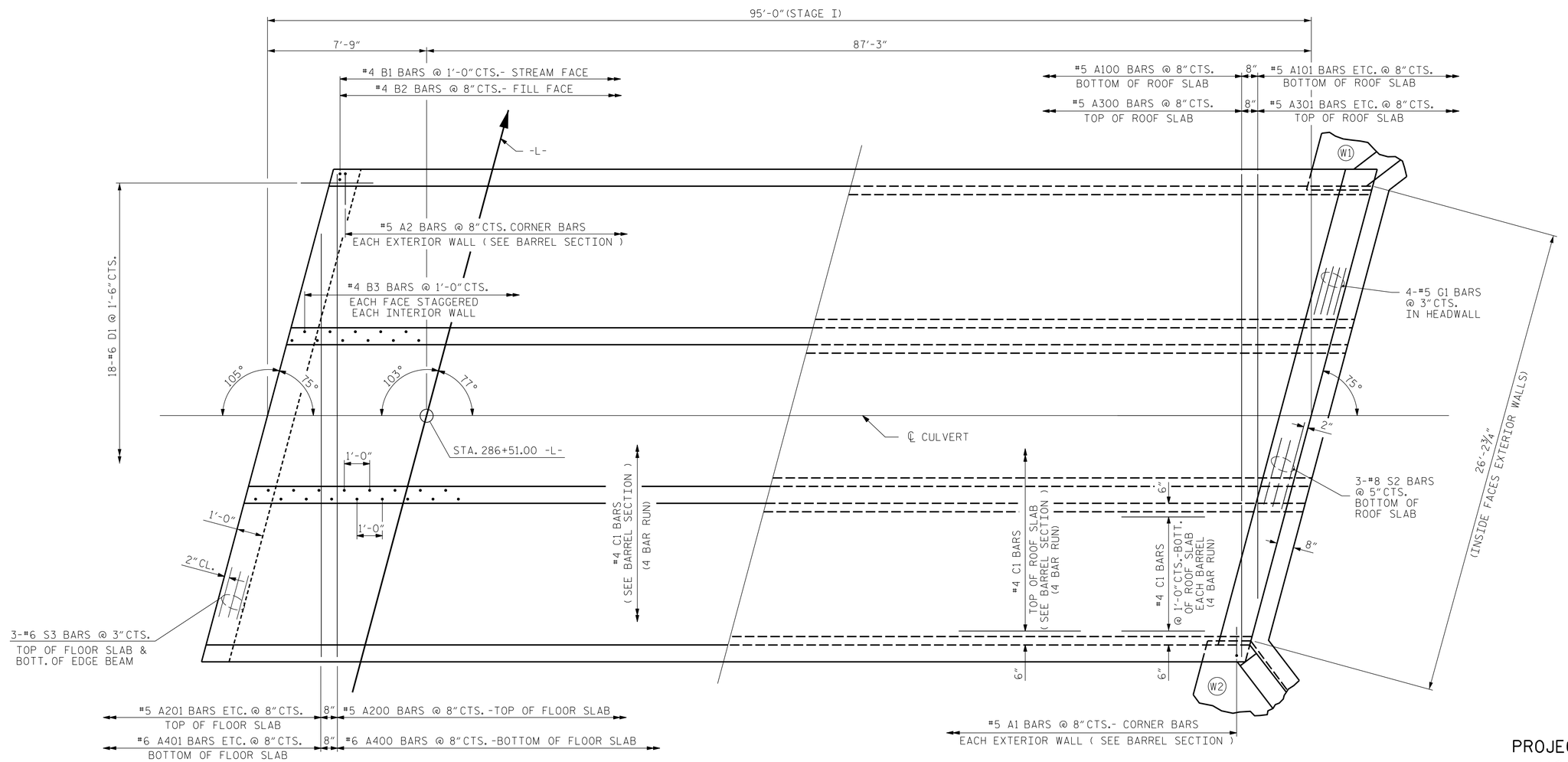

PART PLAN - FLOOR SLAB

PART PLAN - ROOF SLAB

PROJECT NO. R-2582A

NORTHAMPTON COUNTY

STATION: 286+51.00 -L-

SHEET 4 OF 9

ENGINEER OF RECORD:

Docusigned by: Buck Charles Hunt

NORTH CAROLINA PROFESSIONAL SEAL 14091 ENGINEER BUCK CHARLES HUNT

9/25/2018

WETHERILL ENGINEERING

1223 Jones Franklin Rd.
Raleigh, N.C. 27606
Bus: 919 851 8077
Fax: 919 851 8107
LICENSE NO. F-0377

STATE OF NORTH CAROLINA
DEPARTMENT OF TRANSPORTATION
RALEIGH

TRIPLE 8 FT. X 7 FT.
CONCRETE BOX CULVERT

(STAGE I)

REVISIONS						SHEET NO.
NO.	BY:	DATE:	NO.	BY:	DATE:	C2-4
1			3			TOTAL SHEETS
2			4			9

DRAWN BY : D. HODGE DATE : 6/18

CHECKED BY : B.C. HUNT DATE : 8/18

DOCUMENT NOT CONSIDERED FINAL UNLESS ALL SIGNATURES COMPLETED

P:\2018\18127.02_R-2582A\Structures\Site 5\DGN\STR5_R2582A_SMU_CU_650005.dgn
9/25/2018 11:19:56 AM

DocuSign Envelope ID: 7821A7C2-BB88-407C-8FA6-8F90FBDEDF16

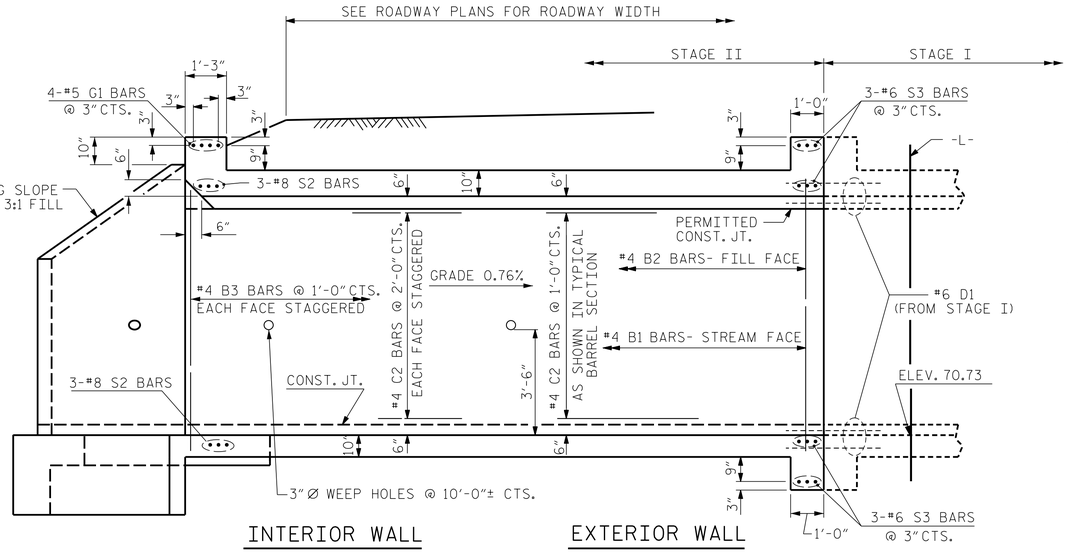

CULVERT SECTION NORMAL TO ROADWAY

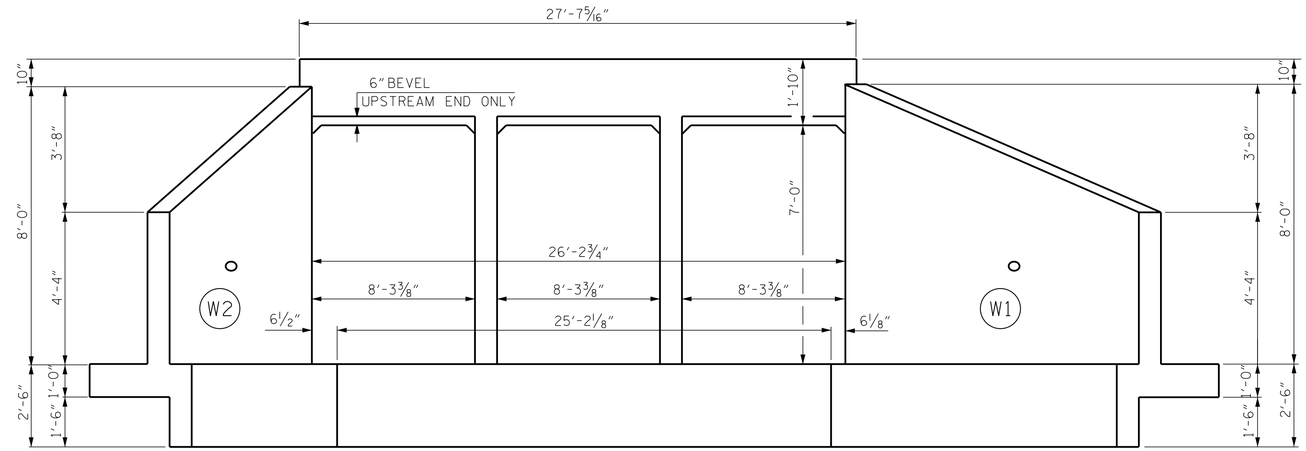

END ELEVATION NORMAL TO SKEW

(INLET END)

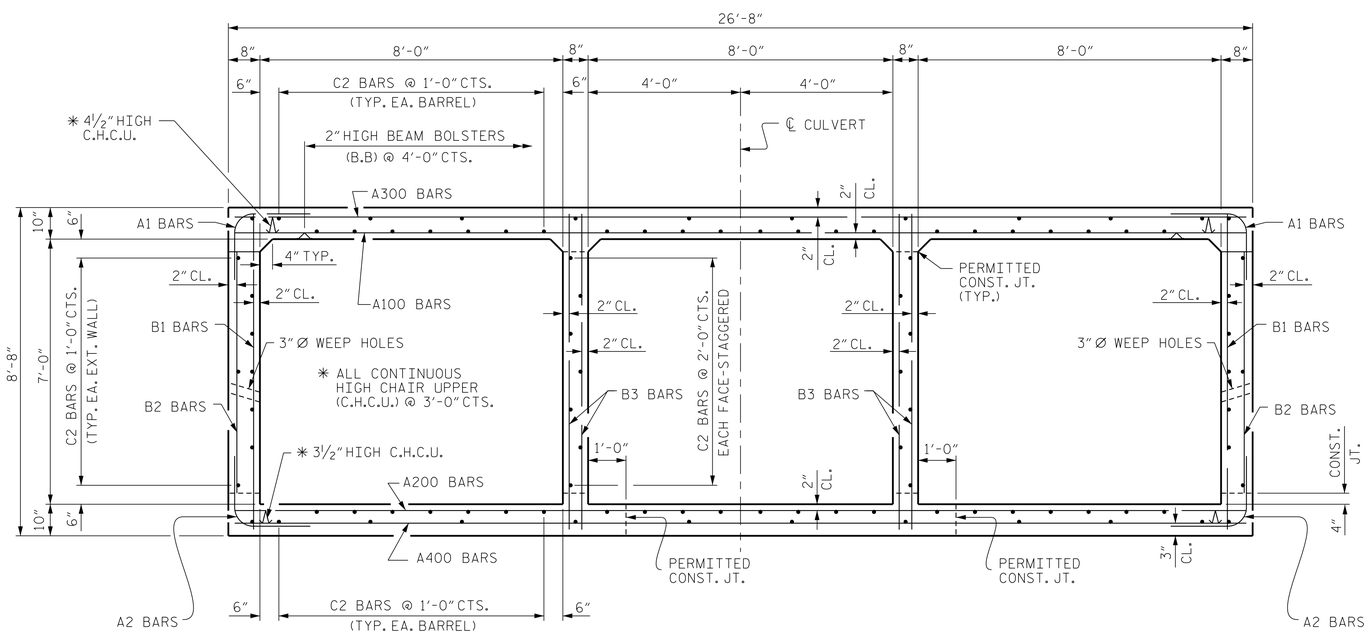

RIGHT ANGLE SECTION OF BARREL (STAGE II)

THERE ARE 98 C2 BARS IN SECTION OF BARREL

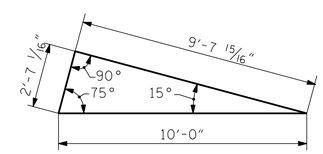

SKEW TRIANGLE

PROJECT NO. R-2582A

NORTHAMPTON COUNTY

STATION: 286+51.00 -L-

SHEET 5 OF 9

ENGINEER OF RECORD:

Brock Charles Hunt

NORTH CAROLINA PROFESSIONAL SEAL 14091 ENGINEER BROCK CHARLES HUNT

9/25/2018

WETHERILL ENGINEERING

1223 Jones Franklin Rd.
Raleigh, N.C. 27606
Bus: 919 851 8077
Fax: 919 851 8107
LICENSE NO. F-0377

STATE OF NORTH CAROLINA
DEPARTMENT OF TRANSPORTATION
RALEIGH

BARREL STANDARD
TRIPLE 8 FT. X 7 FT. CONCRETE BOX CULVERT
75° SKEW
(STAGE II)

REVISIONS							SHEET NO.
NO.	BY:	DATE:	NO.	BY:	DATE:		C2-5
1			3				TOTAL SHEETS
2			4				9

DOCUMENT NOT CONSIDERED FINAL UNLESS ALL SIGNATURES COMPLETED

ASSEMBLED BY : D. HODGE	DATE : 6/18	SPECIAL	
CHECKED BY : B.C. HUNT	DATE : 8/18		
DRAWN BY : R.F. HOLMES	DATE : NOV. 1971	STANDARD	
CHECKED BY : J.A. JOHNSON	DATE : NOV. 1971		

P:\2018\181270_2_R-2582A\Structure\Barrel\Barrel_Standard_CU_650005.dgn
9/25/2018 11:20:12 AM
REVISED 11-18-93 BY A.W.; CHECKED BY R.W.W.
REVISED 3/28/92 BY E.L.F.; CHECKED BY C.R.P.
REDRAWN 10-16-89 BY R.W.W.; CHECKED BY A.R.B.

DocuSign Envelope ID: 7821A7C2-BB88-407C-8FA6-8F90FBDEDF16

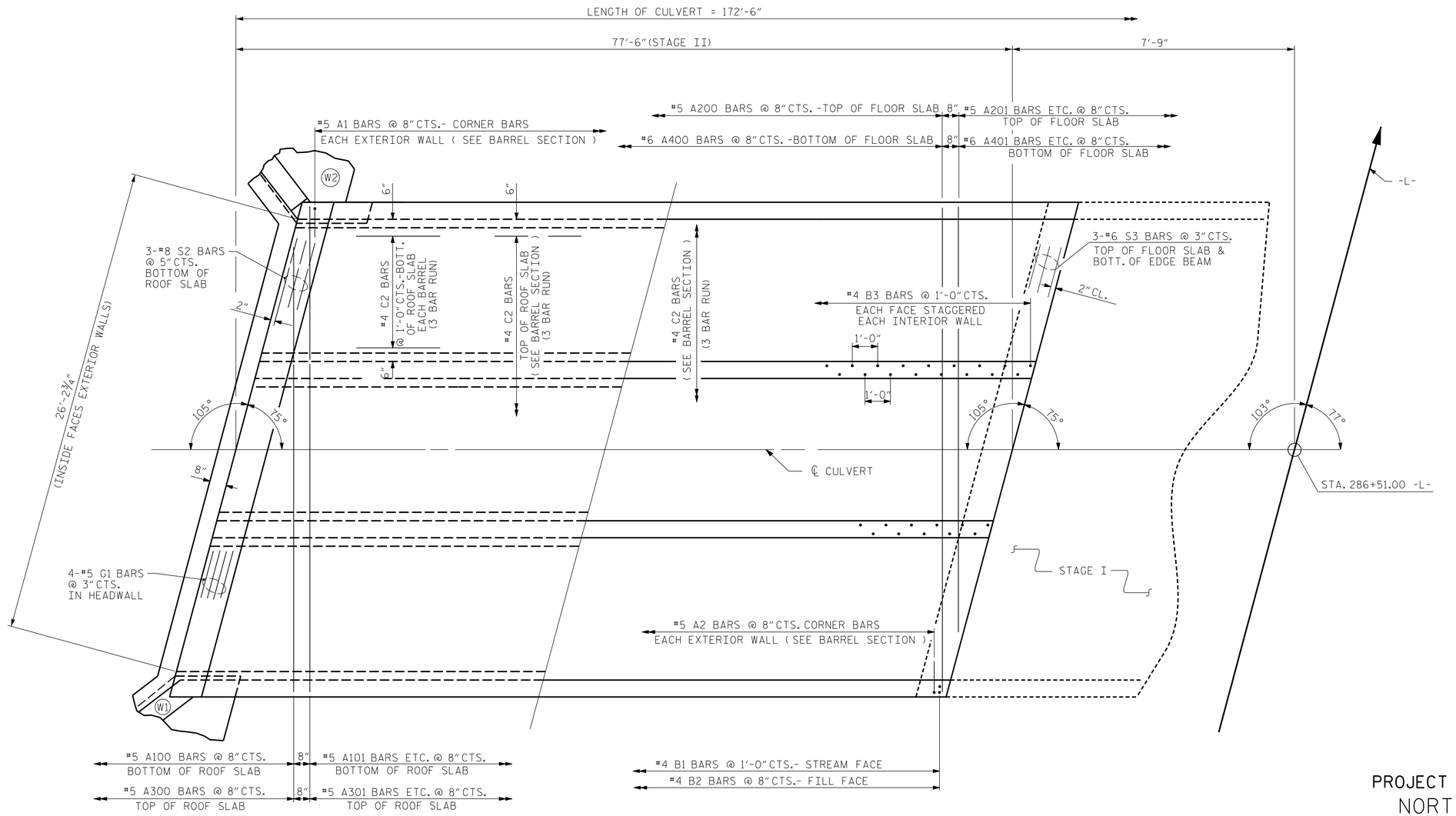

PART PLAN - ROOF SLAB

PART PLAN - FLOOR SLAB

PROJECT NO. R-2582A

NORTHAMPTON COUNTY

STATION: 286+51.00 -L-

SHEET 6 OF 9

ENGINEER OF RECORD:

Brock Charles Hunt

NORTH CAROLINA PROFESSIONAL SEAL 14091 ENGINEER BROCK CHARLES HUNT

9/25/2018

WETHERILL ENGINEERING

1223 Jones Franklin Rd.
Raleigh, N.C. 27606
Bus: 919 851 8077
Fax: 919 851 8107
LICENSE NO. F-0377

STATE OF NORTH CAROLINA
DEPARTMENT OF TRANSPORTATION
RALEIGH

TRIPLE 8 FT. X 7 FT.
CONCRETE BOX CULVERT

(STAGE II)

REVISIONS						SHEET NO.
NO.	BY:	DATE:	NO.	BY:	DATE:	C2-6
1			3			TOTAL SHEETS
2			4			9

DRAWN BY : D. HODGE DATE : 6/18

CHECKED BY : B.C. HUNT DATE : 8/18

DOCUMENT NOT CONSIDERED FINAL UNLESS ALL SIGNATURES COMPLETED

P:\2018\18127.02 R-2582A\Structures\Site 5\DGN\STR5_R2582A_SMU_CU_650005.dgn
9/25/2018 11:20:29 AM

DocuSign Envelope ID: 7821A7C2-BB88-407C-8FA6-8F90FBDEDF16

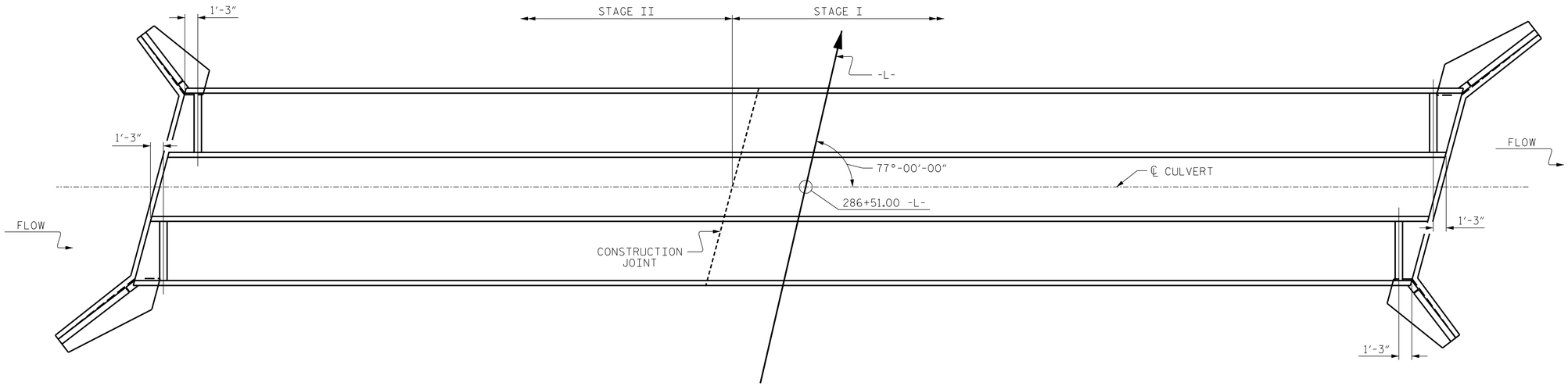

PLAN - SILL LOCATION

SHOWING PLACEMENT OF SILLS

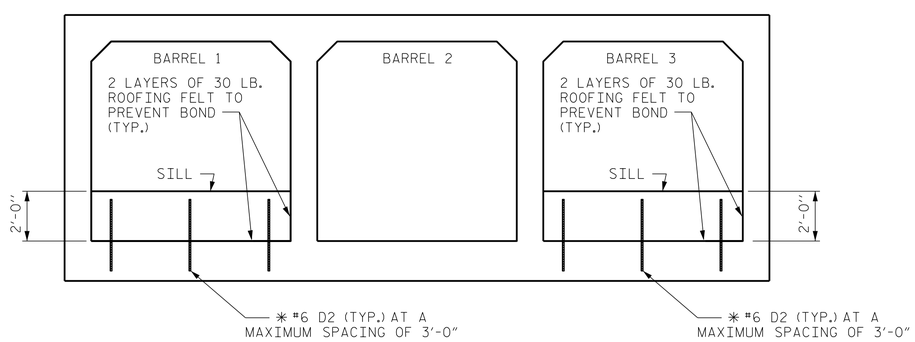

INLET ELEVATION

LOOKING DOWNSTREAM

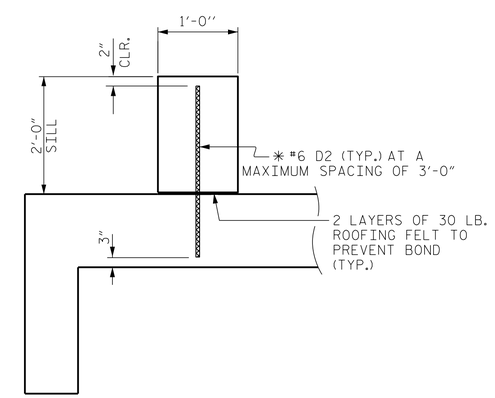

SECTION THROUGH SILL

* DOWELS MAY BE PUSHED INTO GREEN CONCRETE AFTER SLAB HAS BEEN FLOAT FINISHED.

CULVERT SILL DETAILS

PROJECT NO. R-2582A

NORTHAMPTON COUNTY

STATION: 286+51.00 -L-

SHEET 7 OF 9

ENGINEER OF RECORD:

Docusigned by: Buck Charles Hunt

NORTH CAROLINA PROFESSIONAL SEAL 14091 ENGINEER BUCK CHARLES HUNT

9/25/2018

WETHERILL ENGINEERING

1223 Jones Franklin Rd.
Raleigh, N.C. 27606
Bus: 919 851 8077
Fax: 919 851 8107
LICENSE NO. F-0377

STATE OF NORTH CAROLINA
DEPARTMENT OF TRANSPORTATION
RALEIGH

TRIPLE 8 FT. X 7 FT. CONCRETE BOX CULVERT 77° SKEW

REVISIONS						SHEET NO.
NO.	BY:	DATE:	NO.	BY:	DATE:	C2-7
1			3			TOTAL SHEETS
2			4			9

DOCUMENT NOT CONSIDERED FINAL UNLESS ALL SIGNATURES COMPLETED

DRAWN BY : D. HODGE DATE : 6/18
CHECKED BY : B.C. HUNT DATE : 8/18

P:\2018\18127.02_R-2582A\Structures\Site 5\DGN\STR5_R2582A_SMU_CU_650005.dgn
9/25/2018 11:20:46 AM

DocuSign Envelope ID: 7821A7C2-BB88-407C-8FA6-8F90FBDEDF16

BARREL REINFORCING STEEL

STAGE I

BAR	NO	SIZE	TYPE	LENGTH	WEIGHT	BAR	NO	SIZE	TYPE	LENGTH	WEIGHT
A1	282	5	1	5'-8"	1667	A400	132	6	STR	26'-4"	5221
A2	282	5	1	5'-7"	1642	A401	2	6	STR	24'-4"	73
						A402	2	6	STR	21'-10"	66
A100	132	5	STR	26'-4"	3625	A403	2	6	STR	19'-4"	58
A101	2	5	STR	24'-4"	51	A404	2	6	STR	16'-10"	51
A102	2	5	STR	21'-10"	46	A405	2	6	STR	14'-4"	43
A103	2	5	STR	19'-4"	40	A406	2	6	STR	11'-10"	36
A104	2	5	STR	16'-10"	35	A407	2	6	STR	9'-4"	28
A105	2	5	STR	14'-4"	30	A408	2	6	STR	6'-11"	21
A106	2	5	STR	11'-10"	25	A409	2	6	STR	4'-5"	13
A107	2	5	STR	9'-4"	19						
A108	2	5	STR	6'-11"	14	B1	192	4	STR	8'-3"	1058
A109	2	5	STR	4'-5"	9	B2	282	4	STR	6'-4"	1193
						B3	382	4	STR	8'-3"	2105
A200	132	5	STR	26'-4"	3625						
A201	2	5	STR	24'-4"	51	C1	392	4	STR	25'-2"	6590
A202	2	5	STR	21'-10"	46						
A203	2	5	STR	19'-4"	40	D1	48	6	STR	2'-6"	180
A204	2	5	STR	16'-10"	35	D2	6	6	STR	2'-5"	22
A205	2	5	STR	14'-4"	30						
A206	2	5	STR	11'-10"	25	G1	4	5	STR	27'-3"	114
A207	2	5	STR	9'-4"	19						
A208	2	5	STR	6'-11"	14	S2	6	8	STR	27'-3"	437
A209	2	5	STR	4'-5"	9	S3	12	6	STR	27'-3"	491
A300	132	5	STR	26'-4"	3625						
A301	2	5	STR	24'-4"	51						
A302	2	5	STR	21'-10"	46						
A303	2	5	STR	19'-4"	40						
A304	2	5	STR	16'-10"	35						
A305	2	5	STR	14'-4"	30						
A306	2	5	STR	11'-10"	25						
A307	2	5	STR	9'-4"	19						
A308	2	5	STR	6'-11"	14						
A309	2	5	STR	4'-5"	9						
						REINFORCING STEEL					32,791 LBS

STAGE II

BAR	NO	SIZE	TYPE	LENGTH	WEIGHT	BAR	NO	SIZE	TYPE	LENGTH	WEIGHT
A1	230	5	1	5'-8"	1359	A400	106	6	STR	26'-4"	4193
A2	230	5	1	5'-7"	1339	A401	2	6	STR	24'-4"	73
						A402	2	6	STR	21'-10"	66
A100	106	5	STR	26'-4"	2911	A403	2	6	STR	19'-4"	58
A101	2	5	STR	24'-4"	51	A404	2	6	STR	16'-10"	51
A102	2	5	STR	21'-10"	46	A405	2	6	STR	14'-4"	43
A103	2	5	STR	19'-4"	40	A406	2	6	STR	11'-10"	36
A104	2	5	STR	16'-10"	35	A407	2	6	STR	9'-4"	28
A105	2	5	STR	14'-4"	30	A408	2	6	STR	6'-11"	21
A106	2	5	STR	11'-10"	25	A409	2	6	STR	4'-5"	13
A107	2	5	STR	9'-4"	19						
A108	2	5	STR	6'-11"	14	B1	156	4	STR	8'-3"	860
A109	2	5	STR	4'-5"	9	B2	230	4	STR	6'-4"	973
						B3	310	4	STR	8'-3"	1708
A200	106	5	STR	26'-4"	2911						
A201	2	5	STR	24'-4"	51	C2	294	4	STR	27'-0"	5303
A202	2	5	STR	21'-10"	46						
A203	2	5	STR	19'-4"	40	D2	6	6	STR	2'-5"	22
A204	2	5	STR	16'-10"	35						
A205	2	5	STR	14'-4"	30	G1	4	5	STR	27'-3"	114
A206	2	5	STR	11'-10"	25						
A207	2	5	STR	9'-4"	19	S2	6	8	STR	27'-3"	437
A208	2	5	STR	6'-11"	14	S3	12	6	STR	27'-3"	491
A209	2	5	STR	4'-5"	9						
A300	106	5	STR	26'-4"	2911						
A301	2	5	STR	24'-4"	51						
A302	2	5	STR	21'-10"	46						
A303	2	5	STR	19'-4"	40						
A304	2	5	STR	16'-10"	35						
A305	2	5	STR	14'-4"	30						
A306	2	5	STR	11'-10"	25						
A307	2	5	STR	9'-4"	19						
A308	2	5	STR	6'-11"	14						
A309	2	5	STR	4'-5"	9						
						REINFORCING STEEL					26,728 LBS

SPLICE LENGTHS CHART

BAR	SIZE	SPLICE LENGTH
A200	#5	2'-2"
A400	#6	2'-9"
"B"	#4	1'-9"
"C"	#4	1'-11"

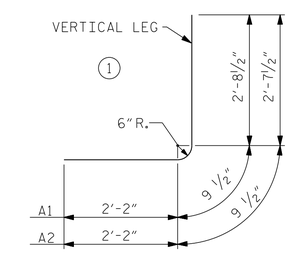

BAR TYPE

BAR DIMENSIONS ARE OUT TO OUT

PROJECT NO. R-2582A

NORTHAMPTON COUNTY

STATION: 286+51.00 -L-

SHEET 8 OF 9

ENGINEER OF RECORD:

DocuSigned by: Buck Charles Hunt

NORTH CAROLINA PROFESSIONAL SEAL 14091 ENGINEER BUCK CHARLES HUNT

9/25/2018

WETHERILL ENGINEERING

1223 Jones Franklin Rd.
Raleigh, N.C. 27606
Bus: 919 851 8077
Fax: 919 851 8107
LICENSE NO. F-0377

STATE OF NORTH CAROLINA
DEPARTMENT OF TRANSPORTATION
RALEIGH

TRIPLE 8 FT. X 7 FT. CONCRETE BOX CULVERT

REVISIONS						SHEET NO.
NO.	BY:	DATE:	NO.	BY:	DATE:	C2-8
1			3			TOTAL SHEETS
2			4			9

DRAWN BY : D. HODGE DATE : 7/18

CHECKED BY : B.C. HUNT DATE : 8/18

DOCUMENT NOT CONSIDERED FINAL UNLESS ALL SIGNATURES COMPLETED

P:\2018\18127.02 R-2582A\Structures\Site 5\DGN\STR5_R2582A_SMU_CU_650005.dgn
9/25/2018 11:21:03 AM

DocuSign Envelope ID: 7821A7C2-BB88-407C-8FA6-8F90FBDEDF16

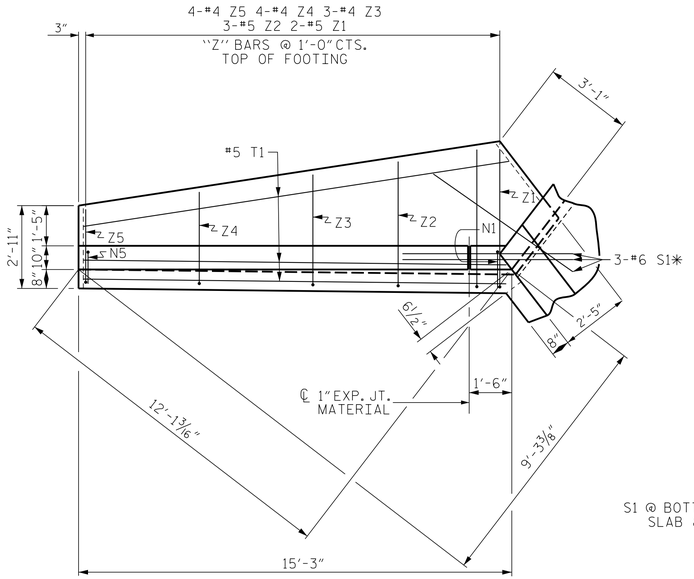

PLAN W2

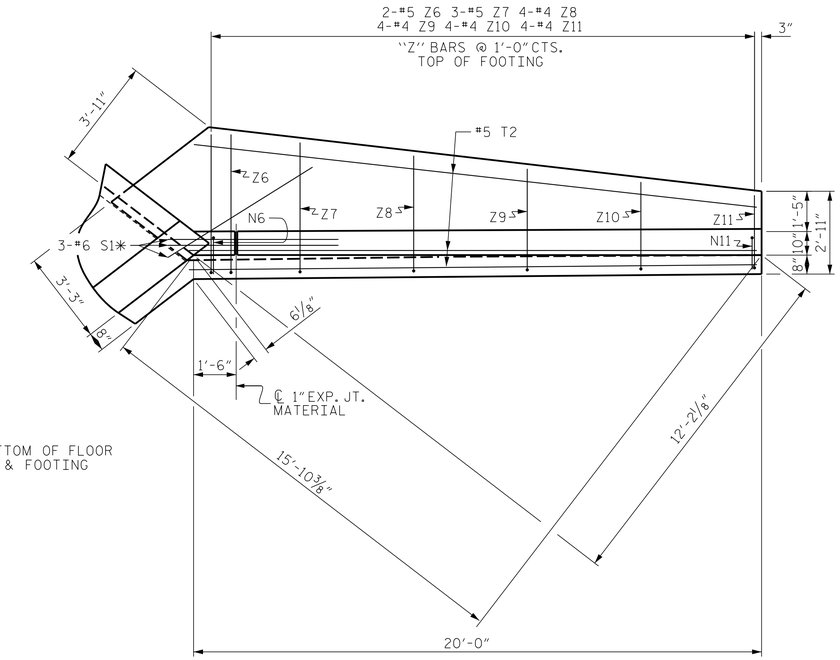

S1 @ BOTTOM OF FLOOR
SLAB & FOOTING

PLAN W1

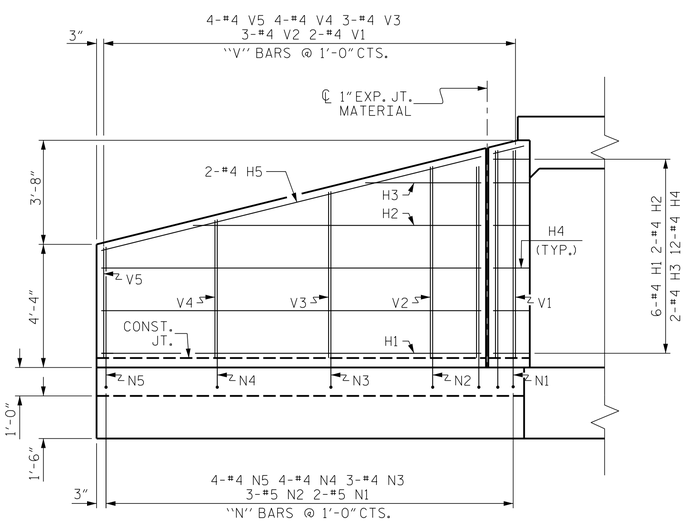

ELEVATION W2

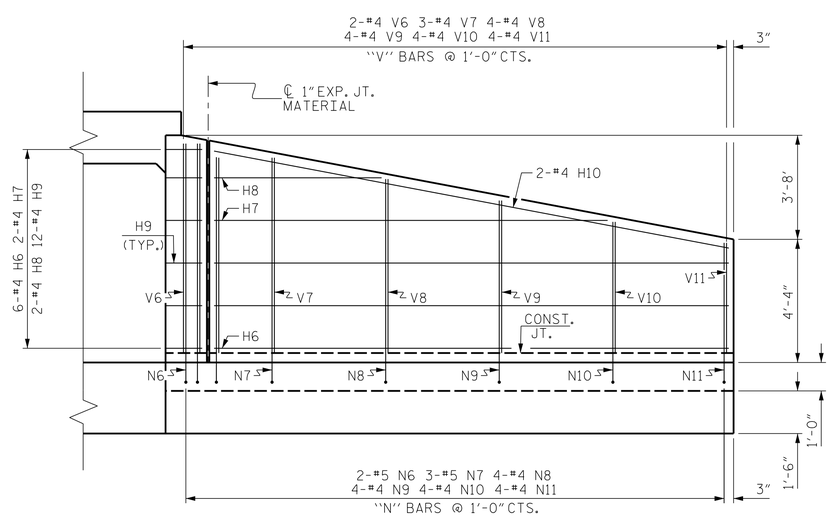

ELEVATION W1

BAR TYPES

ALL BAR DIMENSIONS ARE OUT TO OUT.

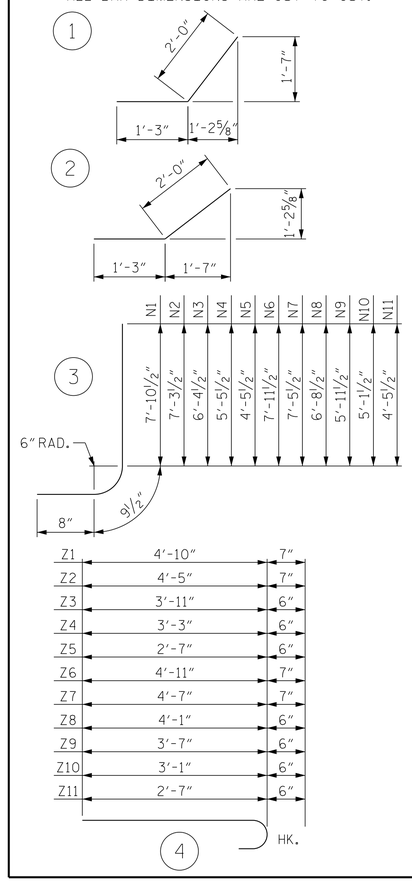

BILL OF MATERIAL

BAR	NO.	SIZE	TYPE	LENGTH	WEIGHT
H1	12	#4	STR	13'-4"	107
H2	4	#4	STR	10'-1"	27
H3	4	#4	STR	4'-1"	11
H4	24	#4	1	3'-3"	52
H5	4	#4	STR	13'-9"	37
H6	12	#4	STR	18'-1"	145
H7	4	#4	STR	13'-10"	37
H8	4	#4	STR	5'-10"	16
H9	24	#4	2	3'-3"	52
H10	4	#4	STR	18'-5"	49
N1	4	#5	3	9'-4"	39
N2	6	#5	3	8'-9"	55
N3	6	#4	3	7'-10"	31
N4	8	#4	3	6'-11"	37
N5	8	#4	3	5'-11"	32
N6	4	#5	3	9'-5"	39
N7	6	#5	3	8'-11"	56
N8	8	#4	3	8'-2"	44
N9	8	#4	3	7'-5"	40
N10	8	#4	3	6'-7"	35
N11	8	#4	3	5'-11"	32
S1	12	#6	STR	6'-0"	108
T1	6	#5	STR	15'-3"	95
T2	6	#5	STR	20'-0"	125
V1	4	#4	STR	7'-3"	19
V2	6	#4	STR	6'-8"	27
V3	6	#4	STR	5'-10"	23
V4	8	#4	STR	4'-10"	26
V5	8	#4	STR	3'-10"	20
V6	4	#4	STR	7'-4"	20
V7	6	#4	STR	6'-10"	27
V8	8	#4	STR	6'-1"	33
V9	8	#4	STR	5'-4"	29
V10	8	#4	STR	4'-7"	24
V11	8	#4	STR	3'-10"	20
Z1	4	#5	4	5'-5"	23
Z2	6	#5	4	5'-0"	31
Z3	6	#4	4	4'-5"	18
Z4	8	#4	4	3'-9"	20
Z5	8	#4	4	3'-1"	16
Z6	4	#5	4	5'-6"	23
Z7	6	#5	4	5'-2"	32
Z8	8	#4	4	4'-7"	24
Z9	8	#4	4	4'-1"	22
Z10	8	#4	4	3'-7"	19
Z11	8	#4	4	3'-1"	16
REINFORCING STEEL FOR 4 WINGS					1,813 LBS
CLASS A CONCRETE FOR 4 WINGS					28.0 CY

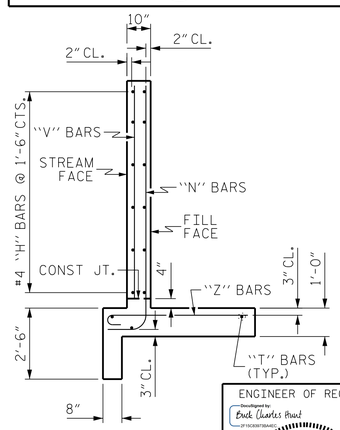

TYPICAL WING
SECTION

PROJECT NO. R-2582A
NORTHAMPTON COUNTY
STATION: 286+51.00 -L-

SHEET 9 OF 9

ENGINEER OF RECORD:
Brock Charles Hunt
NORTH CAROLINA PROFESSIONAL SEAL 14091 ENGINEER BROCK CHARLES HUNT
9/25/2018

WETHERILL ENGINEERING
1223 Jones Franklin Rd.
Raleigh, N.C. 27606
Bus: 919 851 8077
Fax: 919 851 8107
LICENSE NO. F-0377

STATE OF NORTH CAROLINA
DEPARTMENT OF TRANSPORTATION
RALEIGH

WINGS FOR CONCRETE BOX CULVERT

H = 7'-0" SLOPE = 3:1
75° SKEW

REVISIONS						SHEET NO.
NO.	BY:	DATE:	NO.	BY:	DATE:	C2-9
1			3			TOTAL SHEETS
2			4			9

DRAWN BY : D. HODGE DATE : 7/18
CHECKED BY : B.C. HUNT DATE : 8/18

DOCUMENT NOT CONSIDERED FINAL
UNLESS ALL SIGNATURES COMPLETED

DocuSign Envelope ID: A3C2DB2C-DC39-41CC-A49C-63EA85A734C6

STANDARD NOTES

DESIGN DATA:

SPECIFICATIONS	A.A.S.H.T.O. (CURRENT)
LIVE LOAD	SEE PLANS
IMPACT ALLOWANCE	SEE A.A.S.H.T.O.
STRESS IN EXTREME FIBER OF STRUCTURAL STEEL - AASHTO M270 GRADE 36	20,000 LBS. PER SQ. IN.
- AASHTO M270 GRADE 50W	27,000 LBS. PER SQ. IN.
- AASHTO M270 GRADE 50	27,000 LBS. PER SQ. IN.
REINFORCING STEEL IN TENSION - GRADE 60	24,000 LBS. PER SQ. IN.
CONCRETE IN COMPRESSION	1,200 LBS. PER SQ. IN.
CONCRETE IN SHEAR	SEE A.A.S.H.T.O.
STRUCTURAL TIMBER - TREATED OR UNTREATED EXTREME FIBER STRESS	1,800 LBS. PER SQ. IN.
COMPRESSION PERPENDICULAR TO GRAIN OF TIMBER	375 LBS. PER SQ. IN.
EQUIVALENT FLUID PRESSURE OF EARTH	30 LBS. PER CU. FT. (MINIMUM)

MATERIAL AND WORKMANSHIP:

EXCEPT AS MAY OTHERWISE BE SPECIFIED ON PLANS OR IN THE SPECIAL PROVISIONS, ALL MATERIAL AND WORKMANSHIP SHALL BE IN ACCORDANCE WITH THE 2018 "STANDARD SPECIFICATIONS FOR ROADS AND STRUCTURES" OF THE N. C. DEPARTMENT OF TRANSPORTATION.

STEEL SHEET PILING FOR PERMANENT OR TEMPORARY APPLICATIONS SHALL BE HOT ROLLED.

CONCRETE:

UNLESS OTHERWISE REQUIRED ON PLANS, CLASS A CONCRETE SHALL BE USED FOR ALL PORTIONS OF ALL STRUCTURES WITH THE EXCEPTION THAT: CLASS AA CONCRETE SHALL BE USED IN BRIDGE SUPERSTRUCTURES, ABUTMENT BACKWALLS, AND APPROACH SLABS; AND CLASS B CONCRETE SHALL BE USED FOR SLOPE PROTECTION AND RIP RAP.

CONCRETE CHAMFERS:

UNLESS OTHERWISE NOTED ON THE PLANS, ALL EXPOSED CORNERS ON STRUCTURES SHALL BE CHAMFERED ¾" WITH THE FOLLOWING EXCEPTIONS: TOP CORNERS OF CURBS MAY BE ROUNDED TO 1½" RADIUS WHICH IS BUILT INTO CURB FORMS; CORNERS OF TRANSVERSE FLOOR EXPANSION JOINTS SHALL BE ROUNDED WITH A ¼" FINISHING TOOL UNLESS OTHERWISE REQUIRED ON PLANS; AND CORNERS OF EXPANSION JOINTS IN THE ROADWAY FACES AND TOPS OF CURBS AND SIDEWALKS SHALL BE ROUNDED TO A ¼" RADIUS WITH A FINISHING STONE OR TOOL UNLESS OTHERWISE REQUIRED ON PLANS.

DOWELS:

DOWELS WHEN INDICATED ON PLANS AS FOR CULVERT EXTENSIONS, SHALL BE EMBEDDED AT LEAST 12" INTO THE OLD CONCRETE AND GROUTED INTO PLACE WITH 1:2 CEMENT MORTAR.

ALLOWANCE FOR DEAD LOAD DEFLECTION, SETTLEMENT, ETC. IN CASTING SUPERSTRUCTURES:

BRIDGES SHALL BE BUILT ON THE GRADE OR VERTICAL CURVE SHOWN ON PLANS. SLABS, CURBS AND PARAPETS SHALL CONFORM TO THE GRADE OR CURVE.

ALL DIMENSIONS WHICH ARE GIVEN IN SECTION AND ARE AFFECTED BY DEAD LOAD DEFLECTIONS ARE DIMENSIONS AT CENTER LINE OF BEARING UNLESS OTHERWISE NOTED ON PLANS. IN SETTING FORMS FOR STEEL BEAM BRIDGES AND PRESTRESSED CONCRETE GIRDER BRIDGES, ADJUSTMENTS SHALL BE MADE DUE TO THE DEAD LOAD DEFLECTIONS FOR THE ELEVATIONS SHOWN. WHERE BLOCKS ARE SHOWN OVER BEAMS FOR BUILDING UP TO THE SLAB, THE VERTICAL DIMENSIONS OF THE BLOCKS SHALL BE ADJUSTED BETWEEN BEARINGS TO COMPENSATE FOR DEAD LOAD DEFLECTIONS, VERTICAL CURVE ORDINATE, AND ACTUAL BEAM CAMBER. WHERE BOTTOM OF SLAB IS IN LINE WITH BOTTOM OF TOP FLANGES, DEPTH OF SLAB BETWEEN BEARINGS SHALL BE ADJUSTED TO COMPENSATE FOR DEAD LOAD DEFLECTION, VERTICAL CURVE ORDINATE, AND ACTUAL BEAM CAMBER.

IN SETTING FALSEWORK AND FORMS FOR REINFORCED CONCRETE SPANS, AN ALLOWANCE SHALL BE MADE FOR DEAD LOAD DEFLECTIONS, SETTLEMENT OF FALSEWORK, AND PERMANENT CAMBER WHICH SHALL BE PROVIDED FOR IN ADDITION TO THE ELEVATIONS SHOWN. AFTER REMOVAL OF THE FALSEWORK, THE FINISHED STRUCTURES SHALL CONFORM TO THE PROFILE AND ELEVATIONS SHOWN ON THE PLANS AND CONSTRUCTION ELEVATIONS FURNISHED BY THE ENGINEER.

DETAILED DRAWINGS FOR FALSEWORK OR FORMS FOR BRIDGE SUPERSTRUCTURE AND ANY STRUCTURE OR PARTS OF A STRUCTURE AS NOTED ON THE PLANS SHALL BE SUBMITTED TO THE ENGINEER FOR APPROVAL BEFORE CONSTRUCTION OF THE FALSEWORK OR FORMS IS STARTED.

REINFORCING STEEL:

ALL REINFORCING STEEL SHALL BE DEFORMED. DIMENSIONS RELATIVE TO PLACEMENT OF REINFORCING ARE TO CENTERS OF BARS UNLESS OTHERWISE INDICATED IN THE PLANS. DIMENSIONS ON BAR DETAILS ARE TO CENTERS OF BARS OR ARE OUT TO OUT AS INDICATED ON PLANS.

WIRE BAR SUPPORTS SHALL BE PROVIDED FOR REINFORCING STEEL WHERE INDICATED ON THE PLANS. WHEN BAR SUPPORT PIECES ARE PLACED IN CONTINUOUS LINES, THEY SHALL BE SO PLACED THAT THE ENDS OF THE SUPPORTING WIRES SHALL BE LAPPED TO LOCK LEGS ON ADJOINING PIECES.

STRUCTURAL STEEL:

AT THE CONTRACTOR'S OPTION, HE MAY SUBSTITUTE ⅞" Ø SHEAR STUDS FOR THE ¾" Ø STUDS SPECIFIED ON THE PLANS. THIS SUBSTITUTION SHALL BE MADE AT THE RATE OF 3 - ⅞" Ø STUDS FOR 4 - ¾" Ø STUDS, AND STUD SPACING CHANGES SHALL BE MADE AS NECESSARY TO PROVIDE THE SAME EQUIVALENT NUMBER OF ⅞" Ø STUDS ALONG THE BEAM AS SHOWN FOR ¾" Ø STUDS BASED ON THE RATIO OF 3 - ⅞" Ø STUDS FOR 4 - ¾" Ø STUDS. STUDS OF THE LENGTH SPECIFIED ON THE PLANS MUST BE PROVIDED. THE MAXIMUM SPACING SHALL BE 2'-0".

EXCEPT AT THE INTERIOR SUPPORTS OF CONTINUOUS BEAMS WHERE THE COVER PLATE IS IN CONTACT WITH BEARING PLATE, THE CONTRACTOR MAY, AT HIS OPTION, SUBSTITUTE FOR THE COVER PLATES DESIGNATED ON THE PLANS COVER PLATES OF THE EQUIVALENT AREA PROVIDED THESE PLATES ARE AT LEAST 5/16" IN THICKNESS AND DO NOT EXCEED A WIDTH EQUAL TO THE FLANGE WIDTH LESS 2" OR A THICKNESS EQUAL TO 2 TIMES THE FLANGE THICKNESS. THE SIZE OF FILLET WELDS SHALL CONFORM TO THE REQUIREMENTS OF THE CURRENT ANSI/AASHTO/AWS "BRIDGE WELDING CODE". ELECTROSLAG WELDING WILL NOT BE PERMITTED.

WITH THE SOLE EXCEPTION OF EDGES AT SURFACES WHICH BEAR ON OTHER SURFACES, ALL SHARP EDGES AND ENDS OF SHAPES AND PLATES SHALL BE SLIGHTLY ROUNDED BY SUITABLE MEANS TO A RADIUS OF APPROXIMATELY 1/16 INCH OR EQUIVALENT FLAT SURFACE AT A SUITABLE ANGLE PRIOR TO PAINTING, GALVANIZING, OR METALLIZING.

HANDRAILS AND POSTS:

METAL STANDARDS AND FACES OF THE CONCRETE END POSTS FOR THE METAL RAIL SHALL BE SET NORMAL TO THE GRADE OF THE CURB, UNLESS OTHERWISE SHOWN ON PLANS. THE METAL RAIL AND TOPS OF CONCRETE POSTS USED WITH THE ALUMINUM RAIL SHALL BE BUILT PARALLEL TO THE GRADE OF THE CURB.

METAL HANDRAILS SHALL BE IN ACCORDANCE WITH THE PLANS. RAILS SHALL BE AS MANUFACTURED FOR BRIDGE RAILING. CASTINGS SHALL BE OF A UNIFORM APPEARANCE. FINS AND OTHER DEFORMATIONS RESULTING FROM CASTING OR OTHERWISE SHALL BE REMOVED IN A MANNER SO THAT A UNIFORM COLORING OF THE COMPLETED CASTING SHALL BE OBTAINED. CASTINGS WITH DISCOLORATIONS OR OF NON-UNIFORM COLORING WILL NOT BE ACCEPTED. CERTIFIED MILL REPORTS ARE REQUIRED FOR METAL RAILS AND POSTS.

SPECIAL NOTES:

GENERALLY, IN CASE OF DISCREPANCY, THIS STANDARD SHEET OF NOTES SHALL GOVERN OVER THE SPECIFICATIONS, BUT THE REMAINDER OF THE PLANS SHALL GOVERN OVER NOTES HEREON, AND SPECIAL PROVISIONS SHALL GOVERN OVER ALL. SEE SPECIFICATIONS ARTICLE 105-4.

ENGLISH

JANUARY, 1990