This electronic collection of documents is provided for the convenience of the user and is Not a Certified Document –

The documents contained herein were originally issued and sealed by the individuals whose names and license numbers appear on each page, on the dates appearing with their signature on that page.
This file or an individual page shall not be considered a certified document.

09/08/99

TIP PROJECT: R-2582A

CONTRACT: C204210

STATE OF NORTH CAROLINA
DIVISION OF HIGHWAYS

STATE	STATE PROJECT REFERENCE NO.	SHEET NO.	TOTAL SHEETS
N.C.	R-2582A		

STATE PROJ. NO.	F.A. PROJ. NO.	DESCRIPTION
34472.1.4		PE
34472.2.4		R/W, UTIL.
34472.2.4		CONST.

NORTHAMPTON COUNTY

LOCATION: US 158 FROM I-95/NC 46 IN ROANOKE RAPIDS TO SR 1312 (ST. JOHN CHURCH RD)

TYPE OF WORK: GRADING, DRAINAGE, PAVING, RESURFACING, GUARDRAIL, SIGNALS AND STRUCTURES.

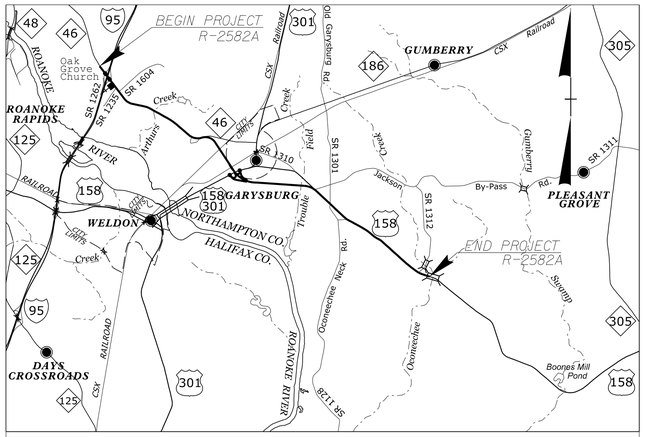

VICINITY MAP

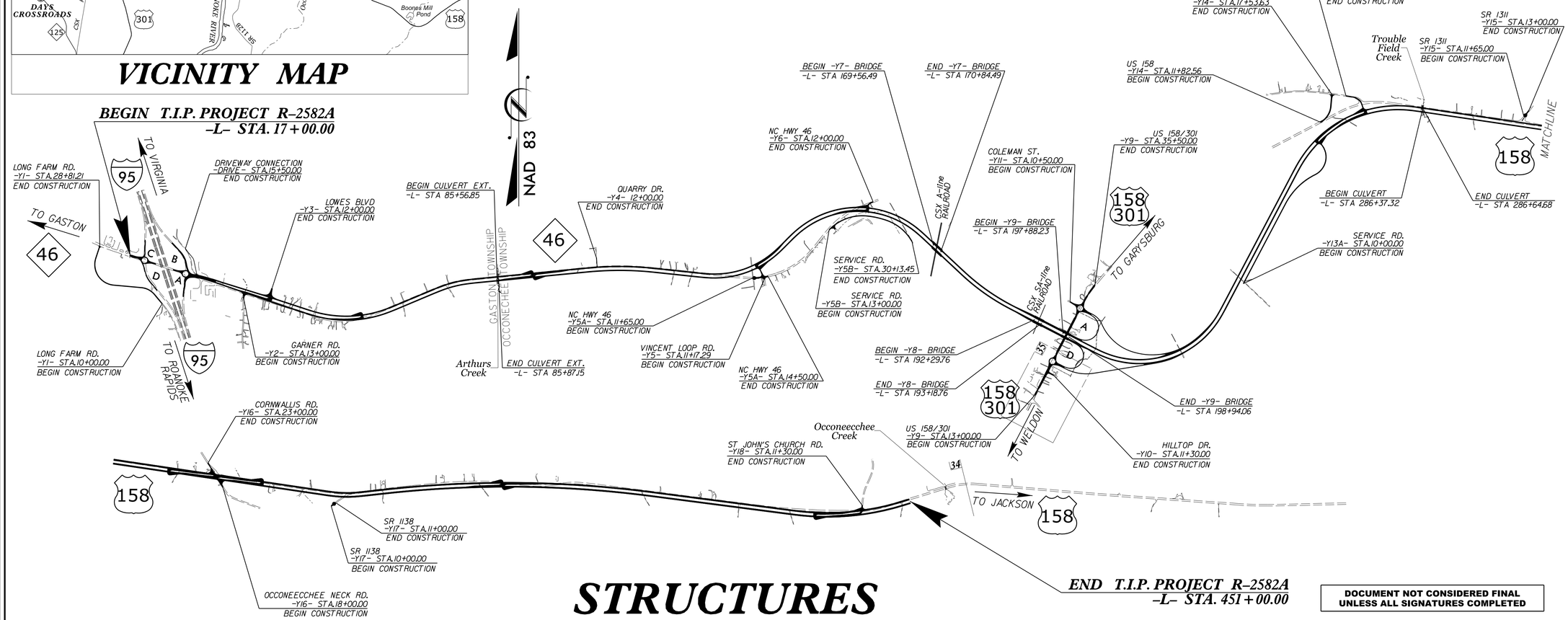

STRUCTURES

DOCUMENT NOT CONSIDERED FINAL UNLESS ALL SIGNATURES COMPLETED

DESIGN DATA

ADT 2017 = 6200
ADT 2037 = 8200
DHV = 11 %
D = 60 %
T = 21 % *
V = 70 MPH
* TTST = 14 DUAL = 7
FUNC CLASS = EXPRESSWAY / FREEWAY
STATEWIDE TIER

PROJECT LENGTH

LENGTH ROADWAY T.I.P. PROJECT R-2582A = 8.149 MILES

LENGTH STRUCTURE T.I.P. PROJECT R-2582A = 0.098 MILES

TOTAL LENGTH OF T.I.P. PROJECT R-2582A = 8.220 MILES

Prepared in the Office of:
WETHERILL ENGINEERING
1223 Jones Franklin Rd. Raleigh, N.C. 27606
License No. F-0377
Bus: 919.851.8077 Fax: 919.851.8107

2018 STANDARD SPECIFICATIONS

LETTING DATE:
July 16, 2019

Prepared for:
DIVISION OF HIGHWAYS
1000 Birch Ridge Dr., Raleigh NC, 27610

EDWARD G. WETHERILL, P.E.
PROJECT ENGINEER

GREG GILLAND, P.E.
PROJECT DESIGN ENGINEER

STATE OF NORTH CAROLINA DEPARTMENT OF TRANSPORTATION

5/17/2019
7:19:01 AM
P:\2018\18127.02 R-2582A\Structures\R2582A_SMU_TSH.dgn

DocuSign Envelope ID: 7554F43B-51A1-4C68-9A41-7FB1BD88385F

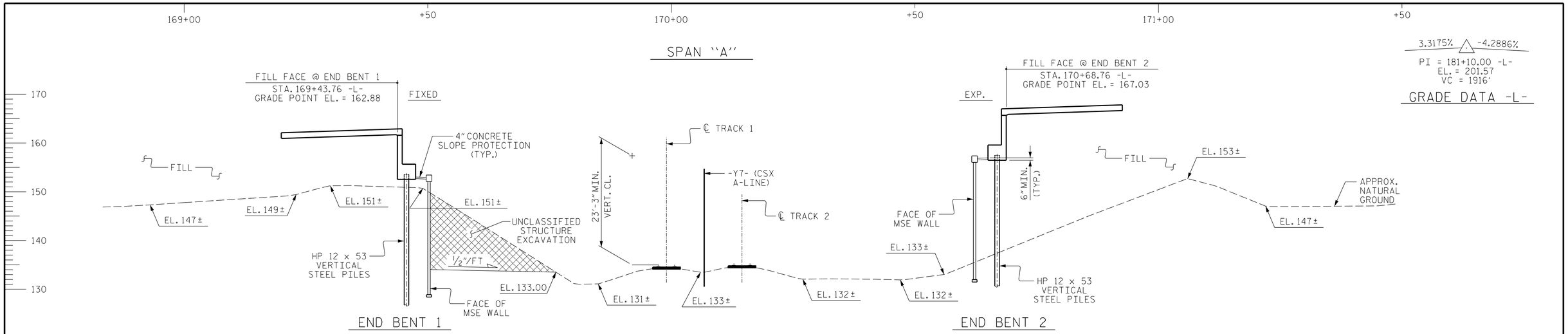

SECTION ALONG LEFT LANE CONTROL LINE

(SECTIONS AT END BENTS TAKEN AT RIGHT ANGLES)
(FUTURE TRACKS NOT SHOWN FOR CLARITY)

TOP OF RAIL ELEVATIONS					
-Y7- (TRACK 1)			-Y7- (TRACK 2)		
STATION	LEFT RAIL	RIGHT RAIL	STATION	LEFT RAIL	RIGHT RAIL
10+00.01	132.52	132.54	9+98.94	132.62	---
11+18.35	133.03	133.02	10+21.92	---	132.71
12+12.85	133.40	133.41	11+17.05	133.08	133.05
13+07.36	133.72	133.72	12+13.17	133.45	133.45
14+01.37	133.96	133.93	13+06.40	133.83	133.79
14+91.44	134.11	134.10	14+01.96	134.13	134.14
15+86.93	134.25	134.26	14+91.70	134.38	134.38
16+83.03	134.51	134.51	15+87.00	134.57	134.56
17+78.88	134.66	134.68	16+82.32	134.73	134.74
18+77.10	134.72	134.72	17+78.85	134.85	134.84
19+83.12	134.71	134.73	18+76.54	134.90	134.93
			19+82.44	134.97	134.98

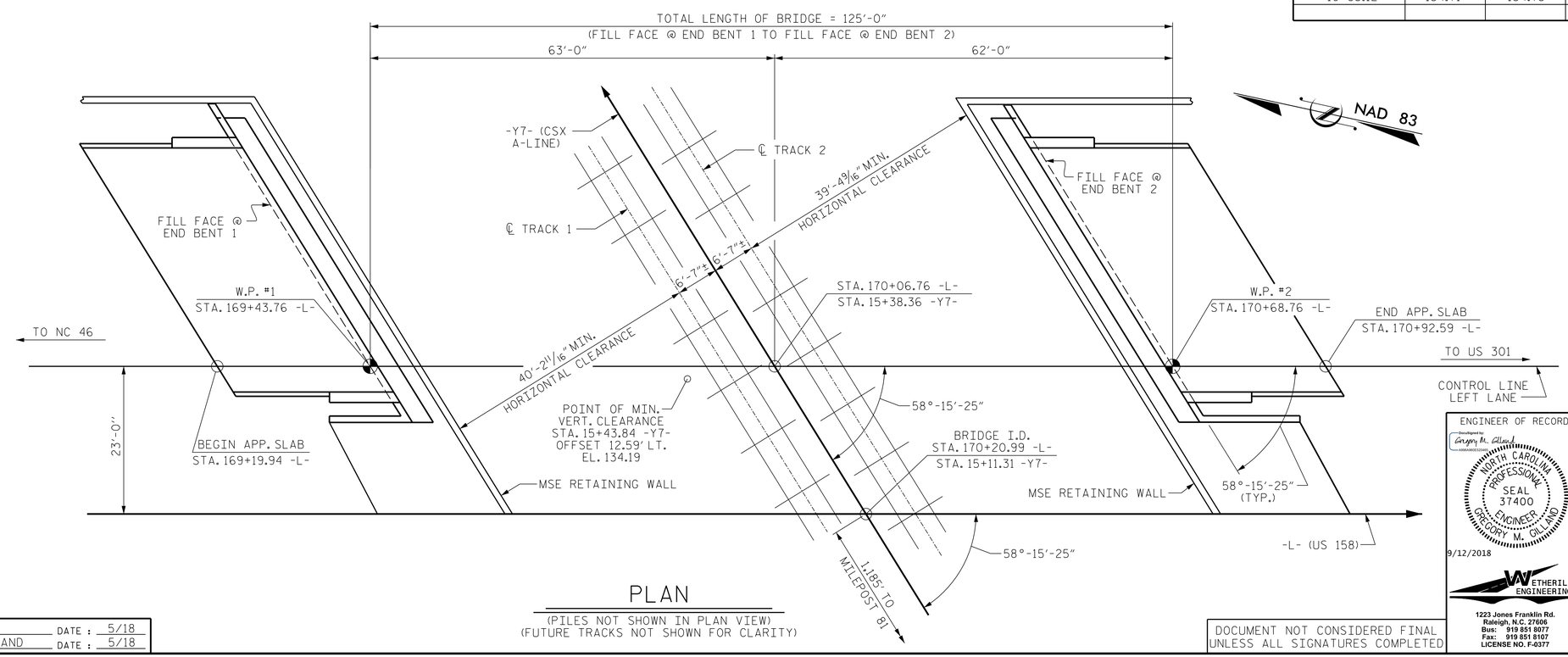

PLAN

(PILES NOT SHOWN IN PLAN VIEW)
(FUTURE TRACKS NOT SHOWN FOR CLARITY)

PROJECT NO. R-2582A
NORTHAMPTON COUNTY
STATION: 170+20.99 -L-
15+11.31 -Y7-
SHEET 1 OF 3
MILE POST 80.78
BRIDGE No. 126

ENGINEER OF RECORD:
Developed by: Gregory M. Gilland
NORTH CAROLINA PROFESSIONAL SEAL 37400 ENGINEER GREGORY M. GILLAND
9/12/2018

ETHERILL ENGINEERING
1223 Jones Franklin Rd.
Raleigh, N.C. 27606
Bus: 919 851 8077
Fax: 919 851 8107
LICENSE NO. F-0377

STATE OF NORTH CAROLINA
DEPARTMENT OF TRANSPORTATION
RALEIGH

GENERAL DRAWING
LEFT LANE BRIDGE
ON US 158 OVER CSX A-LINE
BETWEEN NC 46 & US 301

REVISIONS						
NO.	BY:	DATE:	NO.	BY:	DATE:	
1			3			
2			4			

SHEET NO. S1-1
TOTAL SHEETS 27

DRAWN BY : D. HODGE DATE : 5/18
CHECKED BY : G.M. GILLAND DATE : 5/18

DOCUMENT NOT CONSIDERED FINAL UNLESS ALL SIGNATURES COMPLETED

P:\2018\18127.02 R-2582A\Structures\Site 1\DGN\STR1_LTLN\R2582A_SMU_ GD_650126.dgn
9/5/2018 3:40:11 PM

DocuSign Envelope ID: BEF411B5-C78F-4B80-9F36-1E200D7052D4

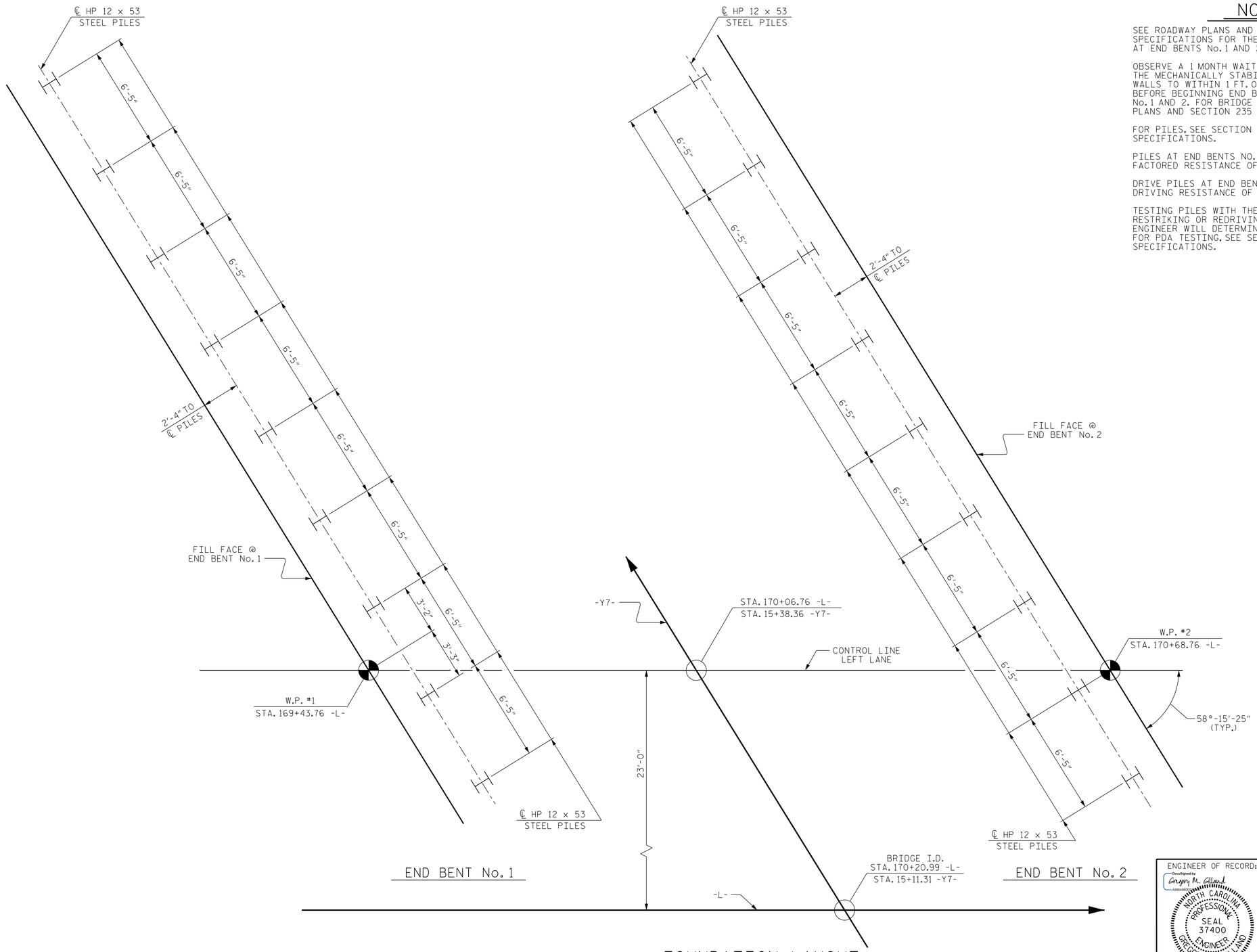

FOUNDATION LAYOUT

NOTES

SEE ROADWAY PLANS AND SECTION 235 OF THE STANDARD SPECIFICATIONS FOR THE SETTLEMENT GUAGES REQUIRED AT END BENTS No. 1 AND 2.

OBSERVE A 1 MONTH WAITING PERIOD AFTER CONSTRUCTING THE MECHANICALLY STABILIZED EARTH (MSE) ABUTMENT WALLS TO WITHIN 1 FT. OF THE BOTTOM OF CAP ELEVATION BEFORE BEGINNING END BENT CONSTRUCTION AT END BENTS No. 1 AND 2. FOR BRIDGE WAITING PERIODS, SEE ROADWAY PLANS AND SECTION 235 OF THE STANDARD SPECIFICATIONS.

FOR PILES, SEE SECTION 450 OF THE STANDARD SPECIFICATIONS.

PILES AT END BENTS NO. 1 AND 2 ARE DESIGNED FOR A FACTORED RESISTANCE OF 110 TONS PER PILE.

DRIVE PILES AT END BENTS NO. 1 AND 2 TO A REQUIRED DRIVING RESISTANCE OF 150 TONS PER PILE.

TESTING PILES WITH THE PDA DURING DRIVING, RESTRIKING OR REDRIVING MAY BE REQUIRED. THE ENGINEER WILL DETERMINE THE NEED FOR PDA TESTING. FOR PDA TESTING, SEE SECTION 450 OF THE STANDARD SPECIFICATIONS.

PROJECT NO. R-2582A
NORTHAMPTON COUNTY
STATION: 170+20.99 -L-

SHEET 2 OF 3

ENGINEER OF RECORD:
DocuSigned by: Gregory M. Gilland
NORTH CAROLINA PROFESSIONAL SEAL 37400 ENGINEER GREGORY M. GILLAND
1/23/2019

WETHERILL ENGINEERING
1223 Jones Franklin Rd.
Raleigh, N.C. 27606
Bus: 919 851 8077
Fax: 919 851 8107
LICENSE NO. F-0377

STATE OF NORTH CAROLINA
DEPARTMENT OF TRANSPORTATION
RALEIGH

GENERAL DRAWING
LEFT LANE BRIDGE
ON US 158 OVER CSX A-LINE
BETWEEN NC 46 & US 301

REVISIONS						SHEET NO.
NO.	BY:	DATE:	NO.	BY:	DATE:	S1-2
1			3			TOTAL SHEETS
2			4			27

DOCUMENT NOT CONSIDERED FINAL UNLESS ALL SIGNATURES COMPLETED

DRAWN BY : D. HODGE DATE : 5/18
CHECKED BY : G.M. GILLAND DATE : 5/18

P:\2018\18127.02 R-2582A\Structures\Site 1\DGN\STR1_LT_LN\R2582A_SMU_ FL_650126.dgn
1/23/2019 10:41:04 AM

DocuSign Envelope ID: 2862EEE0-D568-45AA-8E16-EA956DC50B31

BM #3: R/R SPIKE IN POWER POLE, 392' RT. OF STA. 170+32 -L-, ELEV. = 154.85

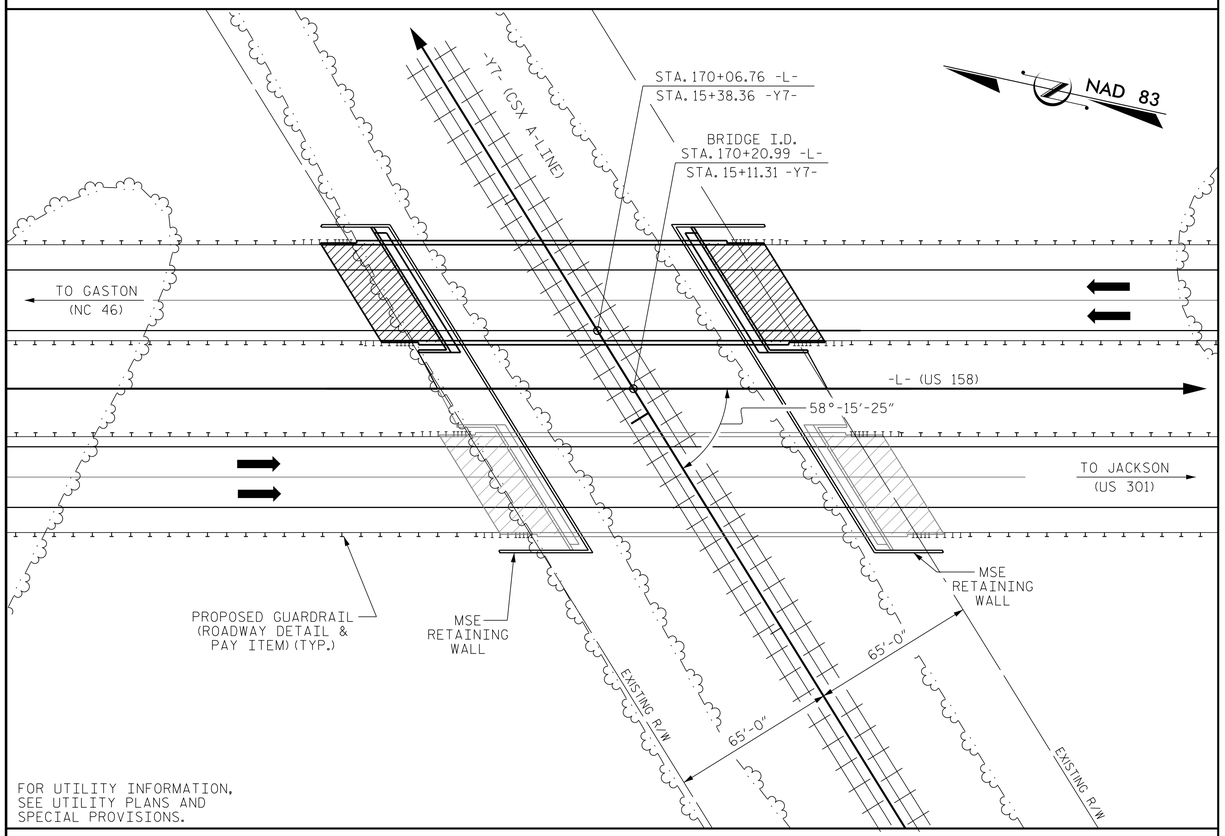

LOCATION SKETCH

RAILROAD EROSION CONTROL DETAIL

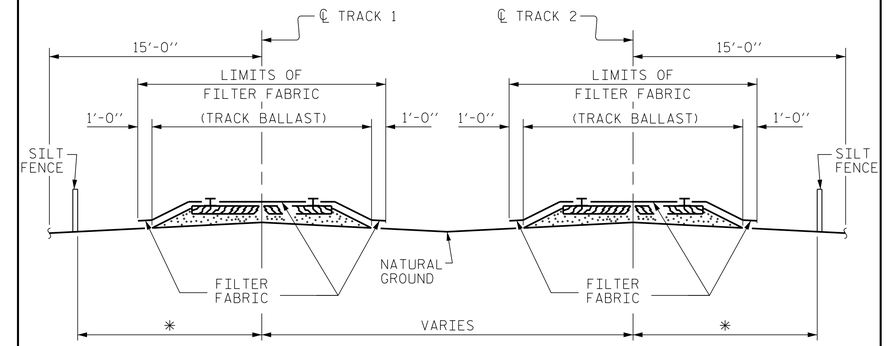

* TO BE DETERMINED BY THE RESIDENT ENGINEER IN CONSULTATION WITH THE RAILROAD ENGINEER.

NOTES

RAILROAD EROSION CONTROL MEASURES SHALL BE INSTALLED PRIOR TO PERFORMING ANY WORK IN THE RAILROAD RIGHT-OF-WAY.

ADDITIONAL EROSION CONTROL MEASURES FOR PROTECTION OF RAILROAD DITCHES MAY BE REQUIRED AS DIRECTED BY THE ENGINEER.

NO SEPARATE PAYMENT WILL BE MADE FOR RAILROAD EROSION CONTROL MEASURES.

LIMITS OF SILT FENCE AND FILTER FABRIC PARALLEL TO RAILROAD SHALL EXTEND A MINIMUM OF 25'-0" OUTSIDE EDGE OF SUPERSTRUCTURE OR TOE OF SLOPE ON CONSTRUCTION. A GREATER LENGTH OF SILT FENCE OR FILTER FABRIC MAY BE REQUIRED IF SO DIRECTED BY THE ENGINEER.

FILTER FABRIC TO BE NAILED TO TIMBER RAIL TIES WITH PRIME SOURCE "GRIP CAP" OR EQUIVALENT. FILTER FABRIC ON SHOULDER TO BE SECURED AS DIRECTED BY THE ENGINEER AND RAILROAD.

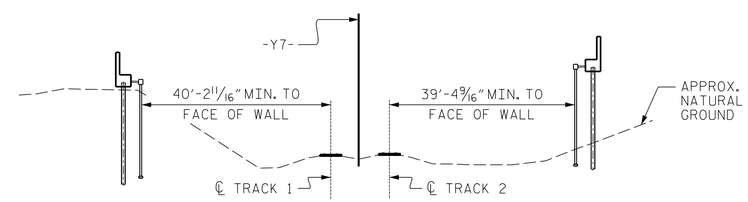

END BENT 1 END BENT 2

SECTION THROUGH RAILROAD

LOOKING IN DIRECTION OF INCREASING STATIONS ON RAILROAD
(SPAN LENGTH BASED ON THIS SECTION)
(FUTURE TRACKS NOT SHOWN FOR CLARITY)

GENERAL NOTES

ASSUMED LIVE LOAD = HL-93 OR ALTERNATE LOADING.

THIS BRIDGE HAS BEEN DESIGNED IN ACCORDANCE WITH THE AASHTO LRFD BRIDGE DESIGN SPECIFICATIONS.

THIS BRIDGE IS LOCATED IN SEISMIC ZONE 1.

FOR OTHER DESIGN DATA AND GENERAL NOTES, SEE SHEET SN.

FOR SUBMITTAL OF WORKING DRAWINGS, SEE SPECIAL PROVISIONS.

FOR FALSEWORK AND FORMWORK, SEE SPECIAL PROVISIONS.

FOR CRANE SAFETY, SEE SPECIAL PROVISIONS.

FOR GROUT FOR STRUCTURES, SEE SPECIAL PROVISIONS.

FOR RAILROAD PROVISIONS, SEE SPECIAL PROVISIONS.

FOR RAILROAD PROVISIONS, SEE SPECIAL PROVISIONS. REMOVABLE FORMS MAY BE USED IN LIEU OF METAL STAY-IN-PLACE FORMS IN ACCORDANCE WITH ARTICLE 420-3 OF THE STANDARD SPECIFICATIONS.

THE RAILROAD TRACK TOP OF RAIL ELEVATIONS ON THE PLANS ARE FROM THE BEST INFORMATION AVAILABLE. PRIOR TO BEGINNING BRIDGE CONSTRUCTION, VERIFY THE TOP OF RAIL ELEVATIONS AND REPORT ANY VARIATIONS TO THE ENGINEER. ANY PLAN REVISIONS NECESSARY TO ACHIEVE THE REQUIRED MINIMUM CLEARANCE WILL BE PROVIDED BY THE DEPARTMENT.

NEEDLE BEAMS WILL NOT BE ALLOWED UNLESS OTHERWISE CALLED FOR ON THE PLANS OR APPROVED BY THE ENGINEER.

THE MATERIAL SHOWN IN THE CROSS-HATCHED AREA SHALL BE EXCAVATED FOR A DISTANCE OF 110 FT EACH SIDE OF CENTERLINE ROADWAY AS DIRECTED BY THE ENGINEER. THIS WORK WILL BE PAID FOR AT THE CONTRACT LUMP SUM PRICE FOR UNCLASSIFIED STRUCTURE EXCAVATION. SEE SECTION 412 OF THE STANDARD SPECIFICATIONS.

ALL EXCAVATED SOIL WITHIN THE RAILROAD RIGHT OF WAY SHALL REMAIN ON CSX PROPERTY AND BE PLACED AT THE DIRECTION OF THE CSX REPRESENTATIVE AND THE ENGINEER.

FOR EROSION CONTROL MEASURES, SEE EROSION CONTROL PLANS.

TOTAL BILL OF MATERIAL

	PDA TESTING	UNCLASSIFIED STRUCTURE EXCAVATION	REINFORCED CONCRETE DECK SLAB	GROOVING BRIDGE FLOORS	CLASS A CONCRETE	BRIDGE APPROACH SLABS	REINFORCING STEEL	MODIFIED 72" PRESTRESSED CONCRETE GIRDERS		PILE DRIVING EQUIPMENT SETUP FOR HP 12 X 53 STEEL PILES	HP 12 x 53 STEEL PILES		PILE REDRIVES	CONCRETE BARRIER RAIL	72" CHAIN LINK FENCE	4" SLOPE PROTECTION	ELASTOMERIC BEARINGS	EXPANSION JOINT SEALS
	EACH	LUMP SUM	SQ. FT.	SQ. FT.	CU. YDS.	LUMP SUM	LBS.	No.	LIN. FT.	EACH	No.	LIN. FT.	EACH	LIN. FT.	LIN. FT.	SQ. YDS.	LUMP SUM	LUMP SUM
SUPERSTRUCTURE			5,054	5,891		LUMP SUM		4	481.38					286.96	240		LUMP SUM	LUMP SUM
END BENT No. 1					41.8		6,195			9	9	855	5			49		
END BENT No. 2					43.9		6,805			9	9	880	5			52		
TOTAL	1	LUMP SUM	5,054	5,891	85.7	LUMP SUM	13,000	4	481.38	18	18	1,735	10	286.96	240	101	LUMP SUM	LUMP SUM

PROJECT NO. R-2582A
NORTHAMPTON COUNTY
STATION: 170+20.99 -L-

SHEET 3 OF 3

ENGINEER OF RECORD:
5/2/2019
NORTH CAROLINA PROFESSIONAL SEAL 37400 ENGINEER GREGORY M. GILLAND
DocuSigned by: Gregory M. Gilland
A3995A5B9B4...
WETHERILL ENGINEERING
1223 Jones Franklin Rd.
Raleigh, N.C. 27606
Bus: 919 851 8077
Fax: 919 851 8107
LICENSE NO. F-0377

STATE OF NORTH CAROLINA
DEPARTMENT OF TRANSPORTATION
RALEIGH

GENERAL DRAWING
LEFT LANE BRIDGE
ON US 158 OVER CSX A-LINE
BETWEEN NC 46 & US 301

REVISIONS						SHEET NO.
NO.	BY:	DATE:	NO.	BY:	DATE:	S1-3
1			3			TOTAL SHEETS
2			4			27

DRAWN BY : D. HODGE DATE : 5/18
CHECKED BY : G.M. GILLAND DATE : 5/18

DOCUMENT NOT CONSIDERED FINAL UNLESS ALL SIGNATURES COMPLETED

P:\2018\18127.02 R-2582A\Structures\Site 1\DGN\STR1_LTLN DGN\R2582A_SMU_ GD_650126.dgn
4/30/2019 1:59:16 PM

DocuSign Envelope ID: 7554F43B-51A1-4C68-9A41-7FB1BD88385F

LOAD AND RESISTANCE FACTOR RATING (LRFR) SUMMARY FOR PRESTRESSED CONCRETE GIRDERS

LEVEL		VEHICLE	WEIGHT (W) (TONS)	CONTROLLING LOAD RATING (#)	MINIMUM RATING FACTORS (RF)	TONS = W × RF	STRENGTH I LIMIT STATE											SERVICE III LIMIT STATE						COMMENT NUMBER
							LIVE-LOAD FACTORS (γ_{LL})	MOMENT					SHEAR					LIVE-LOAD FACTORS (γ_{LL})	MOMENT					
								DISTRIBUTION FACTORS (DF)	RATING FACTOR	SPAN	GIRDER LOCATION	DISTANCE FROM LEFT END OF SPAN (ft)	DISTRIBUTION FACTORS (DF)	RATING FACTOR	SPAN	GIRDER LOCATION	DISTANCE FROM LEFT END OF SPAN (ft)		DISTRIBUTION FACTORS (DF)	RATING FACTOR	SPAN	GIRDER LOCATION	DISTANCE FROM LEFT END OF SPAN (ft)	
DESIGN LOAD RATING		HL-93 (INVENTORY)	N/A	1	1.15	--	1.75	0.940	1.38	A	EL	59.46	1.090	1.15	A	I	95.57	0.80	0.940	1.15	A	EL	59.46	1
		HL-93 (OPERATING)	N/A		1.78	--	1.35	0.940	1.78	A	EL	59.46	1.090	1.80	A	I	95.57	N/A	--	--	--	--	--	
		HS-20 (INVENTORY)	36.000	2	1.68	60.48	1.75	0.940	2.01	A	EL	59.46	1.090	1.89	A	I	95.57	0.80	0.940	1.68	A	EL	59.46	
		HS-20 (OPERATING)	36.000		2.49	89.64	1.35	0.940	2.60	A	EL	59.46	1.090	2.49	A	I	95.57	N/A	--	--	--	--	--	
LEGAL LOAD RATING	SINGLE VEHICLE (SV)	SNSH	13.500		4.06	54.81	1.40	0.940	6.08	A	EL	59.46	1.090	6.17	A	I	95.57	0.80	0.940	4.06	A	EL	59.46	
		SNGARBS2	20.000		2.90	58.00	1.40	0.940	4.34	A	EL	59.46	1.090	4.26	A	I	95.57	0.80	0.940	2.90	A	EL	59.46	
		SNAGRIS2	22.000		2.70	59.40	1.40	0.940	4.04	A	EL	59.46	1.090	3.92	A	I	95.57	0.80	0.940	2.70	A	EL	59.46	
		SNCOTTS3	27.250		2.02	55.05	1.40	0.940	3.02	A	EL	59.46	1.090	2.99	A	I	95.57	0.80	0.940	2.02	A	EL	59.46	
		SNAGGRS4	34.925		1.64	57.28	1.40	0.940	2.45	A	EL	59.46	1.090	2.40	A	I	95.57	0.80	0.940	1.64	A	EL	59.46	
		SNS5A	35.550		1.61	57.24	1.40	0.940	2.40	A	EL	59.46	1.090	2.40	A	I	95.57	0.80	0.940	1.61	A	EL	59.46	
		SNS6A	39.950		1.45	57.93	1.40	0.940	2.18	A	EL	59.46	1.090	2.16	A	I	95.57	0.80	0.940	1.45	A	EL	59.46	
		SNS7B	42.000		1.38	57.96	1.40	0.940	2.07	A	EL	59.46	1.090	2.09	A	I	95.57	0.80	0.940	1.38	A	EL	59.46	
	TRUCK TRACTOR SEMI-TRAILER (TTST)	TNAGRIT3	33.000		1.77	58.41	1.40	0.940	2.64	A	EL	59.46	1.090	2.62	A	I	95.57	0.80	0.940	1.77	A	EL	59.46	
		TNT4A	33.075		1.77	58.54	1.40	0.940	2.65	A	EL	59.46	1.090	2.57	A	I	95.57	0.80	0.940	1.77	A	EL	59.46	
		TNT6A	41.600		1.43	59.49	1.40	0.940	2.14	A	EL	59.46	1.090	2.20	A	I	95.57	0.80	0.940	1.43	A	EL	59.46	
		TNT7A	42.000		1.43	60.06	1.40	0.940	2.14	A	EL	59.46	1.090	2.16	A	I	95.57	0.80	0.940	1.43	A	EL	59.46	
		TNT7B	42.000		1.45	60.90	1.40	0.940	2.18	A	EL	59.46	1.090	2.06	A	I	95.57	0.80	0.940	1.45	A	EL	59.46	
		TNAGRIT4	43.000		1.40	60.20	1.40	0.940	2.09	A	EL	59.46	1.090	2.00	A	I	95.57	0.80	0.940	1.40	A	EL	59.46	
		TNAGT5A	45.000		1.33	59.85	1.40	0.940	1.99	A	EL	59.46	1.090	1.95	A	I	95.57	0.80	0.940	1.33	A	EL	59.46	
		TNAGT5B	45.000	3	1.32	59.40	1.40	0.940	1.97	A	EL	59.46	1.090	1.89	A	I	95.57	0.80	0.940	1.32	A	EL	59.46	

LOAD FACTORS:

DESIGN LOAD RATING FACTORS	LIMIT STATE	γ_{DC}	γ_{DW}
	STRENGTH I	1.25	1.50
	SERVICE III	1.00	1.00

NOTES:

MINIMUM RATING FACTORS ARE BASED ON THE STRENGTH I AND SERVICE III LIMIT STATES.

ALLOWABLE STRESSES FOR SERVICE III LIMIT STATE ARE AS REQUIRED FOR DESIGN.

COMMENTS:

1. CONTROLLING\DESIGN LOAD RATING 1 IS AT TWO LOCATIONS, SEE SUMMARY CHART.
2.
3.
4.

CONTROLLING LOAD RATING
1 DESIGN LOAD RATING (HL-93)
2 DESIGN LOAD RATING (HS-20)
3 LEGAL LOAD RATING **
** SEE CHART FOR VEHICLE TYPE

GIRDER LOCATION
I - INTERIOR GIRDER
EL - EXTERIOR LEFT GIRDER
ER - EXTERIOR RIGHT GIRDER

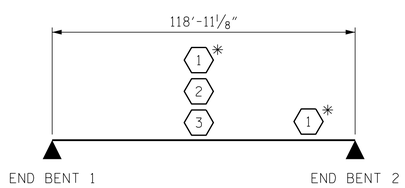

LRFR SUMMARY

* SEE COMMENT 1

PROJECT NO. R-2582A
NORTHAMPTON COUNTY
STATION: 170+20.99 -L-

ENGINEER OF RECORD:
Gregory M. Gilland
NORTH CAROLINA PROFESSIONAL SEAL 37400 ENGINEER GREGORY M. GILLAND
9/12/2018

WETHERILL ENGINEERING
1223 Jones Franklin Rd.
Raleigh, N.C. 27606
Bus: 919 851 8077
Fax: 919 851 8107
LICENSE NO. F-0377

STATE OF NORTH CAROLINA
DEPARTMENT OF TRANSPORTATION
RALEIGH

STANDARD
LRFR SUMMARY FOR PRESTRESSED CONCRETE GIRDERS
(NON-INTERSTATE TRAFFIC)
(LEFT LANE)

REVISIONS						SHEET NO.
NO.	BY:	DATE:	NO.	BY:	DATE:	S1-4
1			3			TOTAL SHEETS
2			4			27

DOCUMENT NOT CONSIDERED FINAL UNLESS ALL SIGNATURES COMPLETED

ASSEMBLED BY : D. HODGE		DATE : 5/18	
CHECKED BY : G.M. GILLAND		DATE : 5/18	
DRAWN BY : MAA 1/08	REV. 11/12/08RR	MAA/GM	
CHECKED BY : GM/DI 2/08	REV. 10/1/11	MAA/GM	
	REV. 12/17	MAA/THC	

STD. NO. LRFR1

P:\2018\18127.02 R-2582A\Structures\Site 1\DGN\STR1_LTLNR2582A_SMU_ LRFR_650126.dgn
9/5/2018 4:19:00 PM

DocuSign Envelope ID: 7554F43B-51A1-4C68-9A41-7FB1BD88385F

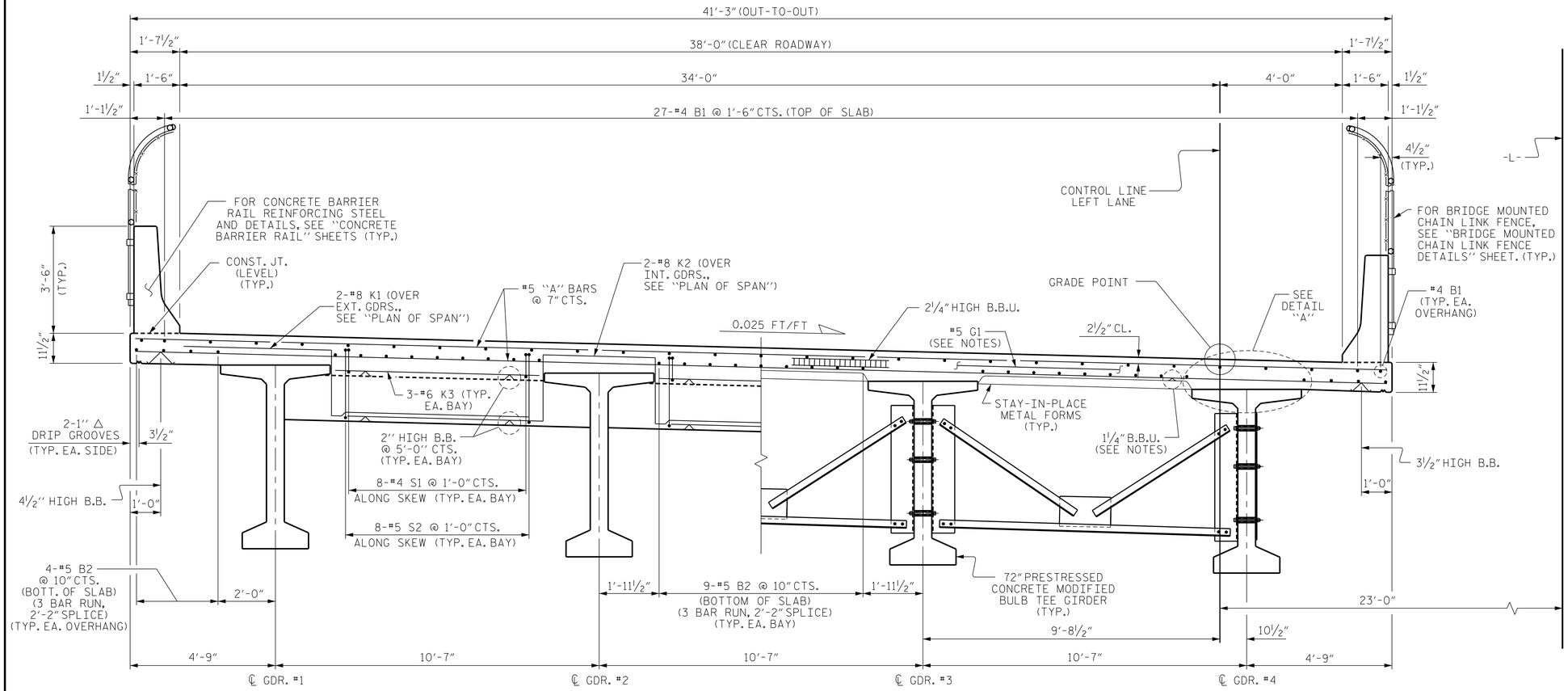

HALF SECTION - END BENT DIAPHRAGM

HALF SECTION - INTERMEDIATE DIAPHRAGM

SEE "INTERMEDIATE STEEL DIAPHRAGMS FOR 72" MODIFIED BULB TEE PRESTRESSED CONCRETE GIRDERS" SHEET FOR DETAILS

TYPICAL SECTION

NOTES

PROVIDE 1¼" HIGH BEAM BOLSTERS UPPER AT 4'-0" CTS. ATOP THE METAL STAY-IN-PLACE FORMS TO SUPPORT THE BOTTOM MAT OF 'A' BARS. WHEN USING REMOVABLE FORMS, PROVIDE CONTINUOUS HIGH CHAIRS FOR METAL DECK (C.H.C.M.) @ 4'-0" CTS. WITH A HEIGHT TO SUPPORT THE BOTTOM MAT OF 'A' BARS A CLEAR DISTANCE OF 2½" ABOVE THE TOP OF THE REMOVABLE FORM.

LONGITUDINAL STEEL MAY BE SHIFTED SLIGHTLY, AS NECESSARY, TO AVOID INTERFERENCE WITH STIRRUPS IN PRESTRESSED CONCRETE GIRDERS.

BARRIER RAIL SHALL NOT BE CAST UNTIL ALL SLAB CONCRETE HAS BEEN CAST AND HAS REACHED A MINIMUM COMPRESSIVE STRENGTH OF 3,000 PSI.

#5 G1 BAR MAY BE SHIFTED SLIGHTLY AS NECESSARY TO CLEAR REINFORCING STEEL AND STIRRUPS.

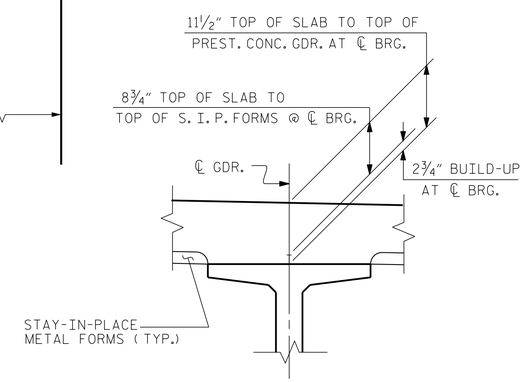

DETAIL "A"

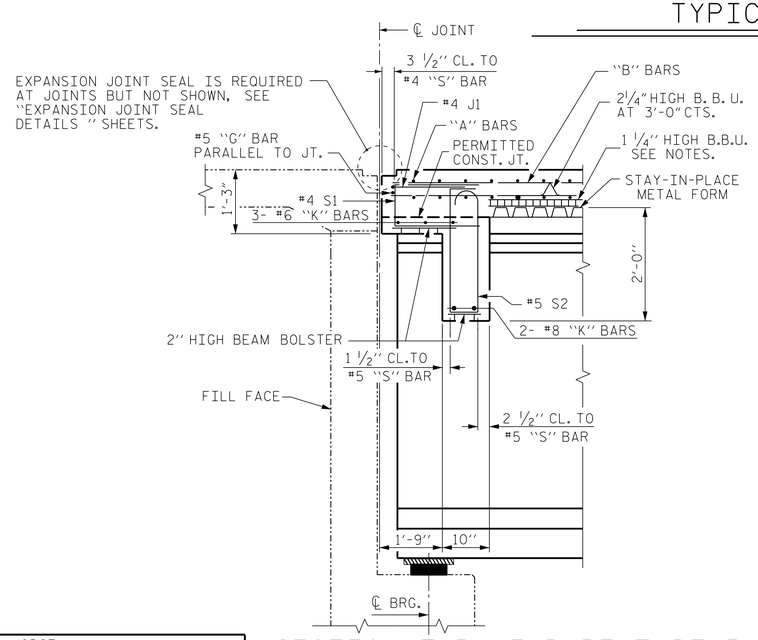

SECTION THRU END BENT DIAPHRAGM

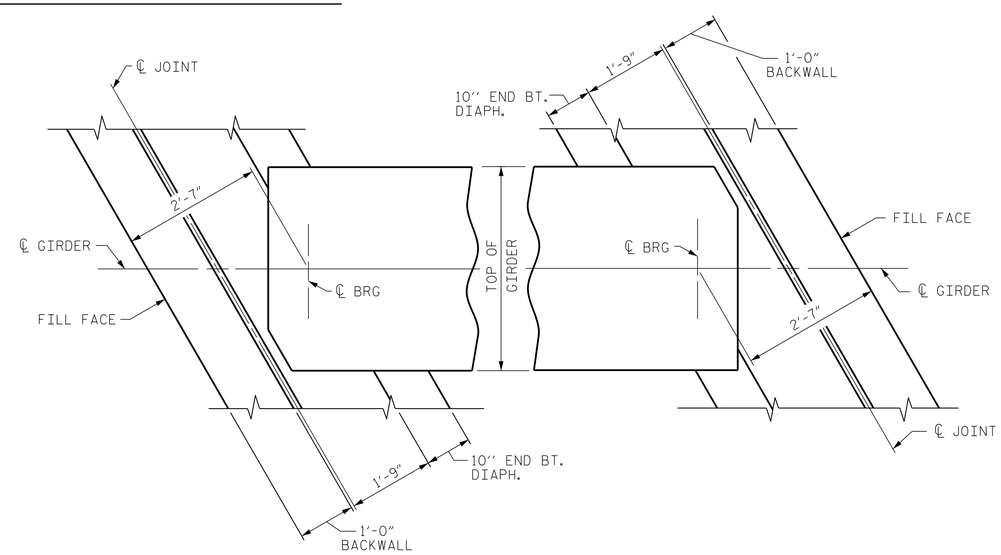

END BENT No. 1 DIAPHRAGM

END BENT No. 2 DIAPHRAGM

PLAN

PROJECT NO. R-2582A

NORTHAMPTON COUNTY

STATION: 170+20.99 -L-

ENGINEER OF RECORD:

Gregory M. Gilland

NORTH CAROLINA PROFESSIONAL SEAL 37400 ENGINEER GREGORY M. GILLAND

9/12/2018

WETHERILL ENGINEERING

1223 Jones Franklin Rd.
Raleigh, N.C. 27606
Bus: 919 851 8077
Fax: 919 851 8107
LICENSE NO. F-0377

STATE OF NORTH CAROLINA
DEPARTMENT OF TRANSPORTATION
RALEIGH

SUPERSTRUCTURE

TYPICAL SECTION

(LEFT LANE)

REVISIONS						SHEET NO.
NO.	BY:	DATE:	NO.	BY:	DATE:	S1-5
1			3			TOTAL SHEETS
2			4			27

DRAWN BY : D. HODGE DATE : 3/18

CHECKED BY : B.C. HUNT DATE : 3/18

DOCUMENT NOT CONSIDERED FINAL UNLESS ALL SIGNATURES COMPLETED

P:\2018\18127.02 R-2582A\Structures\Site 1\DGN\STR1_LT_LN\R2582A_SMU_ TS_650126.dgn
9/5/2018 4:26:34 PM

DocuSign Envelope ID: 7554F43B-51A1-4C68-9A41-7FB1BD88385F

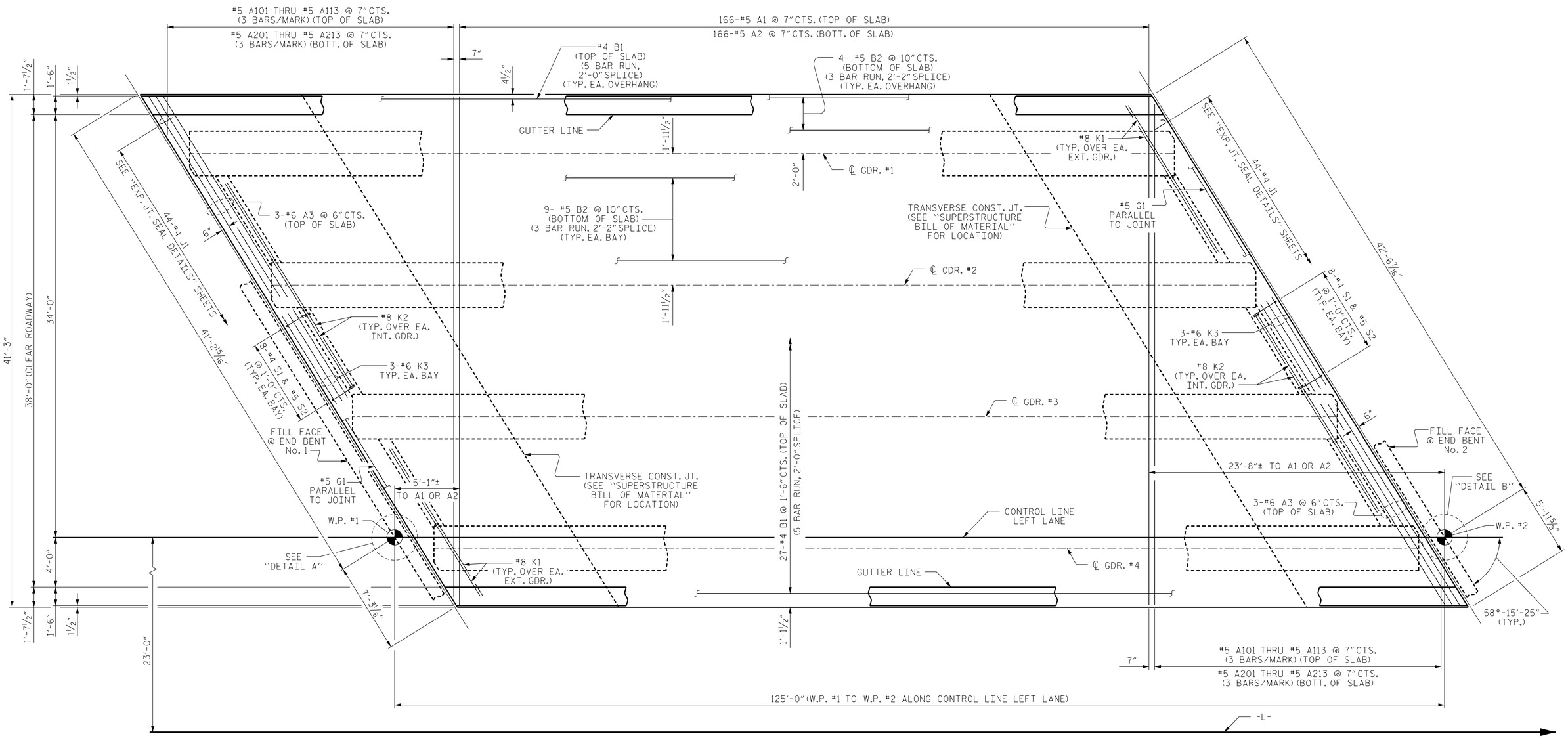

PLAN OF SPAN "A"

PROJECT NO. R-2582A
NORTHAMPTON COUNTY
STATION: 170+20.99 -L-

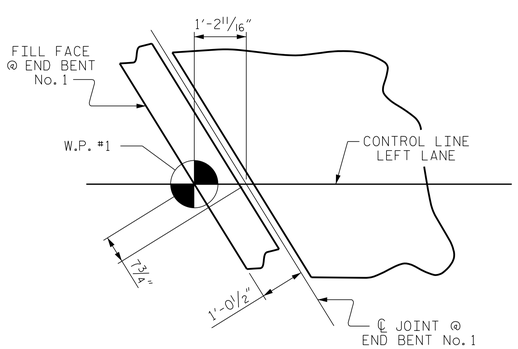

DETAIL A

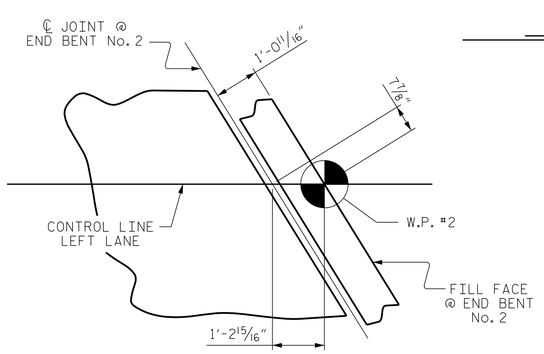

DETAIL B

NOTES :

FOR CONCRETE BARRIER RAIL DETAILS AND REINFORCING STEEL, SEE "CONCRETE BARRIER RAIL" SHEETS.

FOR LOCATIONS OF INTERMEDIATE STEEL DIAPHRAGMS, SEE "FRAMING PLAN" SHEET.

DRAWN BY : D. HODGE DATE : 3/18
CHECKED BY : B.C. HUNT DATE : 3/18

DOCUMENT NOT CONSIDERED FINAL UNLESS ALL SIGNATURES COMPLETED

ENGINEER OF RECORD:
Designed by: Gregory M. Gilland
NORTH CAROLINA PROFESSIONAL SEAL 37400 ENGINEER GREGORY M. GILLAND
9/12/2018

ETHERILL ENGINEERING
1223 Jones Franklin Rd.
Raleigh, N.C. 27606
Bus: 919 851 8077
Fax: 919 851 8107
LICENSE NO. F-0377

STATE OF NORTH CAROLINA
DEPARTMENT OF TRANSPORTATION
RALEIGH

SUPERSTRUCTURE
PLAN OF SPAN
(LEFT LANE)

REVISIONS						SHEET NO.
NO.	BY:	DATE:	NO.	BY:	DATE:	S1-6
1			3			TOTAL SHEETS
2			4			27

P:\2018\18127.02 R-2582A\Structures\Site 1\DGN\STR1_LT_LN\R2582A_SMU_ PS_650126.dgn
9/5/2018 4:24:10 PM

DocuSign Envelope ID: 7554F43B-51A1-4C68-9A41-7FB1BD88385F

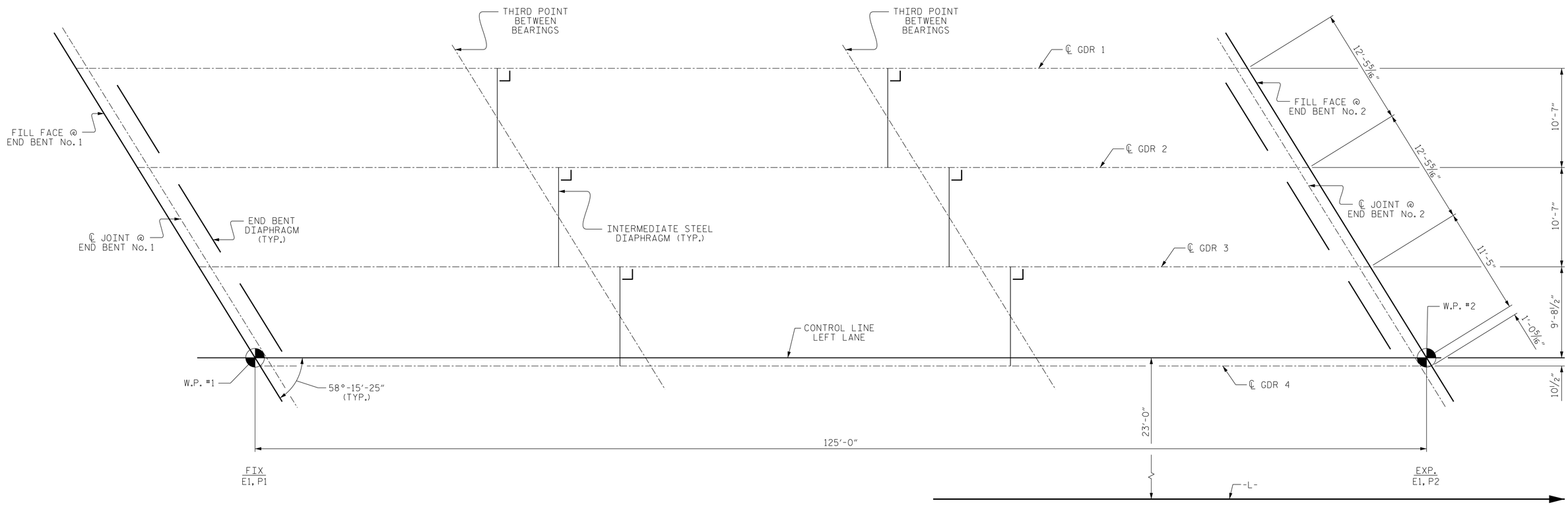

SPAN A

FRAMING PLAN

FOR LOCATION OF BOLT HOLES IN GIRDERS SEE SHEET ENTITLED "PRESTRESSED CONCRETE GIRDER DETAILS"

PROJECT NO. R-2582A

NORTHAMPTON COUNTY

STATION: 170+20.99 -L-

ENGINEER OF RECORD:

Gregory M. Gilland

NORTH CAROLINA PROFESSIONAL SEAL 37400 ENGINEER GREGORY M. GILLAND

9/12/2018

WETHERILL ENGINEERING

1223 Jones Franklin Rd.
Raleigh, N.C. 27606
Bus: 919 851 8077
Fax: 919 851 8107
LICENSE NO. F-0377

STATE OF NORTH CAROLINA
DEPARTMENT OF TRANSPORTATION
RALEIGH

SUPERSTRUCTURE
FRAMING PLAN
(LEFT LANE)

REVISIONS						SHEET NO.
NO.	BY:	DATE:	NO.	BY:	DATE:	S1-7
1			3			TOTAL SHEETS
2			4			27

DRAWN BY : D. HODGE DATE : 3/18
CHECKED BY : B.C. HUNT DATE : 3/18

DOCUMENT NOT CONSIDERED FINAL UNLESS ALL SIGNATURES COMPLETED

P:\2018\18127.02 R-2582A\Structures\Site 1\DGN\STR1_LTLN\R2582A_SMU_ FP_650126.dgn
9/5/2018 4:10:16 PM

DocuSign Envelope ID: E50CC9EE-D9EB-4902-9CE0-04433B70DDF9

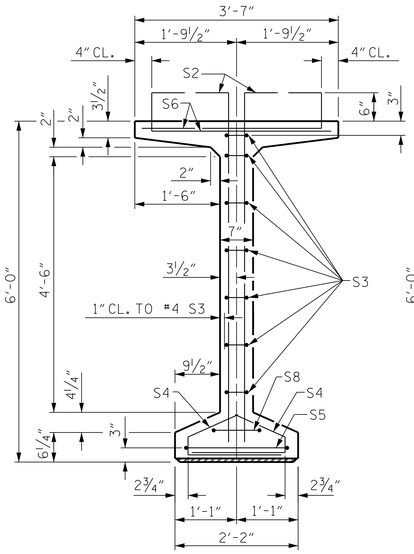

SECTION A-A

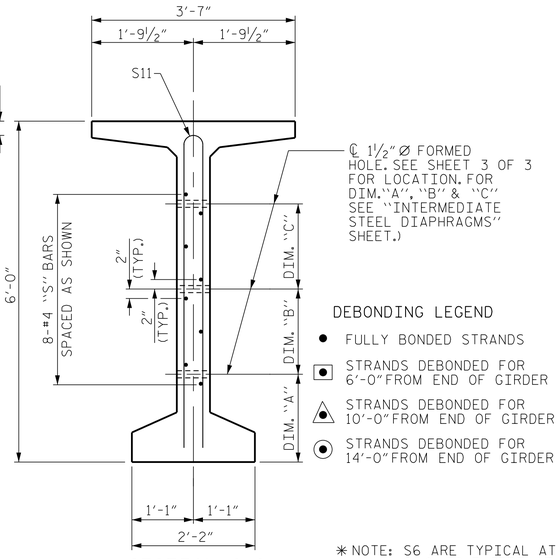

SECTION C-C

(S1, S6 AND S9 BARS NOT SHOWN)

DEBONDING LEGEND

- ● FULLY BONDED STRANDS
- ▣ STRANDS DEBONDED FOR 6'-0" FROM END OF GIRDER
- ◬ STRANDS DEBONDED FOR 10'-0" FROM END OF GIRDER
- ◉ STRANDS DEBONDED FOR 14'-0" FROM END OF GIRDER

✱ NOTE: S6 ARE TYPICAL AT ALL S1 & S2 EXCEPT AT CORNER CLIP OF TOP FLANGE

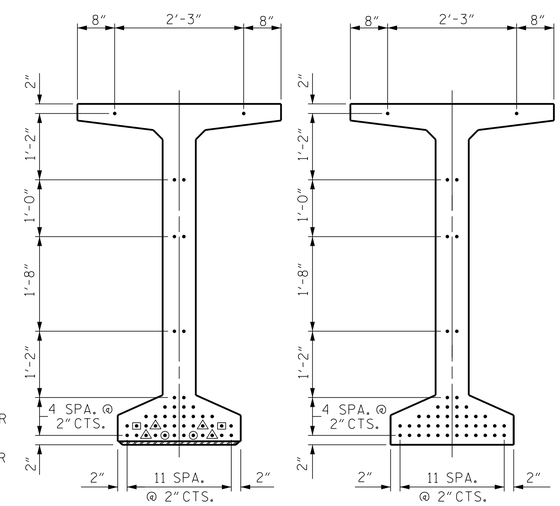

0.6" Ø LOW RELAXATION STRAND LAYOUT

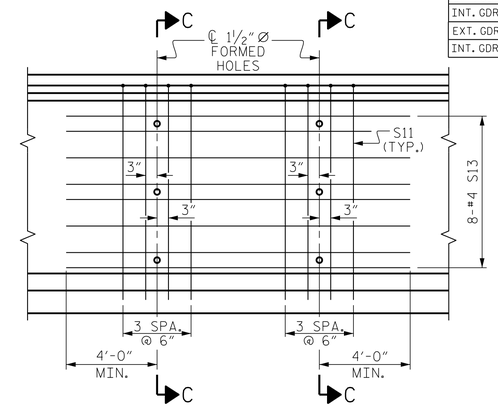

PARTIAL ELEVATION

SHOWING INTERMEDIATE STEEL DIAPHRAGM REINFORCING STEEL FOR INTERIOR GIRDER

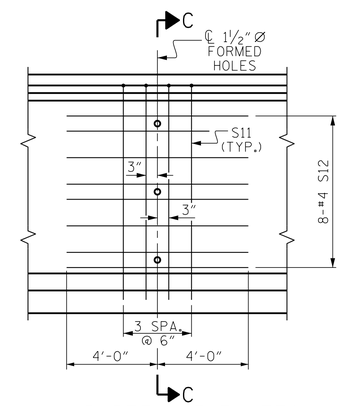

PARTIAL ELEVATION

SHOWING INTERMEDIATE STEEL DIAPHRAGM REINFORCING STEEL FOR EXTERIOR GIRDER

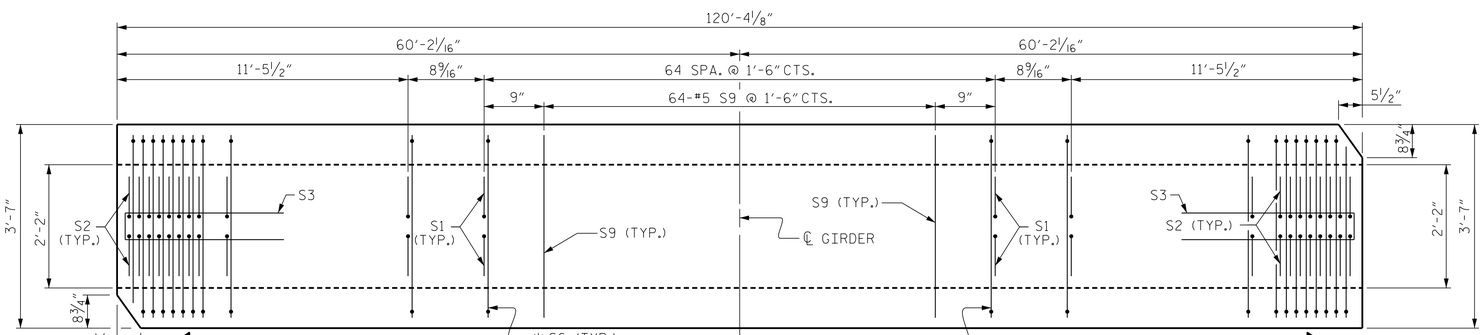

PLAN OF GIRDER

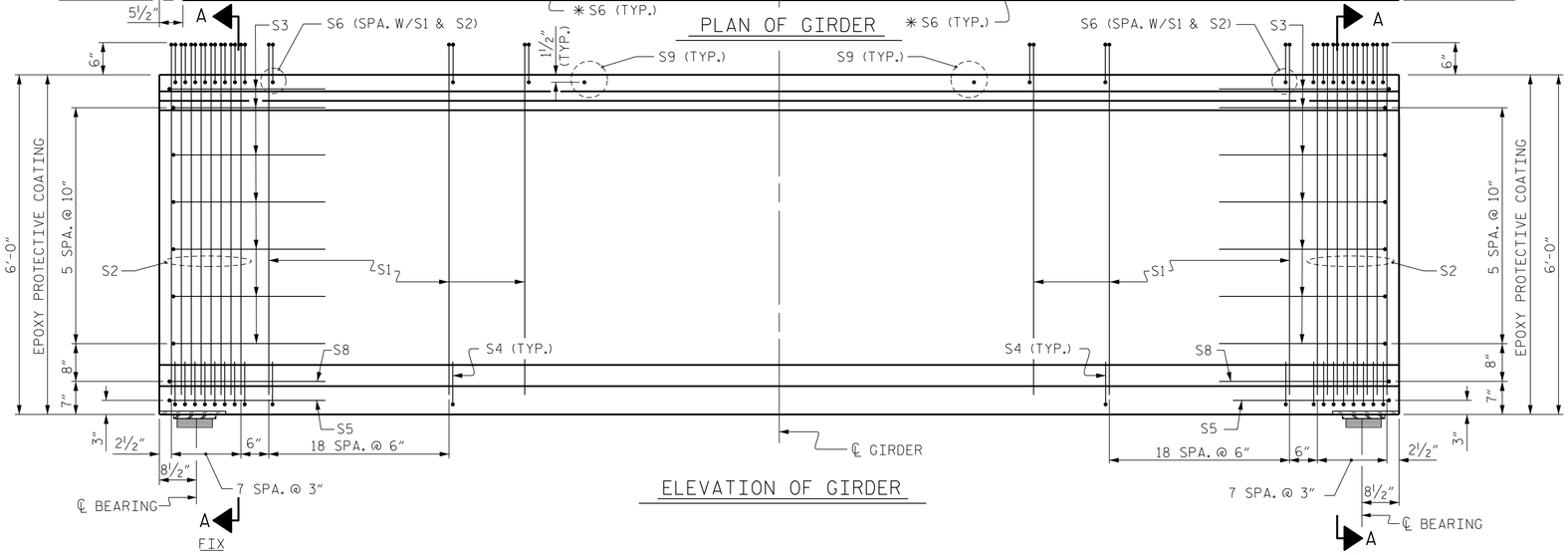

ELEVATION OF GIRDER

0.6" Ø L. R. GRADE 270 STRANDS

AREA (SQUARE INCHES)	ULTIMATE STRENGTH (LBS. PER STRAND)	APPLIED PRESTRESS (LBS. PER STRAND)
0.217	58,600	43,950

REINFORCING STEEL FOR ONE GDR

	BAR	NUMBER	SIZE	TYPE	LENGTH	WEIGHT
	S1	206	#4	1	6'-10"	940
	S2	32	#5	1	6'-10"	228
	S3	14	#4	2	8'-5"	79
	S4	108	#4	3	3'-0"	216
	S5	2	#5	2	9'-10"	21
	S6	236	#5	4	4'-4"	1067
	S8	2	#5	2	9'-0"	19
	S9	64	#5	STR	3'-3"	217
EXT. GDR.	S11	8	#5	5	11'-6"	96
INT. GDR.	S11	16	#5	5	11'-6"	192
EXT. GDR.	S12	16	#4	STR	8'-0"	86
INT. GDR.	S13	16	#4	STR	14'-7"	156

BAR TYPES

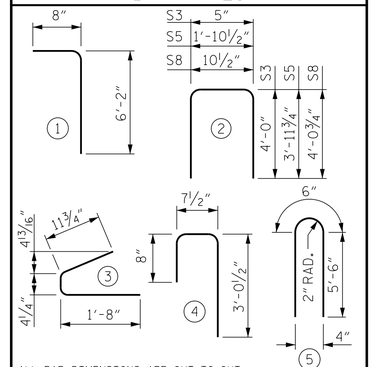

ALL BAR DIMENSIONS ARE OUT-TO-OUT

QUANTITIES FOR ONE GIRDER

	REINFORCING STEEL	9500 PSI CONCRETE	0.6" Ø L.R. STRANDS
	LB.	C.Y.	No.
EXTERIOR GIRDER	2969	25.8	46
INTERIOR GIRDER	3135	25.8	46

GIRDERS REQUIRED

NUMBER	LENGTH	TOTAL LENGTH
4	120'-4⅛"	481'-4½"

PROJECT NO. R-2582A

NORTHAMPTON COUNTY

STATION: 170+20.99 -L-

SHEET 1 OF 3

ENGINEER OF RECORD:

Docu Signed by: Gregory M. Gilland

NORTH CAROLINA PROFESSIONAL SEAL 37400 ENGINEER GREGORY M. GILLAND

10/16/2018

WETHERILL ENGINEERING

1223 Jones Franklin Rd.
Raleigh, N.C. 27606
Bus: 919 851 8077
Fax: 919 851 8107
LICENSE NO. F-0377

STATE OF NORTH CAROLINA
DEPARTMENT OF TRANSPORTATION
RALEIGH

72" PRESTRESSED CONCRETE MODIFIED BULB TEE (LEFT LANE)

REVISIONS						SHEET NO.
NO.	BY:	DATE:	NO.	BY:	DATE:	S1-8
1			3			TOTAL SHEETS
2			4			27

DRAWN BY : D. HODGE DATE : 3/18
CHECKED BY : B.C. HUNT DATE : 3/18

DOCUMENT NOT CONSIDERED FINAL UNLESS ALL SIGNATURES COMPLETED

P:\2018\181127.02 R-2582A\Structures\Site 1\DGN\STR1_LT_LN\R2582A_SMU_ PCG_650126.dgn
10/16/2018 1:57:18 PM

DocuSign Envelope ID: 7554F43B-51A1-4C68-9A41-7FB1BD88385F

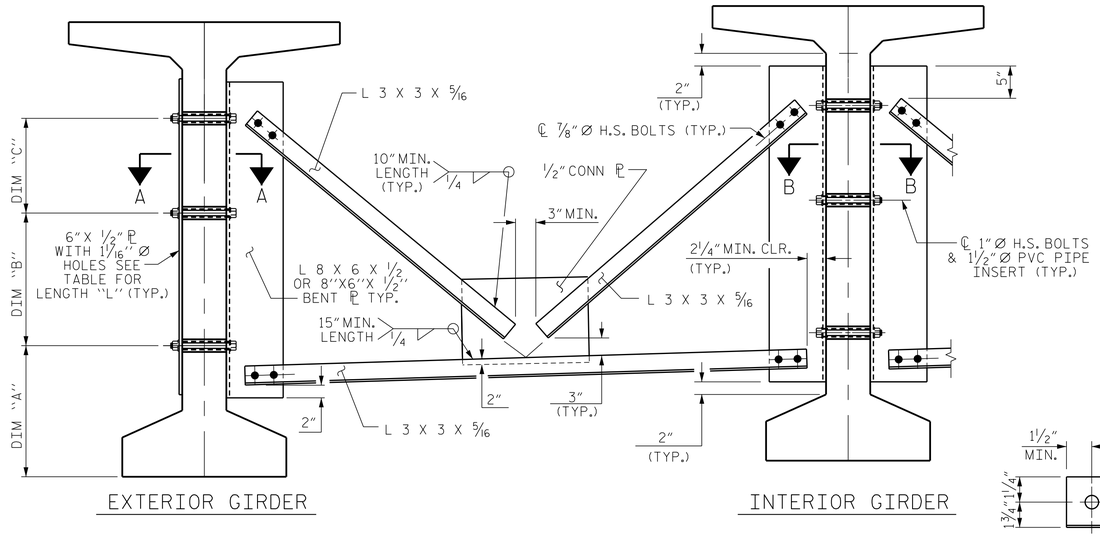

PART SECTION AT INTERMEDIATE DIAPHRAGM

(72" BULB TEE GIRDER SHOWN)

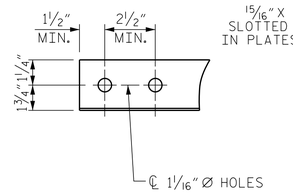

ANGLE END

(L 3 X 3 X 5/16)

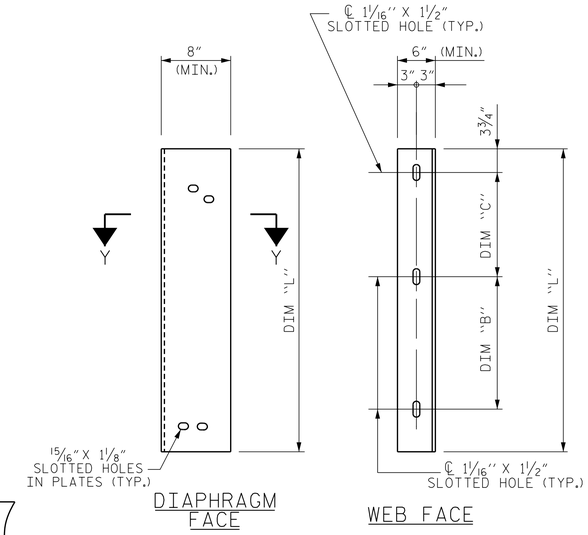

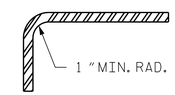

SECTION Y-Y

CONNECTOR PLATE DETAIL

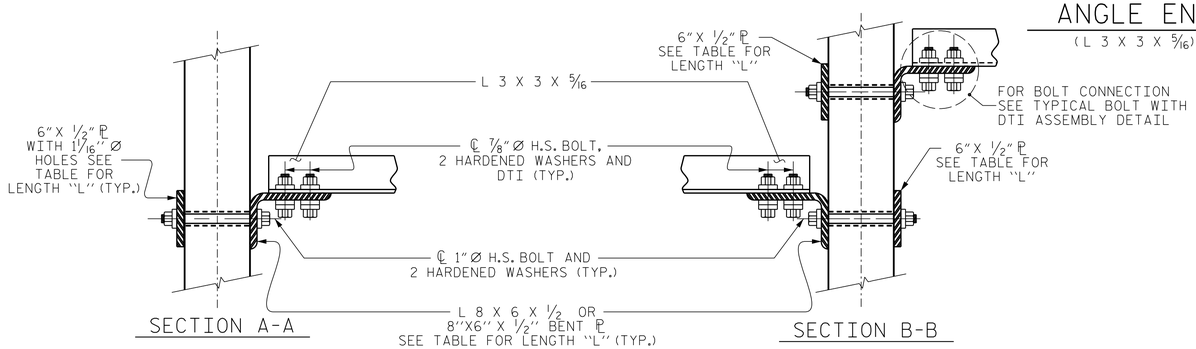

CONNECTION DETAILS

STRUCTURAL STEEL NOTES

ALL INTERMEDIATE DIAPHRAGM STEEL AND CONNECTOR PLATES SHALL BE AASHTO M270 GRADE 50 OR APPROVED EQUAL.

TENSION ON THE ASTM A325 BOLTS THROUGH THE ANGLE MEMBER SHALL BE CALIBRATED USING DIRECT TENSION INDICATOR WASHERS IN ACCORDANCE WITH THE STANDARD SPECIFICATIONS.

TENSION ON THE ASTM A449 BOLTS THROUGH THE GIRDER WEB SHALL BE SNUG TIGHTENED FOLLOWED BY AN ADDITIONAL 1/4 TURN.

THE PLATES, BENT PLATES, AND ANGLES SHALL BE GALVANIZED OR METALLIZED IN ACCORDANCE WITH THE STANDARD SPECIFICATIONS. FOR THERMAL SPRAYED COATINGS (METALLIZATION), SEE SPECIAL PROVISIONS.

FOR METALLIZATION, APPLY AN 8 MIL THICK 99.99 PERCENT ZINC (W-Zn-1) THERMAL SPRAYED COATING WITH A 0.5 MIL THICK SEAL COAT TO ALL STEEL DIAPHRAGM SURFACES IN ACCORDANCE WITH THE THERMAL SPRAYED COATINGS SPECIAL PROVISION AND SECTION 442 OF THE STANDARD SPECIFICATIONS.

GALVANIZE THE HIGH STRENGTH BOLTS, NUTS, WASHERS AND DIRECT TENSION INDICATORS IN ACCORDANCE WITH THE STANDARD SPECIFICATIONS.

USE AN ASTM F436 HARDENED WASHER WITH STANDARD AND SLOTTED HOLES UNDER EACH BOLT HEAD AND NUT.

FOR BOLTS THROUGH THE GIRDER WEB, PROVIDE SUFFICIENT LENGTH OF THREADS ON ALL BOLTS TO ACCOMMODATE WASHERS AND THE THICKNESS OF CONNECTING MEMBER PLUS AT LEAST 1/4" PROJECTION BEYOND THE NUT.

INTERMEDIATE DIAPHRAGM ASSEMBLY SHALL COMPLY WITH SECTION 1072 OF THE STANDARD SPECIFICATIONS.

SUBMIT TWO SETS OF WORKING DRAWINGS FOR THE INTERMEDIATE DIAPHRAGM ASSEMBLY FOR REVIEW, COMMENTS AND ACCEPTANCE. AFTER REVIEW, COMMENTS, AND ACCEPTANCE, SUBMIT SEVEN SETS FOR DISTRIBUTION.

IN THE EXTERIOR BAYS, PLACE TEMPORARY STRUTS BETWEEN PRESTRESSED GIRDERS ADJACENT TO THE STEEL DIAPHRAGMS. STRUTS SHALL REMAIN IN PLACE 3 DAYS AFTER CONCRETE IS PLACED.

THE COST OF THE STEEL DIAPHRAGMS AND ASSEMBLIES SHALL BE INCLUDED IN THE UNIT PRICE BID FOR PRESTRESSED CONCRETE GIRDERS.

TABLE

GIRDER TYPE	DIM "A"	DIM "B"	DIM "C"	DIM "L"
72" BULB TEE	1'-7"	1'-8"	1'-8"	4'-2"

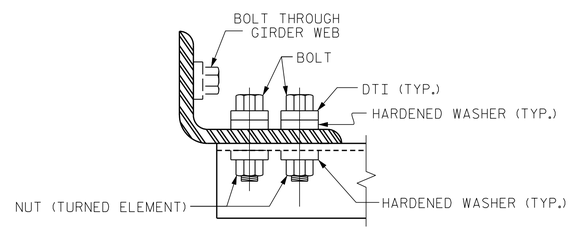

BOLT WITH DTI ASSEMBLY DETAIL

PROJECT NO. R-2582A

NORTHAMPTON COUNTY

STATION: 170+20.99 -L-

SHEET 2 OF 3

ENGINEER OF RECORD:

Gregory M. Gilland

NORTH CAROLINA PROFESSIONAL SEAL 37400 ENGINEER GREGORY M. GILLAND

9/12/2018

WETHERILL ENGINEERING

1223 Jones Franklin Rd.
Raleigh, N.C. 27606
Bus: 919 851 8077
Fax: 919 851 8107
LICENSE NO. F-0377

STATE OF NORTH CAROLINA
DEPARTMENT OF TRANSPORTATION
RALEIGH

STANDARD
INTERMEDIATE
STEEL DIAPHRAGMS FOR
72" MODIFIED BULB TEE
PRESTRESSED CONCRETE GIRDERS
(LEFT LANE)

REVISIONS						SHEET NO.
NO.	BY:	DATE:	NO.	BY:	DATE:	S1-9
1			3			TOTAL SHEETS
2			4			27

DOCUMENT NOT CONSIDERED FINAL UNLESS ALL SIGNATURES COMPLETED

ASSEMBLED BY : D. HODGE	DATE : 3/18		
CHECKED BY : B.C. HUNT	DATE : 3/18		
DRAWN BY : RWW 11/09	REV. 10/1/11	MAA/GM	
CHECKED BY : GM 11/09	REV. 12/17	MAA/THC	

P:\2018\18127.02 R-2582A\Structures\Site 1\DGN\STR1_LTLNR2582A_SMU_ PCG_650126.dgn
9/5/2018 4:21:34 PM

STD. NO. PCG11 (SHT 1)

DocuSign Envelope ID: 7554F43B-51A1-4C68-9A41-7FB1BD88385F

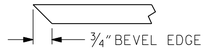

SECTION "F"

(SEE NOTES)

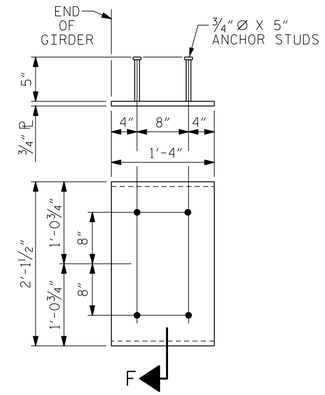

EMBEDDED PLATE "B-1" DETAILS FOR 72" MODIFIED BULB TEES

(2 REQ'D PER GIRDER)

NOTES

ALL PRESTRESSING STRANDS SHALL BE 7-WIRE LOW-RELAXATION GRADE 270 STRANDS AND SHALL CONFORM TO AASHTO M203 EXCEPT FOR SAMPLING REQUIREMENTS WHICH SHALL BE IN ACCORDANCE WITH THE STANDARD SPECIFICATIONS.

ALL REINFORCING STEEL SHALL BE GRADE 60.

APPLY EPOXY PROTECTIVE COATING TO END OF GIRDER SURFACES INDICATED IN ELEVATION VIEW.

EMBEDDED PLATE "B-1" SHALL BE GALVANIZED IN ACCORDANCE WITH THE STANDARD SPECIFICATIONS.

ANCHOR STUDS SHALL CONFORM TO AASHTO M169 GRADES 1010 THROUGH 1020 OR APPROVED EQUAL, AND SHALL MEET THE TYPE "B" REQUIREMENTS OF SUBSECTION 7.3 OF THE ANSI/AASHTO/AWS D1.5 BRIDGE WELDING CODE.

AT ENDS OF GIRDERS TO BE EMBEDDED IN CONCRETE DIAPHRAGMS OR END WALLS, PRESTRESSING STRANDS MAY EXTEND A MAXIMUM OF 2" BEYOND THE GIRDER ENDS. OTHERWISE, PRESTRESSING STRANDS SHALL BE CUT FLUSH WITH THE GIRDER ENDS.

THE TRANSFER OF LOAD FROM THE ANCHORAGES TO THE GIRDER SHALL BE DONE WHEN CONCRETE HAS REACHED A COMPRESSIVE STRENGTH OF NOT LESS THAN 7,500 PSI.

DEPENDING ON THE TYPE OF SYSTEM USED TO SUPPORT THE DECK SLAB FORMS, PRESET ANCHORS MAY BE NECESSARY IN THE PRESTRESSED CONCRETE GIRDER.

THE TOP SURFACE OF THE GIRDER, EXCLUDING THE OUTSIDE 4", SHALL BE RAKED TO A DEPTH OF 1/4".

WHEN DRAPED STRANDS ARE DETAILED, THE LONGITUDINAL LOCATION OF THE HOLD DOWN DEVICES SHALL BE WITHIN 6" OF THE LOCATION SHOWN AND THE CENTER OF GRAVITY OF THE GROUP OF DRAPED STRANDS SHALL BE LOCATED WITHIN 1/2" OF THE THEORETICAL LOCATION SHOWN.

A 2" x 2" CHAMFER IS ALLOWED AT THE INTERSECTION OF THE WEB AND THE BOTTOM FLANGE OF THE 72" MODIFIED BULB TEES.

THE CONTRACTOR HAS THE OPTION TO PROVIDE, AT NO ADDITIONAL COST TO THE DEPARTMENT, 2 ADDITIONAL STRANDS AT THE TOP OF THE GIRDER TO FACILITATE TYING OF THE REINFORCING STEEL. THESE STRANDS SHALL BE PULLED TO A LOAD OF 4500 lbs.

DEAD LOAD DEFLECTION TABLE FOR GIRDERS

0.6" Ø LOW RELAXATION	SPAN A GIRDERS #1 THRU #4																				
TWENTIETH POINTS	0	.05	.10	.15	.20	.25	.30	.35	.40	.45	.50	.55	.60	.65	.70	.75	.80	.85	.90	.95	0
CAMBER (GIRDER ALONE IN PLACE) ↑	0.000	0.046	0.091	0.133	0.172	0.207	0.236	0.259	0.276	0.286	0.290	0.286	0.276	0.259	0.236	0.207	0.172	0.133	0.091	0.046	0.000
* DEFLECTION DUE TO SUPERIMPOSED D.L. ↓	0.000	0.029	0.059	0.087	0.115	0.137	0.159	0.173	0.187	0.192	0.197	0.192	0.187	0.173	0.159	0.137	0.115	0.087	0.059	0.029	0.000
FINAL CAMBER ↑	0	3/16"	3/8"	9/16"	11/16"	13/16"	15/16"	1 1/16"	1 1/16"	1 1/8"	1 1/8"	1 1/8"	1 1/16"	1 1/16"	15/16"	13/16"	11/16"	9/16"	3/8"	3/16"	0

* INCLUDES FUTURE WEARING SURFACE
ALL VALUES ARE SHOWN IN FEET (DECIMAL FORM), EXCEPT "FINAL CAMBER", WHICH IS GIVEN IN INCHES (FRACTION FORM).

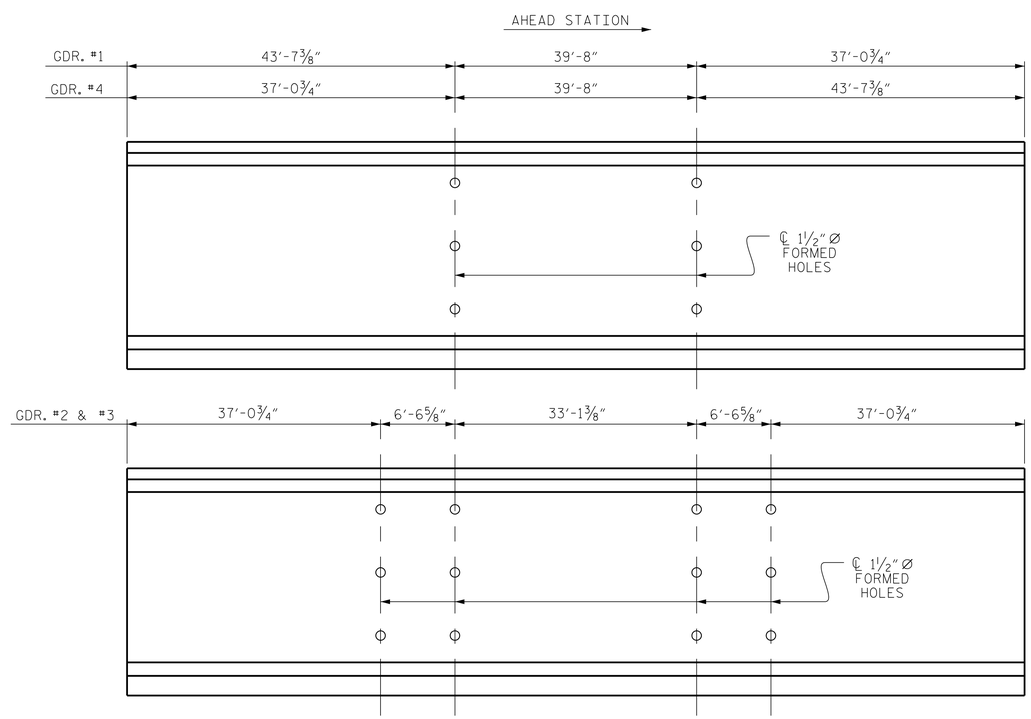

LOCATION OF BOLT HOLES IN GIRDERS

PROJECT NO. R-2582A
NORTHAMPTON COUNTY
STATION: 170+20.99 -L-

SHEET 3 OF 3

ENGINEER OF RECORD:
Gregory M. Gilland
NORTH CAROLINA PROFESSIONAL SEAL 37400 ENGINEER GREGORY M. GILLAND
9/12/2018

WETHERILL ENGINEERING
1223 Jones Franklin Rd.
Raleigh, N.C. 27606
Bus: 919 851 8077
Fax: 919 851 8107
LICENSE NO. F-0377

STATE OF NORTH CAROLINA
DEPARTMENT OF TRANSPORTATION
RALEIGH

STANDARD
PRESTRESSED CONCRETE GIRDER DETAILS
(LEFT LANE)

REVISIONS						SHEET NO.
NO.	BY:	DATE:	NO.	BY:	DATE:	S1-10
1			3			TOTAL SHEETS
2			4			27

DOCUMENT NOT CONSIDERED FINAL UNLESS ALL SIGNATURES COMPLETED

ASSEMBLED BY : D. HODGE	DATE : 3/18		
CHECKED BY : B.C. HUNT	DATE : 3/18		
DRAWN BY : ELR 11/91	REV. 1/15	MAA/TMG	
CHECKED BY : GRP 11/91	REV. 2/15	MAA/TMG	
	REV. 12/17	MAA/THC	

P:\2018\18127.02 R-2582A\Structures\Site 1\DGN\STR1_LTLN\R2582A_SMU_ PCG_650126.dgn
9/5/2018 4:22:26 PM

STD. NO. PCG9 (Sht. 4)

DocuSign Envelope ID: 7554F43B-51A1-4C68-9A41-7FB1BD88385F

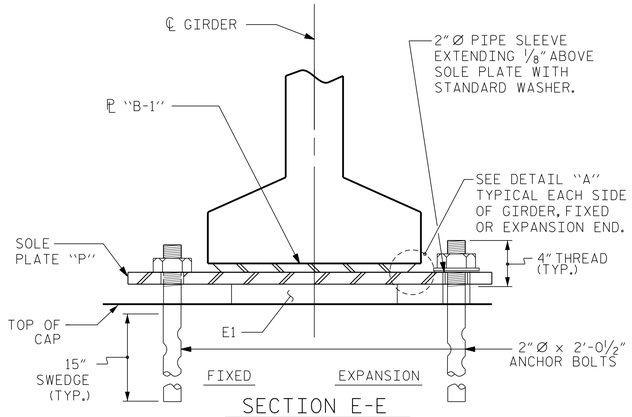

SECTION E-E

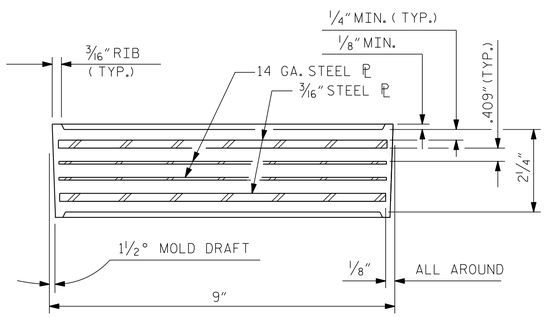

TYPICAL SECTION OF ELASTOMERIC BEARINGS

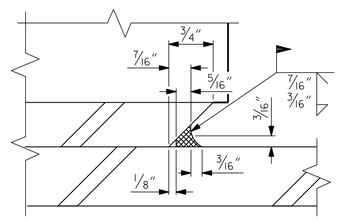

DETAIL "A"

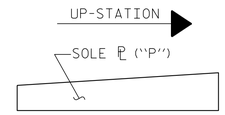

SOLE ℙ PLACEMENT DETAIL

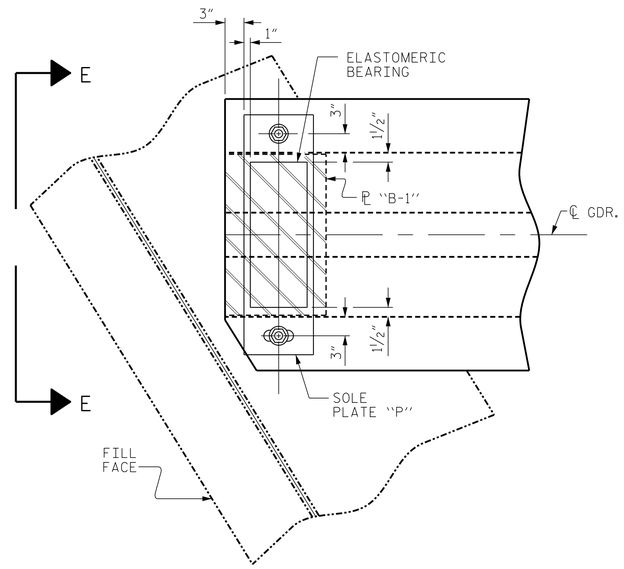

TYPICAL PLAN

(SHOWING SIMPLE SPAN END BENT)

NOTES

AT ALL FIXED POINTS OF SUPPORT, NUTS FOR ANCHOR BOLTS ARE TO BE TIGHTENED FINGER TIGHT AND THEN BACKED OFF 1/2 TURN. THE THREAD OF THE NUT AND BOLT SHALL THEN BE BURRED WITH A SHARP POINTED TOOL.

THE 2"Ø PIPE SLEEVE SHALL BE CUT FROM SCHEDULE 40 PVC PLASTIC PIPE. THE PVC PLASTIC PIPE SHALL MEET THE REQUIREMENTS OF ASTM D1785.

STEEL SOLE PLATES, ANCHOR BOLTS, NUTS, AND WASHERS SHALL BE GALVANIZED IN ACCORDANCE WITH THE STANDARD SPECIFICATIONS.

PRIOR TO WELDING, GRIND THE GALVANIZED SURFACE OF THE PORTION OF THE EMBEDDED PLATE AND SOLE PLATE THAT ARE TO BE WELDED. AFTER WELDING, DAMAGED GALVANIZED SURFACES SHALL BE REPAIRED IN ACCORDANCE WITH THE STANDARD SPECIFICATIONS.

WHEN WELDING THE SOLE PLATE TO THE EMBEDDED PLATE IN THE GIRDER, USE TEMPERATURE INDICATING WAX PENS, OR OTHER SUITABLE MEANS, TO ENSURE THAT THE TEMPERATURE OF THE SOLE PLATE DOES NOT EXCEED 300°F. TEMPERATURES ABOVE THIS MAY DAMAGE THE ELASTOMER.

SOLE PLATE "P", BOLTS, NUTS, WASHERS, AND PIPE SLEEVE SHALL BE INCLUDED IN THE PAY ITEM FOR PRESTRESSED CONCRETE GIRDERS.

ANCHOR BOLTS SHALL MEET THE REQUIREMENTS OF ASTM A449. NUTS SHALL MEET THE REQUIREMENTS OF AASHTO M291-DH OR AASHTO M292-2H. WASHERS SHALL MEET THE REQUIREMENTS OF AASHTO M293. NO SHOP DRAWINGS ARE REQUIRED FOR ANCHOR BOLTS, NUTS AND WASHERS. SHOP INSPECTION IS REQUIRED.

ALL SURFACES OF BEARING PLATES SHALL BE SMOOTH AND STRAIGHT.

THE ELASTOMER IN THE STEEL REINFORCED BEARINGS SHALL HAVE A SHEAR MODULUS OF 0.160 KSI, IN ACCORDANCE WITH AASHTO M251.

FOR STEEL REINFORCED ELASTOMERIC BEARINGS, SEE SPECIAL PROVISIONS.

ALL SOLE PLATES SHALL BE AASHTO M270 GRADE 36.

MAXIMUM ALLOWABLE SERVICE LOADS	
D.L.+L.L. (NO IMPACT)	
TYPE V	365 k

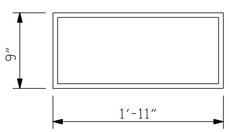

E1 (8 REQ'D)

PLAN VIEW OF ELASTOMERIC BEARING

TYPE V

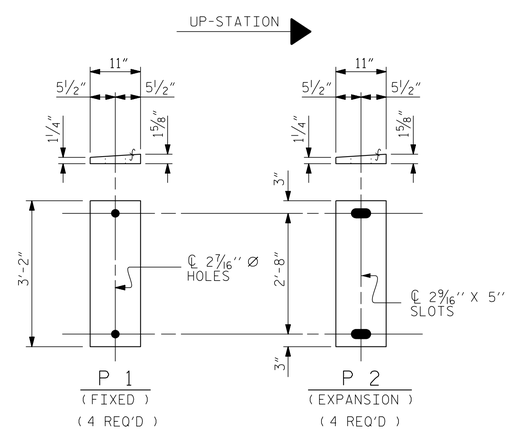

SOLE PLATE DETAILS ("P")

PROJECT NO. R-2582A

NORTHAMPTON COUNTY

STATION: 170+20.99 -L-

ENGINEER OF RECORD:

Gregory M. Gilland

NORTH CAROLINA PROFESSIONAL SEAL 37400 ENGINEER GREGORY M. GILLAND

9/12/2018

WETHERILL ENGINEERING

1223 Jones Franklin Rd.
Raleigh, N.C. 27606
Bus: 919 851 8077
Fax: 919 851 8107
LICENSE NO. F-0377

STATE OF NORTH CAROLINA
DEPARTMENT OF TRANSPORTATION
RALEIGH

STANDARD
ELASTOMERIC BEARING DETAILS
PRESTRESSED CONCRETE GIRDER SUPERSTRUCTURE (LEFT LANE)

REVISIONS						SHEET NO.
NO.	BY:	DATE:	NO.	BY:	DATE:	S1-11
1			3			TOTAL SHEETS
2			4			27

DOCUMENT NOT CONSIDERED FINAL UNLESS ALL SIGNATURES COMPLETED

ASSEMBLED BY : D. HODGE	DATE : 3/18		
CHECKED BY : B.C. HUNT	DATE : 3/18		
DRAWN BY : EEM 2/97	REV. 6/13	AAC/MAA	
CHECKED BY : VAP 2/97	REV. 1/15	MAA/TMG	
	REV. 12/17	MAA/THC	

P:\2018\18127.02 R-2582A\Structures\Site 1\DGN\STR1_LT_LN\R2582A_SMU_ BRG_650126.dgn
9/5/2018 3:56:35 PM

STD. NO. EB4 (SHT 1)

DocuSign Envelope ID: 7554F43B-51A1-4C68-9A41-7FB1BD88385F

NOTES:

#5 S1 AND S2 BARS MAY BE SHIFTED SLIGHTLY TO MAINTAIN 2"CLEAR TO EXPANSION JOINT IN RAIL.

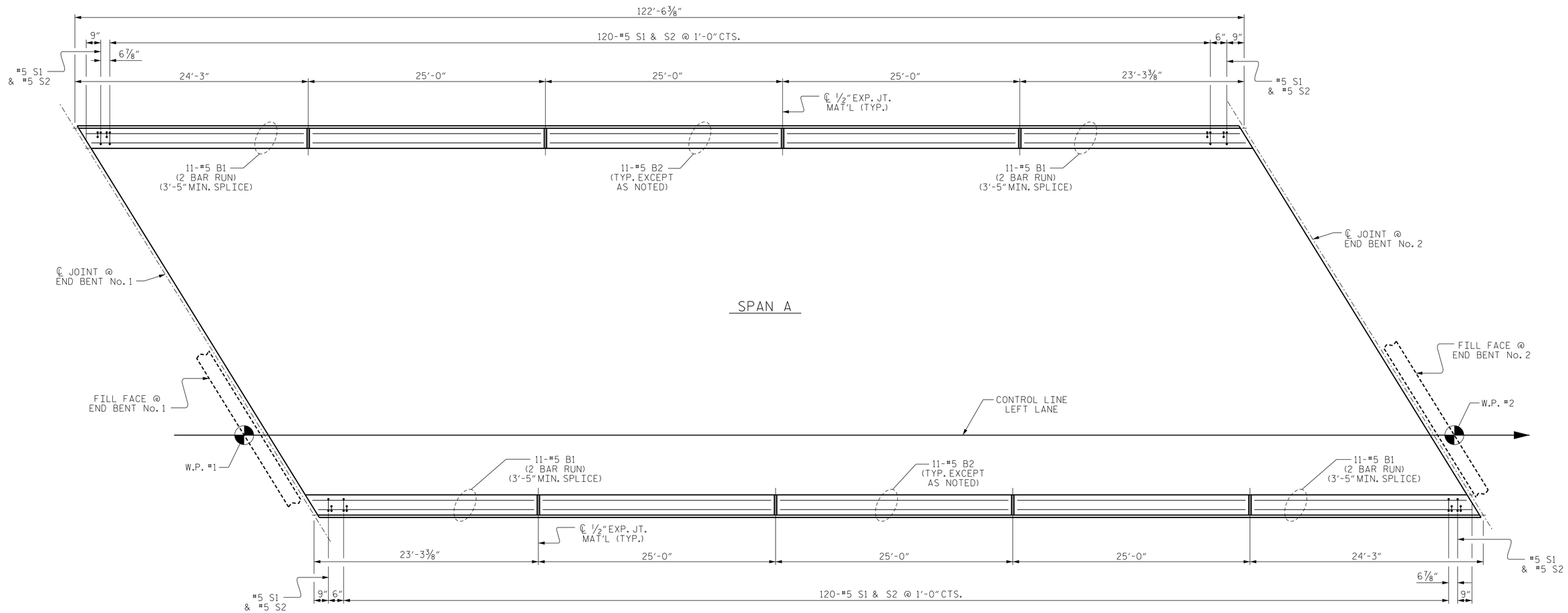

PLAN OF CONCRETE BARRIER RAIL

PROJECT NO. R-2582A
NORTHAMPTON COUNTY
STATION: 170+20.99 -L-

SHEET 1 OF 2

ENGINEER OF RECORD:
Gregory M. Gilland
NORTH CAROLINA PROFESSIONAL SEAL 37400 ENGINEER GREGORY M. GILLAND
9/12/2018

WETHERILL ENGINEERING
1223 Jones Franklin Rd.
Raleigh, N.C. 27606
Bus: 919 851 8077
Fax: 919 851 8107
LICENSE NO. F-0377

STATE OF NORTH CAROLINA
DEPARTMENT OF TRANSPORTATION
RALEIGH

CONCRETE BARRIER RAIL
(LEFT LANE)

REVISIONS						SHEET NO.
NO.	BY:	DATE:	NO.	BY:	DATE:	S1-12
1			3			TOTAL SHEETS
2			4			27

DOCUMENT NOT CONSIDERED FINAL UNLESS ALL SIGNATURES COMPLETED

DRAWN BY : D. HODGE DATE : 3/18
CHECKED BY : B.C. HUNT DATE : 3/18

P:\2018\18127.02 R-2582A\Structures\Site 1\DGN\STR1_LT\NR2582A_SMU_ CBR_650126.dgn
9/5/2018 3:57:57 PM

DocuSign Envelope ID: 7554F43B-51A1-4C68-9A41-7FB1BD88385F

NOTES

THE BARRIER RAIL IN EACH SPAN SHALL NOT BE CAST UNTIL ALL SLAB CONCRETE IN THAT SPAN HAS BEEN CAST AND HAS REACHED A MINIMUM COMPRESSIVE STRENGTH OF 3,000 PSI.

ALL REINFORCING STEEL IN BARRIER RAILS SHALL BE EPOXY COATED.

GROOVED CONTRACTION JOINTS, ½" IN DEPTH, SHALL BE TOOLED IN ALL EXPOSED FACES OF THE BARRIER RAIL AND IN ACCORDANCE WITH ARTICLE 825-10(B) OF THE STANDARD SPECIFICATIONS. THE CONTRACTION JOINT SHALL BE LOCATED AT EACH THIRD POINT BETWEEN BARRIER RAIL EXPANSION JOINTS. ONLY ONE CONTRACTION JOINT IS REQUIRED AT MIDPOINT OF BARRIER RAIL SEGMENTS LESS THAN 20 FEET IN LENGTH AND NO CONTRACTION JOINTS ARE REQUIRED FOR THOSE SEGMENTS LESS THAN 10 FEET IN LENGTH.

BAR TYPES

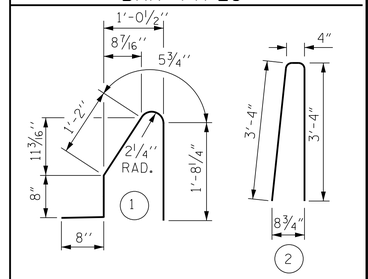

ALL BAR DIMENSIONS ARE OUT TO OUT

BILL OF MATERIAL

FOR CONCRETE BARRIER RAIL ONLY

BAR	NO.	SIZE	TYPE	LENGTH	WEIGHT
* S1	244	#5	1	4'-8"	1188
* S2	244	#5	2	7'-0"	1781
* B1	88	#5	STR	13'-7"	1247
* B2	66	#5	STR	24'-7"	1692

* EPOXY COATED REINFORCING STEEL	5,908 LBS.
CLASS AA CONCRETE	33.3 CU. YDS.
CONCRETE BARRIER RAIL	245.10 LIN. FT.

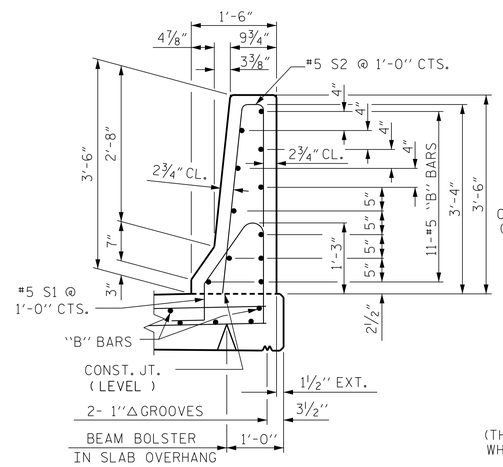

SECTION THRU RAIL

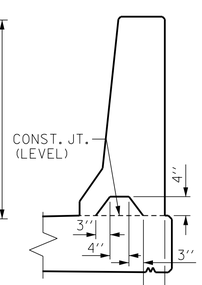

SECTION S-S

AT DAM IN OPEN JOINT (THIS IS TO BE USED ONLY WHEN SLIP FORM IS USED)

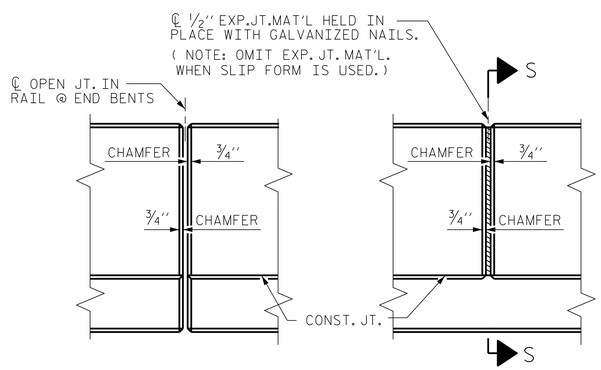

ELEVATION AT EXPANSION JOINTS

BARRIER RAIL DETAILS

PROJECT NO. R-2582A

NORTHAMPTON COUNTY

STATION: 170+20.99 -L-

SHEET 2 OF 2

ENGINEER OF RECORD:

Gregory M. Gilland

NORTH CAROLINA PROFESSIONAL SEAL 37400 ENGINEER GREGORY M. GILLAND

9/12/2018

WETHERILL ENGINEERING

1223 Jones Franklin Rd.
Raleigh, N.C. 27606
Bus: 919 851 8077
Fax: 919 851 8107
LICENSE NO. F-0377

STATE OF NORTH CAROLINA
DEPARTMENT OF TRANSPORTATION
RALEIGH

STANDARD

CONCRETE BARRIER RAIL

(LEFT LANE)

REVISIONS								SHEET NO.
NO.	BY:	DATE:	NO.	BY:	DATE:			S1-13
1			3					TOTAL SHEETS
2			4					27

DOCUMENT NOT CONSIDERED FINAL UNLESS ALL SIGNATURES COMPLETED

ASSEMBLED BY : D. HODGE		DATE :	3/18
CHECKED BY : B.C. HUNT		DATE :	3/18
DRAWN BY : ARB 5/87	REV. 7/12		MAA/GM
CHECKED BY : SJD 9/87	REV. 6/13		MAA/GM
	REV. 12/17		MAA/THC

P:\2018\18127.02 R-2582A\Structures\Site 1\DGN\STR1_LT_LN\R2582A_SMU_ CBR_650126.dgn
9/5/2018 3:59:12 PM

STD. NO. CBR1 (SHT 3)

DocuSign Envelope ID: 7554F43B-51A1-4C68-9A41-7FB1BD88385F

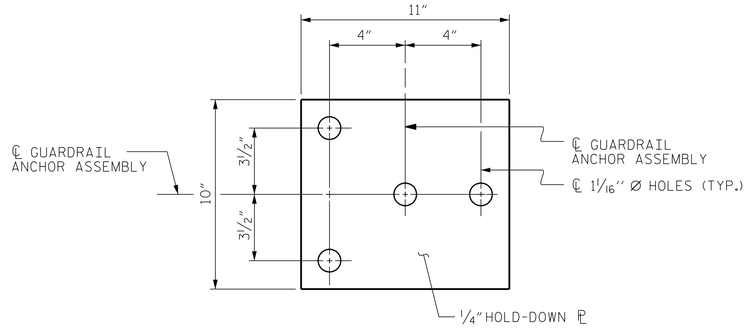

PLAN

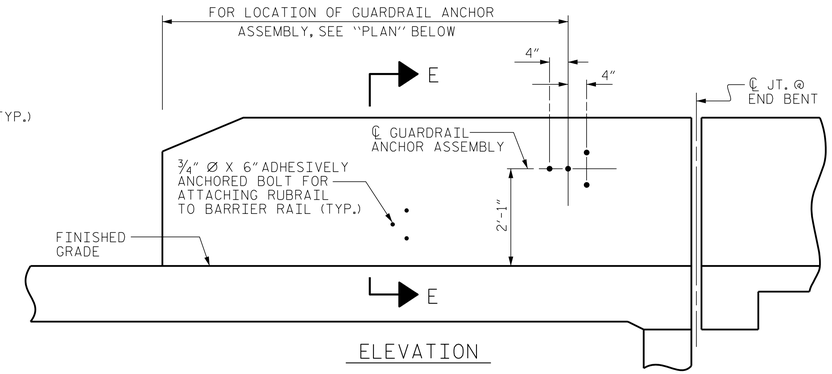

ELEVATION

NOTES

THE GUARDRAIL ANCHOR ASSEMBLY SHALL CONSIST OF A 1/4" HOLD-DOWN PLATE AND 4 - 7/8" Ø BOLTS WITH NUTS AND WASHERS, RUBRAIL, AND ADHESIVELY ANCHORED BOLTS.

THE HOLD-DOWN PLATE SHALL CONFORM TO AASHTO M270 GRADE 36. AFTER FABRICATION, THE HOLD-DOWN PLATE SHALL BE HOT-DIP GALVANIZED IN ACCORDANCE WITH AASHTO M111.

BOLTS SHALL CONFORM TO THE REQUIREMENTS OF ASTM A307 AND NUTS SHALL CONFORM TO THE REQUIREMENTS OF AASHTO M291. BOLTS, NUTS AND WASHERS SHALL BE GALVANIZED. (AT THE CONTRACTOR'S OPTION, STAINLESS STEEL BOLTS, NUTS AND WASHERS MAY BE USED AS AN ALTERNATE FOR THE 7/8" Ø GALVANIZED BOLTS, NUTS AND WASHERS. THEY SHALL CONFORM TO OR EXCEED THE MECHANICAL REQUIREMENTS OF ASTM A307. THE USE OF THIS ALTERNATE SHALL BE APPROVED BY THE ENGINEER.)

THE GUARDRAIL ANCHOR ASSEMBLY IS REQUIRED AT ALL POINTS WHERE APPROACH GUARDRAIL IS TO BE ATTACHED TO THE END OF BARRIER RAIL. FOR POINTS OF ATTACHMENT, SEE SKETCH.

AFTER INSTALLATION, THE EXPOSED THREAD OF THE BOLT SHALL BE BURRED WITH A SHARP POINTED TOOL.

THE COST OF THE GUARDRAIL ANCHOR ASSEMBLY SHALL BE INCLUDED IN THE UNIT CONTRACT PRICE BID FOR CONCRETE BARRIER RAIL.

THE 1 1/4" Ø HOLES SHALL BE FORMED OR DRILLED WITH A CORE BIT. IMPACT TOOLS WILL NOT BE PERMITTED. ANY CONCRETE DAMAGED BY THIS WORK SHALL BE REPAIRED TO THE SATISFACTION OF THE ENGINEER.

THE C6 X 8.2 RUBRAIL IS TO BE ADHESIVELY ANCHORED TO THE RAIL USING THREE 3/4" Ø X 6" BOLTS WITH WASHERS. LEVEL ONE FIELD TESTING IS REQUIRED, AND THE YIELD LOAD OF THE 3/4" Ø BOLT IS 12 KIPS. FOR ADHESIVELY ANCHORED ANCHOR BOLTS OR DOWELS, SEE STANDARD SPECIFICATIONS. SEE ROADWAY STANDARD 862.03 FOR DETAILS AND LOCATION OF THE RUBRAIL.

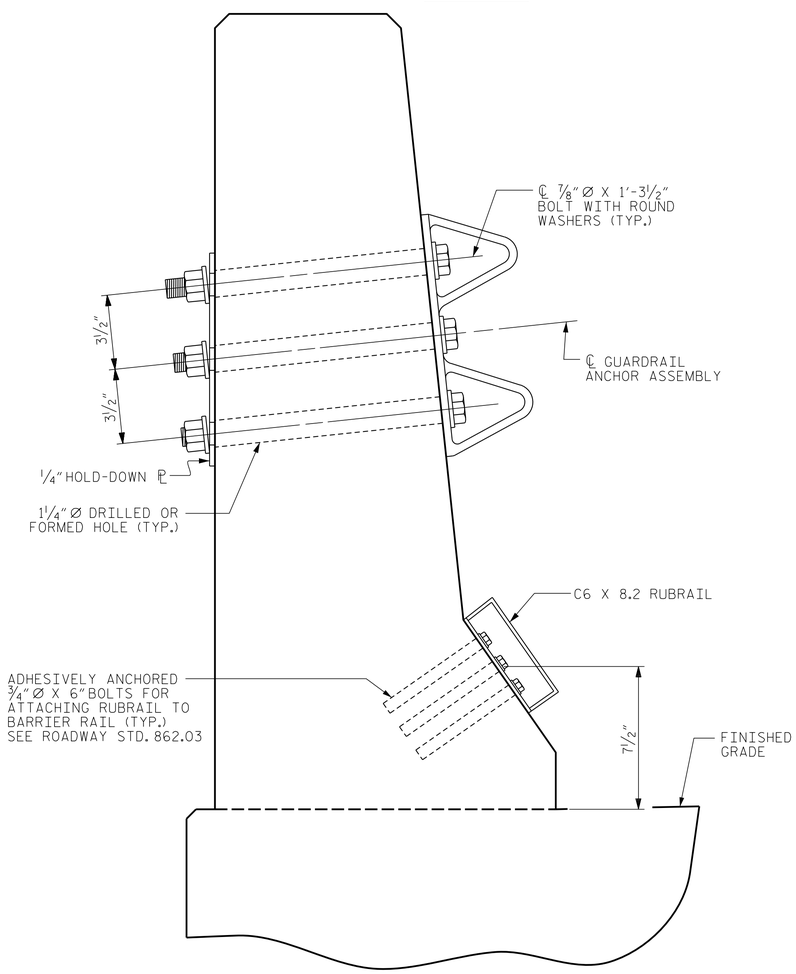

SECTION E-E

GUARDRAIL ANCHOR ASSEMBLY DETAILS

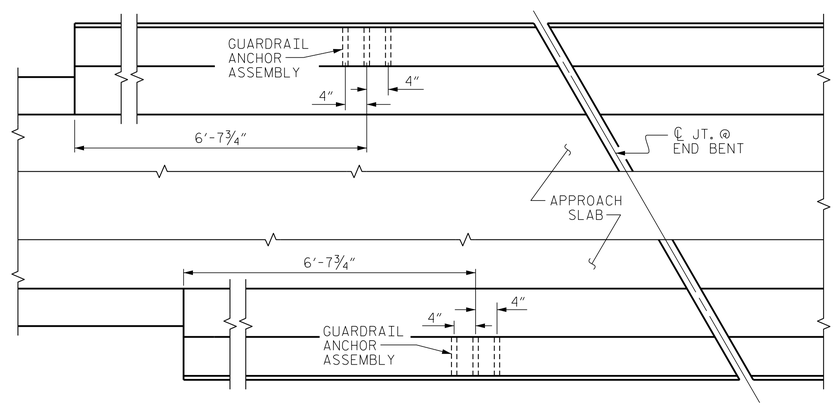

PLAN

LOCATION OF ANCHORS FOR GUARDRAIL

END BENT #1 SHOWN, END BENT #2 SIMILAR.

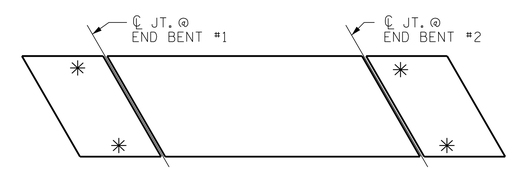

SKETCH SHOWING POINTS OF ATTACHMENTS

✳ DENOTES GUARDRAIL ANCHOR ASSEMBLY

PROJECT NO. R-2582A
NORTHAMPTON COUNTY
STATION: 170+20.99 -L-

ENGINEER OF RECORD:
Gregory M. Gilland
NORTH CAROLINA PROFESSIONAL SEAL 37400 ENGINEER GREGORY M. GILLAND
9/12/2018

WETHERILL ENGINEERING
1223 Jones Franklin Rd.
Raleigh, N.C. 27606
Bus: 919 851 8077
Fax: 919 851 8107
LICENSE NO. F-0377

STATE OF NORTH CAROLINA
DEPARTMENT OF TRANSPORTATION
RALEIGH

STANDARD
GUARDRAIL ANCHORAGE FOR BARRIER RAIL
(LEFT LANE)

REVISIONS						SHEET NO.
NO.	BY:	DATE:	NO.	BY:	DATE:	S1-14
1			3			TOTAL SHEETS
2			4			27

DOCUMENT NOT CONSIDERED FINAL UNLESS ALL SIGNATURES COMPLETED

ASSEMBLED BY : D. HODGE		DATE : 3/18	
CHECKED BY : B.C. HUNT		DATE : 3/18	
DRAWN BY : TLA 5/06	REV. 7/12		MAA/GM
CHECKED BY : GM 5/06	REV. 6/13		MAA/GM
	REV. 12/17		MAA/THC

P:\2018\18127.02_R-2582A\Structures\Site 1\DGN\STR1_LTLN\R2582A_SMU_GRA_650126.dgn
9/5/2018 4:13:52 PM

(SHT 3a) STD. NO. GRA2

DocuSign Envelope ID: 7554F43B-51A1-4C68-9A41-7FB1BD88385F

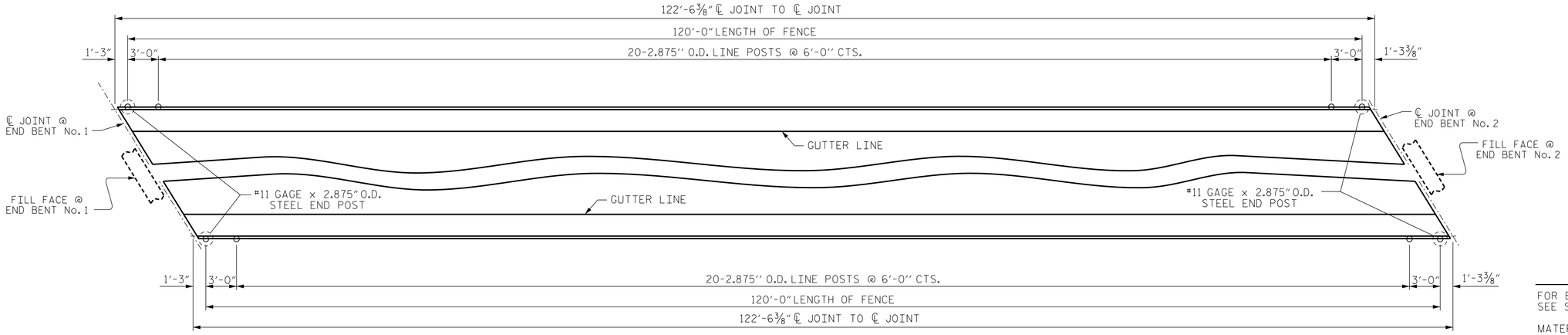

PLAN OF FENCE POST SPACING

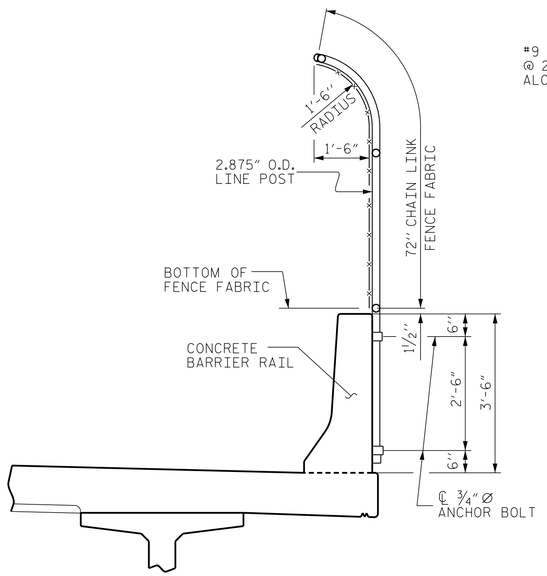

SECTION THRU FENCE

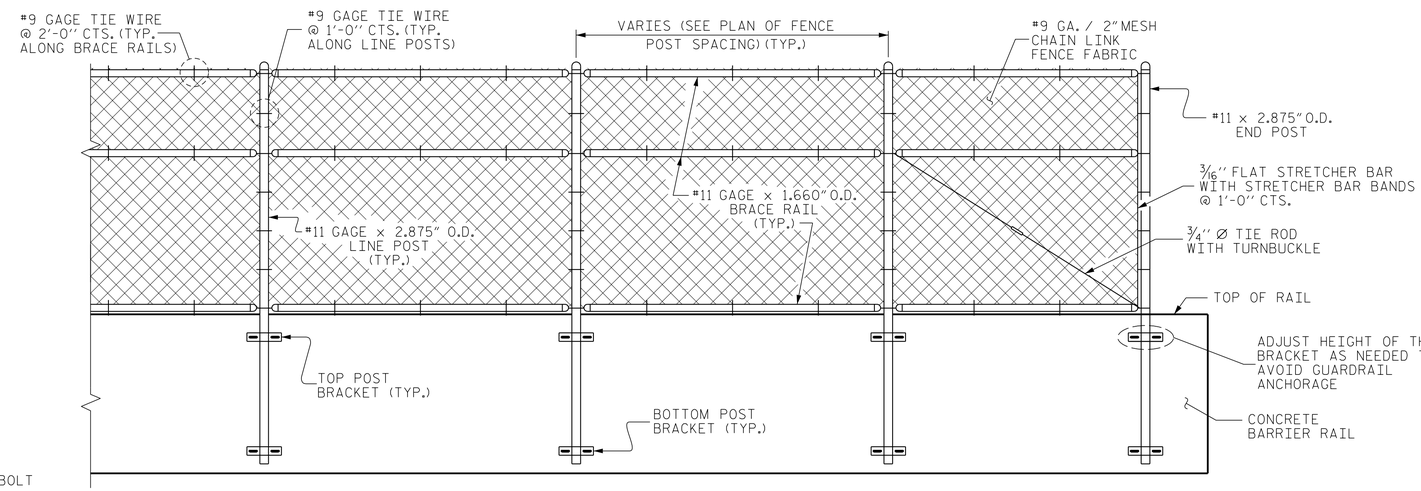

PARTIAL ELEVATION

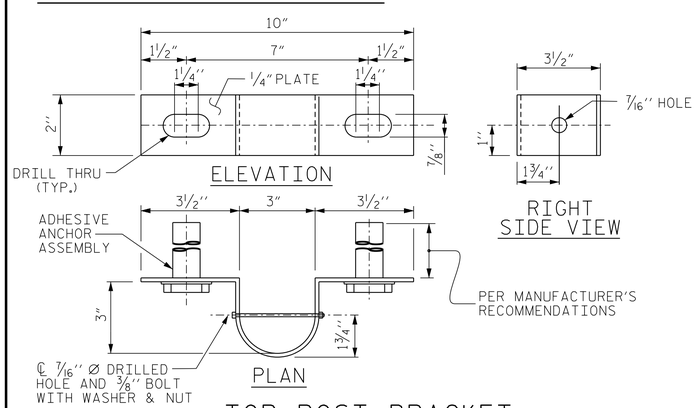

TOP POST BRACKET

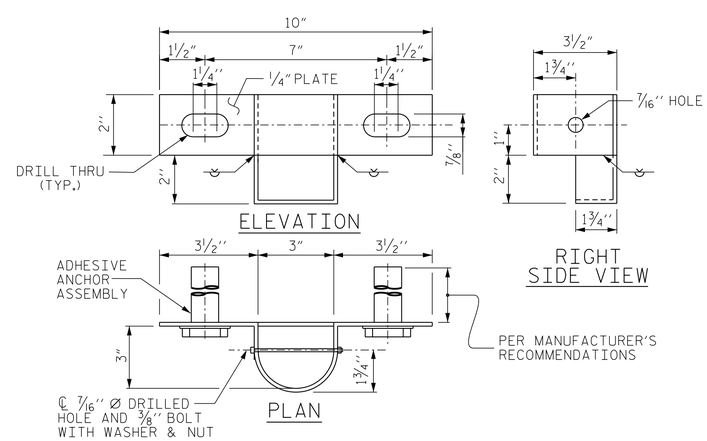

BOTTOM POST BRACKET

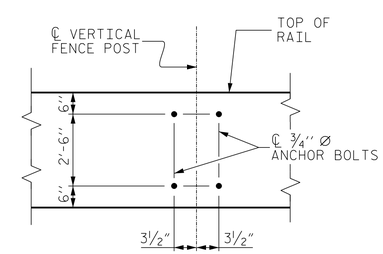

BOLT SETTING DETAIL

NOTES

FOR BRIDGE MOUNTED CHAIN LINK FENCE, SEE SPECIAL PROVISIONS.

MATERIAL FOR ANCHOR BOLTS SHALL BE TYPE 304 STAINLESS STEEL WITH A MINIMUM 9000 PSI ULTIMATE STRENGTH. NUTS AND WASHERS SHALL BE TYPE 304 STAINLESS STEEL. ANCHOR BOLTS SHALL BE EMBEDDED AS PER ADHESIVE BONDING SYSTEM MANUFACTURER SPECIFICATIONS. NUTS SHALL BE AMERICAN STANDARD FINISHED HEXAGON THICK NUTS, CLASS 2B THREADS.

FOR SETTING ANCHOR BOLTS, THE CONTRACTOR SHALL USE AN ADHESIVE BONDING SYSTEM. LEVEL ONE FIELD TESTING OF BONDING SYSTEM IS REQUIRED.

ALL FENCE MATERIAL SHALL MEET THE REQUIREMENTS OF SECTION 1050 OF THE STANDARD SPECIFICATIONS. VINYL COAT ALL STEEL PARTS AND HARDWARE IN ACCORANCE WITH ARTICLE 1050 OF THE STANDARD SPECIFICATIONS.

ALL FENCE COMPONENTS SHALL BE VINYL COATED - BLACK.

FENCE POST LOCATIONS SHALL BE SHIFTED, AS NECESSARY, TO MAINTAIN A 6" MINIMUM DISTANCE FROM ANCHOR BOLT TO JOINTS IN BARRIER RAIL.

WELDING SHALL BE DONE IN ACCORDANCE WITH ARTICLE 1072-20 OF STANDARD SPECIFICATIONS.

ADHESIVE BONDING SYSTEM SHALL HAVE MINIMUM PULLOUT STRENGTH OF 10 KIPS. THE ADHESIVE BONDING SYSTEM SHALL BE CHOSEN FROM THOSE ON THE NCDOT APPROVED PRODUCTS LIST.

72" CHAIN LINK FENCE
TOTAL PAY LENGTH 240.0 LIN. FT.

PROJECT NO. R-2582A
NORTHAMPTON COUNTY
STATION: 170+20.99 -L-

DRAWN BY : D. HODGE DATE : 8/18
CHECKED BY : T. KOCH DATE : 8/18

DOCUMENT NOT CONSIDERED FINAL UNLESS ALL SIGNATURES COMPLETED

ENGINEER OF RECORD:
Gregory M. Gilland
NORTH CAROLINA PROFESSIONAL SEAL 37400 ENGINEER GREGORY M. GILLAND
9/12/2018

WETHERILL ENGINEERING
1223 Jones Franklin Rd.
Raleigh, N.C. 27606
Bus: 919 851 8077
Fax: 919 851 8107
LICENSE NO. F-0377

STATE OF NORTH CAROLINA
DEPARTMENT OF TRANSPORTATION
RALEIGH

BRIDGE MOUNTED CHAIN LINK FENCE DETAILS

(LEFT LANE)

REVISIONS						SHEET NO.
NO.	BY:	DATE:	NO.	BY:	DATE:	S1-15
1			3			TOTAL SHEETS
2			4			27

P:\2018\18127.02_R-2582A\Structures\Site 1\DGN\STR1_LT_LN\R2582A_SMU_CLF_650126.dgn
9/5/2018 4:02:08 PM

DocuSign Envelope ID: 7554F43B-51A1-4C68-9A41-7FB1BD88385F

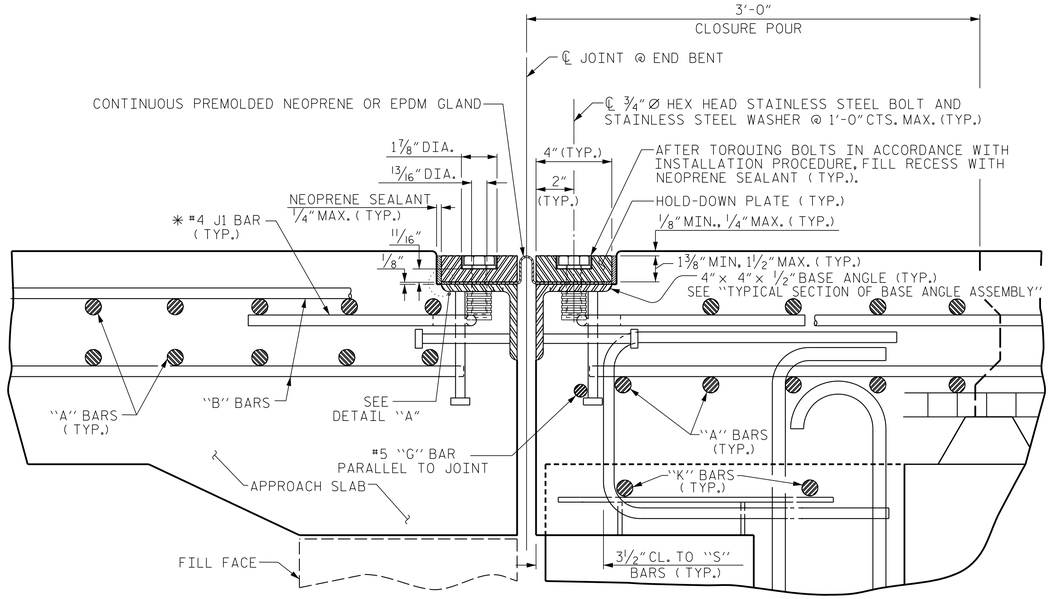

EXPANSION JOINT DETAILS

SECTION NORMAL TO JOINT -- PRESTRESSED GIRDER SUPERSTRUCTURE

✳ THE QUANTITY OF #4 J1 BARS ON THE BILL OF MATERIAL IS BASED ON 1'-0" CENTERS. J1 BARS SHALL BE PLACED AT EACH VERTICAL STUD ANCHOR BOLT. IN THE EVENT THAT THE NUMBER OF VERTICAL STUD ANCHORS EXCEEDS THE NUMBER OF J1 BARS SPECIFIED, ADDITIONAL J1 BARS WILL NOT BE REQUIRED.

INSTALLATION PROCEDURE

1. A TEMPLATE OR OTHER SUITABLE DEVICE SHALL BE USED TO FORM THE TOP OF THE EXPANSION JOINT SEAL BLOCKOUT TO THE PROPER DEPTH AND WIDTH. THE TEMPLATE SHALL BE 4 1/8" TO 4 1/4" WIDE AND OF SUCH THICKNESS AS TO PROVIDE FOR CORRECT FINAL ELEVATION OF TOP OF HOLD-DOWN PLATES. THE TEMPLATE SHALL BE ATTACHED TO THE BASE ANGLE ASSEMBLY WITH THE 3/4" Ø HEX HEAD BOLTS PROVIDED FOR THE HOLD-DOWN PLATES. A 1" Ø HOLE SHALL BE PROVIDED IN THE TEMPLATE CENTERED OVER EACH WEEP HOLE IN THE 4" X 4" X 1/2" BASE ANGLE. OTHER METHODS OF INSURING DRAINAGE THROUGH WEEP HOLES MAY BE EMPLOYED SUBJECT TO ENGINEER'S APPROVAL.
2. AFTER THE CONCRETE HAS BEEN CAST ON BOTH SIDES OF THE JOINT, REMOVE THE TEMPLATE. THOROUGHLY CLEAN THE BOLT HOLES AND THE ANGLE PLATE. REMOVE ANY EXCESS CONCRETE THAT COMES OUT OF THE WEEP HOLES. ANY DAMAGED STEEL SHALL BE REPAIRED IN ACCORDANCE WITH THE SPECIAL PROVISION FOR THERMAL SPRAYED COATINGS (METALLIZATION).
3. LAY THE GLAND ON THE BASE ANGLE AND FIELD MARK THE GLAND FOR THE BOLT HOLES. HOLES IN THE GLAND SHALL BE PUNCHED 7/8" IN DIAMETER WITH A HAND PUNCH.
4. IN ORDER TO CHECK FOR PROPER ALIGNMENT, PLACE THE GLAND AND HOLD-DOWN PLATES ON THE BASE ANGLE. DO NOT APPLY NEOPRENE SEALANT. BOLT THE HOLD-DOWN PLATES TO THE BASE ANGLE BUT DO NOT TIGHTEN. THE ENGINEER SHALL INSPECT THE JOINT SEAL DEVICE FOR PROPER ALIGNMENT.
5. AFTER INSPECTION, REMOVE THE HOLD-DOWN PLATES AND GLAND. APPLY NEOPRENE SEALANT TO THE BASE ANGLE IN ACCORDANCE WITH THE "INSTALLATION SKETCH". PLACE GLAND AND HOLD-DOWN PLATES ON THE BASE ANGLE. BOLT THE HOLD-DOWN PLATES TO THE BASE ANGLE ASSEMBLY AND TORQUE THE BOLTS TO 88 FT-LBS WITH A TORQUE WRENCH. CHECK THE TORQUE AFTER THREE (3) HOURS AND, IF NECESSARY, RETIGHTEN TO 88 FT-LBS. A FINAL CHECK SHALL BE MADE AT SEVEN (7) DAYS. TORQUE SHALL NOT BE LESS THAN 80 FT-LBS AFTER SEVEN (7) DAYS.
6. AFTER PROPER TORQUING, CLEAN THE BOLT HOLE RECESSES, THE RECESS BETWEEN THE JOINT SEAL DEVICE AND CONCRETE, AND THE LIFTING HOLES IN THE HOLD-DOWN PLATE, AND COMPLETELY FILL THE RECESSES AND LIFTING HOLES WITH NEOPRENE SEALANT.

GENERAL NOTES

1. FOR EXPANSION JOINT SEALS, SEE SPECIAL PROVISIONS.
2. ALL PLATES AND ANGLES SHALL CONFORM TO AASHTO M270 GRADE 36 STEEL OR APPROVED EQUAL. ALL HOLD-DOWN BOLTS SHALL CONFORM TO ASTM F593 ALLOY 304 STAINLESS STEEL AND WASHERS SHALL CONFORM TO ASTM F844 EXCEPT THEY SHALL BE MADE FROM ALLOY 304 STAINLESS STEEL. ALL STUD ANCHORS SHALL CONFORM TO AASHTO M169, GRADES 1010 THRU 1020 OR APPROVED EQUAL. ALL CONCRETE INSERTS SHALL BE CLOSED END AND SHALL CONFORM TO AASHTO M169, GRADE 12L14. TENSILE CAPACITY SHALL BE 3000 LBS. MINIMUM.
3. A PREMOLDED CORRUGATED OR NON-CORRUGATED GLAND SHALL BE USED FOR JOINTS SKEWED BETWEEN 50° THRU 130°. FOR JOINTS SKEWED LESS THAN 50° OR MORE THAN 130°, ONLY A CORRUGATED GLAND SHALL BE USED.
4. CLOSED END FERRULES AND STUD ANCHORS SHALL BE SHOP WELDED AND ALL HOLES SHALL BE SHOP DRILLED AS SHOWN ON PLANS. STUD ANCHORS SHALL BE ELECTRIC ARC END WELDED WITH COMPLETE FUSION.
5. SURFACES COMING IN CONTACT WITH NEOPRENE SHALL BE GROUND SMOOTH PRIOR TO METALLIZING.
6. UPON COMPLETION OF SHOP FABRICATION, THE HOLD-DOWN PLATE AND BASE ANGLE ASSEMBLY, AS SHOWN IN THE "TYPICAL SECTION OF BASE ANGLE ASSEMBLY", SHALL BE METALLIZED IN ACCORDANCE WITH THE STANDARD SPECIFICATIONS. FOR THERMAL SPRAYED COATINGS (METALLIZATION), SEE SPECIAL PROVISIONS.
7. THE COVER PLATES SHALL BE GALVANIZED OR METALLIZED IN ACCORDANCE WITH THE STANDARD SPECIFICATIONS. FOR THERMAL SPRAYED COATINGS (METALLIZATION), SEE SPECIAL PROVISIONS.
8. BASE ANGLE ASSEMBLY SHALL BE CONTINUOUS FOR THE LENGTH OF THE JOINT. AT CROWN BREAKS, THE ENDS OF THE BASE ANGLE ASSEMBLY SHALL BE CUT PARALLEL TO THE BRIDGE CENTERLINE FOR SKEWS LESS THAN 80° AND GREATER THAN 100°. FINISHED WELD SHALL BE REPAIRED IN ACCORDANCE WITH THE SPECIAL PROVISION FOR THERMAL SPRAYED COATINGS (METALLIZATION).
9. FIELD SPLICES OF HOLD-DOWN PLATES SHALL BE KEPT TO A MINIMUM. CONTRACTOR SHALL FURNISH DETAILED PLANS SHOWING PROPOSED SPLICE LOCATIONS FOR APPROVAL. HOLD-DOWN PLATES SHALL NOT EXCEED 20' LENGTHS UNLESS APPROVED BY THE ENGINEER.
10. NO ALTERNATE JOINT DETAILS SHALL BE PERMITTED IN LIEU OF THOSE SHOWN ON THESE PLANS.
11. THE CONTRACTOR MAY, AT HIS OPTION, USE ADHESIVELY ANCHORED ANCHOR BOLTS IN PLACE OF CONCRETE INSERTS FOR COVER PLATES. THE YIELD LOAD OF THE 3/4" Ø BOLT IS 10 KIPS. FIELD TESTING OF THE ADHESIVE BONDING SYSTEM IS NOT REQUIRED.
12. THE FABRICATOR SHALL PROVIDE 1/2" Ø THREADED HOLES IN THE HOLD-DOWN PLATES TO ASSIST IN LIFTING AND PLACING. THE HOLES SHALL BE 3/4" DEEP AT 6'-0" MAXIMUM SPACING AND A MINIMUM OF TWO HOLES PER PLATE.

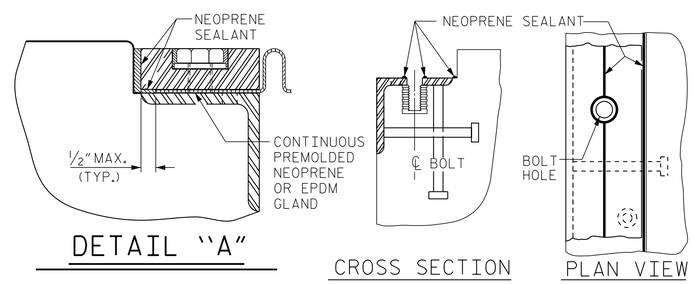

DETAIL "A"

CROSS SECTION PLAN VIEW

INSTALLATION SKETCH

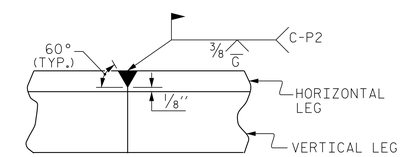

DETAIL- FIELD WELD SPLICE OF BASE ANGLE

MOVEMENT AND SETTING AT JOINT					
END BENT NO.	SKEW ANGLE	TOTAL MOVEMENT (ALONG ℄ RDWY)	PERPENDICULAR JOINT OPENING AT 45° F	PERPENDICULAR JOINT OPENING AT 60° F	PERPENDICULAR JOINT OPENING AT 90° F
1	58°-15'-25"	0	1"	1"	1"
2	58°-15'-25"	3/4"	1 7/16"	1 3/8"	1 1/8"

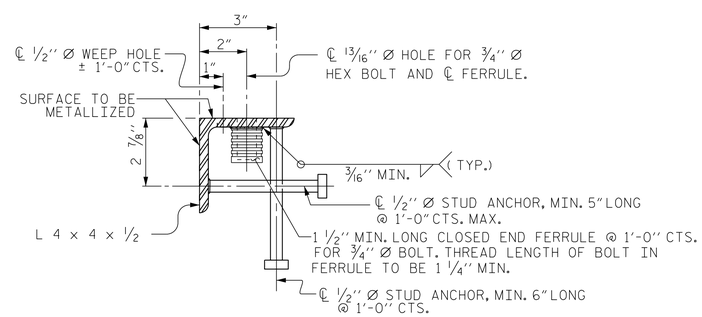

TYPICAL SECTION OF BASE ANGLE ASSEMBLY

PROJECT NO. R-2582A

NORTHAMPTON COUNTY

STATION: 170+20.99 -L-

SHEET 1 OF 2

ENGINEER OF RECORD:

Gregory M. Gilland

NORTH CAROLINA PROFESSIONAL SEAL 37400 ENGINEER GREGORY M. GILLAND

9/12/2018

WETHERILL ENGINEERING

1223 Jones Franklin Rd.
Raleigh, N.C. 27606
Bus: 919 851 8077
Fax: 919 851 8107
LICENSE NO. F-0377

STATE OF NORTH CAROLINA
DEPARTMENT OF TRANSPORTATION
RALEIGH

STANDARD

EXPANSION JOINT SEAL DETAILS

(LEFT LANE)

REVISIONS						SHEET NO.
NO.	BY:	DATE:	NO.	BY:	DATE:	S1-16
1			3			TOTAL SHEETS
2			4			27

DOCUMENT NOT CONSIDERED FINAL UNLESS ALL SIGNATURES COMPLETED

ASSEMBLED BY : D. HODGE		DATE : 8/18	
CHECKED BY : T. KOCH		DATE : 8/18	
DRAWN BY : REK 9/87	REV. 10/11/11	MAA/GM	
CHECKED BY : CRK 10/87	REV. 10/17	MAA/THC	
	REV. 6/18	MAA/THC	

P:\2018\18127.02 R-2582A\Structures\Site 1\DGN\STR1_LTLN\R2582A_SMU_ JS_650126.dgn
9/5/2018 4:16:22 PM

STD. NO. EJS1 (SHT 1)

DocuSign Envelope ID: 7554F43B-51A1-4C68-9A41-7FB1BD88385F

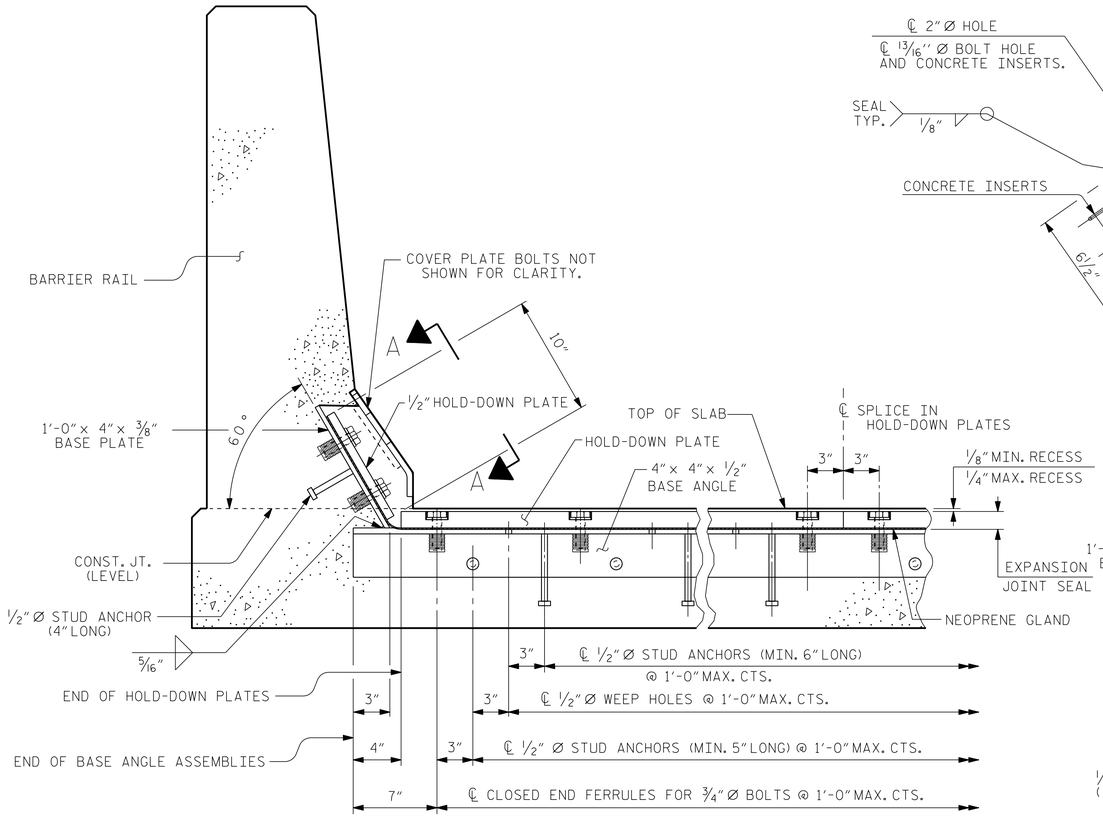

SECTION THRU RAIL NORMAL TO JOINT

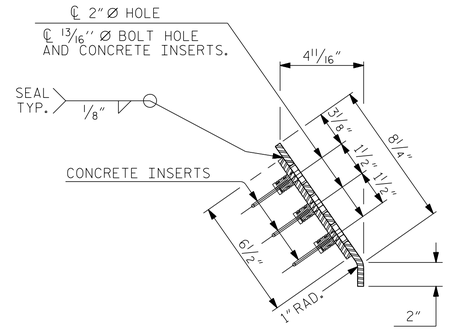

END VIEW

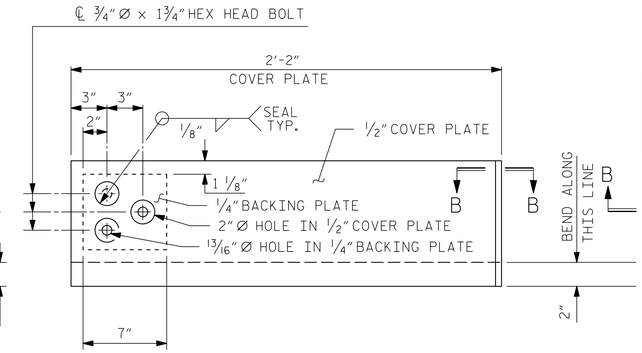

TYPE I - ELEVATION VIEW

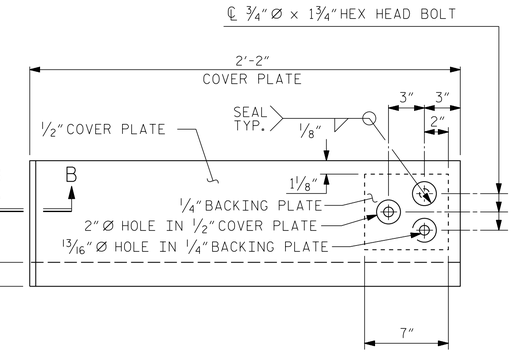

TYPE II - ELEVATION VIEW

COVER PLATE DETAILS

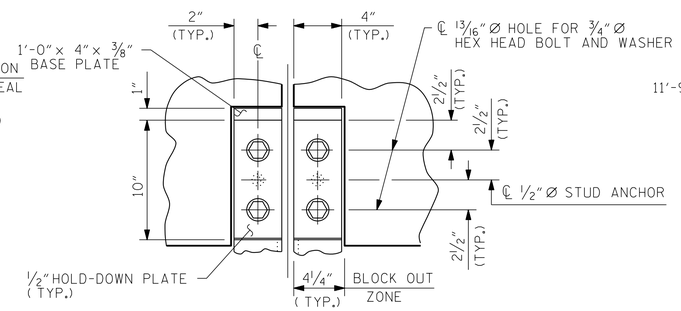

SECTION A - A

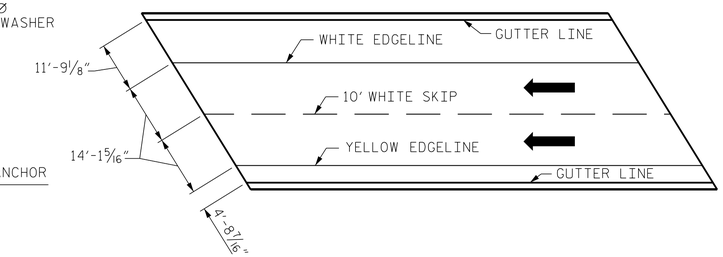

PAVEMENT MARKING ALIGNMENT

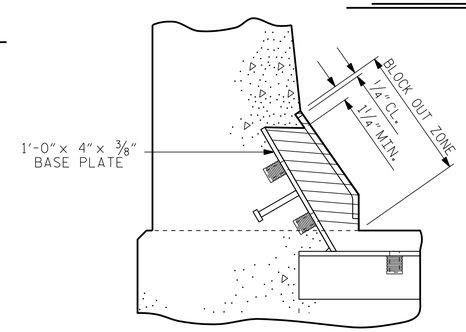

BLOCK OUT DETAIL

SEE " SECTION A - A " FOR OTHER DETAILS.

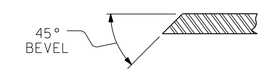

SECTION B - B

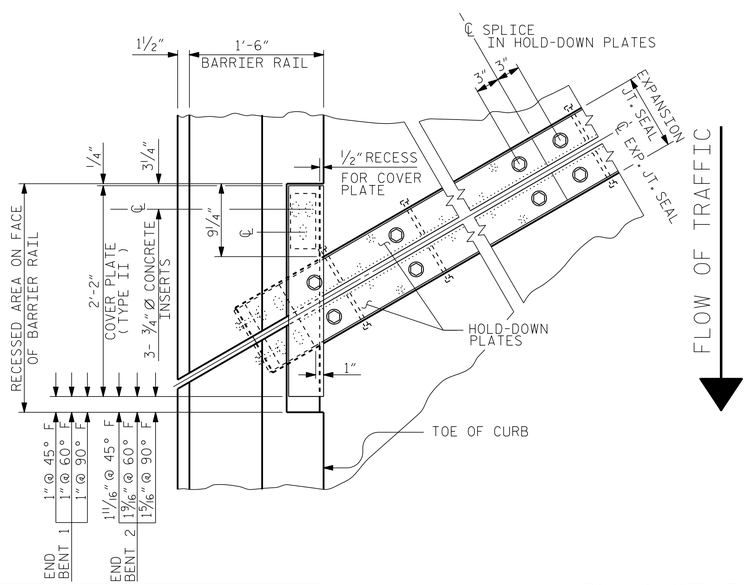

FLOW OF TRAFFIC

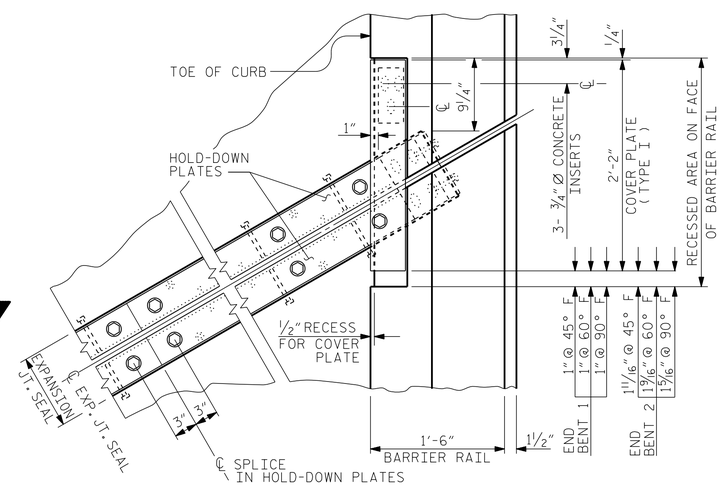

PLAN OF EXPANSION JOINT SEAL

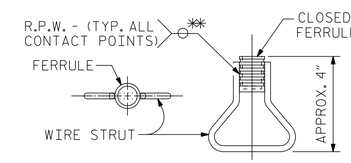

PLAN ELEVATION

CONCRETE INSERT

** EACH WELDED ATTACHMENT OF WIRE TO FERRULE SHALL DEVELOP THE TENSILE STRENGTH OF THE WIRE.

PROJECT NO. R-2582A
NORTHAMPTON COUNTY
STATION: 170+20.99 -L-

SHEET 2 OF 2

ENGINEER OF RECORD:
Gregory M. Gilland
NORTH CAROLINA PROFESSIONAL SEAL 37400 ENGINEER GREGORY M. GILLAND
9/12/2018

WETHERILL ENGINEERING
1223 Jones Franklin Rd.
Raleigh, N.C. 27606
Bus: 919 851 8077
Fax: 919 851 8107
LICENSE NO. F-0377

STATE OF NORTH CAROLINA
DEPARTMENT OF TRANSPORTATION
RALEIGH

STANDARD
EXPANSION JOINT SEAL DETAILS FOR BARRIER RAIL
(LEFT LANE)

REVISIONS						SHEET NO.
NO.	BY:	DATE:	NO.	BY:	DATE:	S1-17
1			3			TOTAL SHEETS
2			4			27

ASSEMBLED BY : D. HODGE		DATE : 8/18	
CHECKED BY : T. KOCH		DATE : 8/18	
DRAWN BY : REK 9/87	REV. 7/12	MAA/GM	
CHECKED BY : CRK 10/87	REV. 6/13	MAA/GM	
	REV. 12/17	MAA/THC	

DOCUMENT NOT CONSIDERED FINAL UNLESS ALL SIGNATURES COMPLETED

P:\2018\181272\02 R-2582A\Structures\Site 1\DGN\STR1_LT\NR2582A_SMU_ JS_650126.dgn
9/5/2018 4:17:10 PM

STD. NO. EJS2 SHT 3a

DocuSign Envelope ID: 7554F43B-51A1-4C68-9A41-7FB1BD88385F

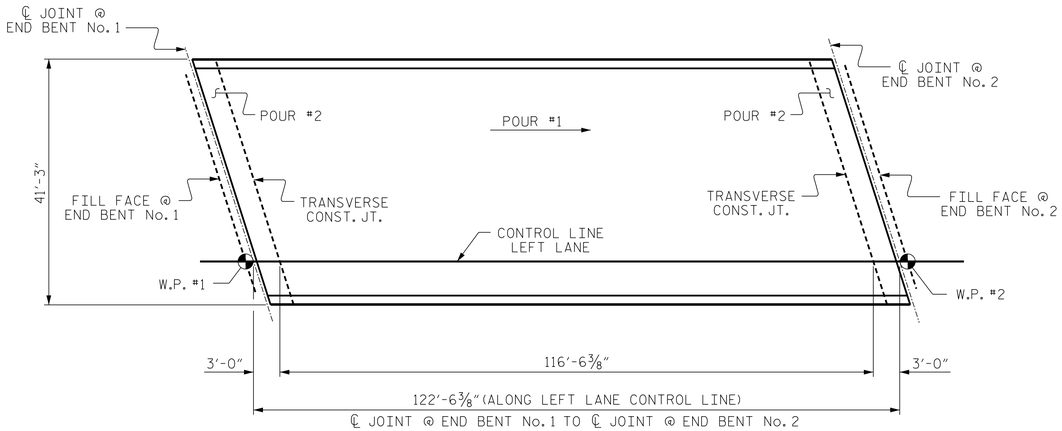

POUR SEQUENCE SKETCH

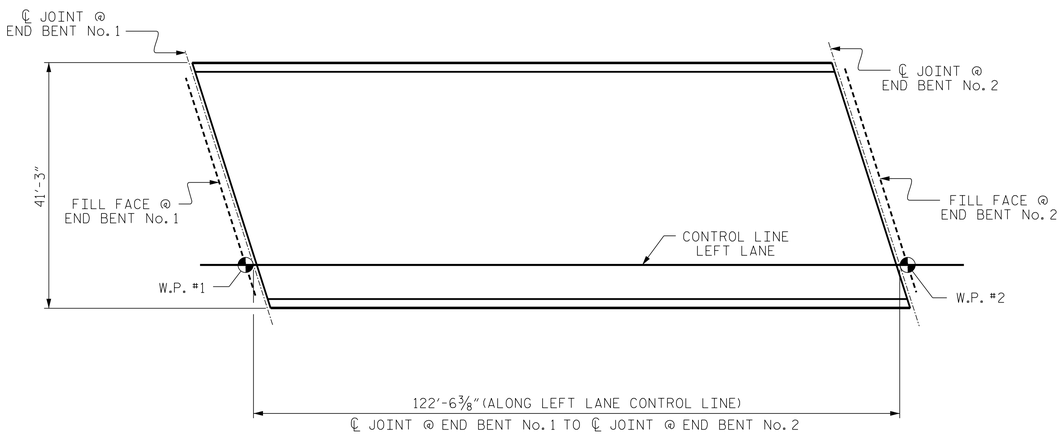

LAYOUT FOR COMPUTING AREA
REINFORCED CONCRETE DECK SLAB
(SQ. FT. = 5,054)

SUPERSTRUCTURE REINFORCING STEEL LENGTHS ARE BASED ON THE FOLLOWING MINIMUM SPLICE LENGTHS					
BAR SIZE	SUPERSTRUCTURE EXCEPT APPROACH SLABS, PARAPET, AND BARRIER RAIL		APPROACH SLABS		PARAPET AND BARRIER RAIL
	EPOXY COATED	UNCOATED	EPOXY COATED	UNCOATED	
#4	2'-0"	1'-9"	2'-0"	1'-9"	2'-9"
#5	2'-6"	2'-2"	2'-6"	2'-2"	3'-5"
#6	3'-0"	2'-7"	3'-10"	2'-7"	4'-4"
#7	5'-3"	3'-6"			
#8	6'-10"	4'-7"			

BAR TYPES

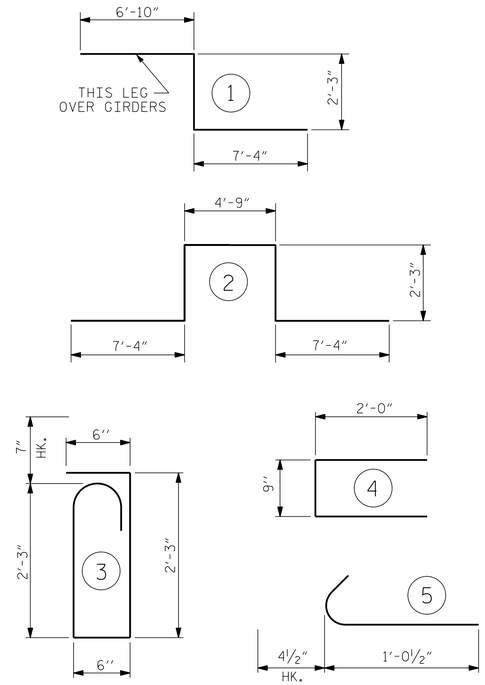

ALL BAR DIMENSIONS ARE OUT TO OUT

SUPERSTRUCTURE BILL OF MATERIAL

	CLASS AA CONCRETE	REINFORCING STEEL	* EPOXY COATED REINFORCING STEEL
	(CU. YDS.)	(LBS.)	(LBS.)
TOTALS**	170.0	13,660	13,031

** QUANTITIES FOR BARRIER RAIL ARE NOT INCLUDED

BILL OF MATERIAL

BAR	NO.	SIZE	TYPE	LENGTH	WEIGHT
* A1	166	#5	STR	40'-11"	7084
A2	166	#5	STR	40'-11"	7084
* A3	6	#6	STR	19'-0"	171
* A101	6	#5	STR	38'-5"	240
* A102	6	#5	STR	35'-8"	223
* A103	6	#5	STR	32'-10"	205
* A104	6	#5	STR	30'-0"	188
* A105	6	#5	STR	27'-2"	170
* A106	6	#5	STR	24'-4"	152
* A107	6	#5	STR	21'-6"	135
* A108	6	#5	STR	18'-8"	117
* A109	6	#5	STR	15'-10"	99
* A110	6	#5	STR	13'-0"	81
* A111	6	#5	STR	10'-2"	64
* A112	6	#5	STR	7'-4"	46
* A113	6	#5	STR	4'-6"	28
A201	6	#5	STR	38'-5"	240
A202	6	#5	STR	35'-8"	223
A203	6	#5	STR	32'-10"	205
A204	6	#5	STR	30'-0"	188
A205	6	#5	STR	27'-2"	170
A206	6	#5	STR	24'-4"	152
A207	6	#5	STR	21'-6"	135
A208	6	#5	STR	18'-8"	117
A209	6	#5	STR	15'-10"	99
A210	6	#5	STR	13'-0"	81
A211	6	#5	STR	10'-2"	64
A212	6	#5	STR	7'-4"	46
A213	6	#5	STR	4'-6"	28
* B1	145	#4	STR	26'-1"	2526
B2	105	#5	STR	42'-2"	4618
* G1	2	#5	STR	48'-1"	100
* J1	88	#4	5	1'-5"	83
* K1	8	#8	1	16'-5"	351
* K2	8	#8	2	23'-11"	511
K3	18	#6	STR	7'-9"	210
* S1	48	#4	4	4'-9"	152
* S2	48	#5	3	6'-1"	305

REINFORCING STEEL	LBS.	13,660
* EPOXY COATED REINFORCING STEEL	LBS.	13,031

* THESE BARS ARE EPOXY COATED.

POUR SEQUENCE BREAKDOWN	
SPAN A	CLASS AA CONCRETE (C.Y.)
POUR #1	142.5
POUR #2	27.5
TOTAL **	170.0

** QUANTITIES FOR BARRIER RAIL ARE NOT INCLUDED

GROOVING BRIDGE FLOORS	
APPROACH SLABS	1,657 SQ.FT.
BRIDGE DECK	4,234 SQ.FT.
TOTAL	5,891 SQ.FT.

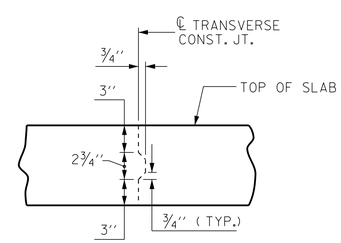

TRANSVERSE CONSTRUCTION JOINT DETAIL

NOTE: REINFORCING STEEL IN SLAB NOT SHOWN.
LONGITUDINAL REINFORCING STEEL SHALL BE CONTINUOUS THRU JOINT

PROJECT NO. R-2582A
NORTHAMPTON COUNTY
STATION: 170+20.99 -L-

ENGINEER OF RECORD:
Gregory M. Gilland
NORTH CAROLINA PROFESSIONAL SEAL 37400 ENGINEER GREGORY M. GILLAND
9/12/2018
WETHERILL ENGINEERING
1223 Jones Franklin Rd.
Raleigh, N.C. 27606
Bus: 919 851 8077
Fax: 919 851 8107
LICENSE NO. F-0377

STATE OF NORTH CAROLINA
DEPARTMENT OF TRANSPORTATION
RALEIGH

SUPERSTRUCTURE
BILL OF MATERIAL
(LEFT LANE)

REVISIONS						SHEET NO.
NO.	BY:	DATE:	NO.	BY:	DATE:	S1-18
1			3			TOTAL SHEETS
2			4			27

DOCUMENT NOT CONSIDERED FINAL UNLESS ALL SIGNATURES COMPLETED

DRAWN BY : D. HODGE DATE : 3/18
CHECKED BY : B.C. HUNT DATE : 3/18

P:\2018\18127.02 R-2582A\Structures\Site 1\DGN\STR1_LTLN\R2582A_SMU_ BM_650126.dgn
9/5/2018 3:54:35 PM

DocuSign Envelope ID: 7554F43B-51A1-4C68-9A41-7FB1BD88385F

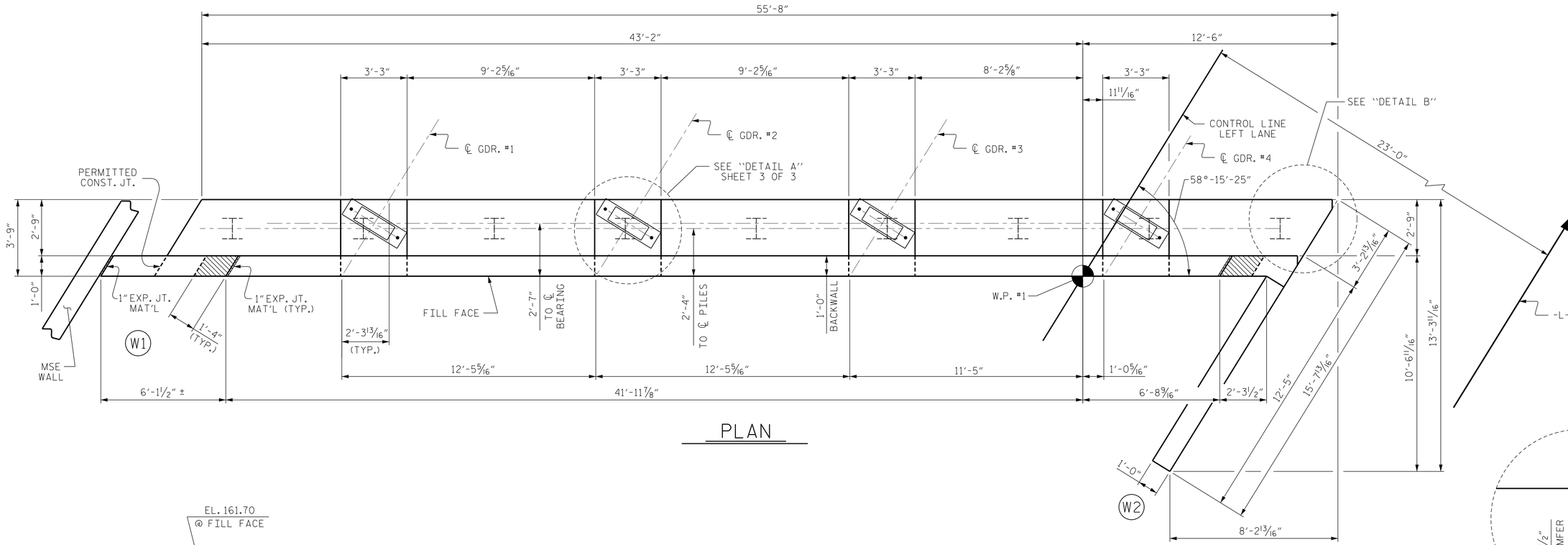

PLAN

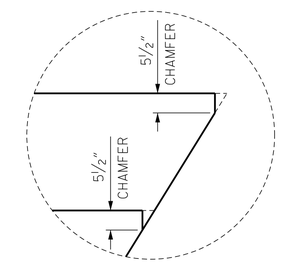

DETAIL "B"

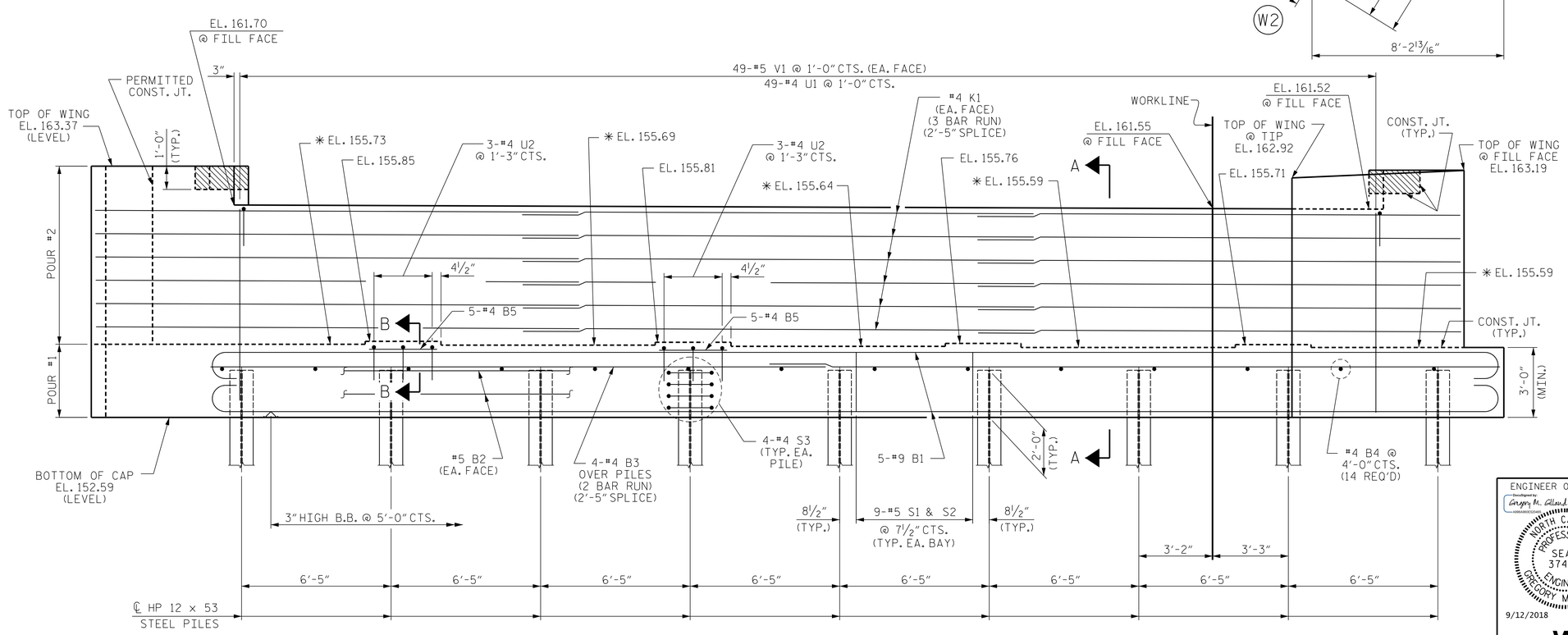

ELEVATION

✳ FOR LOCATION OF ELEVATIONS BETWEEN BRIDGE SEAT BUILD-UPS. SEE SECTION A-A, SHEET 3 OF 3.

PROJECT NO. R-2582A
NORTHAMPTON COUNTY
STATION: 170+20.99 -L-

SHEET 1 OF 3

ENGINEER OF RECORD:
Gregory M. Gilland
NORTH CAROLINA PROFESSIONAL SEAL 37400 ENGINEER GREGORY M. GILLAND
9/12/2018

WETHERILL ENGINEERING
1223 Jones Franklin Rd.
Raleigh, N.C. 27606
Bus: 919 851 8077
Fax: 919 851 8107
LICENSE NO. F-0377

STATE OF NORTH CAROLINA
DEPARTMENT OF TRANSPORTATION
RALEIGH

SUBSTRUCTURE
END BENT No. 1
LEFT LANE

REVISIONS						SHEET NO.
NO.	BY:	DATE:	NO.	BY:	DATE:	S1-19
1			3			TOTAL SHEETS
2			4			27

DRAWN BY : D. HODGE DATE : 5/18
CHECKED BY : G.M. GILLAND DATE : 5/18

DOCUMENT NOT CONSIDERED FINAL UNLESS ALL SIGNATURES COMPLETED

P:\2018\18127.02 R-2582A\Structures\Site 1\DGN\STR1_LT_LN\R2582A_SMU_ EBT_650126.dgn
9/5/2018 4:03:44 PM

DocuSign Envelope ID: 7554F43B-51A1-4C68-9A41-7FB1BD88385F

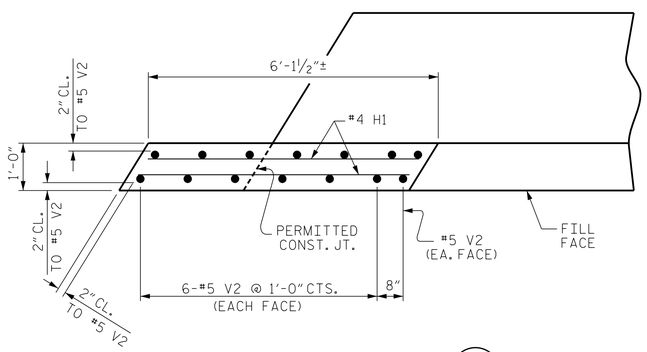

PLAN OF WING - (W1)

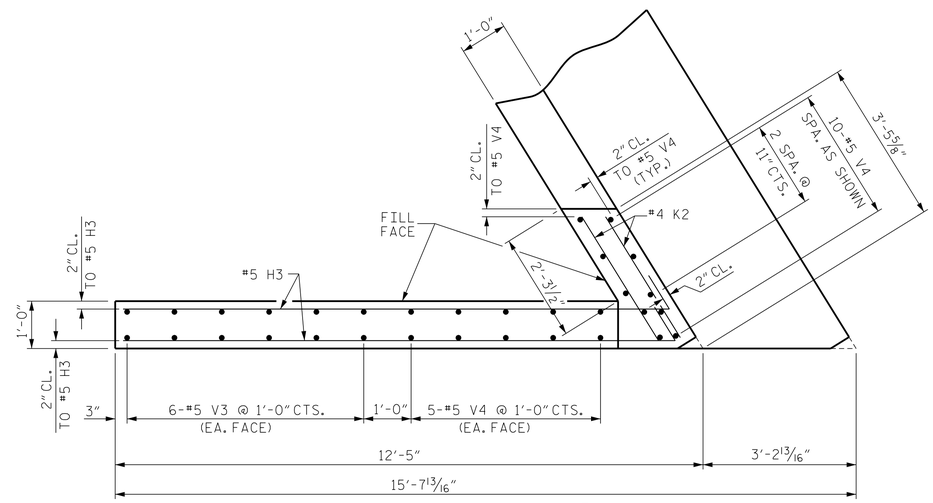

PLAN OF WING - (W2)

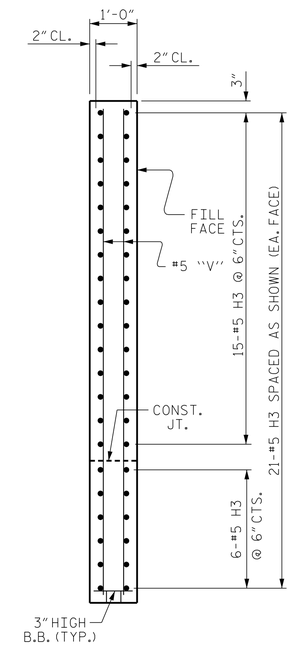

SECTION Y-Y

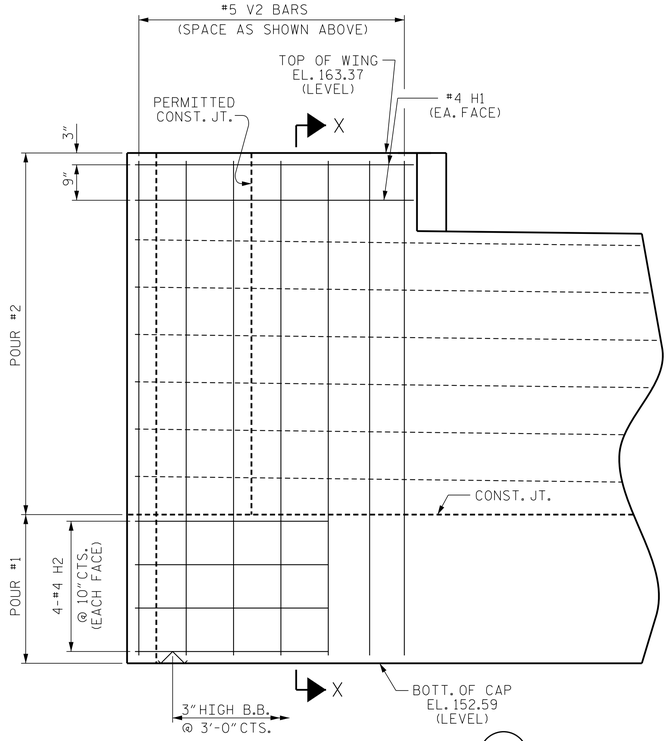

ELEVATION OF WING - (W1)

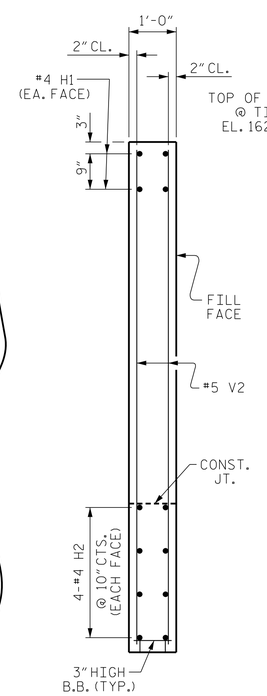

SECTION X-X

(K1 BARS NOT SHOWN)

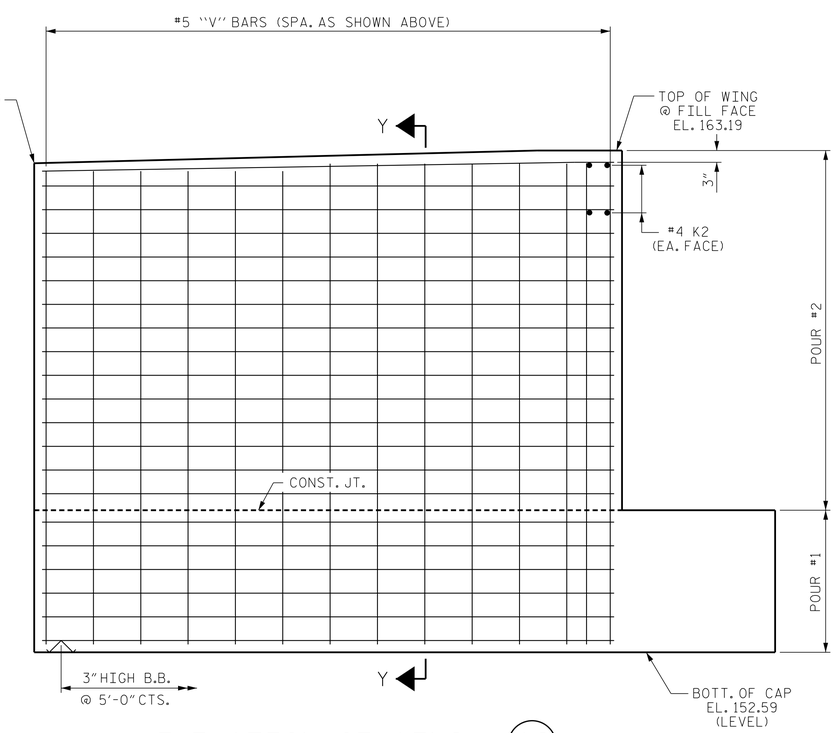

ELEVATION OF WING - (W2)

PROJECT NO. R-2582A

NORTHAMPTON COUNTY

STATION: 170+20.99 -L-

SHEET 2 OF 3

ENGINEER OF RECORD:

Gregory M. Gilland

NORTH CAROLINA PROFESSIONAL SEAL 37400 ENGINEER GREGORY M. GILLAND

9/12/2018

WETHERILL ENGINEERING

1223 Jones Franklin Rd.
Raleigh, N.C. 27606
Bus: 919 851 8077
Fax: 919 851 8107
LICENSE NO. F-0377

STATE OF NORTH CAROLINA
DEPARTMENT OF TRANSPORTATION
RALEIGH

SUBSTRUCTURE

END BENT No. 1

LEFT LANE

REVISIONS								SHEET NO.
NO.	BY:	DATE:	NO.	BY:	DATE:			S1-20
1			3					TOTAL SHEETS
2			4					27

DOCUMENT NOT CONSIDERED FINAL UNLESS ALL SIGNATURES COMPLETED

DRAWN BY : D. HODGE DATE : 5/18
CHECKED BY : G.M. GILLAND DATE : 5/18

P:\2018\18127.02 R-2582A\Structures\Site 1\DGN\STR1_LTLN\R2582A_SMU_ EBT_650126.dgn
9/5/2018 4:04:37 PM

DocuSign Envelope ID: 673F97C9-D397-4454-A1F9-939B91CF19A8

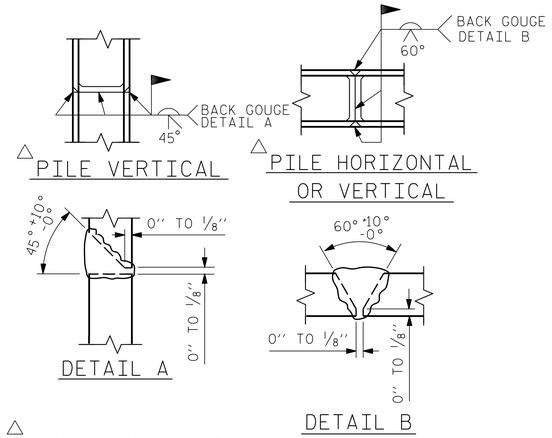

△ POSITION OF PILE DURING WELDING.

PILE SPLICE DETAILS

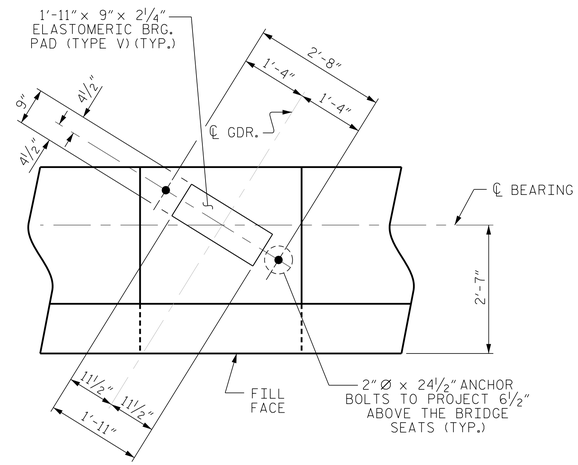

DETAIL "A"
(TYP. EA. GIRDER)

BAR TYPES

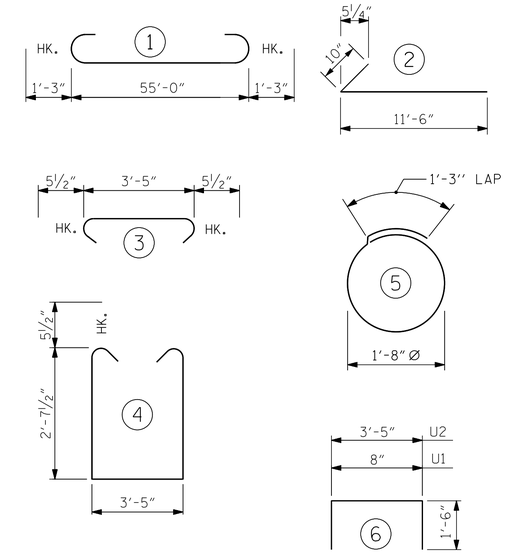

ALL BAR DIMENSIONS ARE OUT TO OUT.

BILL OF MATERIAL

END BENT No. 1

BAR	NO.	SIZE	TYPE	LENGTH	WEIGHT
B1	10	#9	1	57'-6"	1955
B2	4	#5	STR	55'-3"	231
B3	8	#4	STR	28'-11"	155
B4	14	#4	STR	3'-5"	32
B5	10	#4	STR	2'-11"	19
H1	4	#4	STR	5'-8"	15
H2	8	#4	STR	4'-2"	22
H3	42	#5	2	12'-4"	540
K1	36	#4	STR	21'-0"	505
K2	4	#4	STR	2'-10"	8
S1	72	#5	4	9'-7"	720
S2	72	#5	3	4'-4"	325
S3	36	#4	5	6'-6"	156
U1	49	#4	6	3'-8"	120
U2	6	#4	6	6'-5"	26
V1	98	#5	STR	8'-7"	877
V2	14	#5	STR	10'-5"	152
V3	12	#5	STR	10'-0"	125
V4	20	#5	STR	10'-2"	212

REINFORCING STEEL 6,195 LBS.

CLASS A CONCRETE BREAKDOWN

POUR #1	CAP AND LOWER PART OF WINGS	25.4 C.Y.
POUR #2	BACKWALL AND UPPER PART OF WINGS	16.4 C.Y.
TOTAL CLASS A CONCRETE		41.8 C.Y.

HP 12 X 53 STEEL PILES
NO: 9 855 L.F.

PILE DRIVING EQUIPMENT SETUP FOR HP 12 X 53 STEEL PILES 9 EA.

PILE REDRIVES 5 EA.

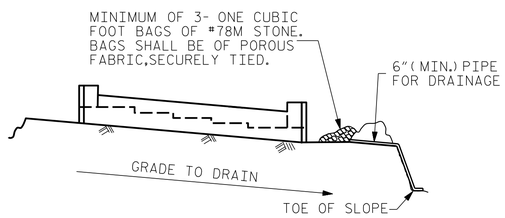

BAGGED STONE AND PIPE SHALL BE PLACED IMMEDIATELY AFTER COMPLETION OF END BENT EXCAVATION. PIPE MAY BE EITHER CONCRETE, CORRUGATED STEEL, CORRUGATED ALUMINUM ALLOY, OR CORRUGATED PLASTIC. PERFORATED PIPE WILL NOT BE ALLOWED.

BAGGED STONE SHALL REMAIN IN PLACE UNTIL THE ENGINEER DIRECTS THAT IT BE REMOVED. THE CONTRACTOR SHALL REMOVE AND DISPOSE OF SILT ACCUMULATIONS AT BAGGED STONE WHEN SO DIRECTED BY THE ENGINEER. BAGS SHALL BE REMOVED AND REPLACED WHENEVER THE ENGINEER DETERMINES THAT THEY HAVE DETERIORATED AND LOST THEIR EFFECTIVENESS.

NO SEPARATE PAYMENT WILL BE MADE FOR THIS WORK AND THE ENTIRE COST OF THIS WORK SHALL BE INCLUDED IN THE UNIT CONTRACT PRICE BID FOR THE SEVERAL PAY ITEMS.

TEMPORARY DRAINAGE AT END BENT

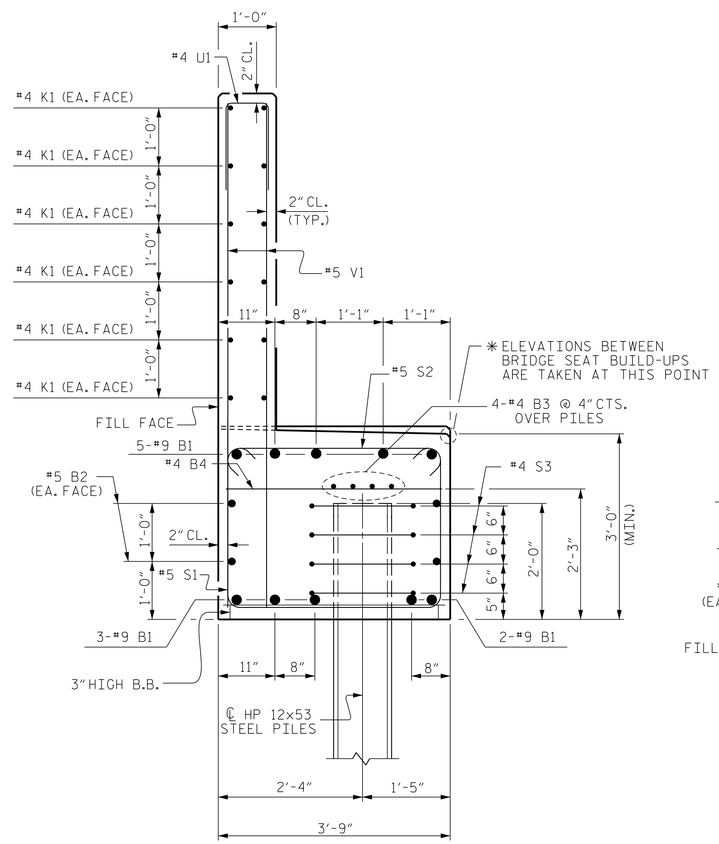

SECTION A-A

NOTES

STIRRUPS IN CAP MAY BE SHIFTED AS NECESSARY TO CLEAR ANCHOR BOLTS.

BACKWALL SHALL BE PLACED BEFORE APPLYING THE EPOXY PROTECTIVE COATING.

THE TOP SURFACE AREAS OF THE END BENT CAP SHALL BE CURED IN ACCORDANCE WITH THE STANDARD SPECIFICATIONS EXCEPT THE MEMBRANE CURING COMPOUND METHOD SHALL NOT BE USED.

THE TOP SURFACE OF THE END BENT CAP EXCEPT THE BRIDGE SEAT BUILDUPS SHALL BE SLOPED TRANSVERSELY FROM THE FILL FACE TO THE BACK FACE AT THE RATE OF 2%.

THE CONCRETE IN THE SHADED AREA OF THE WING SHALL BE POURED AFTER THE BARRIER RAILS ARE CAST IF SLIP FORMING IS USED.

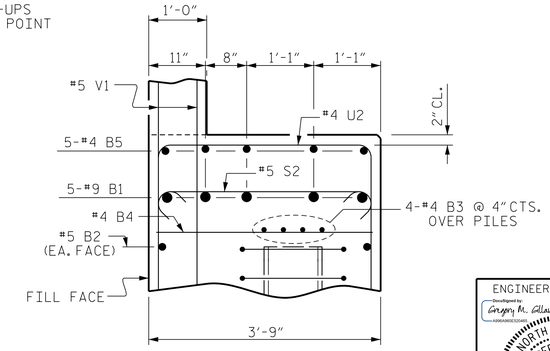

SECTION B-B

PROJECT NO. R-2582A
NORTHAMPTON COUNTY
STATION: 170+20.99 -L-

SHEET 3 OF 3

ENGINEER OF RECORD:
Gregory M. Gilland
NORTH CAROLINA PROFESSIONAL SEAL 37400 ENGINEER GREGORY M. GILLAND
9/25/2018

WETHERILL ENGINEERING
1223 Jones Franklin Rd.
Raleigh, N.C. 27606
Bus: 919 851 8077
Fax: 919 851 8107
LICENSE NO. F-0377

STATE OF NORTH CAROLINA
DEPARTMENT OF TRANSPORTATION
RALEIGH

SUBSTRUCTURE
END BENT No. 1
LEFT LANE

REVISIONS						SHEET NO.
NO.	BY:	DATE:	NO.	BY:	DATE:	S1-21
1			3			TOTAL SHEETS
2			4			27

DRAWN BY : D. HODGE DATE : 5/18
CHECKED BY : G.M. GILLAND DATE : 5/18

DOCUMENT NOT CONSIDERED FINAL UNLESS ALL SIGNATURES COMPLETED

P:\2018\18127.02 R-2582A\Structures\Site 1\DGN\STR1_LT_LWR2582A_SMU_ EBT_650126.dgn
9/24/2018 3:49:39 PM

DocuSign Envelope ID: 7554F43B-51A1-4C68-9A41-7FB1BD88385F

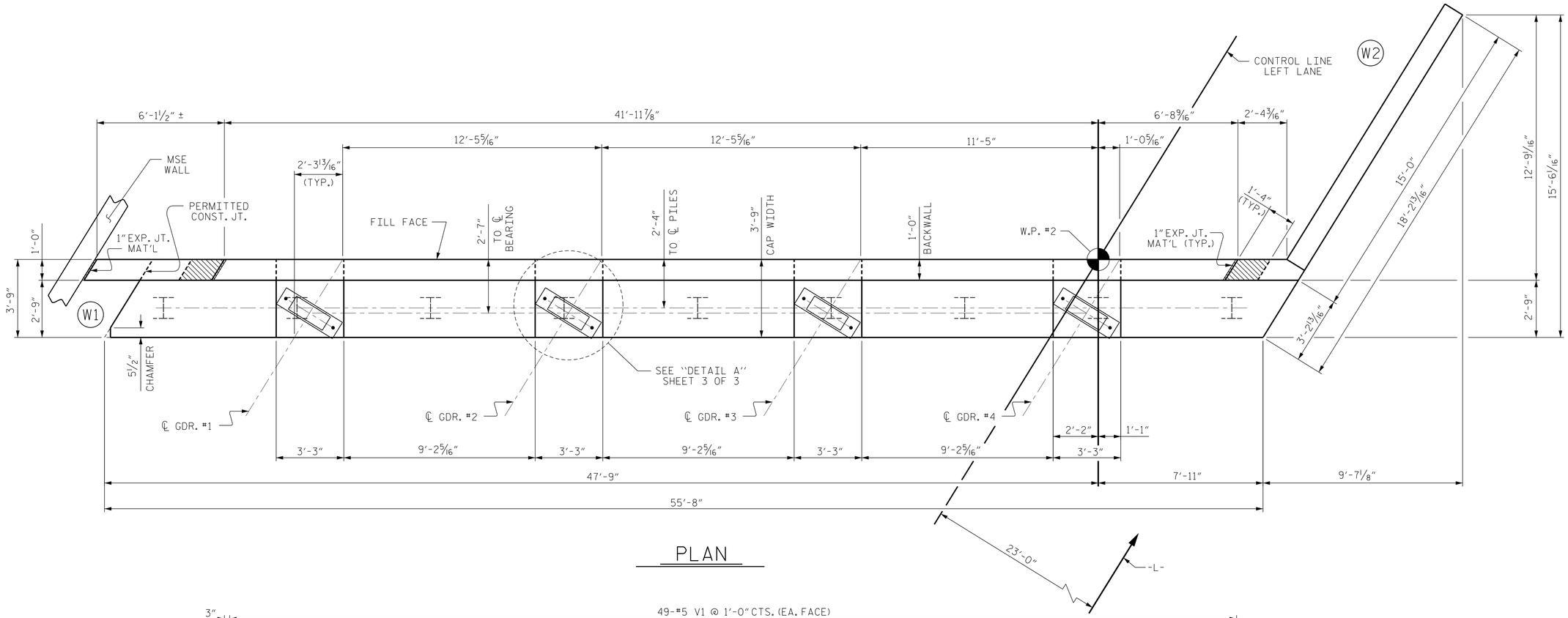

PLAN

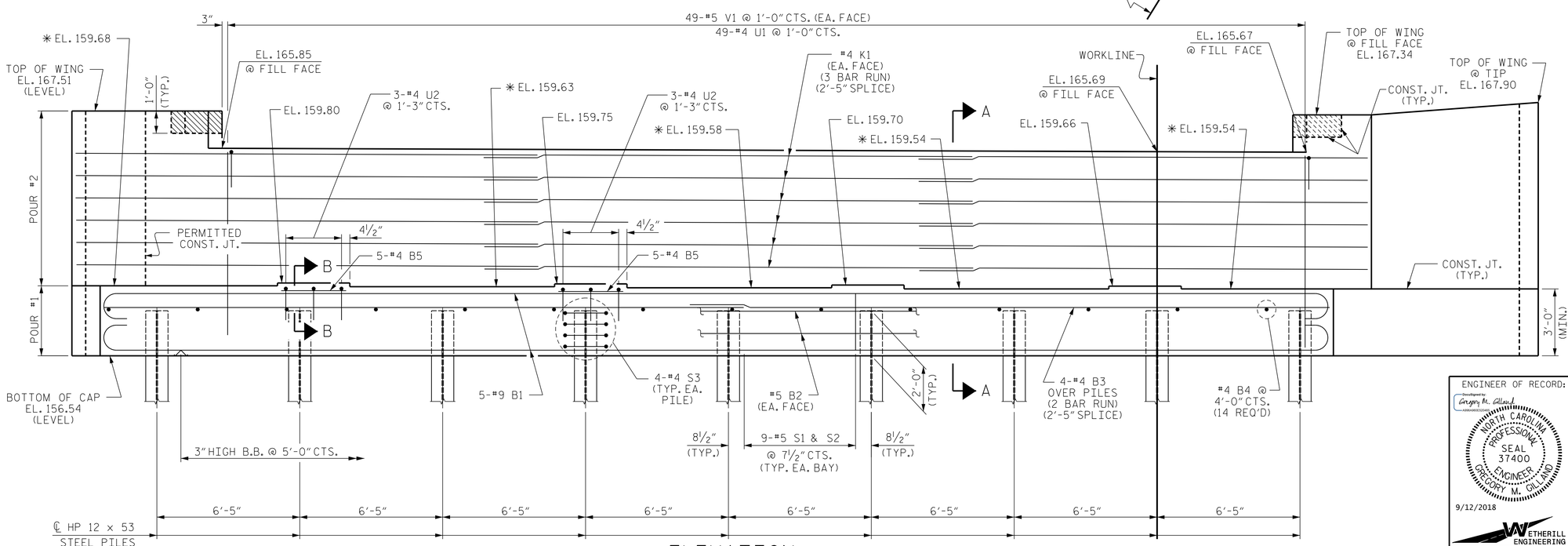

ELEVATION

✳ FOR LOCATION OF ELEVATIONS BETWEEN BRIDGE SEAT BUILD-UPS. SEE SECTION A-A, SHEET 3 OF 3.

PROJECT NO. R-2582A
NORTHAMPTON COUNTY
STATION: 170+20.99 -L-

SHEET 1 OF 3

ENGINEER OF RECORD:
Developed by: Gregory M. Gilland
Verified by: G.M. Gilland
NORTH CAROLINA PROFESSIONAL SEAL 37400 ENGINEER GREGORY M. GILLAND
9/12/2018

WETHERILL ENGINEERING
1223 Jones Franklin Rd.
Raleigh, N.C. 27606
Bus: 919 851 8077
Fax: 919 851 8107
LICENSE NO. F-0377

STATE OF NORTH CAROLINA
DEPARTMENT OF TRANSPORTATION
RALEIGH

SUBSTRUCTURE
END BENT No. 2
LEFT LANE

REVISIONS						SHEET NO.
NO.	BY:	DATE:	NO.	BY:	DATE:	S1-22
1			3			TOTAL SHEETS
2			4			27

DRAWN BY : D. HODGE DATE : 5/18
CHECKED BY : G.M. GILLAND DATE : 5/18

DOCUMENT NOT CONSIDERED FINAL UNLESS ALL SIGNATURES COMPLETED

P:\2018\18127.02 R-2582A\Structures\Site 1\DGN\STR1_LT_LWR2582A_SMU_ EBT_650126.dgn
9/5/2018 4:06:17 PM

DocuSign Envelope ID: 7554F43B-51A1-4C68-9A41-7FB1BD88385F

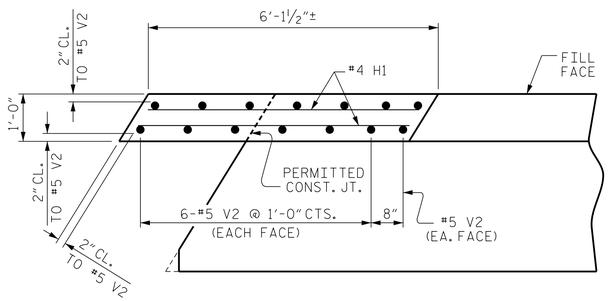

PLAN OF WING - (W1)

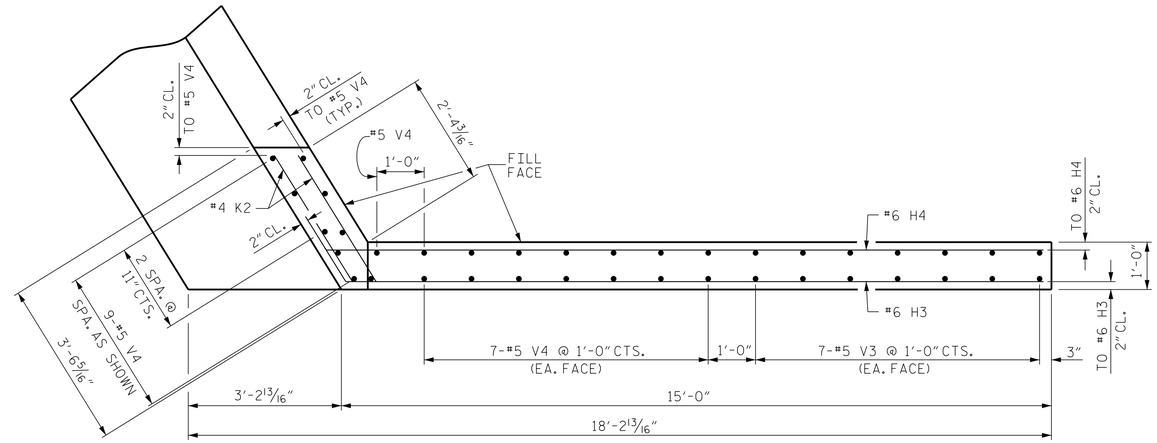

PLAN OF WING - (W2)

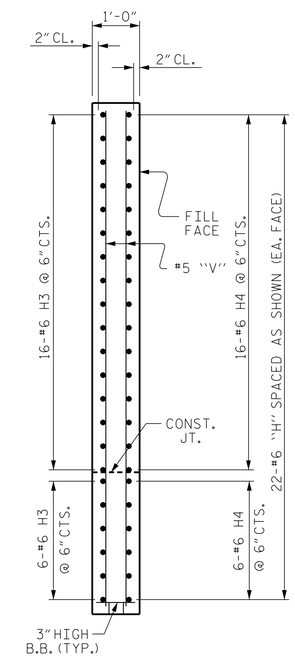

SECTION Y-Y

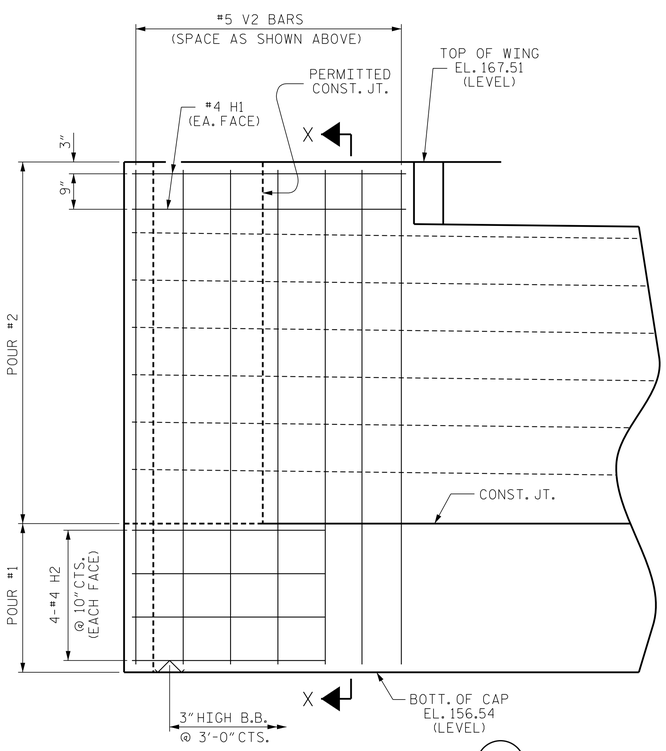

ELEVATION OF WING - (W1)

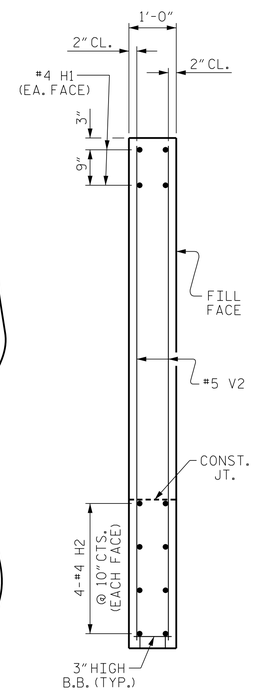

SECTION X-X

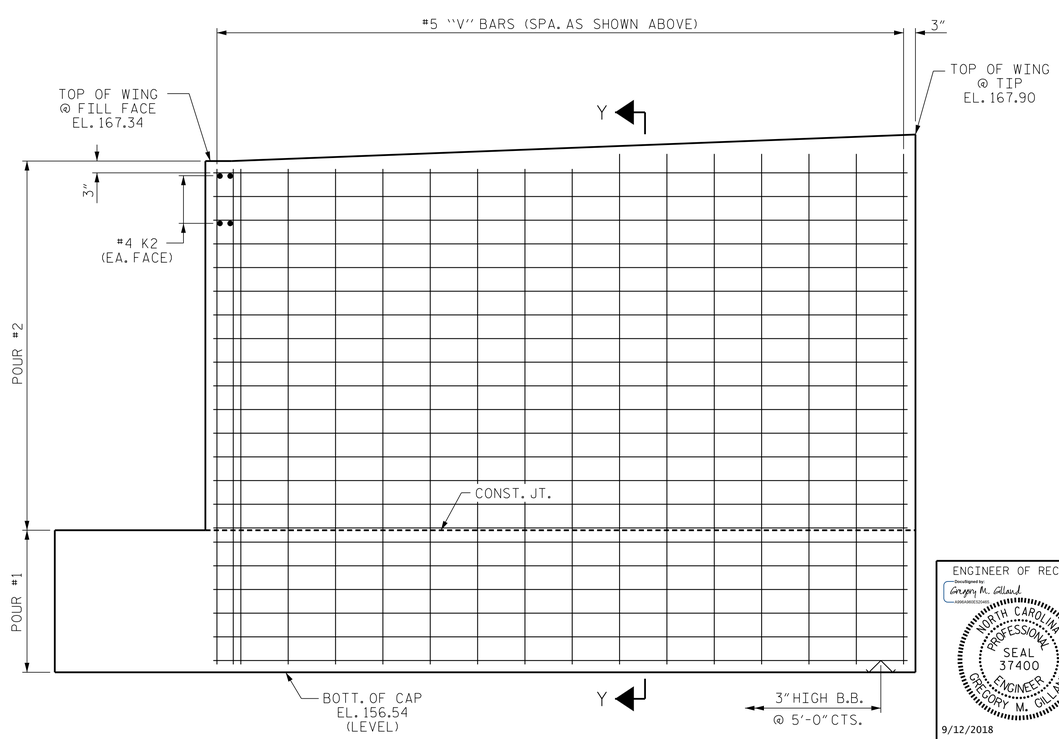

ELEVATION OF WING - (W2)

PROJECT NO. R-2582A
NORTHAMPTON COUNTY
STATION: 170+20.99 -L-

SHEET 2 OF 3

ENGINEER OF RECORD:
Gregory M. Gilland
NORTH CAROLINA PROFESSIONAL SEAL 37400 ENGINEER GREGORY M. GILLAND
9/12/2018

WETHERILL ENGINEERING
1223 Jones Franklin Rd.
Raleigh, N.C. 27606
Bus: 919 851 8077
Fax: 919 851 8107
LICENSE NO. F-0377

STATE OF NORTH CAROLINA
DEPARTMENT OF TRANSPORTATION
RALEIGH

SUBSTRUCTURE
END BENT No. 2
LEFT LANE

REVISIONS						SHEET NO.
NO.	BY:	DATE:	NO.	BY:	DATE:	S1-23
1			3			TOTAL SHEETS
2			4			27

DRAWN BY : D. HODGE DATE : 5/18
CHECKED BY : G.M. GILLAND DATE : 5/18

DOCUMENT NOT CONSIDERED FINAL UNLESS ALL SIGNATURES COMPLETED

P:\2018\18127.02 R-2582A\Structures\Site 1\DGN\STR1_LT\WR2582A_SMU_ EBT_650126.dgn
9/5/2018 4:07:02 PM

DocuSign Envelope ID: 673F97C9-D397-4454-A1F9-939B91CF19A8

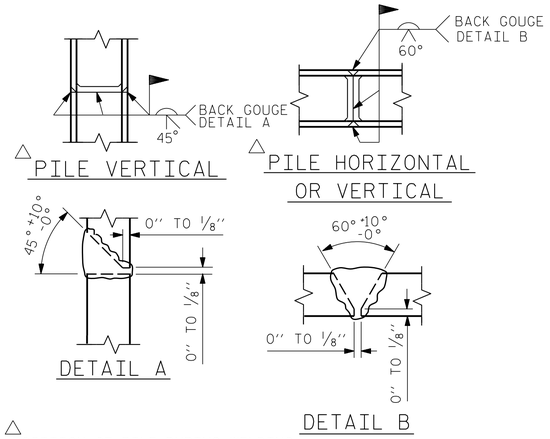

POSITION OF PILE DURING WELDING.

PILE SPLICE DETAILS

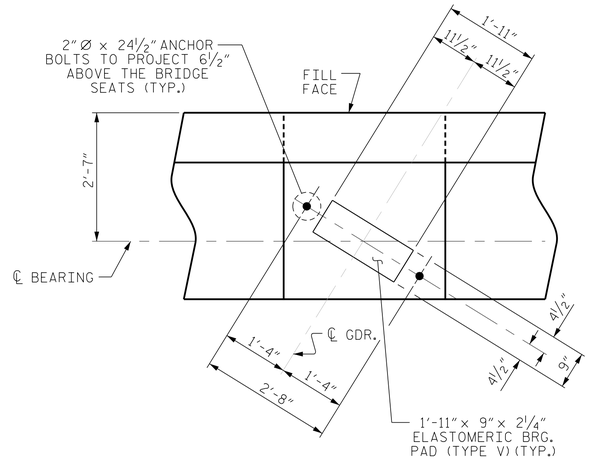

DETAIL "A"

(TYP. EA. GIRDER)

BAR TYPES

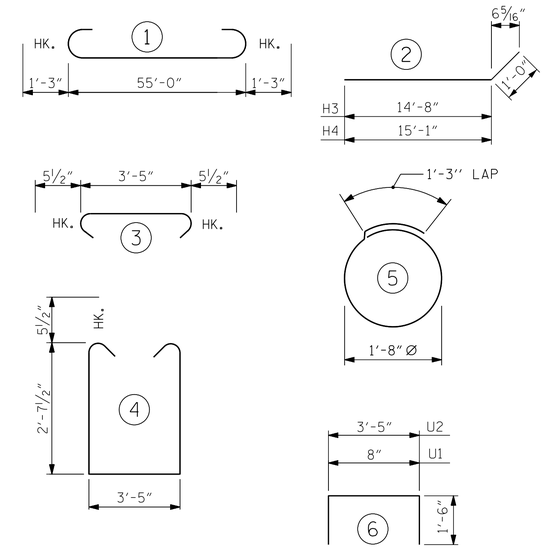

ALL BAR DIMENSIONS ARE OUT TO OUT.

BILL OF MATERIAL

END BENT No. 2

BAR	NO.	SIZE	TYPE	LENGTH	WEIGHT
B1	10	#9	1	57'-6"	1955
B2	4	#5	STR	55'-3"	231
B3	8	#4	STR	28'-11"	155
B4	14	#4	STR	3'-5"	32
B5	10	#4	STR	2'-11"	19
H1	4	#4	STR	5'-8"	15
H2	8	#4	STR	4'-2"	22
H3	22	#6	2	15'-8"	518
H4	22	#6	2	16'-1"	531
K1	36	#4	STR	21'-0"	505
K2	4	#4	STR	3'-1"	8
S1	72	#5	4	9'-7"	720
S2	72	#5	3	4'-4"	325
S3	36	#4	5	6'-6"	156
U1	49	#4	6	3'-8"	120
U2	6	#4	6	6'-5"	26
V1	98	#5	STR	8'-9"	894
V2	14	#5	STR	10'-7"	155
V3	14	#5	STR	10'-9"	157
V4	24	#5	STR	10'-5"	261
REINFORCING STEEL					6,805 LBS.

CLASS A CONCRETE BREAKDOWN

POUR #1	CAP AND LOWER PART OF WINGS	25.8 C.Y.
POUR #2	BACKWALL AND UPPER PART OF WINGS	18.1 C.Y.
TOTAL CLASS A CONCRETE		43.9 C.Y.

HP 12 X 53 STEEL PILES
NO: 9 — 880 L.F.

PILE DRIVING EQUIPMENT SETUP FOR HP 12 X 53 STEEL PILES — 9 EA.

PILE REDRIVES — 5 EA.

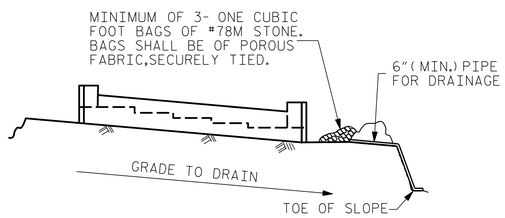

BAGGED STONE AND PIPE SHALL BE PLACED IMMEDIATELY AFTER COMPLETION OF END BENT EXCAVATION. PIPE MAY BE EITHER CONCRETE, CORRUGATED STEEL, CORRUGATED ALUMINUM ALLOY, OR CORRUGATED PLASTIC. PERFORATED PIPE WILL NOT BE ALLOWED.

BAGGED STONE SHALL REMAIN IN PLACE UNTIL THE ENGINEER DIRECTS THAT IT BE REMOVED. THE CONTRACTOR SHALL REMOVE AND DISPOSE OF SILT ACCUMULATIONS AT BAGGED STONE WHEN SO DIRECTED BY THE ENGINEER. BAGS SHALL BE REMOVED AND REPLACED WHENEVER THE ENGINEER DETERMINES THAT THEY HAVE DETERIORATED AND LOST THEIR EFFECTIVENESS.

NO SEPARATE PAYMENT WILL BE MADE FOR THIS WORK AND THE ENTIRE COST OF THIS WORK SHALL BE INCLUDED IN THE UNIT CONTRACT PRICE BID FOR THE SEVERAL PAY ITEMS.

TEMPORARY DRAINAGE AT END BENT

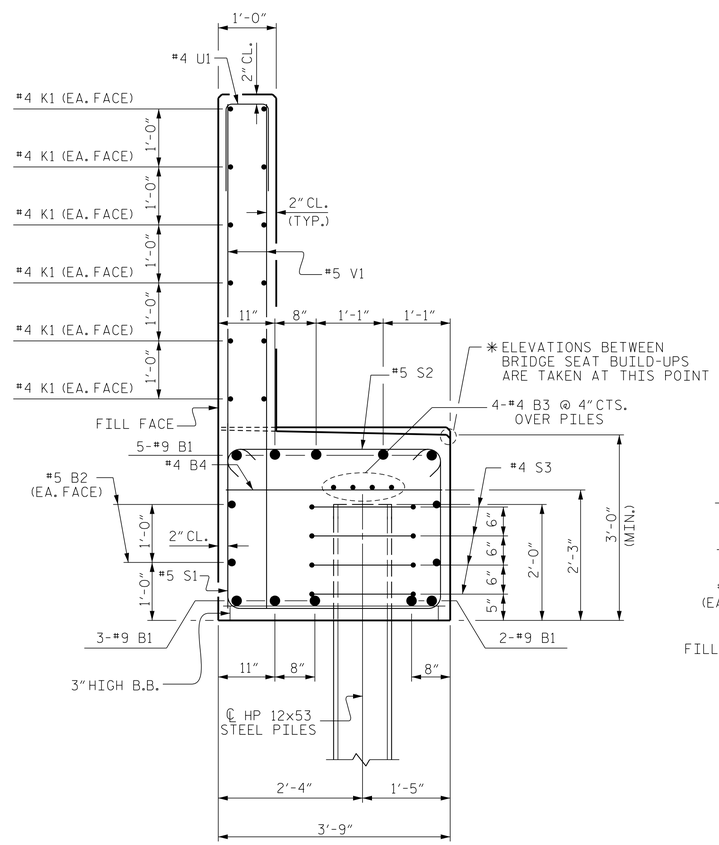

SECTION A-A

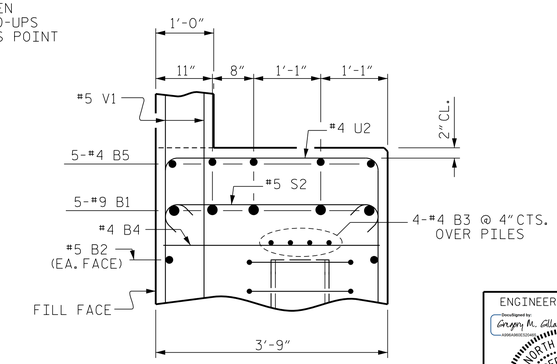

SECTION B-B

NOTES

STIRRUPS IN CAP MAY BE SHIFTED AS NECESSARY TO CLEAR ANCHOR BOLTS.

BACKWALL SHALL BE PLACED BEFORE APPLYING THE EPOXY PROTECTIVE COATING.

THE TOP SURFACE AREAS OF THE END BENT CAP SHALL BE CURED IN ACCORDANCE WITH THE STANDARD SPECIFICATIONS EXCEPT THE MEMBRANE CURING COMPOUND METHOD SHALL NOT BE USED.

THE TOP SURFACE OF THE END BENT CAP EXCEPT THE BRIDGE SEAT BUILDUPS SHALL BE SLOPED TRANSVERSELY FROM THE FILL FACE TO THE BACK FACE AT THE RATE OF 2%.

THE CONCRETE IN THE SHADED AREA OF THE WING SHALL BE POURED AFTER BARRIER RAILS ARE CAST IF SLIP FORMING IS USED.

PROJECT NO. R-2582A
NORTHAMPTON COUNTY
STATION: 170+20.99 -L-

SHEET 3 OF 3

ENGINEER OF RECORD:
Gregory M. Gilland
NORTH CAROLINA PROFESSIONAL SEAL 37400 ENGINEER GREGORY M. GILLAND
9/25/2018

WETHERILL ENGINEERING
1223 Jones Franklin Rd.
Raleigh, N.C. 27606
Bus: 919 851 8077
Fax: 919 851 8107
LICENSE NO. F-0377

STATE OF NORTH CAROLINA
DEPARTMENT OF TRANSPORTATION
RALEIGH

SUBSTRUCTURE
END BENT No. 2
LEFT LANE

REVISIONS						SHEET NO.
NO.	BY:	DATE:	NO.	BY:	DATE:	S1-24
1			3			TOTAL SHEETS
2			4			27

DRAWN BY : D. HODGE DATE : 5/18
CHECKED BY : G.M. GILLAND DATE : 5/18

DOCUMENT NOT CONSIDERED FINAL UNLESS ALL SIGNATURES COMPLETED

P:\2018\18127.02 R-2582A\Structures\Site 1\DGN\STR1_LT_LWR2582A_SMU_ EBT_650126.dgn
9/24/2018 3:50:44 PM

DocuSign Envelope ID: 7554F43B-51A1-4C68-9A41-7FB1BD88385F

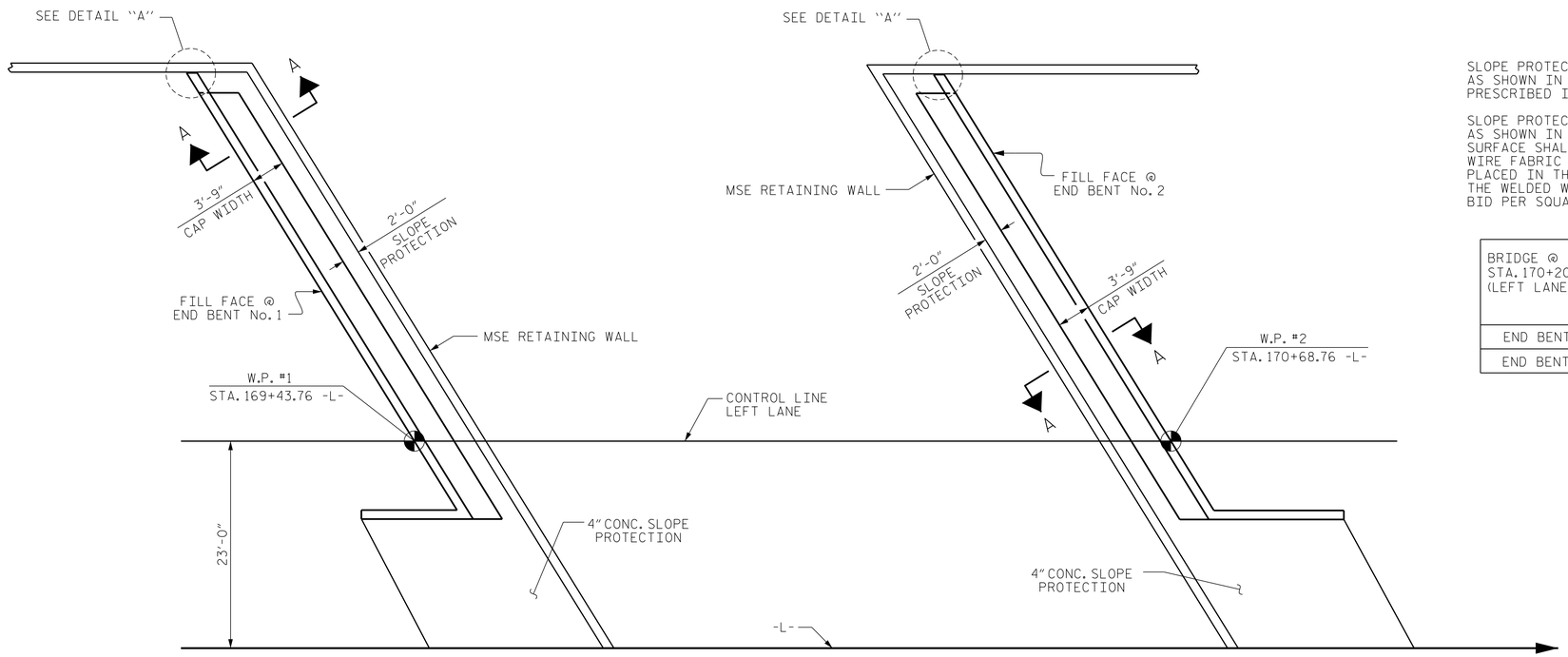

END BENT No. 1

END BENT No. 2

PLAN

NOTES

SLOPE PROTECTION SHALL BE PLACED UNDER THE ENDS OF THE BRIDGE AS SHOWN IN THE DETAILS. MEASUREMENT AND PAYMENT SHALL BE AS PRESCRIBED IN SECTION 462 OF THE STANDARD SPECIFICATIONS.

SLOPE PROTECTION SHALL CONSIST OF 4" POURED-IN-PLACE CONCRETE PAVING AS SHOWN IN THE DETAILS. CONCRETE SHALL BE CLASS "B". THE CONCRETE SURFACE SHALL BE FINISHED TO THE SATISFACTION OF THE ENGINEER. WELDED WIRE FABRIC REINFORCING SHALL BE 6 X 6 - W1.4 X W1.4. 20" WIDE AND PLACED IN THE MIDDLE OF THE 4" CONCRETE SLOPE PROTECTION. THE COST OF THE WELDED WIRE FABRIC SHALL BE INCLUDED IN THE CONTRACT UNIT PRICE BID PER SQUARE YARD FOR SLOPE PROTECTION.

BRIDGE @ STA. 170+20.99 -L- (LEFT LANE)	4" SLOPE PROTECTION	WELDED WIRE FABRIC 20 INCHES WIDE
	SQUARE YARDS	APPROX. L.F.
END BENT 1	49	86
END BENT 2	52	91

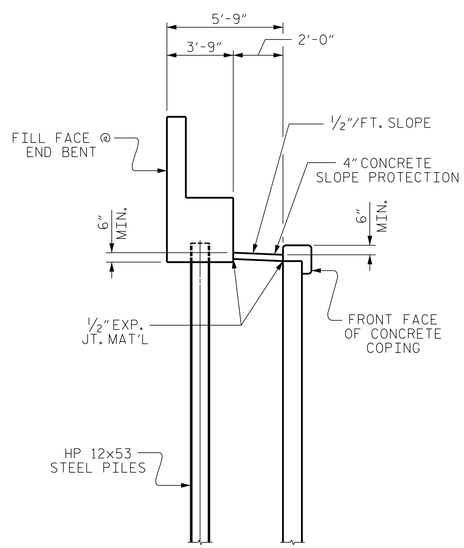

SECTION A-A

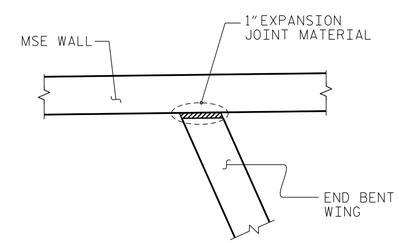

DETAIL "A"

(TYP. EACH WING TO MSE WALL CONNECTION)

PROJECT NO. R-2582A

NORTHAMPTON COUNTY

STATION: 170+20.99 -L-

ENGINEER OF RECORD:

Gregory M. Gilland

NORTH CAROLINA PROFESSIONAL SEAL 37400 ENGINEER GREGORY M. GILLAND

9/12/2018

WETHERILL ENGINEERING

1223 Jones Franklin Rd.
Raleigh, N.C. 27606
Bus: 919 851 8077
Fax: 919 851 8107
LICENSE NO. F-0377

STATE OF NORTH CAROLINA
DEPARTMENT OF TRANSPORTATION
RALEIGH

SLOPE PROTECTION DETAILS

LEFT LANE

REVISIONS						SHEET NO.
NO.	BY:	DATE:	NO.	BY:	DATE:	S1-25
1			3			TOTAL SHEETS
2			4			27

DOCUMENT NOT CONSIDERED FINAL UNLESS ALL SIGNATURES COMPLETED

DRAWN BY : D. HODGE DATE : 4/18
CHECKED BY : G.M. GILLAND DATE : 5/18

P:\2018\18127.02 R-2582A\Structures\Site 1\DGN\STR1_LTLNR2582A_SMU_ SP_650126.dgn
9/5/2018 4:25:27 PM

DocuSign Envelope ID: 673F97C9-D397-4454-A1F9-939B91CF19A8

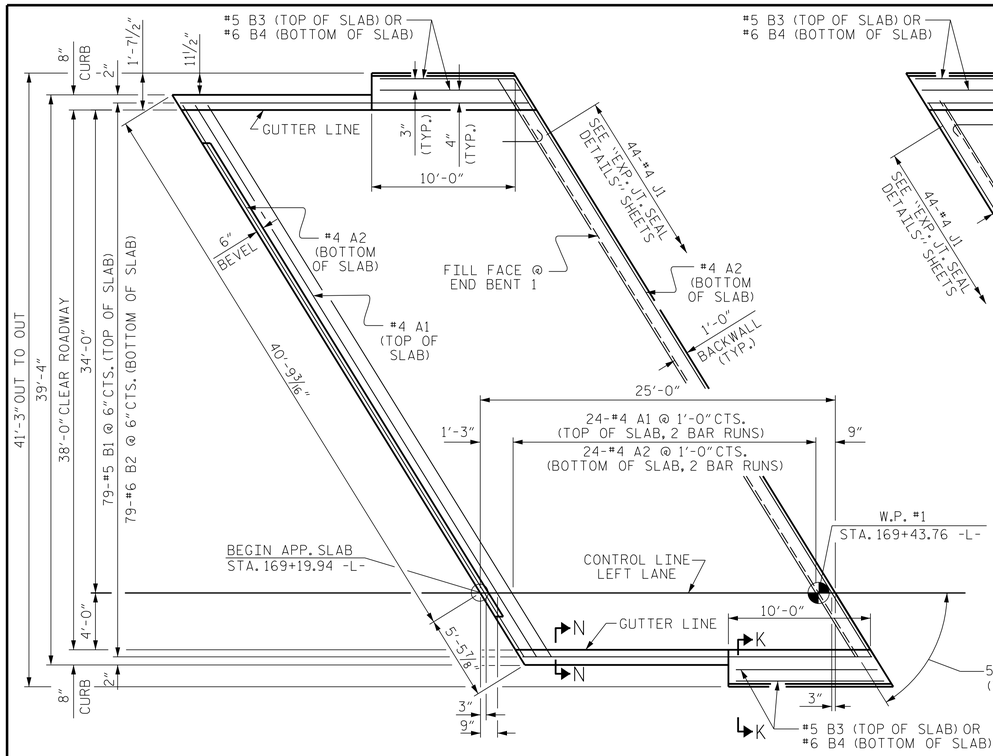

PLAN @ END BENT 1

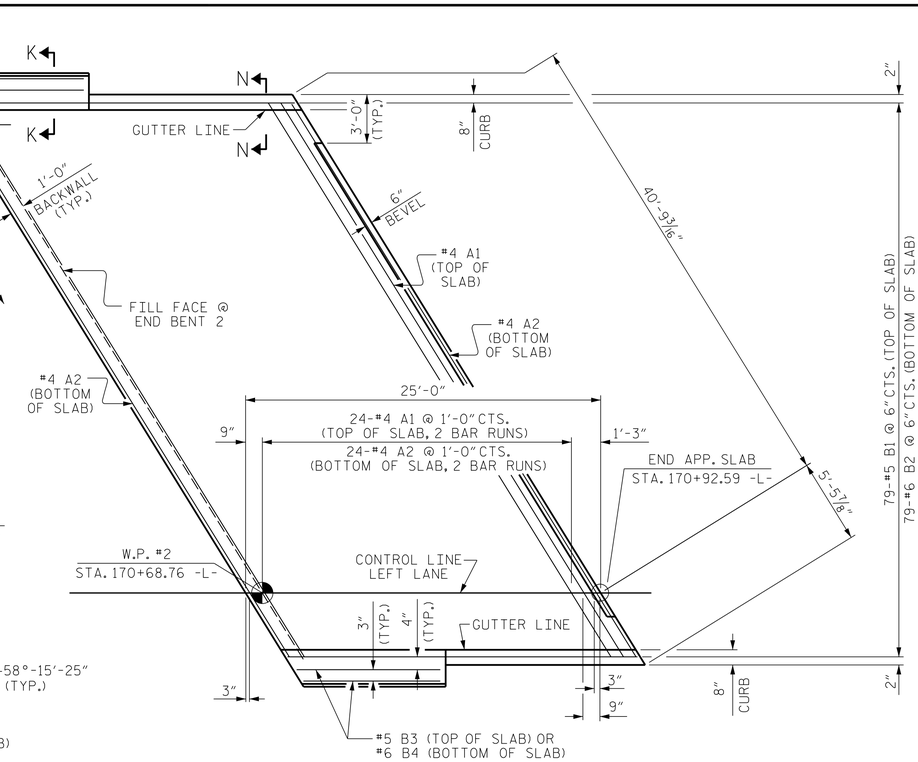

PLAN @ END BENT 2

DIMENSIONS SHOWN ARE TYPICAL FOR BOTH APPROACH SLABS

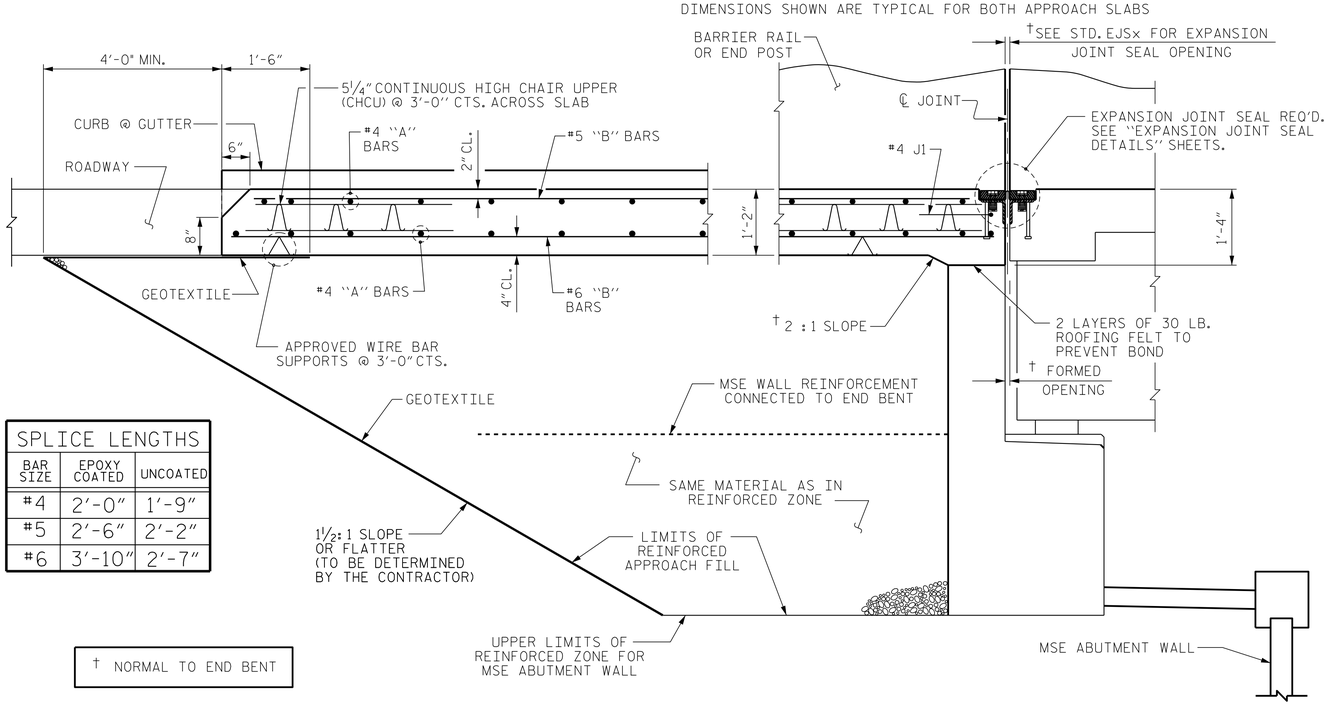

SPLICE LENGTHS		
BAR SIZE	EPOXY COATED	UNCOATED
#4	2'-0"	1'-9"
#5	2'-6"	2'-2"
#6	3'-10"	2'-7"

† NORMAL TO END BENT

SECTION THRU SLAB

(TYPE III - REINFORCED APPROACH FILL)

NOTES

FOR BRIDGE APPROACH FILL INCLUDING GEOTEXTILE, MSE WALL REINFORCEMENT AND BACKFILL MATERIAL SEE ROADWAY PLANS.

GEOTEXTILE SHALL BE TYPE 1 IN ACCORDANCE WITH THE STANDARD SPECIFICATIONS SECTION 1056.

BACKFILL MATERIAL SHALL BE THE SAME MATERIAL USED IN THE MSE REINFORCED ZONE.

APPROACH SLAB SHALL NOT BE CONSTRUCTED PRIOR TO COMPLETION OF THE BRIDGE DECK.

AREA BETWEEN THE WINGWALL AND APPROACH SLAB SHALL BE GRADED TO DRAIN THE WATER AWAY FROM THE FILL FACE OF THE BRIDGE AND SHALL BE PAVED. SEE ROADWAY PLANS.

FOR EXPANSION JOINT SEALS, SEE SPECIAL PROVISIONS.

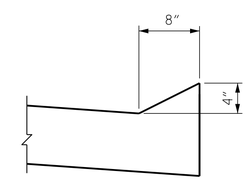

SECTION N-N

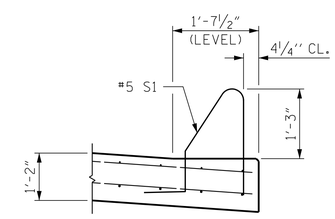

SECTION K-K

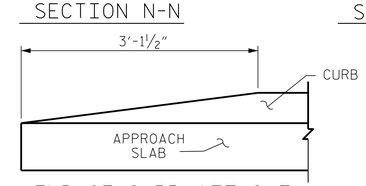

END OF CURB WITHOUT SHOULDER BERM GUTTER

CURB DETAILS

BILL OF MATERIAL

APPROACH SLAB AT BENT 1

BAR	NO.	SIZE	TYPE	LENGTH	WEIGHT
* A1	50	#4	STR	25'-1"	838
A2	52	#4	STR	25'-0"	868
* B1	79	#5	STR	23'-6"	1936
B2	79	#6	STR	24'-7"	2917
* B3	4	#5	STR	9'-10"	41
B4	4	#6	STR	9'-10"	59
* J1	44	#4	1	1'-5"	42
REINFORCING STEEL **				LBS.	3,844
* EPOXY COATED REINFORCING STEEL **				LBS.	2,857
CLASS AA CONCRETE **				C.Y.	43.6

APPROACH SLAB AT BENT 2

BAR	NO.	SIZE	TYPE	LENGTH	WEIGHT
* A1	50	#4	STR	25'-1"	838
A2	52	#4	STR	25'-0"	868
* B1	79	#5	STR	23'-6"	1936
B2	79	#6	STR	24'-7"	2917
* B3	4	#5	STR	9'-10"	41
B4	4	#6	STR	9'-10"	59
* J1	44	#4	1	1'-5"	42
REINFORCING STEEL **				LBS.	3,844
* EPOXY COATED REINFORCING STEEL **				LBS.	2,857
CLASS AA CONCRETE **				C.Y.	43.6

BAR TYPE

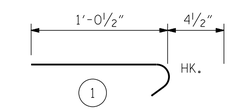

ALL BAR DIMENSIONS ARE OUT TO OUT

** QUANTITIES FOR BARRIER RAIL ARE NOT INCLUDED. SEE SHEET 2 OF 2.

THE QUANTITY OF #4 J1 BARS ON THE BILL OF MATERIAL IS BASED ON 1'-0" CENTERS. J1 BARS SHALL BE PLACED AT EACH VERTICAL STUD ANCHOR BOLT. IN THE EVENT THAT THE NUMBER OF VERTICAL STUD ANCHORS EXCEEDS THE NUMBER OF J1 BARS SPECIFIED, ADDITIONAL J1 BARS WILL NOT BE REQUIRED.

PROJECT NO. R-2582A
NORTHAMPTON COUNTY
STATION: 170+20.99 -L-

SHEET 1 OF 2

ENGINEER OF RECORD:
Gregory M. Gilland
NORTH CAROLINA PROFESSIONAL SEAL 37400 ENGINEER GREGORY M. GILLAND
9/25/2018

WETHERILL ENGINEERING
1223 Jones Franklin Rd.
Raleigh, N.C. 27606
Bus: 919 851 8077
Fax: 919 851 8107
LICENSE NO. F-0377

STATE OF NORTH CAROLINA
DEPARTMENT OF TRANSPORTATION
RALEIGH

STANDARD

BRIDGE APPROACH SLAB FOR FLEXIBLE PAVEMENT (LEFT LANE)

REVISIONS							
NO.	BY:	DATE:	NO.	BY:	DATE:	SHEET NO.	
1			3			S1-26	
2			4			TOTAL SHEETS	
						27	

DOCUMENT NOT CONSIDERED FINAL UNLESS ALL SIGNATURES COMPLETED

ASSEMBLED BY : D. HODGE		DATE : 8/18	
CHECKED BY : G.M. GILLAND		DATE : 8/18	
DRAWN BY : EEM 3/95	REV. 12/21/11	MAA/GM	
CHECKED BY : VAP 3/95	REV. 6/13	MAA/GM	
	REV. 12/17	MAA/THC	

P:\2018\18127.02 R-2582A\Structures\Site 1\DGN\STR1_LT1N\R2582A_SMU_ AS_650126.dgn
9/24/2018 3:51:45 PM

STD. NO. BAS2 (SHT 3a)

DocuSign Envelope ID: 7554F43B-51A1-4C68-9A41-7FB1BD88385F

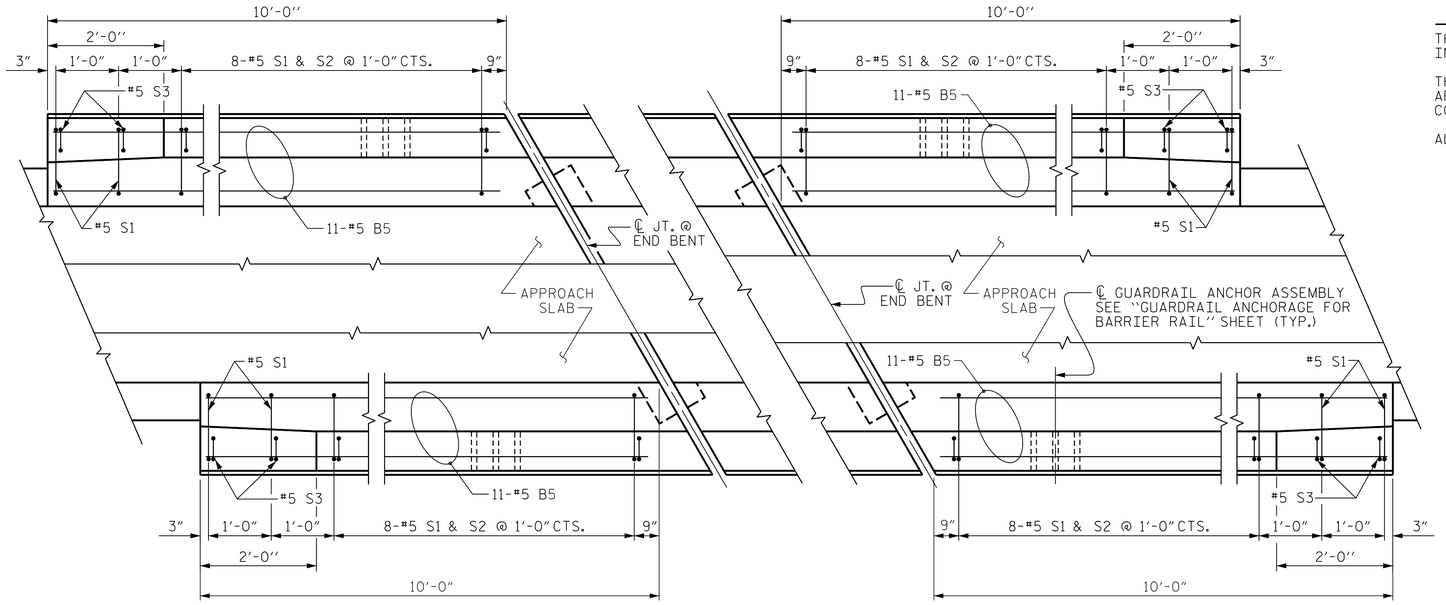

END BENT 1

END BENT 2

PLAN OF BARRIER RAIL

NOTES

THE COST OF THE BARRIER RAIL ON THE APPROACH SLAB SHALL BE INCLUDED IN THE LINEAR FOOT CONTRACT PRICE BID FOR "CONCRETE BARRIER RAIL".

THE BARRIER RAIL ON EACH APPROACH SLAB SHALL NOT BE CAST UNTIL ALL APPROACH SLAB CONCRETE HAS BEEN CAST AND HAS REACHED A MINIMUM COMPRESSIVE STRENGTH OF 3,000 PSI.

ALL REINFORCING STEEL IN BARRIER RAILS SHALL BE EPOXY COATED.

BAR TYPES

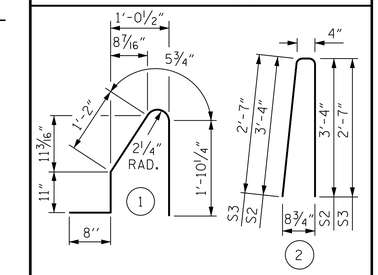

ALL BAR DIMENSIONS ARE OUT TO OUT

BILL OF MATERIAL

BARRIER RAIL ONLY

BAR	NO.	SIZE	TYPE	LENGTH	WEIGHT
✳B5	44	#5	STR	9'-10"	451
✳S1	40	#5	1	5'-1"	212
✳S2	32	#5	2	7'-0"	234
✳S3	8	#5	2	5'-6"	46
✳EPOXY COATED REINFORCING STEEL				LBS.	943
CLASS AA CONCRETE				C.Y.	5.7
CONCRETE BARRIER RAIL				41.86	LIN. FT.

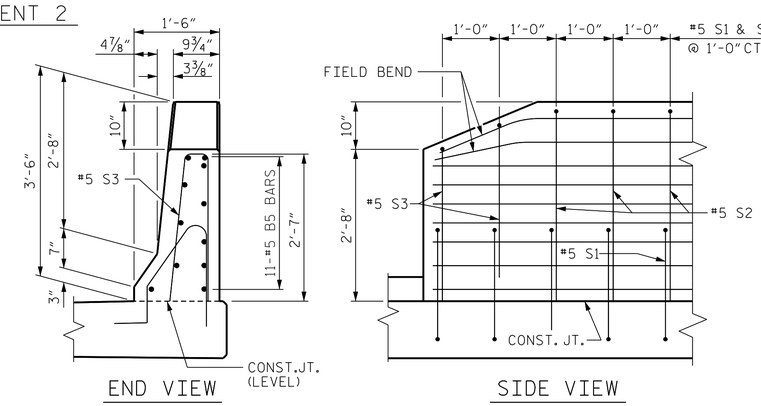

END VIEW

SIDE VIEW

END OF RAIL DETAILS

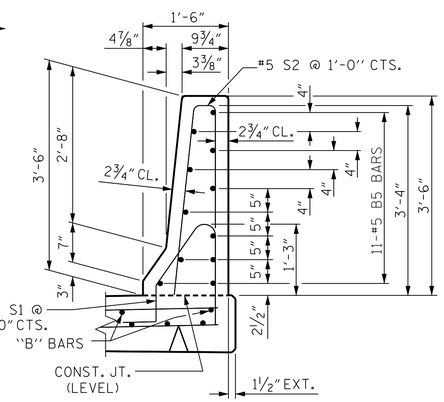

SECTION THRU RAIL

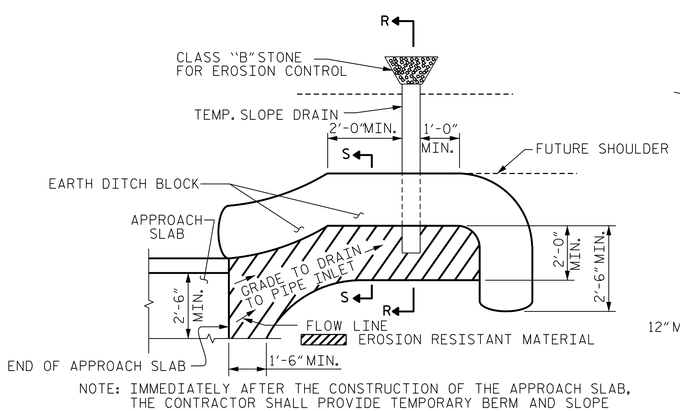

NOTE: IMMEDIATELY AFTER THE CONSTRUCTION OF THE APPROACH SLAB, THE CONTRACTOR SHALL PROVIDE TEMPORARY BERM AND SLOPE DRAIN. CONTRACTOR SHALL GRADE TO PIPE INLET AND PROVIDE EROSION RESISTANT MATERIAL AS SHOWN. THE EROSION RESISTANT MATERIAL SHALL BE EITHER 1) ASPHALT PLANT MIX, TYPE 1 OR TYPE 2, MIN. 2" DEPTH, 2) EROSION CONTROL MAT, OR 3) CONCRETE, AS DIRECTED BY THE ENGINEER. THE SLOPE DRAIN SHALL CONSIST OF A NON-PERFORATED TEMPORARY DRAINAGE PIPE, 12 INCHES IN DIAMETER.

PLAN VIEW

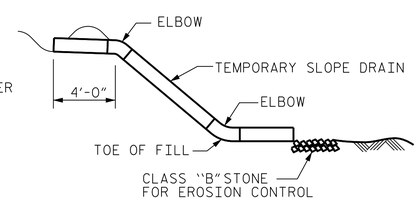

SECTION R-R

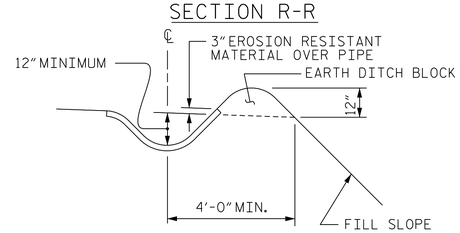

SECTION S-S

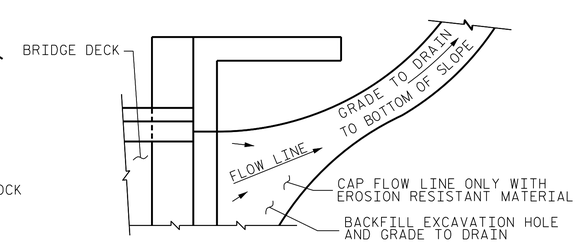

NOTE: IF THE APPROACH SLAB IS NOT CONSTRUCTED IMMEDIATELY AFTER THE BACKFILLING OF THE END BENT EXCAVATION, GRADE TO DRAIN TO THE BOTTOM OF THE SLOPE AND PROVIDE EROSION RESISTANT MATERIAL, SUCH AS FIBERGLASS ROVING OR AS DIRECTED BY THE ENGINEER TO PREVENT SOIL EROSION AND TO PROTECT THE AREA ADJACENT TO THE STRUCTURE. THE CONTRACTOR WILL BE REQUIRED TO REMOVE THESE MATERIALS PRIOR TO CONSTRUCTION OF THE APPROACH SLAB.

TEMPORARY DRAINAGE DETAIL

TEMPORARY BERM AND SLOPE DRAIN DETAILS

(TO BE USED WHEN SHOULDER BERM GUTTER IS REQUIRED)

PROJECT NO. R-2582A

NORTHAMPTON COUNTY

STATION: 170+20.99 -L-

SHEET 2 OF 2

ENGINEER OF RECORD:

Gregory M. Gilland

NORTH CAROLINA PROFESSIONAL SEAL 37400 ENGINEER GREGORY M. GILLAND

9/12/2018

WETHERILL ENGINEERING

1223 Jones Franklin Rd.
Raleigh, N.C. 27606
Bus: 919 851 8077
Fax: 919 851 8107
LICENSE NO. F-0377

STATE OF NORTH CAROLINA
DEPARTMENT OF TRANSPORTATION
RALEIGH

STANDARD

BRIDGE APPROACH SLAB DETAILS

(LEFT LANE)

REVISIONS						SHEET NO.
NO.	BY:	DATE:	NO.	BY:	DATE:	S1-27
1			3			TOTAL SHEETS
2			4			27

ASSEMBLED BY : D. HODGE		DATE :	8/18
CHECKED BY : G.M. GILLAND		DATE :	8/18
DRAWN BY : FCJ	11/88	REV. 6/13	MAA/GM
CHECKED BY : ARB	11/88	REV. 12/17	MAA/THC
		REV. 5/18	MAA/THC

DOCUMENT NOT CONSIDERED FINAL UNLESS ALL SIGNATURES COMPLETED

P:\2018\181127.02 R-2582A\Structures\Site 1\DGN\STR1_LT\WR2582A_SMU_ AS_650126.dgn
9/5/2018 3:53:13 PM

STD. NO. BAS4(SHT 3a)

DocuSign Envelope ID: 18ACA90A-401B-4229-8AAF-94D960D4156B

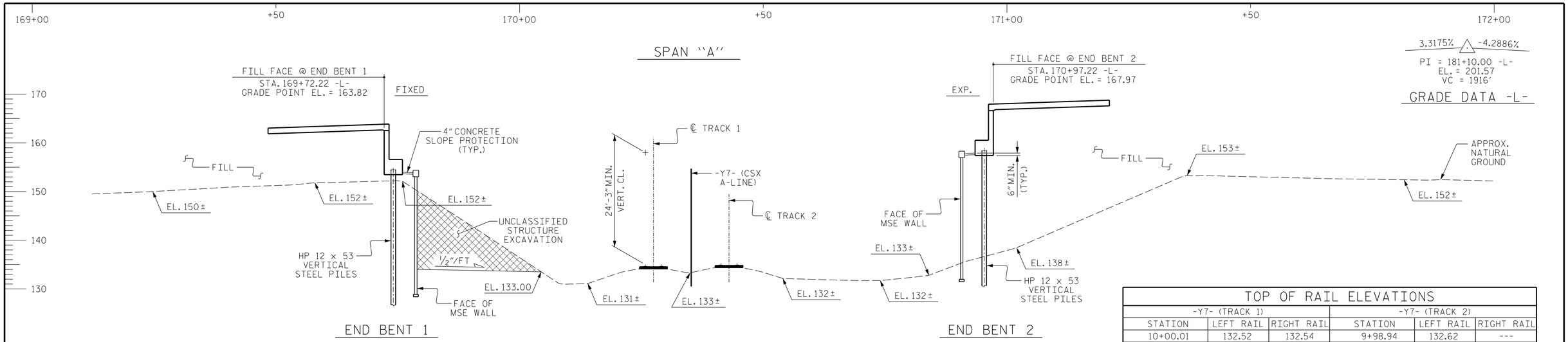

SECTION ALONG RIGHT LANE CONTROL LINE

(SECTIONS AT END BENTS TAKEN AT RIGHT ANGLES)
(FUTURE TRACKS NOT SHOWN FOR CLARITY)

TOP OF RAIL ELEVATIONS					
-Y7- (TRACK 1)			-Y7- (TRACK 2)		
STATION	LEFT RAIL	RIGHT RAIL	STATION	LEFT RAIL	RIGHT RAIL
10+00.01	132.52	132.54	9+98.94	132.62	---
11+18.35	133.03	133.02	10+21.92	---	132.71
12+12.85	133.40	133.41	11+17.05	133.08	133.05
13+07.36	133.72	133.72	12+13.17	133.45	133.45
14+01.37	133.96	133.93	13+06.40	133.83	133.79
14+91.44	134.11	134.10	14+01.96	134.13	134.14
15+86.93	134.25	134.26	14+91.70	134.38	134.38
16+83.03	134.51	134.51	15+87.00	134.57	134.56
17+78.88	134.66	134.68	16+82.32	134.73	134.74
18+77.10	134.72	134.72	17+78.85	134.85	134.84
19+83.12	134.71	134.73	18+76.54	134.90	134.93
			19+82.44	134.97	134.98

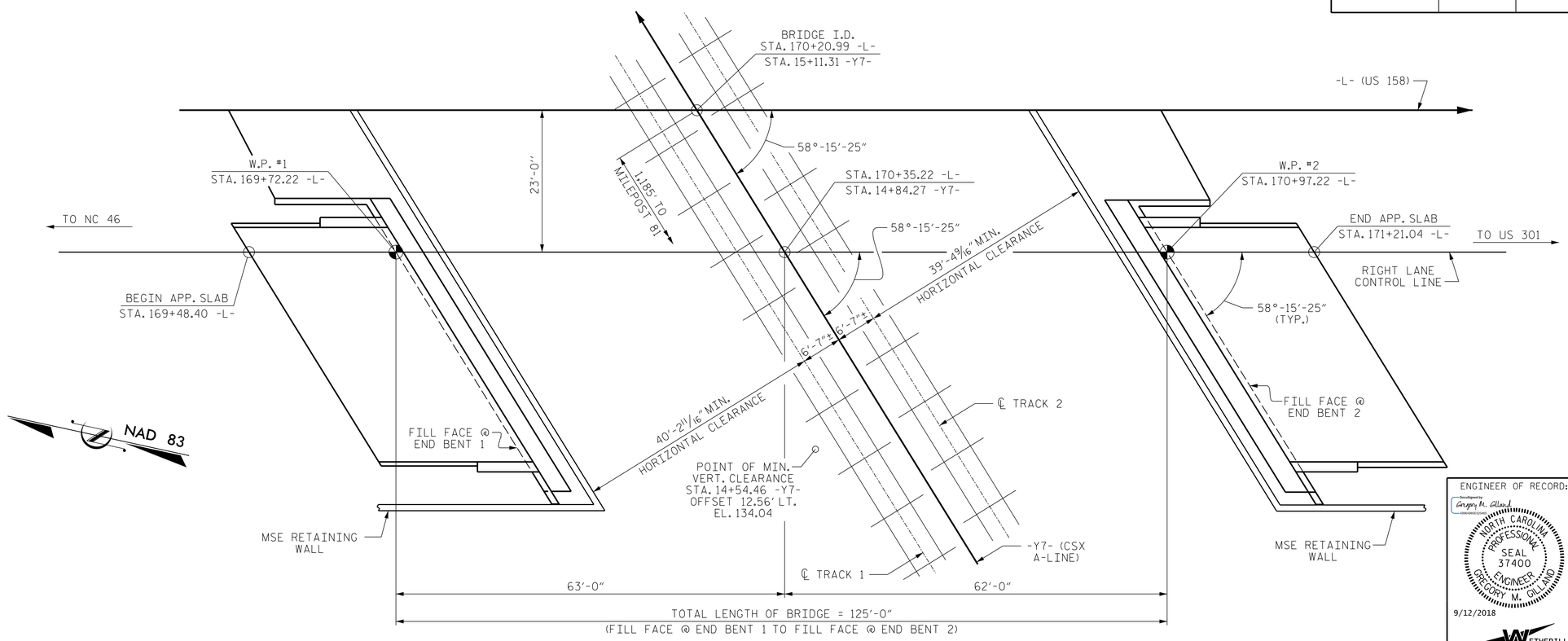

PLAN

(PILES NOT SHOWN IN PLAN VIEW)
(FUTURE TRACKS NOT SHOWN FOR CLARITY)

PROJECT NO. R-2582A
NORTHAMPTON COUNTY
STATION: 170+20.99 -L-
15+11.31 -Y7-
SHEET 1 OF 3
MILE POST 80.78
BRIDGE No. 127

ENGINEER OF RECORD:
Gregory M. Gilland
NORTH CAROLINA PROFESSIONAL SEAL 37400 ENGINEER GREGORY M. GILLAND
9/12/2018

WETHERILL ENGINEERING
1223 Jones Franklin Rd.
Raleigh, N.C. 27606
Bus: 919 851 8077
Fax: 919 851 8107
LICENSE NO. F-0377

STATE OF NORTH CAROLINA
DEPARTMENT OF TRANSPORTATION
RALEIGH

GENERAL DRAWING

RIGHT LANE BRIDGE
ON US 158 OVER CSX A-LINE
BETWEEN NC 46 & US 301

REVISIONS						SHEET NO.
NO.	BY:	DATE:	NO.	BY:	DATE:	S2-1
1			3			TOTAL SHEETS
2			4			27

DRAWN BY : D. HODGE DATE : 5/18
CHECKED BY : G.M. GILLAND DATE : 5/18

DOCUMENT NOT CONSIDERED FINAL UNLESS ALL SIGNATURES COMPLETED

P:\2018\18127.02 R-2582A\Structures\Site 1\DGN\STR2_RTLNR2582A_SMU_ GD_650127.dgn
9/5/2018 4:57:56 PM

DocuSign Envelope ID: BEF411B5-C78F-4B80-9F36-1E200D7052D4

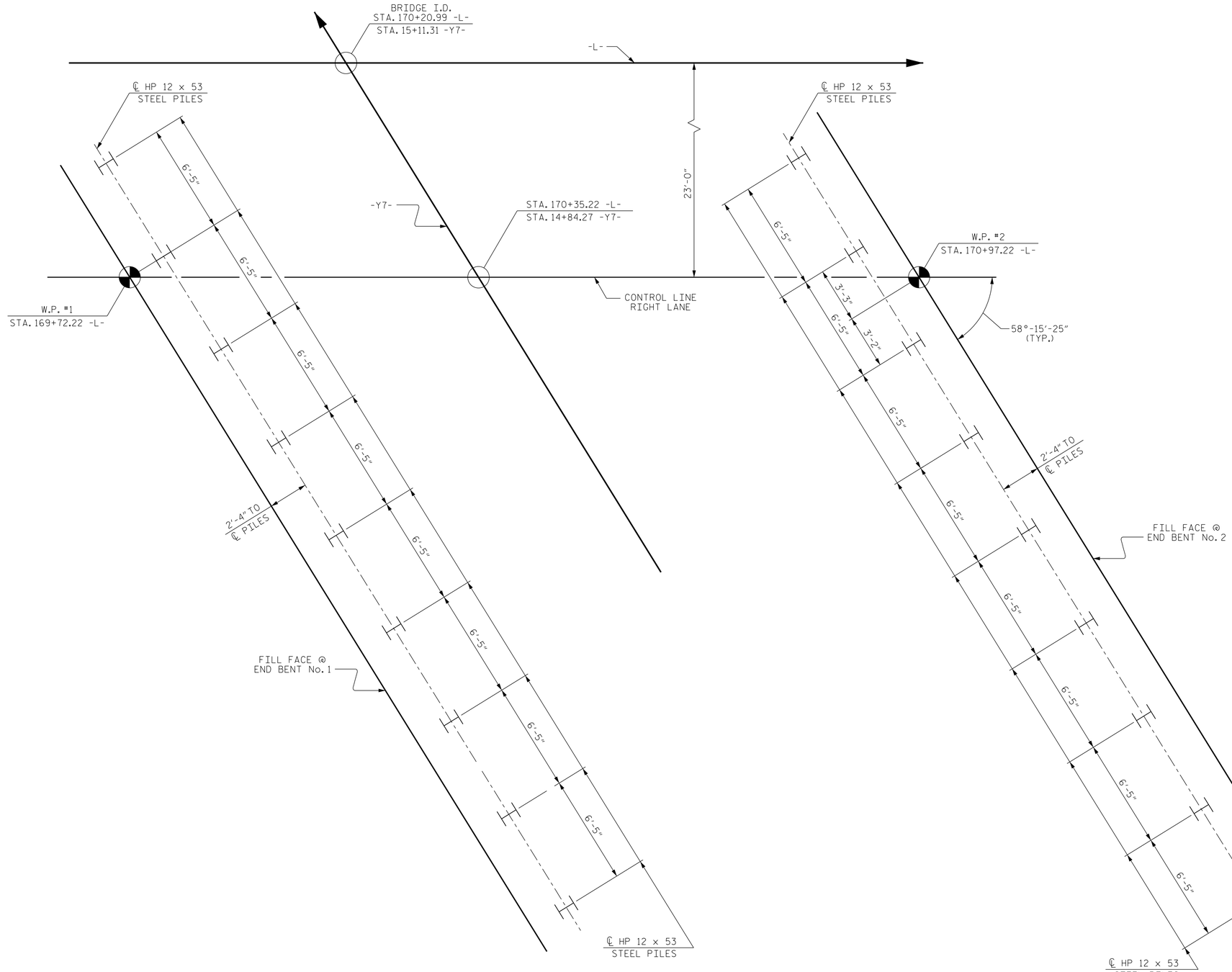

END BENT No. 1

END BENT No. 2

NOTES

SEE ROADWAY PLANS AND SECTION 235 OF THE STANDARD SPECIFICATIONS FOR THE SETTLEMENT GUAGES REQUIRED AT END BENTS No. 1 AND 2.

OBSERVE A 1 MONTH WAITING PERIOD AFTER CONSTRUCTING THE MECHANICALLY STABILIZED EARTH (MSE) ABUTMENT WALLS TO WITHIN 1 FT. OF THE BOTTOM OF CAP ELEVATION BEFORE BEGINNING END BENT CONSTRUCTION AT END BENTS No. 1 AND 2. FOR BRIDGE WAITING PERIODS, SEE ROADWAY PLANS AND SECTION 235 OF THE STANDARD SPECIFICATIONS.

FOR PILES, SEE SECTION 450 OF THE STANDARD SPECIFICATIONS.

PILES AT END BENTS NO. 1 AND 2 ARE DESIGNED FOR A FACTORED RESISTANCE OF 110 TONS PER PILE.

DRIVE PILES AT END BENTS NO. 1 AND 2 TO A REQUIRED DRIVING RESISTANCE OF 150 TONS PER PILE.

TESTING PILES WITH THE PDA DURING DRIVING, RESTRIKING OR REDRIVING MAY BE REQUIRED. THE ENGINEER WILL DETERMINE THE NEED FOR PDA TESTING. FOR PDA TESTING, SEE SECTION 450 OF THE STANDARD SPECIFICATIONS.

PROJECT NO. R-2582A
NORTHAMPTON COUNTY
STATION: 170+20.99 -L-

SHEET 2 OF 3

ENGINEER OF RECORD:
DocuSigned by: Gregory M. Gilland
NORTH CAROLINA PROFESSIONAL SEAL 37400 ENGINEER GREGORY M. GILLAND
1/23/2019

WETHERILL ENGINEERING
1223 Jones Franklin Rd.
Raleigh, N.C. 27606
Bus: 919 851 8077
Fax: 919 851 8107
LICENSE NO. F-0377

STATE OF NORTH CAROLINA
DEPARTMENT OF TRANSPORTATION
RALEIGH

GENERAL DRAWING
RIGHT LANE BRIDGE
ON US 158 OVER CSX A-LINE
BETWEEN NC 46 & US 301

REVISIONS						SHEET NO.
NO.	BY:	DATE:	NO.	BY:	DATE:	S2-2
1			3			TOTAL SHEETS
2			4			27

FOUNDATION LAYOUT

DOCUMENT NOT CONSIDERED FINAL UNLESS ALL SIGNATURES COMPLETED

DRAWN BY : D. HODGE DATE : 5/18
CHECKED BY : G.M. GILLAND DATE : 5/18

P:\2018\18127.02_R-2582A\Structures\Site 1\DGN\STR2_RTLN\R2582A_SMU_ FL_650127.dgn
1/23/2019 10:39:30 AM

DocuSign Envelope ID: 2862EEE0-D568-45AA-8E16-EA956DC50B31

BM #3: R/R SPIKE IN POWER POLE, 392' RT. OF STA. 170+32 -L-, ELEV. = 154.85

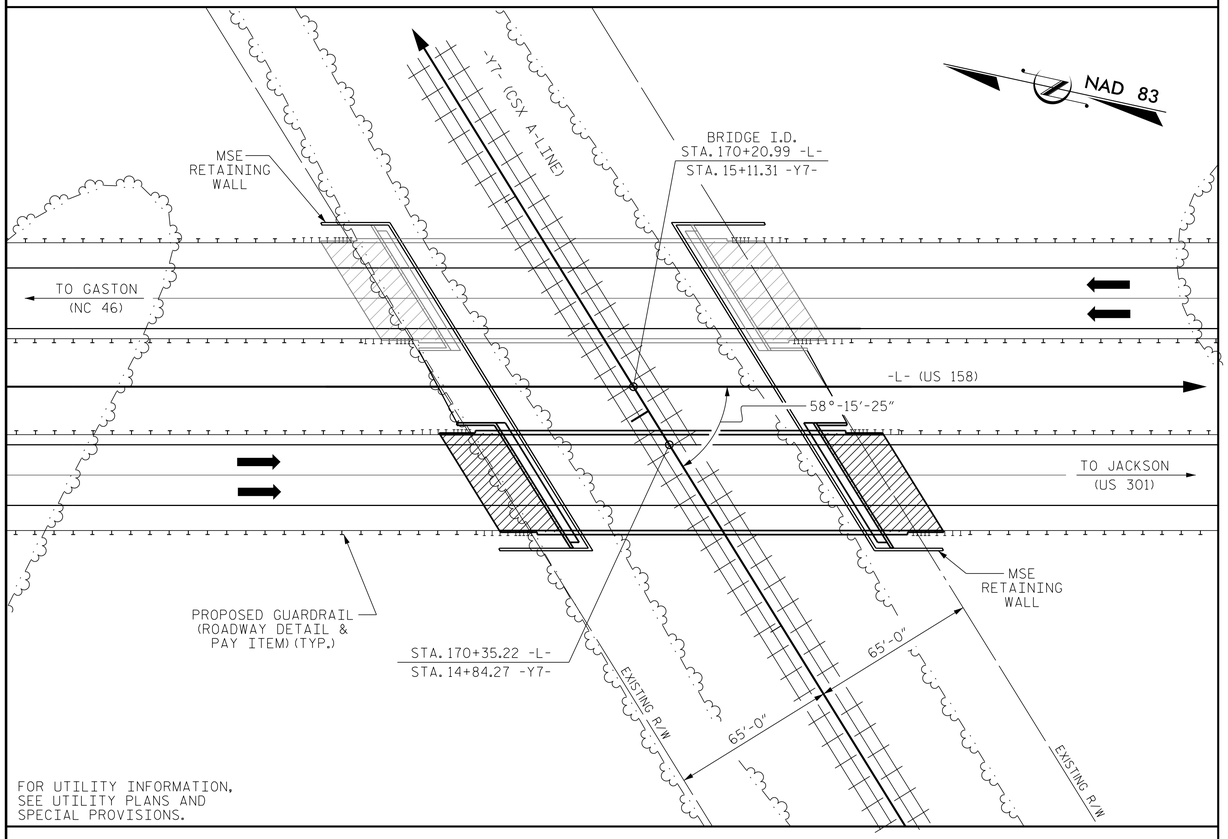

FOR UTILITY INFORMATION, SEE UTILITY PLANS AND SPECIAL PROVISIONS.

LOCATION SKETCH

RAILROAD EROSION CONTROL DETAIL

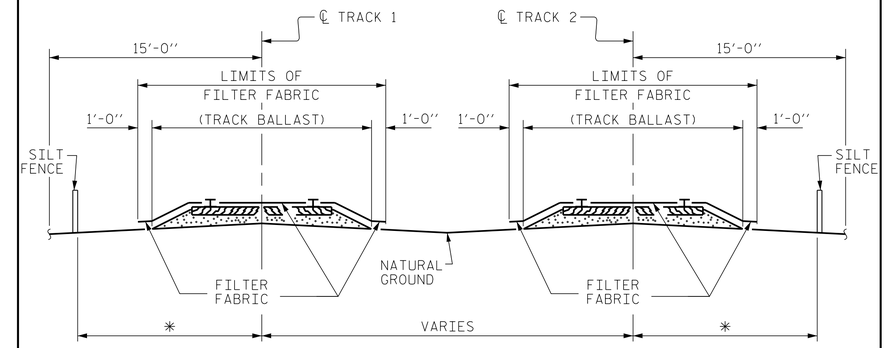

* TO BE DETERMINED BY THE RESIDENT ENGINEER IN CONSULTATION WITH THE RAILROAD ENGINEER.

NOTES

RAILROAD EROSION CONTROL MEASURES SHALL BE INSTALLED PRIOR TO PERFORMING ANY WORK IN THE RAILROAD RIGHT-OF-WAY.

ADDITIONAL EROSION CONTROL MEASURES FOR PROTECTION OF RAILROAD DITCHES MAY BE REQUIRED AS DIRECTED BY THE ENGINEER.

NO SEPARATE PAYMENT WILL BE MADE FOR RAILROAD EROSION CONTROL MEASURES.

LIMITS OF SILT FENCE AND FILTER FABRIC PARALLEL TO RAILROAD SHALL EXTEND A MINIMUM OF 10'-0" OUTSIDE EDGE OF SUPERSTRUCTURE OR TOE OF SLOPE ON CONSTRUCTION. A GREATER LENGTH OF SILT FENCE OR FILTER FABRIC MAY BE REQUIRED IF SO DIRECTED BY THE ENGINEER.

FILTER FABRIC TO BE NAILED TO TIMBER RAIL TIES WITH PRIME SOURCE "GRIP CAP" OR EQUIVALENT. FILTER FABRIC ON SHOULDER TO BE SECURED AS DIRECTED BY THE ENGINEER AND RAILROAD.

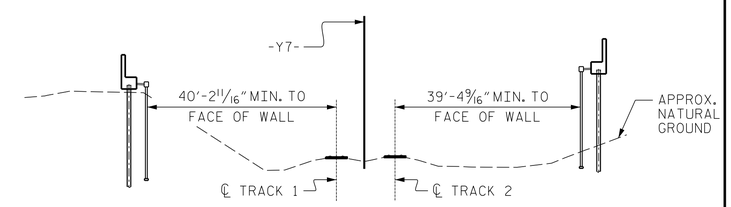

END BENT 1 END BENT 2

SECTION THROUGH RAILROAD

LOOKING IN DIRECTION OF INCREASING STATIONS ON RAILROAD
(SPAN LENGTH BASED ON THIS SECTION)
(FUTURE TRACKS NOT SHOWN FOR CLARITY)

GENERAL NOTES

ASSUMED LIVE LOAD = HL-93 OR ALTERNATE LOADING.

THIS BRIDGE HAS BEEN DESIGNED IN ACCORDANCE WITH THE AASHTO LRFD BRIDGE DESIGN SPECIFICATIONS.

THIS BRIDGE IS LOCATED IN SEISMIC ZONE 1.

FOR OTHER DESIGN DATA AND GENERAL NOTES, SEE SHEET SN.

FOR SUBMITTAL OF WORKING DRAWINGS, SEE SPECIAL PROVISIONS.

FOR FALSEWORK AND FORMWORK, SEE SPECIAL PROVISIONS.

FOR CRANE SAFETY, SEE SPECIAL PROVISIONS.

FOR GROUT FOR STRUCTURES, SEE SPECIAL PROVISIONS.

FOR RAILROAD PROVISIONS, SEE SPECIAL PROVISIONS.

FOR RAILROAD PROVISIONS, SEE SPECIAL PROVISIONS. REMOVABLE FORMS MAY BE USED IN LIEU OF METAL STAY-IN-PLACE FORMS IN ACCORDANCE WITH ARTICLE 420-3 OF THE STANDARD SPECIFICATIONS.

THE RAILROAD TRACK TOP OF RAIL ELEVATIONS ON THE PLANS ARE FROM THE BEST INFORMATION AVAILABLE. PRIOR TO BEGINNING BRIDGE CONSTRUCTION, VERIFY THE TOP OF RAIL ELEVATIONS AND REPORT ANY VARIATIONS TO THE ENGINEER. ANY PLAN REVISIONS NECESSARY TO ACHIEVE THE REQUIRED MINIMUM CLEARANCE WILL BE PROVIDED BY THE DEPARTMENT.

NEEDLE BEAMS WILL NOT BE ALLOWED UNLESS OTHERWISE CALLED FOR ON THE PLANS OR APPROVED BY THE ENGINEER.

THE MATERIAL SHOWN IN THE CROSS-HATCHED AREA SHALL BE EXCAVATED FOR A DISTANCE OF 110 FT EACH SIDE OF CENTERLINE ROADWAY AS DIRECTED BY THE ENGINEER. THIS WORK WILL BE PAID FOR AT THE CONTRACT LUMP SUM PRICE FOR UNCLASSIFIED STRUCTURE EXCAVATION. SEE SECTION 412 OF THE STANDARD SPECIFICATIONS.

ALL EXCAVATED SOIL WITHIN THE RAILROAD RIGHT OF WAY SHALL REMAIN ON CSX PROPERTY AND BE PLACED AT THE DIRECTION OF THE CSX REPRESENTATIVE AND THE ENGINEER.

FOR EROSION CONTROL MEASURES, SEE EROSION CONTROL PLANS.

TOTAL BILL OF MATERIAL

	PDA TESTING	UNCLASSIFIED STRUCTURE EXCAVATION	REINFORCED CONCRETE DECK SLAB	GROOVING BRIDGE FLOORS	CLASS A CONCRETE	BRIDGE APPROACH SLABS	REINFORCING STEEL	MODIFIED 72" PRESTRESSED CONCRETE GIRDERS		PILE DRIVING EQUIPMENT SETUP FOR HP 12 X 53 STEEL PILES	HP 12 x 53 STEEL PILES		PILE REDRIVES	CONCRETE BARRIER RAIL	72" CHAIN LINK FENCE	4" SLOPE PROTECTION	ELASTOMERIC BEARINGS	EXPANSION JOINT SEALS
	EACH	LUMP SUM	SQ. FT.	SQ. FT.	CU. YDS.	LUMP SUM	LBS.	No.	LIN. FT.	EACH	No.	LIN. FT.	EACH	LIN. FT.	LIN. FT.	SQ. YDS.	LUMP SUM	LUMP SUM
SUPERSTRUCTURE			5,054	5,891		LUMP SUM		4	481.38					286.96	240		LUMP SUM	LUMP SUM
END BENT No. 1					43.5		6,766			9	9	855	5			52		
END BENT No. 2					42.6		6,295			9	9	860	5			50		
TOTAL	1	LUMP SUM	5,054	5,891	86.1	LUMP SUM	13,061	4	481.38	18	18	1,715	10	286.96	240	102	LUMP SUM	LUMP SUM

PROJECT NO. R-2582A
NORTHAMPTON COUNTY
STATION: 170+20.99 -L-

SHEET 3 OF 3

ENGINEER OF RECORD: 5/2/2019
NORTH CAROLINA PROFESSIONAL SEAL 37400 ENGINEER GREGORY M. GILLAND
DocuSigned by: Gregory M. Gilland
WETHERILL ENGINEERING
1223 Jones Franklin Rd.
Raleigh, N.C. 27606
Bus: 919 851 8077
Fax: 919 851 8107
LICENSE NO. F-0377

STATE OF NORTH CAROLINA
DEPARTMENT OF TRANSPORTATION
RALEIGH

GENERAL DRAWING
RIGHT LANE BRIDGE
ON US 158 OVER CSX A-LINE
BETWEEN NC 46 & US 301

REVISIONS						SHEET NO.
NO.	BY:	DATE:	NO.	BY:	DATE:	S2-3
1			3			TOTAL SHEETS
2			4			27

DRAWN BY : D. HODGE DATE : 5/18
CHECKED BY : G.M. GILLAND DATE : 5/18

DOCUMENT NOT CONSIDERED FINAL UNLESS ALL SIGNATURES COMPLETED

P:\2018\18127.02_R-2582A\Structures\Site 1\DGN\STR2_RTLN_DGN\R2582A_SMU_GD_650127.dgn
4/30/2019 2:05:20 PM

DocuSign Envelope ID: 18ACA90A-401B-4229-8AAF-94D960D4156B

LOAD AND RESISTANCE FACTOR RATING (LRFR) SUMMARY FOR PRESTRESSED CONCRETE GIRDERS

LEVEL		VEHICLE	WEIGHT (W) (TONS)	CONTROLLING LOAD RATING (#)	MINIMUM RATING FACTORS (RF)	TONS = W × RF	STRENGTH I LIMIT STATE											SERVICE III LIMIT STATE						COMMENT NUMBER
								MOMENT					SHEAR						MOMENT					
							LIVE-LOAD FACTORS (γ_{LL})	DISTRIBUTION FACTORS (DF)	RATING FACTOR	SPAN	GIRDER LOCATION	DISTANCE FROM LEFT END OF SPAN (ft)	DISTRIBUTION FACTORS (DF)	RATING FACTOR	SPAN	GIRDER LOCATION	DISTANCE FROM LEFT END OF SPAN (ft)	LIVE-LOAD FACTORS (γ_{LL})	DISTRIBUTION FACTORS (DF)	RATING FACTOR	SPAN	GIRDER LOCATION	DISTANCE FROM LEFT END OF SPAN (ft)	
DESIGN LOAD RATING		HL-93 (INVENTORY)	N/A	1	1.15	--	1.75	0.940	1.38	A	EL	59.46	1.090	1.15	A	I	95.57	0.80	0.940	1.15	A	EL	59.46	1
		HL-93 (OPERATING)	N/A		1.78	--	1.35	0.940	1.78	A	EL	59.46	1.090	1.80	A	I	95.57	N/A	--	--	--	--	--	
		HS-20 (INVENTORY)	36.000	2	1.68	60.48	1.75	0.940	2.01	A	EL	59.46	1.090	1.89	A	I	95.57	0.80	0.940	1.68	A	EL	59.46	
		HS-20 (OPERATING)	36.000		2.49	89.64	1.35	0.940	2.60	A	EL	59.46	1.090	2.49	A	I	95.57	N/A	--	--	--	--	--	
LEGAL LOAD RATING	SINGLE VEHICLE (SV)	SNSH	13.500		4.06	54.81	1.40	0.940	6.08	A	EL	59.46	1.090	6.17	A	I	95.57	0.80	0.940	4.06	A	EL	59.46	
		SNGARBS2	20.000		2.90	58.00	1.40	0.940	4.34	A	EL	59.46	1.090	4.26	A	I	95.57	0.80	0.940	2.90	A	EL	59.46	
		SNAGRIS2	22.000		2.70	59.40	1.40	0.940	4.04	A	EL	59.46	1.090	3.92	A	I	95.57	0.80	0.940	2.70	A	EL	59.46	
		SNCOTTS3	27.250		2.02	55.05	1.40	0.940	3.02	A	EL	59.46	1.090	2.99	A	I	95.57	0.80	0.940	2.02	A	EL	59.46	
		SNAGGRS4	34.925		1.64	57.28	1.40	0.940	2.45	A	EL	59.46	1.090	2.40	A	I	95.57	0.80	0.940	1.64	A	EL	59.46	
		SNS5A	35.550		1.61	57.24	1.40	0.940	2.40	A	EL	59.46	1.090	2.40	A	I	95.57	0.80	0.940	1.61	A	EL	59.46	
		SNS6A	39.950		1.45	57.93	1.40	0.940	2.18	A	EL	59.46	1.090	2.16	A	I	95.57	0.80	0.940	1.45	A	EL	59.46	
		SNS7B	42.000		1.38	57.96	1.40	0.940	2.07	A	EL	59.46	1.090	2.09	A	I	95.57	0.80	0.940	1.38	A	EL	59.46	
	TRUCK TRACTOR SEMI-TRAILER (TTST)	TNAGRIT3	33.000		1.77	58.41	1.40	0.940	2.64	A	EL	59.46	1.090	2.62	A	I	95.57	0.80	0.940	1.77	A	EL	59.46	
		TNT4A	33.075		1.77	58.54	1.40	0.940	2.65	A	EL	59.46	1.090	2.57	A	I	95.57	0.80	0.940	1.77	A	EL	59.46	
		TNT6A	41.600		1.43	59.49	1.40	0.940	2.14	A	EL	59.46	1.090	2.20	A	I	95.57	0.80	0.940	1.43	A	EL	59.46	
		TNT7A	42.000		1.43	60.06	1.40	0.940	2.14	A	EL	59.46	1.090	2.16	A	I	95.57	0.80	0.940	1.43	A	EL	59.46	
		TNT7B	42.000		1.45	60.90	1.40	0.940	2.18	A	EL	59.46	1.090	2.06	A	I	95.57	0.80	0.940	1.45	A	EL	59.46	
		TNAGRIT4	43.000		1.40	60.20	1.40	0.940	2.09	A	EL	59.46	1.090	2.00	A	I	95.57	0.80	0.940	1.40	A	EL	59.46	
		TNAGT5A	45.000		1.33	59.85	1.40	0.940	1.99	A	EL	59.46	1.090	1.95	A	I	95.57	0.80	0.940	1.33	A	EL	59.46	
		TNAGT5B	45.000	3	1.32	59.40	1.40	0.940	1.97	A	EL	59.46	1.090	1.89	A	I	95.57	0.80	0.940	1.32	A	EL	59.46	

LOAD FACTORS:

DESIGN LOAD RATING FACTORS	LIMIT STATE	γ_{DC}	γ_{DW}
	STRENGTH I	1.25	1.50
	SERVICE III	1.00	1.00

NOTES:

MINIMUM RATING FACTORS ARE BASED ON THE STRENGTH I AND SERVICE III LIMIT STATES.

ALLOWABLE STRESSES FOR SERVICE III LIMIT STATE ARE AS REQUIRED FOR DESIGN.

COMMENTS:

1. CONTROLLING\DESIGN LOAD RATING 1 IS AT TWO LOCATIONS. SEE SUMMARY CHART.
2.
3.
4.

(#) CONTROLLING LOAD RATING

- (1) DESIGN LOAD RATING (HL-93)
- (2) DESIGN LOAD RATING (HS-20)
- (3) LEGAL LOAD RATING ✱✱

✱✱ SEE CHART FOR VEHICLE TYPE

GIRDER LOCATION

- I - INTERIOR GIRDER
- EL - EXTERIOR LEFT GIRDER
- ER - EXTERIOR RIGHT GIRDER

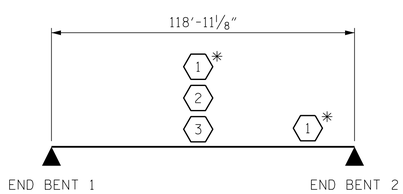

LRFR SUMMARY

✱ SEE COMMENT 1

PROJECT NO. R-2582A
NORTHAMPTON COUNTY
STATION: 170+20.99 -L-

ENGINEER OF RECORD:
Gregory M. Gilland
NORTH CAROLINA PROFESSIONAL SEAL 37400 ENGINEER GREGORY M. GILLAND
9/12/2018

WETHERILL ENGINEERING
1223 Jones Franklin Rd.
Raleigh, N.C. 27606
Bus: 919 851 8077
Fax: 919 851 8107
LICENSE NO. F-0377

STATE OF NORTH CAROLINA
DEPARTMENT OF TRANSPORTATION
RALEIGH
STANDARD
LRFR SUMMARY FOR PRESTRESSED CONCRETE GIRDERS
(NON-INTERSTATE TRAFFIC)
(RIGHT LANE)

REVISIONS						SHEET NO.
NO.	BY:	DATE:	NO.	BY:	DATE:	S2-4
1			3			TOTAL SHEETS
2			4			27

DOCUMENT NOT CONSIDERED FINAL UNLESS ALL SIGNATURES COMPLETED

ASSEMBLED BY : D. HODGE	DATE : 5/18		
CHECKED BY : G.M. GILLAND	DATE : 5/18		
DRAWN BY : MAA 1/08	REV. 11/12/08RR	MAA/GM	
CHECKED BY : GM/DI 2/08	REV. 10/1/11	MAA/GM	
	REV. 12/17	MAA/THC	

STD. NO. LRFR1

P:\2018\181127.02 R-2582A\Structures\Site 1\DGN\STR2_RTLNR2582A_SMU_ LRFR_650127.dgn
9/5/2018 5:03:23 PM

DocuSign Envelope ID: 18ACA90A-401B-4229-8AAF-94D960D4156B

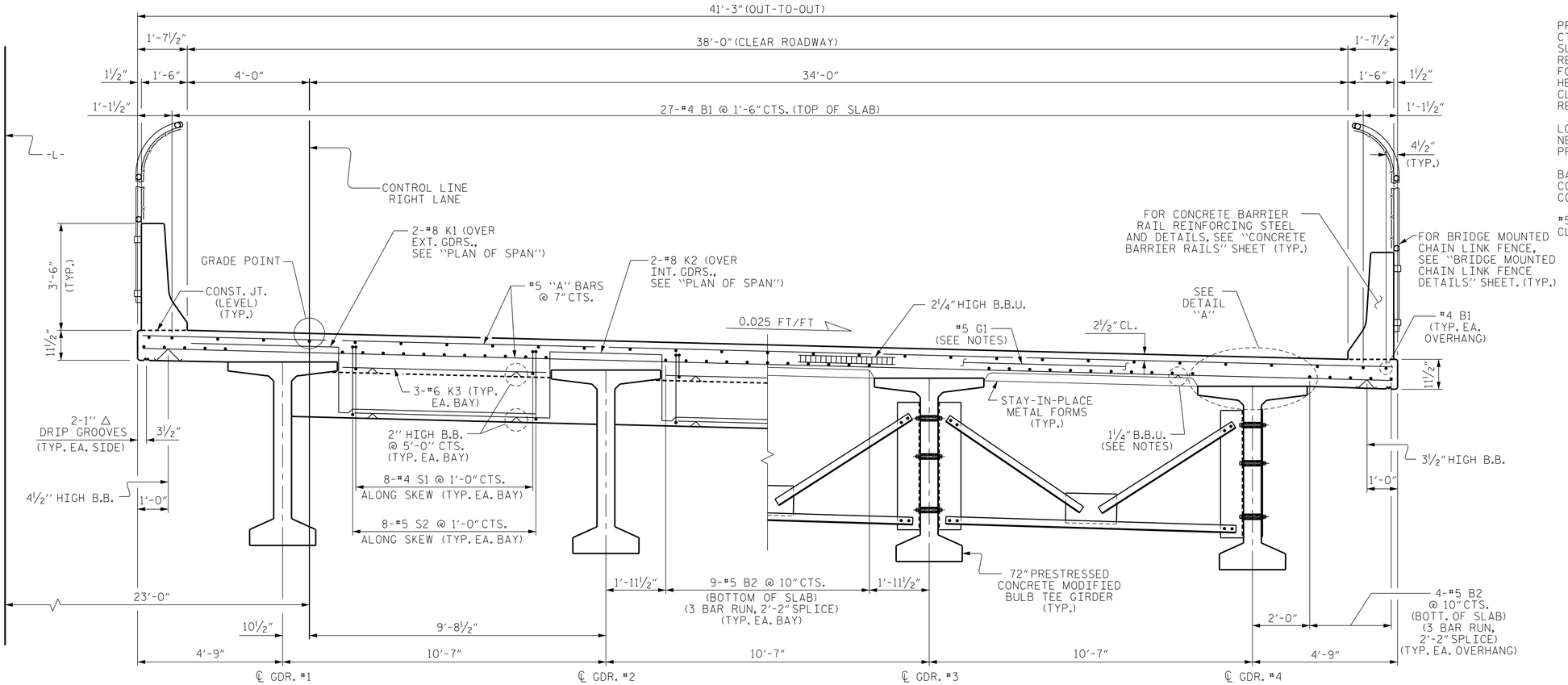

HALF SECTION - END BENT DIAPHRAGM

HALF SECTION - INTERMEDIATE DIAPHRAGM

SEE "INTERMEDIATE STEEL DIAPHRAGMS FOR 72" MODIFIED BULB TEE PRESTRESSED CONCRETE GIRDERS" SHEET FOR DETAILS

TYPICAL SECTION

NOTES

PROVIDE 1¼" HIGH BEAM BOLSTERS UPPER AT 4'-0" CTS. ATOP THE METAL STAY-IN-PLACE FORMS TO SUPPORT THE BOTTOM MAT OF 'A' BARS. WHEN USING REMOVABLE FORMS, PROVIDE CONTINUOUS HIGH CHAIRS FOR METAL DECK (C.H.C.M.) @ 4'-0" CTS. WITH A HEIGHT TO SUPPORT THE BOTTOM MAT OF 'A' BARS A CLEAR DISTANCE OF 2½" ABOVE THE TOP OF THE REMOVABLE FORM.

LONGITUDINAL STEEL MAY BE SHIFTED SLIGHTLY, AS NECESSARY, TO AVOID INTERFERENCE WITH STIRRUPS IN PRESTRESSED CONCRETE GIRDERS.

BARRIER RAIL SHALL NOT BE CAST UNTIL ALL SLAB CONCRETE HAS BEEN CAST AND HAS REACHED A MINIMUM COMPRESSIVE STRENGTH OF 3,000 PSI.

#5 G1 BAR MAY BE SHIFTED SLIGHTLY AS NECESSARY TO CLEAR REINFORCING STEEL AND STIRRUPS.

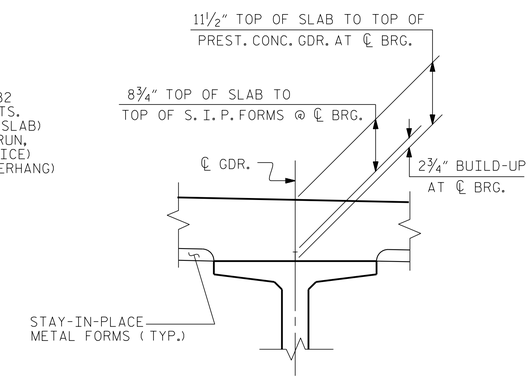

DETAIL "A"

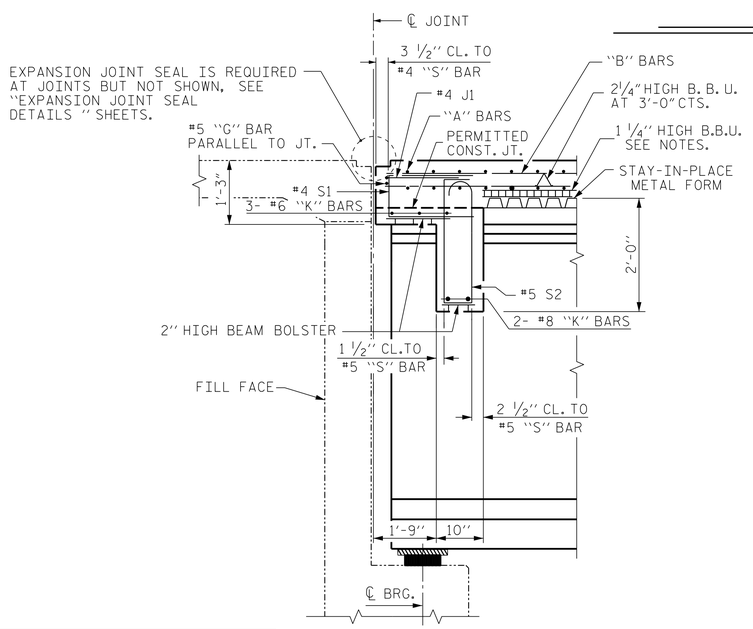

SECTION THRU END BENT DIAPHRAGM

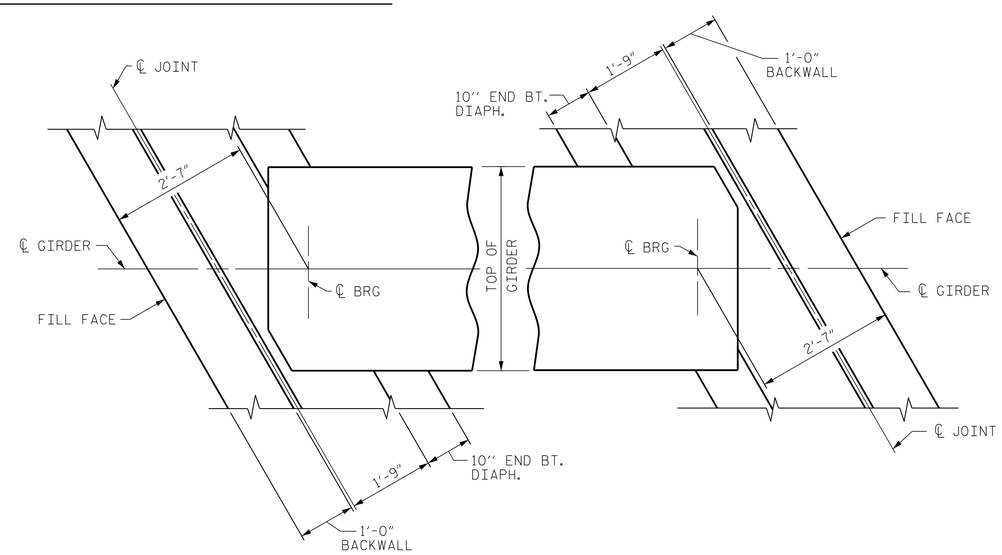

END BENT No. 1 DIAPHRAGM

PLAN

END BENT No. 2 DIAPHRAGM

PROJECT NO. R-2582A

NORTHAMPTON COUNTY

STATION: 170+20.99 -L-

ENGINEER OF RECORD:

Gregory M. Gilland

NORTH CAROLINA PROFESSIONAL SEAL 37400 ENGINEER GREGORY M. GILLAND

9/12/2018

WETHERILL ENGINEERING

1223 Jones Franklin Rd.
Raleigh, N.C. 27606
Bus: 919 851 8077
Fax: 919 851 8107
LICENSE NO. F-0377

STATE OF NORTH CAROLINA
DEPARTMENT OF TRANSPORTATION
RALEIGH

SUPERSTRUCTURE

TYPICAL SECTION
(RIGHT LANE)

REVISIONS						SHEET NO.
NO.	BY:	DATE:	NO.	BY:	DATE:	S2-5
1			3			TOTAL SHEETS
2			4			27

DRAWN BY : D. HODGE DATE : 3/18

CHECKED BY : B.C. HUNT DATE : 3/18

DOCUMENT NOT CONSIDERED FINAL UNLESS ALL SIGNATURES COMPLETED

P:\2018\18127.02 R-2582A\Structures\Site 1\DGN\STR2_RTLN\R2582A_SMU_ TS_650127.dgn
9/5/2018 5:12:05 PM

DocuSign Envelope ID: 18ACA90A-401B-4229-8AAF-94D960D4156B

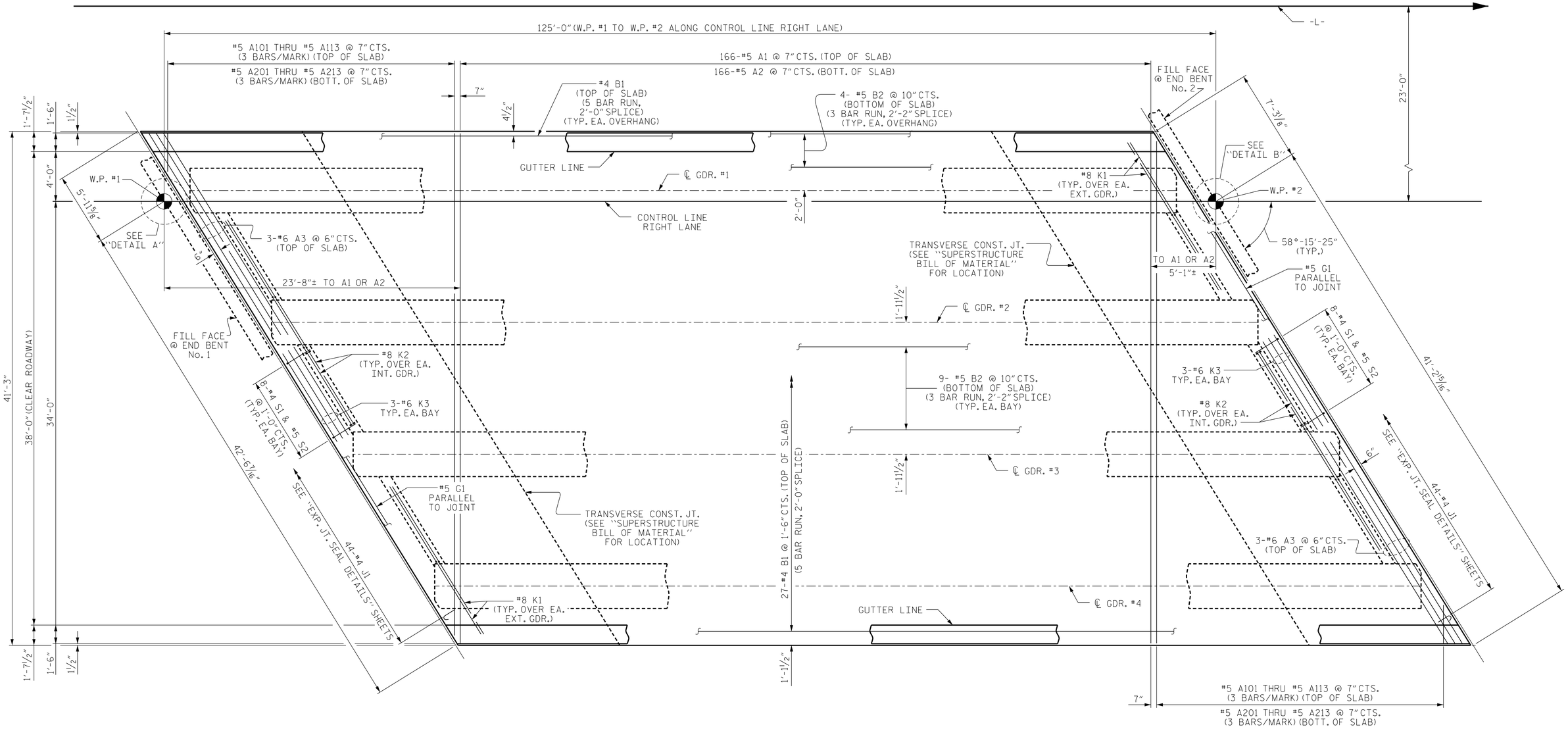

PLAN OF SPAN "A"

PROJECT NO. R-2582A
NORTHAMPTON COUNTY
STATION: 170+20.99 -L-

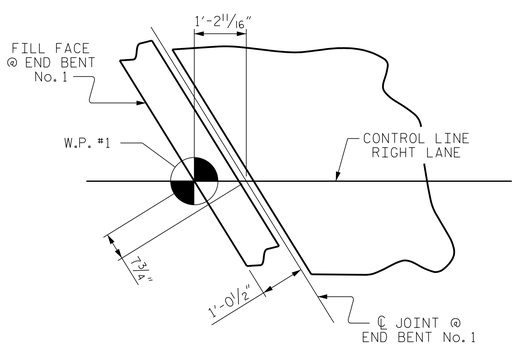

DETAIL A

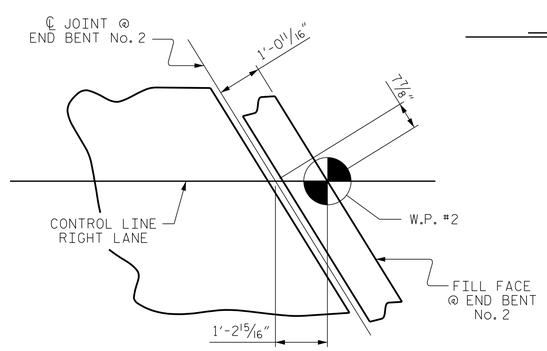

DETAIL B

NOTES :

FOR CONCRETE BARRIER RAIL DETAILS AND REINFORCING STEEL, SEE "CONCRETE BARRIER RAIL" SHEETS.

FOR LOCATIONS OF INTERMEDIATE STEEL DIAPHRAGMS, SEE "FRAMING PLAN" SHEET.

DRAWN BY : D. HODGE DATE : 3/18
CHECKED BY : B.C. HUNT DATE : 3/18

DOCUMENT NOT CONSIDERED FINAL UNLESS ALL SIGNATURES COMPLETED

ENGINEER OF RECORD:
Developed by: Gregory M. Gilland
NORTH CAROLINA PROFESSIONAL SEAL 37400 ENGINEER GREGORY M. GILLAND
9/12/2018

WETHERILL ENGINEERING
1223 Jones Franklin Rd.
Raleigh, N.C. 27606
Bus: 919 851 8077
Fax: 919 851 8107
LICENSE NO. F-0377

STATE OF NORTH CAROLINA
DEPARTMENT OF TRANSPORTATION
RALEIGH

SUPERSTRUCTURE
PLAN OF SPAN
(RIGHT LANE)

REVISIONS						SHEET NO.
NO.	BY:	DATE:	NO.	BY:	DATE:	S2-6
1			3			TOTAL SHEETS
2			4			27

P:\2018\18127.02 R-2582A\Structures\Site 1\DGN\STR2_RTLNR2582A_SMU_ PS_650127.dgn
9/5/2018 5:09:52 PM

DocuSign Envelope ID: 18ACA90A-401B-4229-8AAF-94D960D4156B

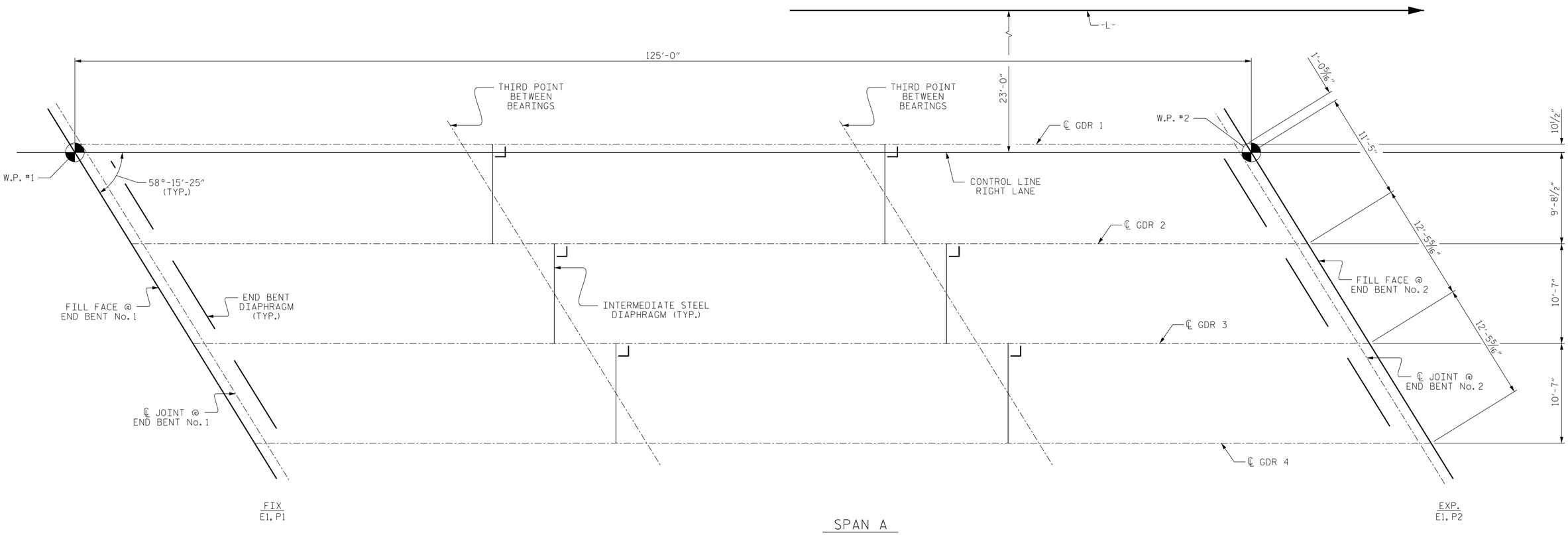

SPAN A

FRAMING PLAN

FOR LOCATION OF BOLT HOLES IN GIRDERS SEE SHEET ENTITLED "PRESTRESSED CONCRETE GIRDER DETAILS"

PROJECT NO. R-2582A

NORTHAMPTON COUNTY

STATION: 170+20.99 -L-

ENGINEER OF RECORD:

Gregory M. Gilland

NORTH CAROLINA PROFESSIONAL SEAL 37400 ENGINEER GREGORY M. GILLAND

9/12/2018

WETHERILL ENGINEERING

1223 Jones Franklin Rd.
Raleigh, N.C. 27606
Bus: 919 851 8077
Fax: 919 851 8107
LICENSE NO. F-0377

STATE OF NORTH CAROLINA
DEPARTMENT OF TRANSPORTATION
RALEIGH

SUPERSTRUCTURE
FRAMING PLAN
(RIGHT LANE)

REVISIONS						SHEET NO.
NO.	BY:	DATE:	NO.	BY:	DATE:	S2-7
1			3			TOTAL SHEETS
2			4			27

DOCUMENT NOT CONSIDERED FINAL UNLESS ALL SIGNATURES COMPLETED

DRAWN BY : D. HODGE DATE : 3/18
CHECKED BY : B.C. HUNT DATE : 3/18

P:\2018\18127.02 R-2582A\Structures\Site 1\DGN\STR2_RTLN\R2582A_SMU_ FP_650127.dgn
9/5/2018 4:57:10 PM

DocuSign Envelope ID: E50CC9EE-D9EB-4902-9CE0-04433B70DDF9

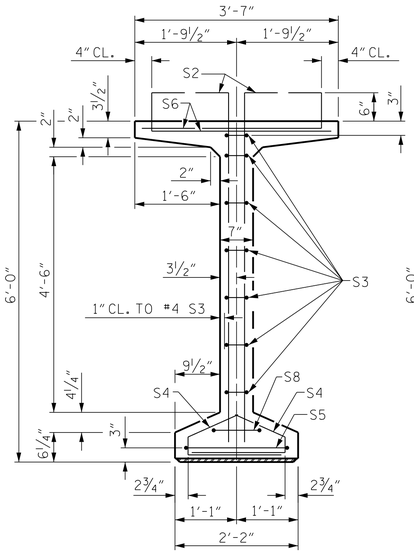

SECTION A-A

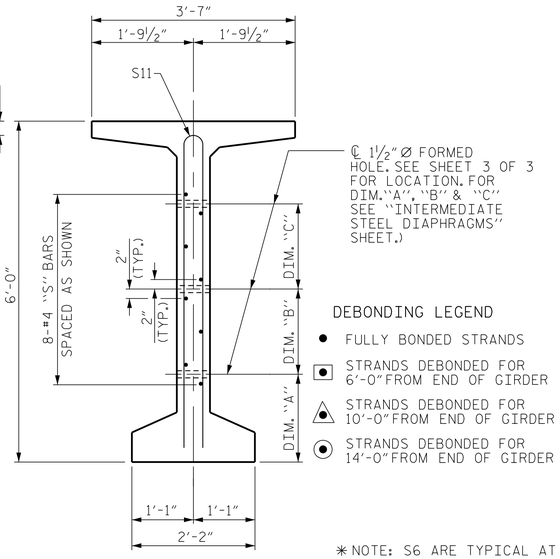

SECTION C-C

(S1, S6 AND S9 BARS NOT SHOWN)

DEBONDING LEGEND

- FULLY BONDED STRANDS
- STRANDS DEBONDED FOR 6'-0" FROM END OF GIRDER
- STRANDS DEBONDED FOR 10'-0" FROM END OF GIRDER
- STRANDS DEBONDED FOR 14'-0" FROM END OF GIRDER

✱ NOTE: S6 ARE TYPICAL AT ALL S1 & S2 EXCEPT AT CORNER CLIP OF TOP FLANGE

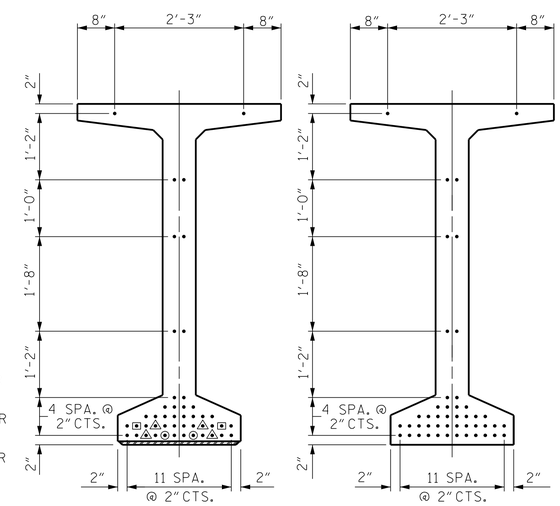

0.6" Ø LOW RELAXATION STRAND LAYOUT

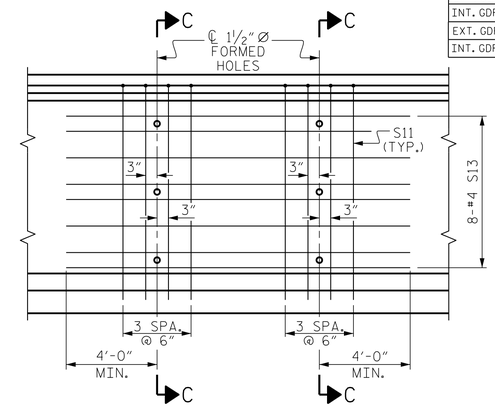

PARTIAL ELEVATION

SHOWING INTERMEDIATE STEEL DIAPHRAGM REINFORCING STEEL FOR INTERIOR GIRDER

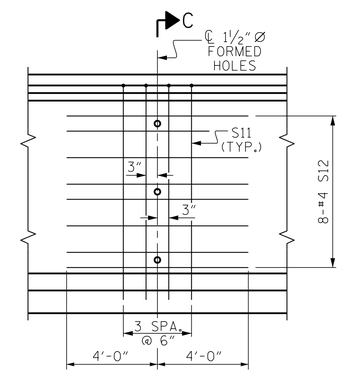

PARTIAL ELEVATION

SHOWING INTERMEDIATE STEEL DIAPHRAGM REINFORCING STEEL FOR EXTERIOR GIRDER

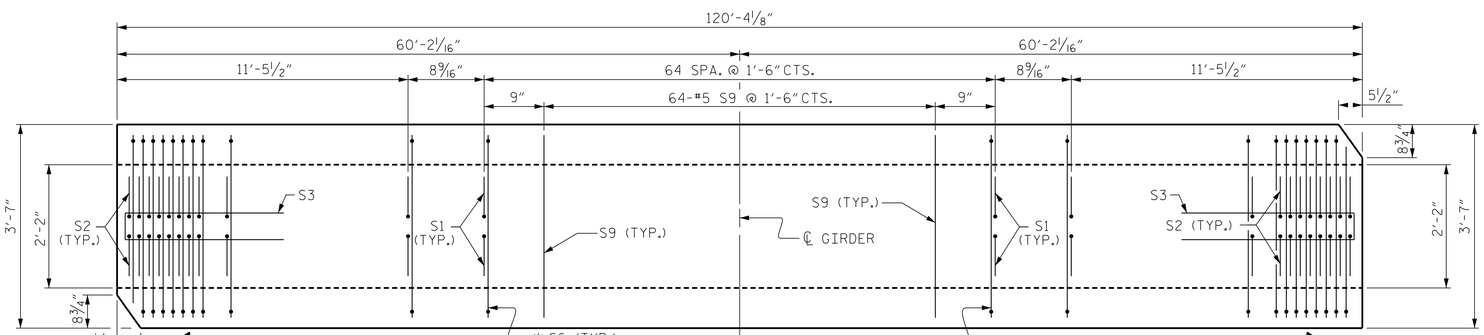

PLAN OF GIRDER

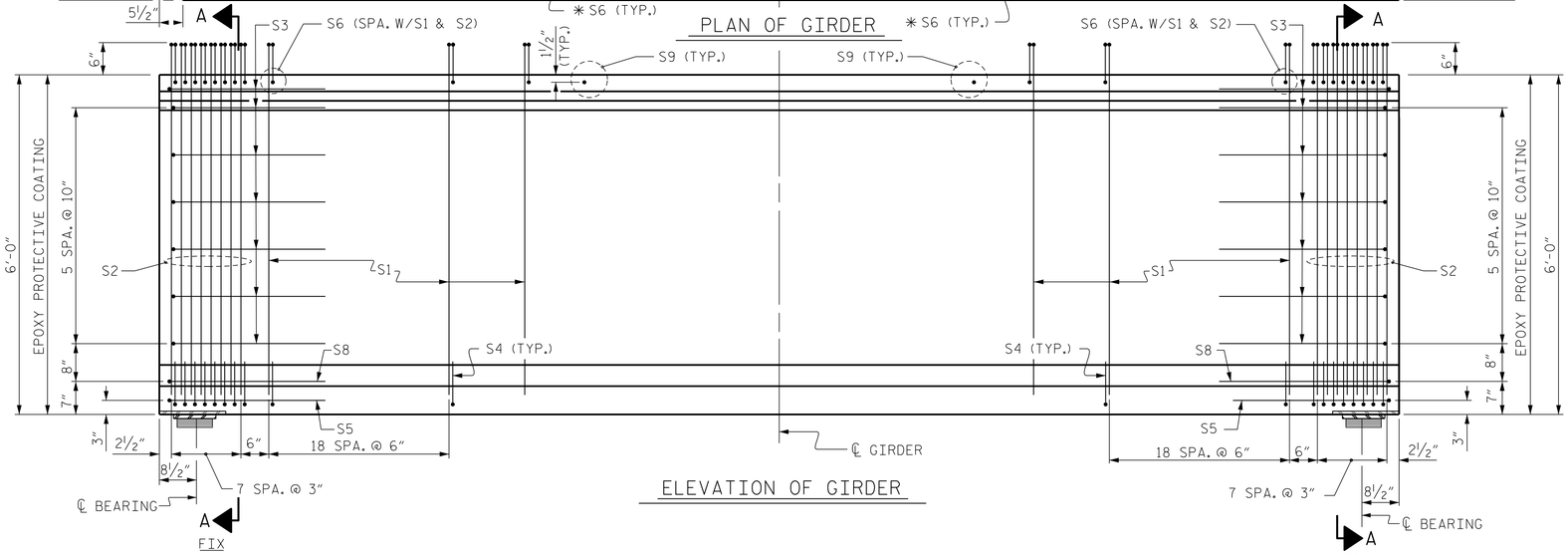

ELEVATION OF GIRDER

0.6" Ø L. R. GRADE 270 STRANDS

AREA (SQUARE INCHES)	ULTIMATE STRENGTH (LBS. PER STRAND)	APPLIED PRESTRESS (LBS. PER STRAND)
0.217	58,600	43,950

REINFORCING STEEL FOR ONE GDR

	BAR	NUMBER	SIZE	TYPE	LENGTH	WEIGHT
	S1	206	#4	1	6'-10"	940
	S2	32	#5	1	6'-10"	228
	S3	14	#4	2	8'-5"	79
	S4	108	#4	3	3'-0"	216
	S5	2	#5	2	9'-10"	21
	S6	236	#5	4	4'-4"	1067
	S8	2	#5	2	9'-0"	19
	S9	64	#5	STR	3'-3"	217
EXT. GDR.	S11	8	#5	5	11'-6"	96
INT. GDR.	S11	16	#5	5	11'-6"	192
EXT. GDR.	S12	16	#4	STR	8'-0"	86
INT. GDR.	S13	16	#4	STR	14'-7"	156

BAR TYPES

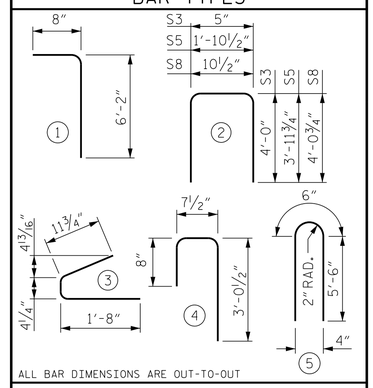

ALL BAR DIMENSIONS ARE OUT-TO-OUT

QUANTITIES FOR ONE GIRDER

	REINFORCING STEEL	9500 PSI CONCRETE	0.6" Ø L.R. STRANDS
	LB.	C.Y.	No.
EXTERIOR GIRDER	2969	25.8	46
INTERIOR GIRDER	3135	25.8	46

GIRDERS REQUIRED

NUMBER	LENGTH	TOTAL LENGTH
4	120'-4⅛"	481'-4½"

PROJECT NO. R-2582A

NORTHAMPTON COUNTY

STATION: 170+20.99 -L-

SHEET 1 OF 3

ENGINEER OF RECORD:

Gregory M. Gilland

NORTH CAROLINA PROFESSIONAL SEAL 37400 ENGINEER GREGORY M. GILLAND

10/16/2018

WETHERILL ENGINEERING

1223 Jones Franklin Rd.
Raleigh, N.C. 27606
Bus: 919 851 8077
Fax: 919 851 8107
LICENSE NO. F-0377

STATE OF NORTH CAROLINA
DEPARTMENT OF TRANSPORTATION
RALEIGH

72" PRESTRESSED CONCRETE MODIFIED BULB TEE (RIGHT LANE)

REVISIONS						SHEET NO.
NO.	BY:	DATE:	NO.	BY:	DATE:	S2-8
1			3			TOTAL SHEETS
2			4			27

DRAWN BY : D. HODGE DATE : 3/18
CHECKED BY : B.C. HUNT DATE : 3/18

DOCUMENT NOT CONSIDERED FINAL UNLESS ALL SIGNATURES COMPLETED

P:\2018\181127.02_R-2582A\Structures\Site 1\DGN\STR2_RTLNR2582A_SMU_ PCG_650127.dgn
10/16/2018 1:54:37 PM

DocuSign Envelope ID: 18ACA90A-401B-4229-8AAF-94D960D4156B

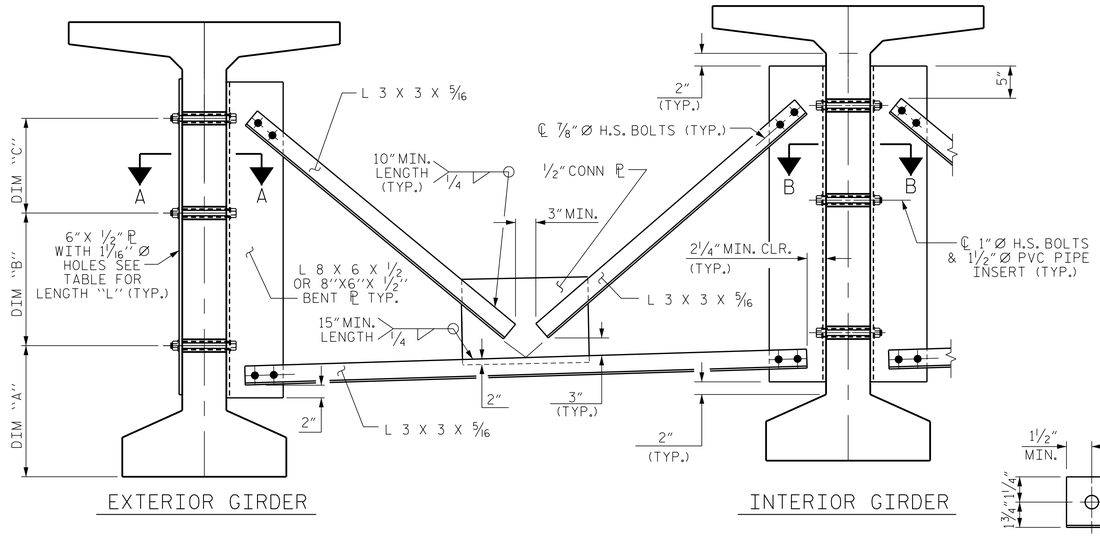

PART SECTION AT INTERMEDIATE DIAPHRAGM

(72" BULB TEE GIRDER SHOWN)

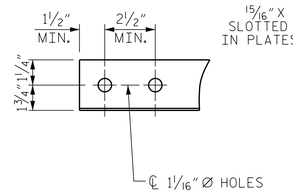

ANGLE END

(L 3 X 3 X 5/16)

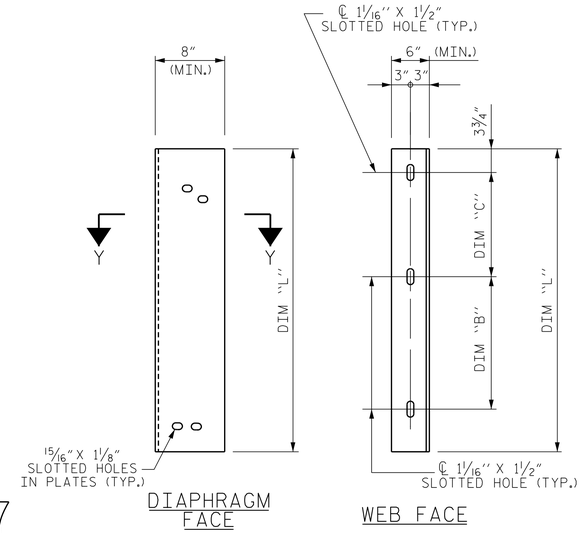

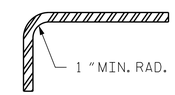

SECTION Y-Y

CONNECTOR PLATE DETAIL

STRUCTURAL STEEL NOTES

ALL INTERMEDIATE DIAPHRAGM STEEL AND CONNECTOR PLATES SHALL BE AASHTO M270 GRADE 50 OR APPROVED EQUAL.

TENSION ON THE ASTM A325 BOLTS THROUGH THE ANGLE MEMBER SHALL BE CALIBRATED USING DIRECT TENSION INDICATOR WASHERS IN ACCORDANCE WITH THE STANDARD SPECIFICATIONS.

TENSION ON THE ASTM A449 BOLTS THROUGH THE GIRDER WEB SHALL BE SNUG TIGHTENED FOLLOWED BY AN ADDITIONAL 1/4 TURN.

THE PLATES, BENT PLATES, AND ANGLES SHALL BE GALVANIZED OR METALLIZED IN ACCORDANCE WITH THE STANDARD SPECIFICATIONS. FOR THERMAL SPRAYED COATINGS (METALLIZATION), SEE SPECIAL PROVISIONS.

FOR METALLIZATION, APPLY AN 8 MIL THICK 99.99 PERCENT ZINC (W-Zn-1) THERMAL SPRAYED COATING WITH A 0.5 MIL THICK SEAL COAT TO ALL STEEL DIAPHRAGM SURFACES IN ACCORDANCE WITH THE THERMAL SPRAYED COATINGS SPECIAL PROVISION AND SECTION 442 OF THE STANDARD SPECIFICATIONS.

GALVANIZE THE HIGH STRENGTH BOLTS, NUTS, WASHERS AND DIRECT TENSION INDICATORS IN ACCORDANCE WITH THE STANDARD SPECIFICATIONS.

USE AN ASTM F436 HARDENED WASHER WITH STANDARD AND SLOTTED HOLES UNDER EACH BOLT HEAD AND NUT.

FOR BOLTS THROUGH THE GIRDER WEB, PROVIDE SUFFICIENT LENGTH OF THREADS ON ALL BOLTS TO ACCOMMODATE WASHERS AND THE THICKNESS OF CONNECTING MEMBER PLUS AT LEAST 1/4" PROJECTION BEYOND THE NUT.

INTERMEDIATE DIAPHRAGM ASSEMBLY SHALL COMPLY WITH SECTION 1072 OF THE STANDARD SPECIFICATIONS.

SUBMIT TWO SETS OF WORKING DRAWINGS FOR THE INTERMEDIATE DIAPHRAGM ASSEMBLY FOR REVIEW, COMMENTS AND ACCEPTANCE. AFTER REVIEW, COMMENTS, AND ACCEPTANCE, SUBMIT SEVEN SETS FOR DISTRIBUTION.

IN THE EXTERIOR BAYS, PLACE TEMPORARY STRUTS BETWEEN PRESTRESSED GIRDERS ADJACENT TO THE STEEL DIAPHRAGMS. STRUTS SHALL REMAIN IN PLACE 3 DAYS AFTER CONCRETE IS PLACED.

THE COST OF THE STEEL DIAPHRAGMS AND ASSEMBLIES SHALL BE INCLUDED IN THE UNIT PRICE BID FOR PRESTRESSED CONCRETE GIRDERS.

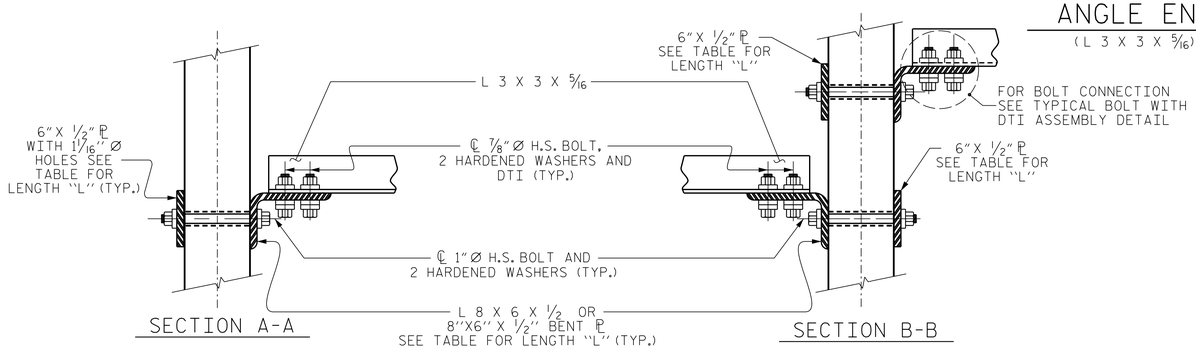

CONNECTION DETAILS

TABLE

GIRDER TYPE	DIM "A"	DIM "B"	DIM "C"	DIM "L"
72" BULB TEE	1'-7"	1'-8"	1'-8"	4'-2"

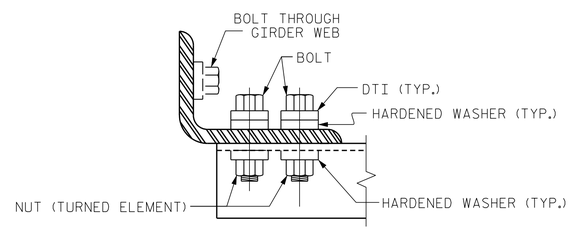

BOLT WITH DTI ASSEMBLY DETAIL

PROJECT NO. R-2582A

NORTHAMPTON COUNTY

STATION: 170+20.99 -L-

SHEET 2 OF 3

ENGINEER OF RECORD:

Gregory M. Gilland

NORTH CAROLINA PROFESSIONAL SEAL 37400 ENGINEER GREGORY M. GILLAND

9/12/2018

WETHERILL ENGINEERING

1223 Jones Franklin Rd.
Raleigh, N.C. 27606
Bus: 919 851 8077
Fax: 919 851 8107
LICENSE NO. F-0377

STATE OF NORTH CAROLINA
DEPARTMENT OF TRANSPORTATION
RALEIGH

STANDARD
INTERMEDIATE
STEEL DIAPHRAGMS FOR
72" MODIFIED BULB TEE
PRESTRESSED CONCRETE GIRDERS
(RIGHT LANE)

REVISIONS						SHEET NO.
NO.	BY:	DATE:	NO.	BY:	DATE:	S2-9
1			3			TOTAL SHEETS
2			4			27

DOCUMENT NOT CONSIDERED FINAL UNLESS ALL SIGNATURES COMPLETED

ASSEMBLED BY : D. HODGE		DATE :	3/18
CHECKED BY : B.C. HUNT		DATE :	3/18
DRAWN BY : RWW 11/09	REV. 10/1/11		MAA/GM
CHECKED BY : GM 11/09	REV. 12/17		MAA/THC

P:\2018\18127.02 R-2582A\Structures\Site 1\DGN\STR2_RTLWR2582A_SMU_ PCG_650127.dgn
9/5/2018 5:07:56 PM

STD. NO. PCG11 (SHT 1)

DocuSign Envelope ID: 18ACA90A-401B-4229-8AAF-94D960D4156B

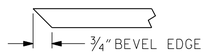

SECTION "F"

(SEE NOTES)

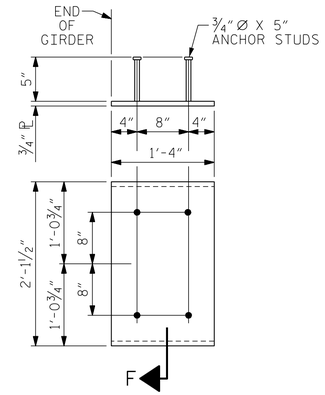

EMBEDDED PLATE "B-1" DETAILS FOR 72" MODIFIED BULB TEES

(2 REQ'D PER GIRDER)

NOTES

ALL PRESTRESSING STRANDS SHALL BE 7-WIRE LOW-RELAXATION GRADE 270 STRANDS AND SHALL CONFORM TO AASHTO M203 EXCEPT FOR SAMPLING REQUIREMENTS WHICH SHALL BE IN ACCORDANCE WITH THE STANDARD SPECIFICATIONS.

ALL REINFORCING STEEL SHALL BE GRADE 60.

APPLY EPOXY PROTECTIVE COATING TO END OF GIRDER SURFACES INDICATED IN ELEVATION VIEW.

EMBEDDED PLATE "B-1" SHALL BE GALVANIZED IN ACCORDANCE WITH THE STANDARD SPECIFICATIONS.

ANCHOR STUDS SHALL CONFORM TO AASHTO M169 GRADES 1010 THROUGH 1020 OR APPROVED EQUAL, AND SHALL MEET THE TYPE "B" REQUIREMENTS OF SUBSECTION 7.3 OF THE ANSI/AASHTO/AWS D1.5 BRIDGE WELDING CODE.

AT ENDS OF GIRDERS TO BE EMBEDDED IN CONCRETE DIAPHRAGMS OR END WALLS, PRESTRESSING STRANDS MAY EXTEND A MAXIMUM OF 2" BEYOND THE GIRDER ENDS. OTHERWISE, PRESTRESSING STRANDS SHALL BE CUT FLUSH WITH THE GIRDER ENDS.

THE TRANSFER OF LOAD FROM THE ANCHORAGES TO THE GIRDER SHALL BE DONE WHEN CONCRETE HAS REACHED A COMPRESSIVE STRENGTH OF NOT LESS THAN 7,500 PSI.

DEPENDING ON THE TYPE OF SYSTEM USED TO SUPPORT THE DECK SLAB FORMS, PRESET ANCHORS MAY BE NECESSARY IN THE PRESTRESSED CONCRETE GIRDER.

THE TOP SURFACE OF THE GIRDER, EXCLUDING THE OUTSIDE 4", SHALL BE RAKED TO A DEPTH OF 1/4".

WHEN DRAPED STRANDS ARE DETAILED, THE LONGITUDINAL LOCATION OF THE HOLD DOWN DEVICES SHALL BE WITHIN 6" OF THE LOCATION SHOWN AND THE CENTER OF GRAVITY OF THE GROUP OF DRAPED STRANDS SHALL BE LOCATED WITHIN 1/2" OF THE THEORETICAL LOCATION SHOWN.

A 2" x 2" CHAMFER IS ALLOWED AT THE INTERSECTION OF THE WEB AND THE BOTTOM FLANGE OF THE 72" MODIFIED BULB TEES.

THE CONTRACTOR HAS THE OPTION TO PROVIDE, AT NO ADDITIONAL COST TO THE DEPARTMENT, 2 ADDITIONAL STRANDS AT THE TOP OF THE GIRDER TO FACILITATE TYING OF THE REINFORCING STEEL. THESE STRANDS SHALL BE PULLED TO A LOAD OF 4500 lbs.

DEAD LOAD DEFLECTION TABLE FOR GIRDERS

0.6" Ø LOW RELAXATION	SPAN A GIRDERS #1 THRU #4																				
TWENTIETH POINTS	0	.05	.10	.15	.20	.25	.30	.35	.40	.45	.50	.55	.60	.65	.70	.75	.80	.85	.90	.95	0
CAMBER (GIRDER ALONE IN PLACE) ↑	0.000	0.046	0.091	0.133	0.172	0.207	0.236	0.259	0.276	0.286	0.290	0.286	0.276	0.259	0.236	0.207	0.172	0.133	0.091	0.046	0.000
* DEFLECTION DUE TO SUPERIMPOSED D.L. ↓	0.000	0.029	0.059	0.087	0.115	0.137	0.159	0.173	0.187	0.192	0.197	0.192	0.187	0.173	0.159	0.137	0.115	0.087	0.059	0.029	0.000
FINAL CAMBER ↑	0	3/16"	3/8"	9/16"	11/16"	13/16"	15/16"	1 1/16"	1 1/16"	1 1/8"	1 1/8"	1 1/8"	1 1/16"	1 1/16"	15/16"	13/16"	11/16"	9/16"	3/8"	3/16"	0

* INCLUDES FUTURE WEARING SURFACE
ALL VALUES ARE SHOWN IN FEET (DECIMAL FORM), EXCEPT "FINAL CAMBER", WHICH IS GIVEN IN INCHES (FRACTION FORM).

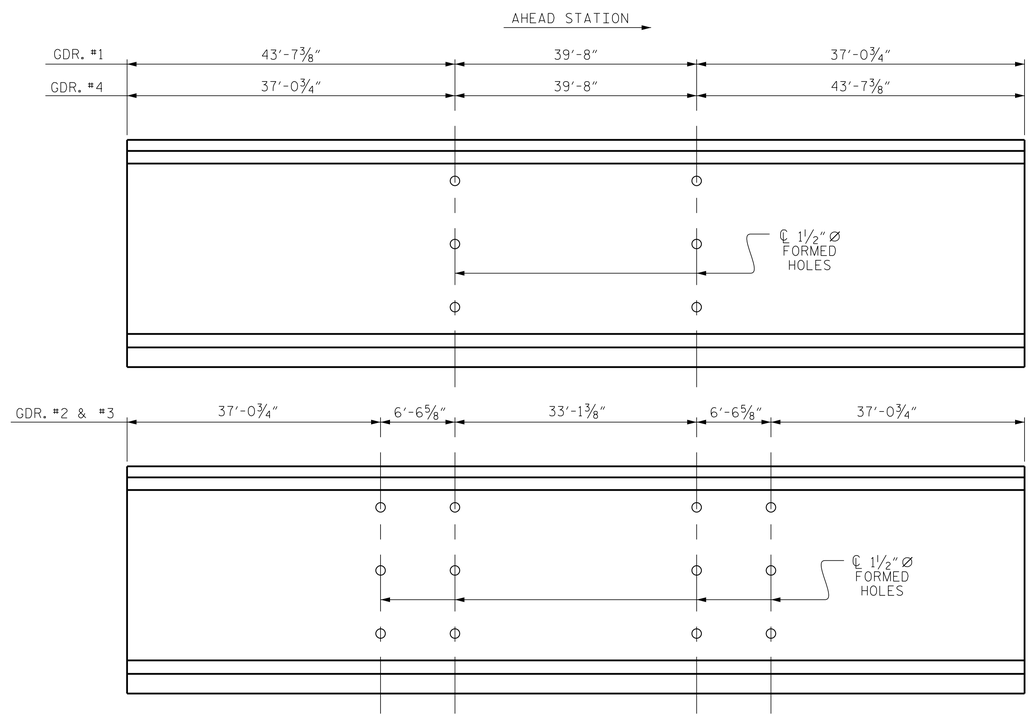

LOCATION OF BOLT HOLES IN GIRDERS

PROJECT NO. R-2582A
NORTHAMPTON COUNTY
STATION: 170+20.99 -L-

SHEET 3 OF 3

ENGINEER OF RECORD:
Gregory M. Gilland
NORTH CAROLINA PROFESSIONAL SEAL 37400 ENGINEER GREGORY M. GILLAND
9/12/2018

WETHERILL ENGINEERING
1223 Jones Franklin Rd.
Raleigh, N.C. 27606
Bus: 919 851 8077
Fax: 919 851 8107
LICENSE NO. F-0377

STATE OF NORTH CAROLINA
DEPARTMENT OF TRANSPORTATION
RALEIGH

STANDARD

PRESTRESSED CONCRETE GIRDER DETAILS

(RIGHT LANE)

REVISIONS						SHEET NO.
NO.	BY:	DATE:	NO.	BY:	DATE:	S2-10
1			3			TOTAL SHEETS
2			4			27

DOCUMENT NOT CONSIDERED FINAL UNLESS ALL SIGNATURES COMPLETED

ASSEMBLED BY : D. HODGE		DATE :	3/18
CHECKED BY : B.C. HUNT		DATE :	3/18
DRAWN BY : ELR 11/91	REV. 1/15		MAA/TMG
CHECKED BY : GRP 11/91	REV. 2/15		MAA/TMG
	REV. 12/17		MAA/THC

P:\2018\181270.2 R-2582A\Structures\Site 1\DGN\STR2_RTLN\R2582A_SMU_ PCG_650127.dgn
9/5/2018 5:08:46 PM

STD. NO. PCG9 (Sht. 4)

DocuSign Envelope ID: 18ACA90A-401B-4229-8AAF-94D960D4156B

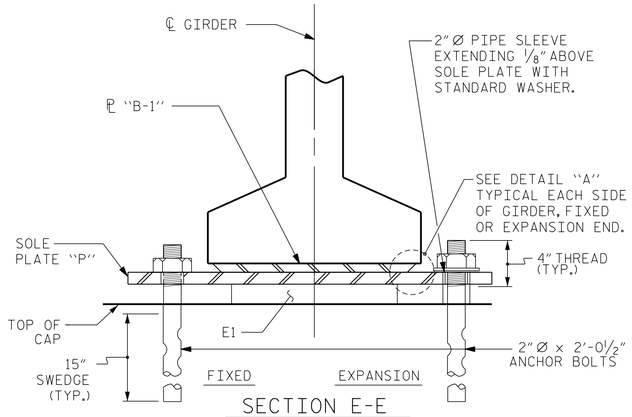

SECTION E-E

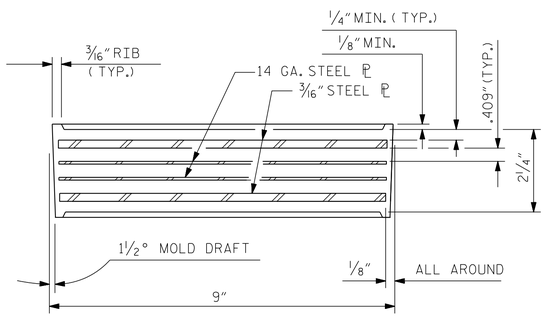

TYPICAL SECTION OF ELASTOMERIC BEARINGS

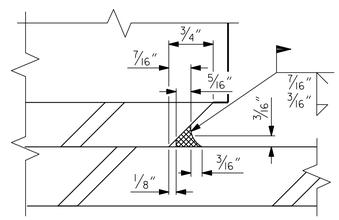

DETAIL "A"

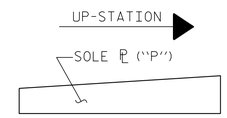

SOLE ℙ PLACEMENT DETAIL

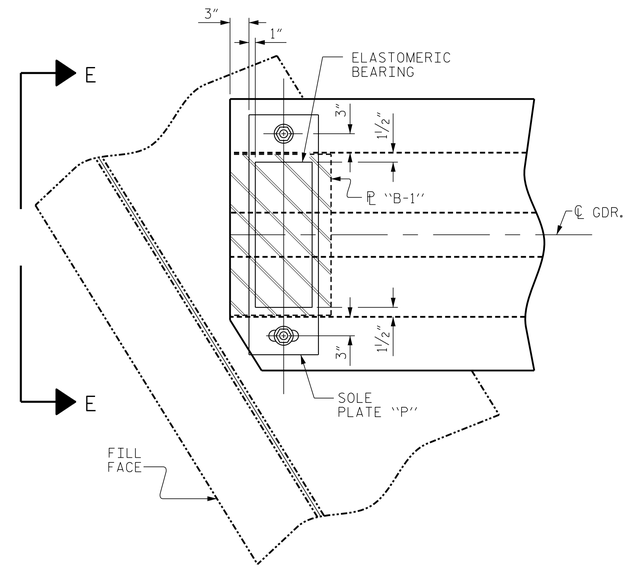

TYPICAL PLAN

(SHOWING SIMPLE SPAN END BENT)

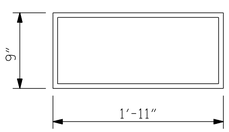

E1 (8 REQ'D)

PLAN VIEW OF ELASTOMERIC BEARING

TYPE V

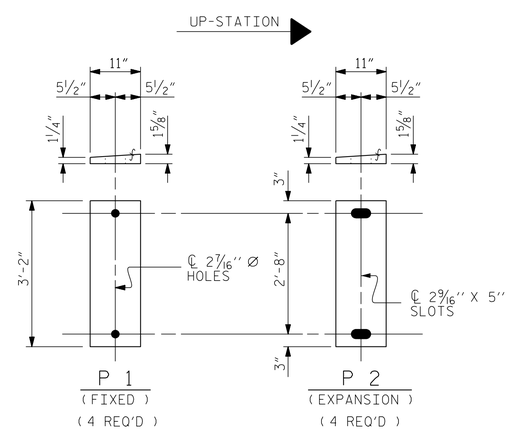

SOLE PLATE DETAILS ("P")

NOTES

AT ALL FIXED POINTS OF SUPPORT, NUTS FOR ANCHOR BOLTS ARE TO BE TIGHTENED FINGER TIGHT AND THEN BACKED OFF 1/2 TURN. THE THREAD OF THE NUT AND BOLT SHALL THEN BE BURRED WITH A SHARP POINTED TOOL.

THE 2"Ø PIPE SLEEVE SHALL BE CUT FROM SCHEDULE 40 PVC PLASTIC PIPE. THE PVC PLASTIC PIPE SHALL MEET THE REQUIREMENTS OF ASTM D1785.

STEEL SOLE PLATES, ANCHOR BOLTS, NUTS, AND WASHERS SHALL BE GALVANIZED IN ACCORDANCE WITH THE STANDARD SPECIFICATIONS.

PRIOR TO WELDING, GRIND THE GALVANIZED SURFACE OF THE PORTION OF THE EMBEDDED PLATE AND SOLE PLATE THAT ARE TO BE WELDED. AFTER WELDING, DAMAGED GALVANIZED SURFACES SHALL BE REPAIRED IN ACCORDANCE WITH THE STANDARD SPECIFICATIONS.

WHEN WELDING THE SOLE PLATE TO THE EMBEDDED PLATE IN THE GIRDER, USE TEMPERATURE INDICATING WAX PENS, OR OTHER SUITABLE MEANS, TO ENSURE THAT THE TEMPERATURE OF THE SOLE PLATE DOES NOT EXCEED 300°F. TEMPERATURES ABOVE THIS MAY DAMAGE THE ELASTOMER.

SOLE PLATE "P", BOLTS, NUTS, WASHERS, AND PIPE SLEEVE SHALL BE INCLUDED IN THE PAY ITEM FOR PRESTRESSED CONCRETE GIRDERS.

ANCHOR BOLTS SHALL MEET THE REQUIREMENTS OF ASTM A449. NUTS SHALL MEET THE REQUIREMENTS OF AASHTO M291-DH OR AASHTO M292-2H. WASHERS SHALL MEET THE REQUIREMENTS OF AASHTO M293. NO SHOP DRAWINGS ARE REQUIRED FOR ANCHOR BOLTS, NUTS AND WASHERS. SHOP INSPECTION IS REQUIRED.

ALL SURFACES OF BEARING PLATES SHALL BE SMOOTH AND STRAIGHT.

THE ELASTOMER IN THE STEEL REINFORCED BEARINGS SHALL HAVE A SHEAR MODULUS OF 0.160 KSI, IN ACCORDANCE WITH AASHTO M251.

FOR STEEL REINFORCED ELASTOMERIC BEARINGS, SEE SPECIAL PROVISIONS.

ALL SOLE PLATES SHALL BE AASHTO M270 GRADE 36.

MAXIMUM ALLOWABLE SERVICE LOADS	
D.L.+L.L. (NO IMPACT)	
TYPE V	365 k

PROJECT NO. R-2582A

NORTHAMPTON COUNTY

STATION: 170+20.99 -L-

ASSEMBLED BY : D. HODGE	DATE : 3/18		
CHECKED BY : B.C. HUNT	DATE : 3/18		
DRAWN BY : EEM 2/97	REV. 6/13	AAC/MAA	
CHECKED BY : VAP 2/97	REV. 1/15	MAA/TMG	
	REV. 12/17	MAA/THC	

DOCUMENT NOT CONSIDERED FINAL UNLESS ALL SIGNATURES COMPLETED

ENGINEER OF RECORD:
Gregory M. Gilland
NORTH CAROLINA PROFESSIONAL SEAL 37400 ENGINEER GREGORY M. GILLAND
9/12/2018

WETHERILL ENGINEERING
1223 Jones Franklin Rd.
Raleigh, N.C. 27606
Bus: 919 851 8077
Fax: 919 851 8107
LICENSE NO. F-0377

STATE OF NORTH CAROLINA
DEPARTMENT OF TRANSPORTATION
RALEIGH

STANDARD
ELASTOMERIC BEARING DETAILS
PRESTRESSED CONCRETE GIRDER SUPERSTRUCTURE (RIGHT LANE)

REVISIONS						SHEET NO.
NO.	BY:	DATE:	NO.	BY:	DATE:	S2-11
1			3			TOTAL SHEETS
2			4			27

STD. NO. EB4 (SHT 1)

P:\2018\18127.02 R-2582A\Structures\Site 1\DGN\STR2_RTLN\R2582A_SMU_ BRG_650127.dgn
9/5/2018 4:39:22 PM

DocuSign Envelope ID: 18ACA90A-401B-4229-8AAF-94D960D4156B

NOTES:

#5 S1 AND S2 BARS MAY BE SHIFTED SLIGHTLY TO MAINTAIN 2"CLEAR TO EXPANSION JOINT IN RAIL.

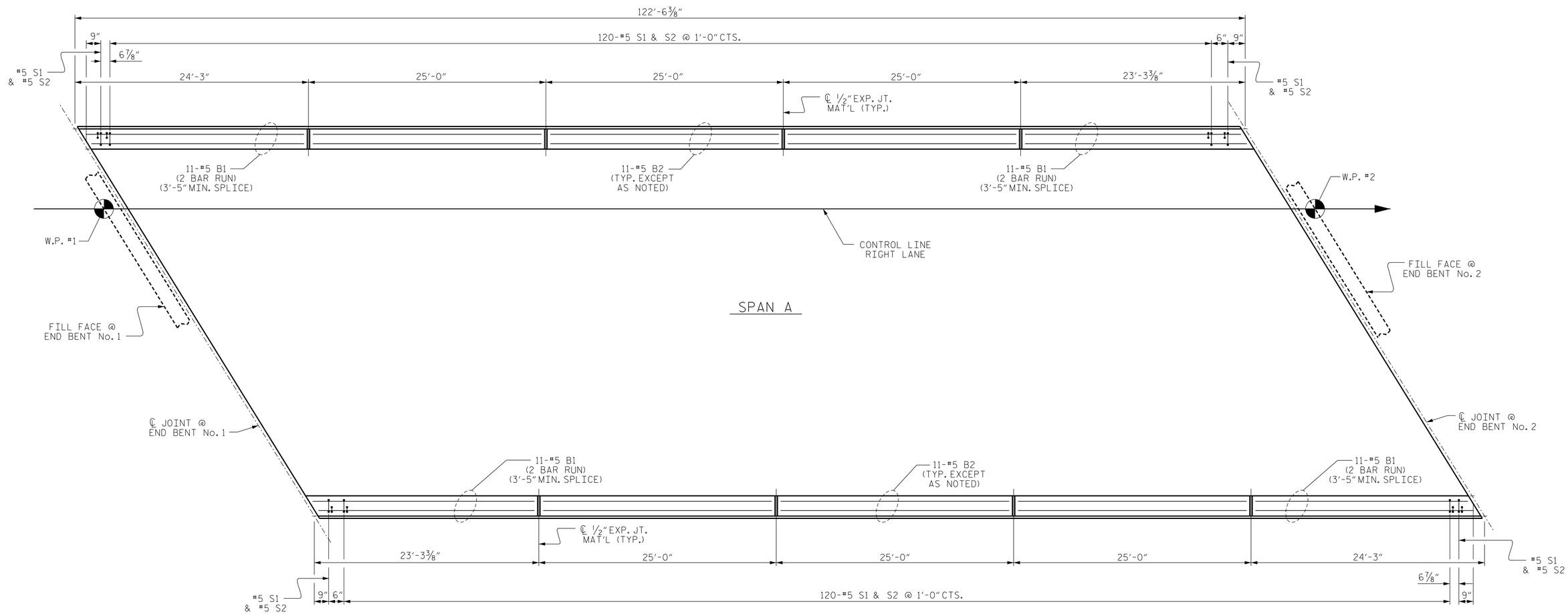

PLAN OF CONCRETE BARRIER RAIL

PROJECT NO. R-2582A

NORTHAMPTON COUNTY

STATION: 170+20.99 -L-

SHEET 1 OF 2

ENGINEER OF RECORD:

Gregory M. Gilland

NORTH CAROLINA PROFESSIONAL SEAL 37400 ENGINEER GREGORY M. GILLAND

9/12/2018

WETHERILL ENGINEERING

1223 Jones Franklin Rd.
Raleigh, N.C. 27606
Bus: 919 851 8077
Fax: 919 851 8107
LICENSE NO. F-0377

STATE OF NORTH CAROLINA
DEPARTMENT OF TRANSPORTATION
RALEIGH

CONCRETE BARRIER RAIL

(RIGHT LANE)

REVISIONS								SHEET NO.
NO.	BY:	DATE:	NO.	BY:	DATE:			S2-12
1			3					TOTAL SHEETS
2			4					27

DOCUMENT NOT CONSIDERED FINAL UNLESS ALL SIGNATURES COMPLETED

DRAWN BY : D. HODGE DATE : 3/18
CHECKED BY : B.C. HUNT DATE : 3/18

P:\2018\18127.02 R-2582A\Structures\Site 1\DGN\STR2_RTLWR2582A_SMU_ CBR_650127.dgn
9/5/2018 4:41:40 PM

DocuSign Envelope ID: 18ACA90A-401B-4229-8AAF-94D960D4156B

NOTES

THE BARRIER RAIL IN EACH SPAN SHALL NOT BE CAST UNTIL ALL SLAB CONCRETE IN THAT SPAN HAS BEEN CAST AND HAS REACHED A MINIMUM COMPRESSIVE STRENGTH OF 3,000 PSI.

ALL REINFORCING STEEL IN BARRIER RAILS SHALL BE EPOXY COATED.

GROOVED CONTRACTION JOINTS, ½" IN DEPTH, SHALL BE TOOLED IN ALL EXPOSED FACES OF THE BARRIER RAIL AND IN ACCORDANCE WITH ARTICLE 825-10(B) OF THE STANDARD SPECIFICATIONS. THE CONTRACTION JOINT SHALL BE LOCATED AT EACH THIRD POINT BETWEEN BARRIER RAIL EXPANSION JOINTS. ONLY ONE CONTRACTION JOINT IS REQUIRED AT MIDPOINT OF BARRIER RAIL SEGMENTS LESS THAN 20 FEET IN LENGTH AND NO CONTRACTION JOINTS ARE REQUIRED FOR THOSE SEGMENTS LESS THAN 10 FEET IN LENGTH.

BAR TYPES

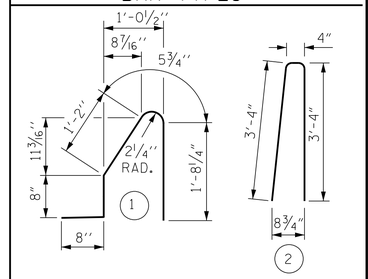

ALL BAR DIMENSIONS ARE OUT TO OUT

BILL OF MATERIAL

FOR CONCRETE BARRIER RAIL ONLY

BAR	NO.	SIZE	TYPE	LENGTH	WEIGHT
* S1	244	#5	1	4'-8"	1188
* S2	244	#5	2	7'-0"	1781
* B1	88	#5	STR	13'-7"	1247
* B2	66	#5	STR	24'-7"	1692

* EPOXY COATED REINFORCING STEEL	5,908 LBS.
CLASS AA CONCRETE	33.3 CU. YDS.
CONCRETE BARRIER RAIL	245.10 LIN. FT.

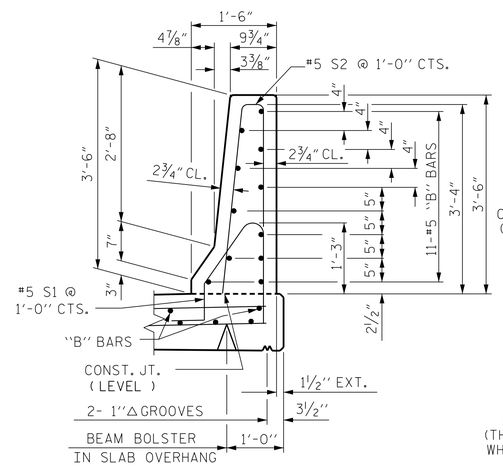

SECTION THRU RAIL

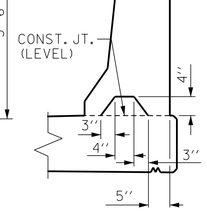

SECTION S-S

AT DAM IN OPEN JOINT (THIS IS TO BE USED ONLY WHEN SLIP FORM IS USED)

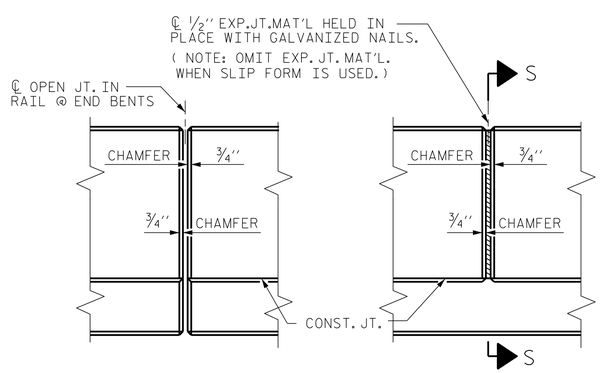

ELEVATION AT EXPANSION JOINTS

BARRIER RAIL DETAILS

PROJECT NO. R-2582A

NORTHAMPTON COUNTY

STATION: 170+20.99 -L-

SHEET 2 OF 2

ENGINEER OF RECORD:

Gregory M. Gilland

NORTH CAROLINA PROFESSIONAL SEAL 37400 ENGINEER GREGORY M. GILLAND

9/12/2018

WETHERILL ENGINEERING

1223 Jones Franklin Rd.
Raleigh, N.C. 27606
Bus: 919 851 8077
Fax: 919 851 8107
LICENSE NO. F-0377

STATE OF NORTH CAROLINA
DEPARTMENT OF TRANSPORTATION
RALEIGH

STANDARD

CONCRETE BARRIER RAIL (RIGHT LANE)

REVISIONS								SHEET NO.
NO.	BY:	DATE:	NO.	BY:	DATE:			S2-13
1			3					TOTAL SHEETS
2			4					27

DOCUMENT NOT CONSIDERED FINAL UNLESS ALL SIGNATURES COMPLETED

ASSEMBLED BY : D. HODGE		DATE :	3/18
CHECKED BY : B.C. HUNT		DATE :	3/18
DRAWN BY : ARB 5/87	REV. 7/12		MAA/GM
CHECKED BY : SJD 9/87	REV. 6/13		MAA/GM
	REV. 12/17		MAA/THC

P:\2018\18127.02_R-2582A\Structures\Site 1\DGN\STR2_RTLN\R2582A_SMU_ CBR_650127.dgn
9/5/2018 4:42:23 PM

STD. NO. CBR1 (SHT 3)

DocuSign Envelope ID: 18ACA90A-401B-4229-8AAF-94D960D4156B

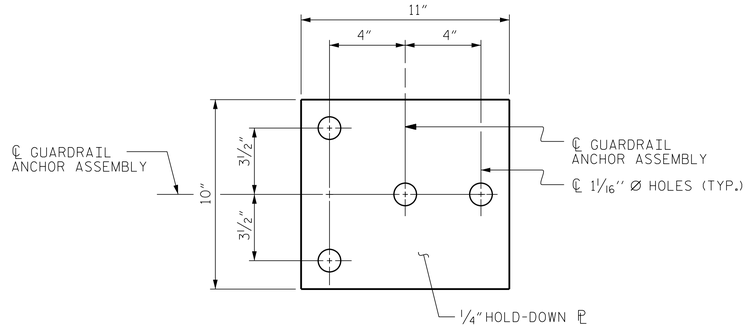

PLAN

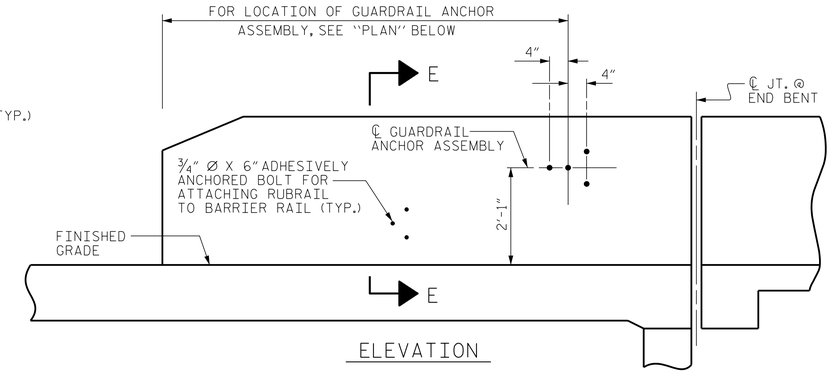

ELEVATION

NOTES

THE GUARDRAIL ANCHOR ASSEMBLY SHALL CONSIST OF A 1/4" HOLD-DOWN PLATE AND 4 - 7/8" Ø BOLTS WITH NUTS AND WASHERS, RUBRAIL, AND ADHESIVELY ANCHORED BOLTS.

THE HOLD-DOWN PLATE SHALL CONFORM TO AASHTO M270 GRADE 36. AFTER FABRICATION, THE HOLD-DOWN PLATE SHALL BE HOT-DIP GALVANIZED IN ACCORDANCE WITH AASHTO M111.

BOLTS SHALL CONFORM TO THE REQUIREMENTS OF ASTM A307 AND NUTS SHALL CONFORM TO THE REQUIREMENTS OF AASHTO M291. BOLTS, NUTS AND WASHERS SHALL BE GALVANIZED. (AT THE CONTRACTOR'S OPTION, STAINLESS STEEL BOLTS, NUTS AND WASHERS MAY BE USED AS AN ALTERNATE FOR THE 7/8" Ø GALVANIZED BOLTS, NUTS AND WASHERS. THEY SHALL CONFORM TO OR EXCEED THE MECHANICAL REQUIREMENTS OF ASTM A307. THE USE OF THIS ALTERNATE SHALL BE APPROVED BY THE ENGINEER.)

THE GUARDRAIL ANCHOR ASSEMBLY IS REQUIRED AT ALL POINTS WHERE APPROACH GUARDRAIL IS TO BE ATTACHED TO THE END OF BARRIER RAIL. FOR POINTS OF ATTACHMENT, SEE SKETCH.

AFTER INSTALLATION, THE EXPOSED THREAD OF THE BOLT SHALL BE BURRED WITH A SHARP POINTED TOOL.

THE COST OF THE GUARDRAIL ANCHOR ASSEMBLY SHALL BE INCLUDED IN THE UNIT CONTRACT PRICE BID FOR CONCRETE BARRIER RAIL.

THE 1 1/4" Ø HOLES SHALL BE FORMED OR DRILLED WITH A CORE BIT. IMPACT TOOLS WILL NOT BE PERMITTED. ANY CONCRETE DAMAGED BY THIS WORK SHALL BE REPAIRED TO THE SATISFACTION OF THE ENGINEER.

THE C6 X 8.2 RUBRAIL IS TO BE ADHESIVELY ANCHORED TO THE RAIL USING THREE 3/4" Ø X 6" BOLTS WITH WASHERS. LEVEL ONE FIELD TESTING IS REQUIRED, AND THE YIELD LOAD OF THE 3/4" Ø BOLT IS 12 KIPS. FOR ADHESIVELY ANCHORED ANCHOR BOLTS OR DOWELS, SEE STANDARD SPECIFICATIONS. SEE ROADWAY STANDARD 862.03 FOR DETAILS AND LOCATION OF THE RUBRAIL.

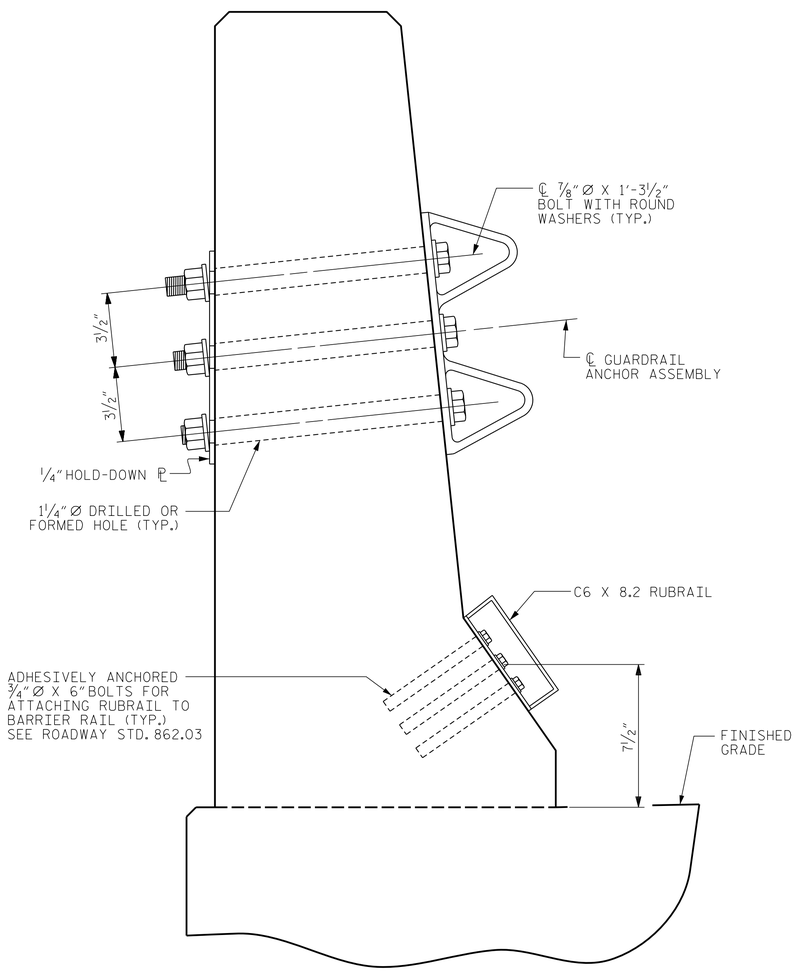

SECTION E-E

GUARDRAIL ANCHOR ASSEMBLY DETAILS

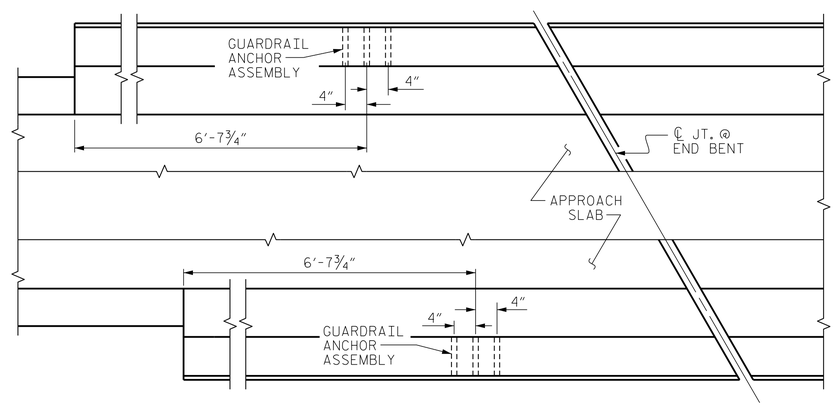

PLAN

LOCATION OF ANCHORS FOR GUARDRAIL

END BENT #1 SHOWN, END BENT #2 SIMILAR.

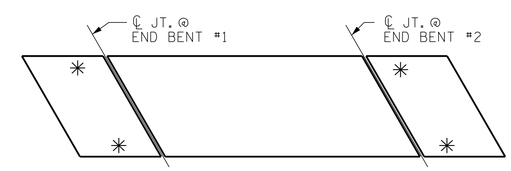

SKETCH SHOWING POINTS OF ATTACHMENTS

✳ DENOTES GUARDRAIL ANCHOR ASSEMBLY

PROJECT NO. R-2582A
NORTHAMPTON COUNTY
STATION: 170+20.99 -L-

ASSEMBLED BY : D. HODGE	DATE : 3/18		
CHECKED BY : B.C. HUNT	DATE : 3/18		
DRAWN BY : TLA 5/06	REV. 7/12	MAA/GM	
CHECKED BY : GM 5/06	REV. 6/13	MAA/GM	
	REV. 12/17	MAA/THC	

DOCUMENT NOT CONSIDERED FINAL UNLESS ALL SIGNATURES COMPLETED

ENGINEER OF RECORD:
Gregory M. Gilland
NORTH CAROLINA PROFESSIONAL SEAL 37400 ENGINEER GREGORY M. GILLAND
9/12/2018

WETHERILL ENGINEERING
1223 Jones Franklin Rd.
Raleigh, N.C. 27606
Bus: 919 851 8077
Fax: 919 851 8107
LICENSE NO. F-0377

STATE OF NORTH CAROLINA
DEPARTMENT OF TRANSPORTATION
RALEIGH

STANDARD
GUARDRAIL ANCHORAGE FOR BARRIER RAIL
(RIGHT LANE)

REVISIONS						SHEET NO.
NO.	BY:	DATE:	NO.	BY:	DATE:	S2-14
1			3			TOTAL SHEETS
2			4			27

(SHT 3a) STD. NO. GRA2

P:\2018\18127.02 R-2582A\Structures\Site 1\DGN\STR2_RTLNR2582A_SMU_GRA_650127.dgn
9/5/2018 5:00:06 PM

DocuSign Envelope ID: 18ACA90A-401B-4229-8AAF-94D960D4156B

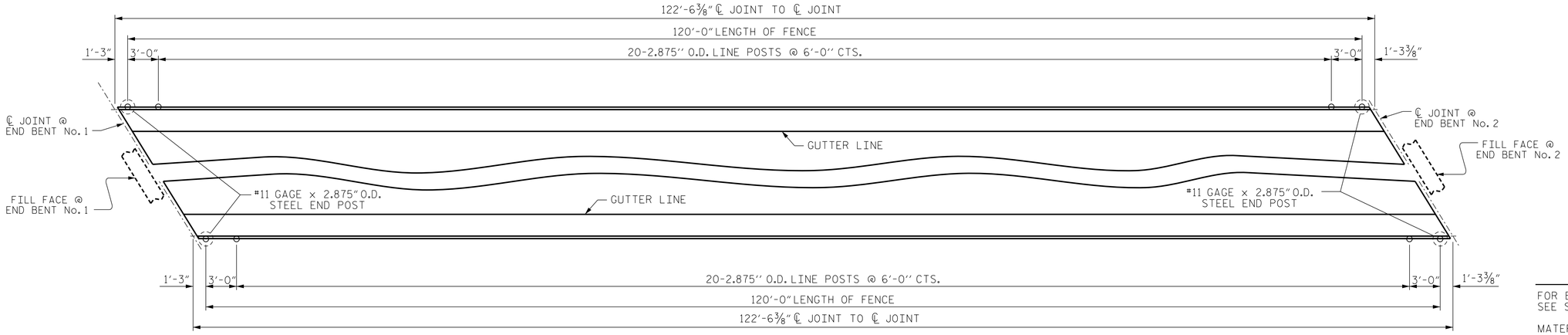

PLAN OF FENCE POST SPACING

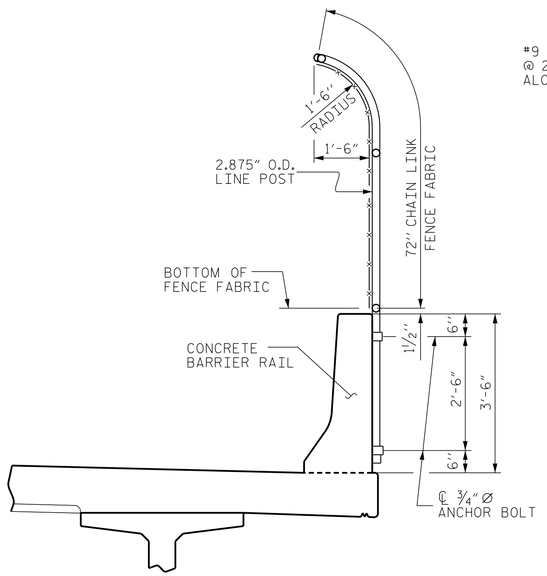

SECTION THRU FENCE

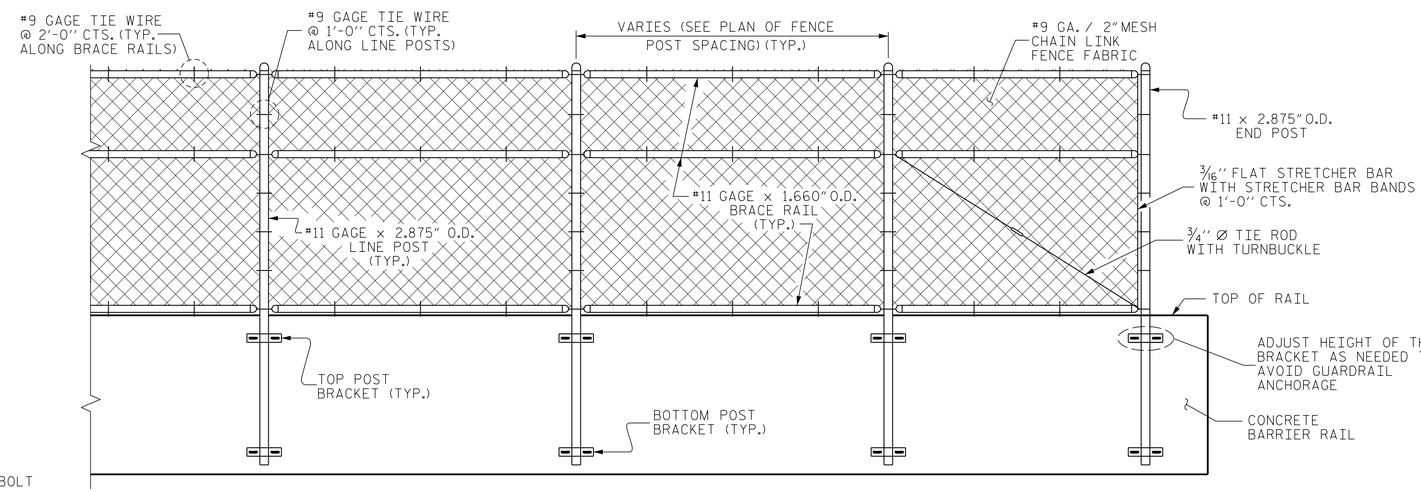

PARTIAL ELEVATION

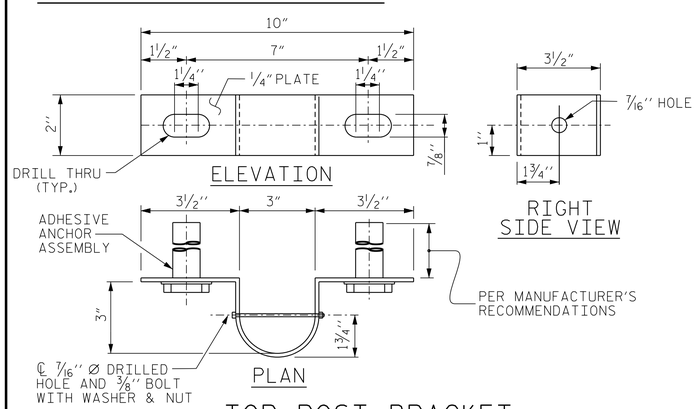

TOP POST BRACKET

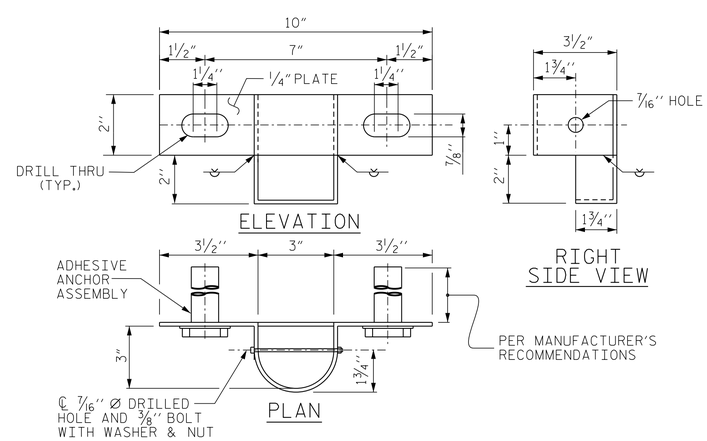

BOTTOM POST BRACKET

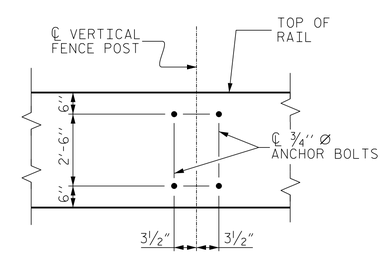

BOLT SETTING DETAIL

NOTES

FOR BRIDGE MOUNTED CHAIN LINK FENCE, SEE SPECIAL PROVISIONS.

MATERIAL FOR ANCHOR BOLTS SHALL BE TYPE 304 STAINLESS STEEL WITH A MINIMUM 9000 PSI ULTIMATE STRENGTH. NUTS AND WASHERS SHALL BE TYPE 304 STAINLESS STEEL. ANCHOR BOLTS SHALL BE EMBEDDED AS PER ADHESIVE BONDING SYSTEM MANUFACTURER SPECIFICATIONS. NUTS SHALL BE AMERICAN STANDARD FINISHED HEXAGON THICK NUTS, CLASS 2B THREADS.

FOR SETTING ANCHOR BOLTS, THE CONTRACTOR SHALL USE AN ADHESIVE BONDING SYSTEM. LEVEL ONE FIELD TESTING OF BONDING SYSTEM IS REQUIRED.

ALL FENCE MATERIAL SHALL MEET THE REQUIREMENTS OF SECTION 1050 OF THE STANDARD SPECIFICATIONS. VINYL COAT ALL STEEL PARTS AND HARDWARE IN ACCORANCE WITH ARTICLE 1050 OF THE STANDARD SPECIFICATIONS.

ALL FENCE COMPONENTS SHALL BE VINYL COATED - BLACK.

FENCE POST LOCATIONS SHALL BE SHIFTED, AS NECESSARY, TO MAINTAIN A 6" MINIMUM DISTANCE FROM ANCHOR BOLT TO JOINTS IN BARRIER RAIL.

WELDING SHALL BE DONE IN ACCORDANCE WITH ARTICLE 1072-20 OF STANDARD SPECIFICATIONS.

ADHESIVE BONDING SYSTEM SHALL HAVE MINIMUM PULLOUT STRENGTH OF 10 KIPS. THE ADHESIVE BONDING SYSTEM SHALL BE CHOSEN FROM THOSE ON THE NCDOT APPROVED PRODUCTS LIST.

72" CHAIN LINK FENCE
TOTAL PAY LENGTH 240.0 LIN. FT.

PROJECT NO. R-2582A
NORTHAMPTON COUNTY
STATION: 170+20.99 -L-

ENGINEER OF RECORD:
Gregory M. Gilland
NORTH CAROLINA PROFESSIONAL SEAL 37400 ENGINEER GREGORY M. GILLAND
9/12/2018

WETHERILL ENGINEERING
1223 Jones Franklin Rd.
Raleigh, N.C. 27606
Bus: 919 851 8077
Fax: 919 851 8107
LICENSE NO. F-0377

STATE OF NORTH CAROLINA
DEPARTMENT OF TRANSPORTATION
RALEIGH

BRIDGE MOUNTED CHAIN LINK FENCE DETAILS

(RIGHT LANE)

REVISIONS						SHEET NO.
NO.	BY:	DATE:	NO.	BY:	DATE:	S2-15
1			3			TOTAL SHEETS
2			4			27

DRAWN BY : D. HODGE DATE : 8/18
CHECKED BY : T. KOCH DATE : 8/18

DOCUMENT NOT CONSIDERED FINAL UNLESS ALL SIGNATURES COMPLETED

P:\2018\18127.02_R-2582A\Structures\Site 1\DGN\STR2_RTLNR2582A_SMU_CLF_650127.dgn
9/5/2018 4:43:38 PM

DocuSign Envelope ID: 18ACA90A-401B-4229-8AAF-94D960D4156B

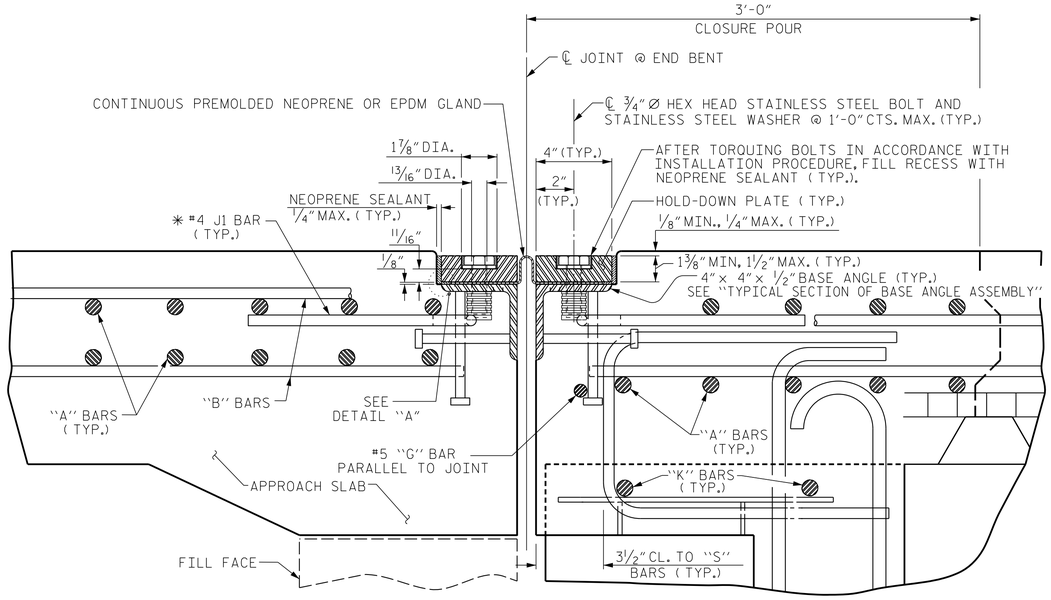

EXPANSION JOINT DETAILS

SECTION NORMAL TO JOINT -- PRESTRESSED GIRDER SUPERSTRUCTURE

✳ THE QUANTITY OF #4 J1 BARS ON THE BILL OF MATERIAL IS BASED ON 1'-0" CENTERS. J1 BARS SHALL BE PLACED AT EACH VERTICAL STUD ANCHOR BOLT. IN THE EVENT THAT THE NUMBER OF VERTICAL STUD ANCHORS EXCEEDS THE NUMBER OF J1 BARS SPECIFIED, ADDITIONAL J1 BARS WILL NOT BE REQUIRED.

INSTALLATION PROCEDURE

1. A TEMPLATE OR OTHER SUITABLE DEVICE SHALL BE USED TO FORM THE TOP OF THE EXPANSION JOINT SEAL BLOCKOUT TO THE PROPER DEPTH AND WIDTH. THE TEMPLATE SHALL BE 4 1/8" TO 4 1/4" WIDE AND OF SUCH THICKNESS AS TO PROVIDE FOR CORRECT FINAL ELEVATION OF TOP OF HOLD-DOWN PLATES. THE TEMPLATE SHALL BE ATTACHED TO THE BASE ANGLE ASSEMBLY WITH THE 3/4" Ø HEX HEAD BOLTS PROVIDED FOR THE HOLD-DOWN PLATES. A 1" Ø HOLE SHALL BE PROVIDED IN THE TEMPLATE CENTERED OVER EACH WEEP HOLE IN THE 4" X 4" X 1/2" BASE ANGLE. OTHER METHODS OF INSURING DRAINAGE THROUGH WEEP HOLES MAY BE EMPLOYED SUBJECT TO ENGINEER'S APPROVAL.
2. AFTER THE CONCRETE HAS BEEN CAST ON BOTH SIDES OF THE JOINT, REMOVE THE TEMPLATE. THOROUGHLY CLEAN THE BOLT HOLES AND THE ANGLE PLATE. REMOVE ANY EXCESS CONCRETE THAT COMES OUT OF THE WEEP HOLES. ANY DAMAGED STEEL SHALL BE REPAIRED IN ACCORDANCE WITH THE SPECIAL PROVISION FOR THERMAL SPRAYED COATINGS (METALLIZATION).
3. LAY THE GLAND ON THE BASE ANGLE AND FIELD MARK THE GLAND FOR THE BOLT HOLES. HOLES IN THE GLAND SHALL BE PUNCHED 7/8" IN DIAMETER WITH A HAND PUNCH.
4. IN ORDER TO CHECK FOR PROPER ALIGNMENT, PLACE THE GLAND AND HOLD-DOWN PLATES ON THE BASE ANGLE. DO NOT APPLY NEOPRENE SEALANT. BOLT THE HOLD-DOWN PLATES TO THE BASE ANGLE BUT DO NOT TIGHTEN. THE ENGINEER SHALL INSPECT THE JOINT SEAL DEVICE FOR PROPER ALIGNMENT.
5. AFTER INSPECTION, REMOVE THE HOLD-DOWN PLATES AND GLAND. APPLY NEOPRENE SEALANT TO THE BASE ANGLE IN ACCORDANCE WITH THE "INSTALLATION SKETCH". PLACE GLAND AND HOLD-DOWN PLATES ON THE BASE ANGLE. BOLT THE HOLD-DOWN PLATES TO THE BASE ANGLE ASSEMBLY AND TORQUE THE BOLTS TO 88 FT-LBS WITH A TORQUE WRENCH. CHECK THE TORQUE AFTER THREE (3) HOURS AND, IF NECESSARY, RETIGHTEN TO 88 FT-LBS. A FINAL CHECK SHALL BE MADE AT SEVEN (7) DAYS. TORQUE SHALL NOT BE LESS THAN 80 FT-LBS AFTER SEVEN (7) DAYS.
6. AFTER PROPER TORQUING, CLEAN THE BOLT HOLE RECESSES, THE RECESS BETWEEN THE JOINT SEAL DEVICE AND CONCRETE, AND THE LIFTING HOLES IN THE HOLD-DOWN PLATE, AND COMPLETELY FILL THE RECESSES AND LIFTING HOLES WITH NEOPRENE SEALANT.

GENERAL NOTES

1. FOR EXPANSION JOINT SEALS, SEE SPECIAL PROVISIONS.
2. ALL PLATES AND ANGLES SHALL CONFORM TO AASHTO M270 GRADE 36 STEEL OR APPROVED EQUAL. ALL HOLD-DOWN BOLTS SHALL CONFORM TO ASTM F593 ALLOY 304 STAINLESS STEEL AND WASHERS SHALL CONFORM TO ASTM F844 EXCEPT THEY SHALL BE MADE FROM ALLOY 304 STAINLESS STEEL. ALL STUD ANCHORS SHALL CONFORM TO AASHTO M169, GRADES 1010 THRU 1020 OR APPROVED EQUAL. ALL CONCRETE INSERTS SHALL BE CLOSED END AND SHALL CONFORM TO AASHTO M169, GRADE 12L14. TENSILE CAPACITY SHALL BE 3000 LBS. MINIMUM.
3. A PREMOLDED CORRUGATED OR NON-CORRUGATED GLAND SHALL BE USED FOR JOINTS SKEWED BETWEEN 50° THRU 130°. FOR JOINTS SKEWED LESS THAN 50° OR MORE THAN 130°, ONLY A CORRUGATED GLAND SHALL BE USED.
4. CLOSED END FERRULES AND STUD ANCHORS SHALL BE SHOP WELDED AND ALL HOLES SHALL BE SHOP DRILLED AS SHOWN ON PLANS. STUD ANCHORS SHALL BE ELECTRIC ARC END WELDED WITH COMPLETE FUSION.
5. SURFACES COMING IN CONTACT WITH NEOPRENE SHALL BE GROUND SMOOTH PRIOR TO METALLIZING.
6. UPON COMPLETION OF SHOP FABRICATION, THE HOLD-DOWN PLATE AND BASE ANGLE ASSEMBLY, AS SHOWN IN THE "TYPICAL SECTION OF BASE ANGLE ASSEMBLY", SHALL BE METALLIZED IN ACCORDANCE WITH THE STANDARD SPECIFICATIONS. FOR THERMAL SPRAYED COATINGS (METALLIZATION), SEE SPECIAL PROVISIONS.
7. THE COVER PLATES SHALL BE GALVANIZED OR METALLIZED IN ACCORDANCE WITH THE STANDARD SPECIFICATIONS. FOR THERMAL SPRAYED COATINGS (METALLIZATION), SEE SPECIAL PROVISIONS.
8. BASE ANGLE ASSEMBLY SHALL BE CONTINUOUS FOR THE LENGTH OF THE JOINT. AT CROWN BREAKS, THE ENDS OF THE BASE ANGLE ASSEMBLY SHALL BE CUT PARALLEL TO THE BRIDGE CENTERLINE FOR SKEWS LESS THAN 80° AND GREATER THAN 100°. FINISHED WELD SHALL BE REPAIRED IN ACCORDANCE WITH THE SPECIAL PROVISION FOR THERMAL SPRAYED COATINGS (METALLIZATION).
9. FIELD SPLICES OF HOLD-DOWN PLATES SHALL BE KEPT TO A MINIMUM. CONTRACTOR SHALL FURNISH DETAILED PLANS SHOWING PROPOSED SPLICE LOCATIONS FOR APPROVAL. HOLD-DOWN PLATES SHALL NOT EXCEED 20' LENGTHS UNLESS APPROVED BY THE ENGINEER.
10. NO ALTERNATE JOINT DETAILS SHALL BE PERMITTED IN LIEU OF THOSE SHOWN ON THESE PLANS.
11. THE CONTRACTOR MAY, AT HIS OPTION, USE ADHESIVELY ANCHORED ANCHOR BOLTS IN PLACE OF CONCRETE INSERTS FOR COVER PLATES. THE YIELD LOAD OF THE 3/4" Ø BOLT IS 10 KIPS. FIELD TESTING OF THE ADHESIVE BONDING SYSTEM IS NOT REQUIRED.
12. THE FABRICATOR SHALL PROVIDE 1/2" Ø THREADED HOLES IN THE HOLD-DOWN PLATES TO ASSIST IN LIFTING AND PLACING. THE HOLES SHALL BE 3/4" DEEP AT 6'-0" MAXIMUM SPACING AND A MINIMUM OF TWO HOLES PER PLATE.

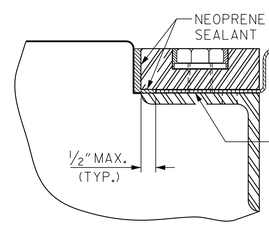

DETAIL "A"

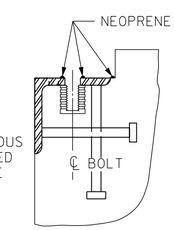

CROSS SECTION

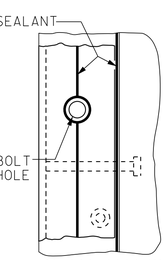

PLAN VIEW

INSTALLATION SKETCH

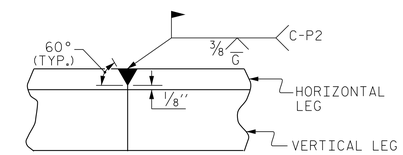

DETAIL- FIELD WELD SPLICE OF BASE ANGLE

MOVEMENT AND SETTING AT JOINT					
END BENT NO.	SKEW ANGLE	TOTAL MOVEMENT (ALONG ℄ RDWY)	PERPENDICULAR JOINT OPENING AT 45° F	PERPENDICULAR JOINT OPENING AT 60° F	PERPENDICULAR JOINT OPENING AT 90° F
1	58°-15'-25"	0	1"	1"	1"
2	58°-15'-25"	3/4"	1 7/16"	1 3/8"	1 1/8"

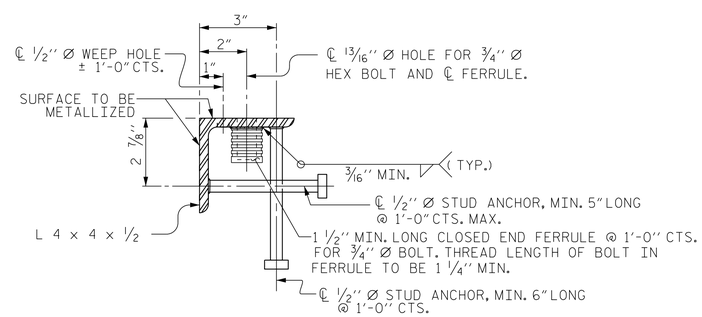

TYPICAL SECTION OF BASE ANGLE ASSEMBLY

PROJECT NO. R-2582A
NORTHAMPTON COUNTY
STATION: 170+20.99 -L-

SHEET 1 OF 2

ENGINEER OF RECORD:
Developed by: Gregory M. Galland
NORTH CAROLINA PROFESSIONAL SEAL 37400 ENGINEER GREGORY M. GALLAND
9/12/2018

WETHERILL ENGINEERING
1223 Jones Franklin Rd.
Raleigh, N.C. 27606
Bus: 919 851 8077
Fax: 919 851 8107
LICENSE NO. F-0377

STATE OF NORTH CAROLINA
DEPARTMENT OF TRANSPORTATION
RALEIGH

STANDARD

EXPANSION JOINT SEAL DETAILS

(RIGHT LANE)

REVISIONS						SHEET NO.
NO.	BY:	DATE:	NO.	BY:	DATE:	S2-16
1			3			TOTAL SHEETS
2			4			27

DOCUMENT NOT CONSIDERED FINAL UNLESS ALL SIGNATURES COMPLETED

ASSEMBLED BY : D. HODGE		DATE : 8/18	
CHECKED BY : T. KOCH		DATE : 8/18	
DRAWN BY : REK 9/87	REV. 10/11/11	MAA/GM	
CHECKED BY : CRK 10/87	REV. 10/17	MAA/THC	
	REV. 6/18	MAA/THC	

P:\2018\18127.02 R-2582A\Structures\Site 1\DGN\STR2_RTLN\R2582A_SMU_ JS_650127.dgn
9/5/2018 5:01:30 PM

STD. NO. EJS1 (SHT 1)

DocuSign Envelope ID: 18ACA90A-401B-4229-8AAF-94D960D4156B

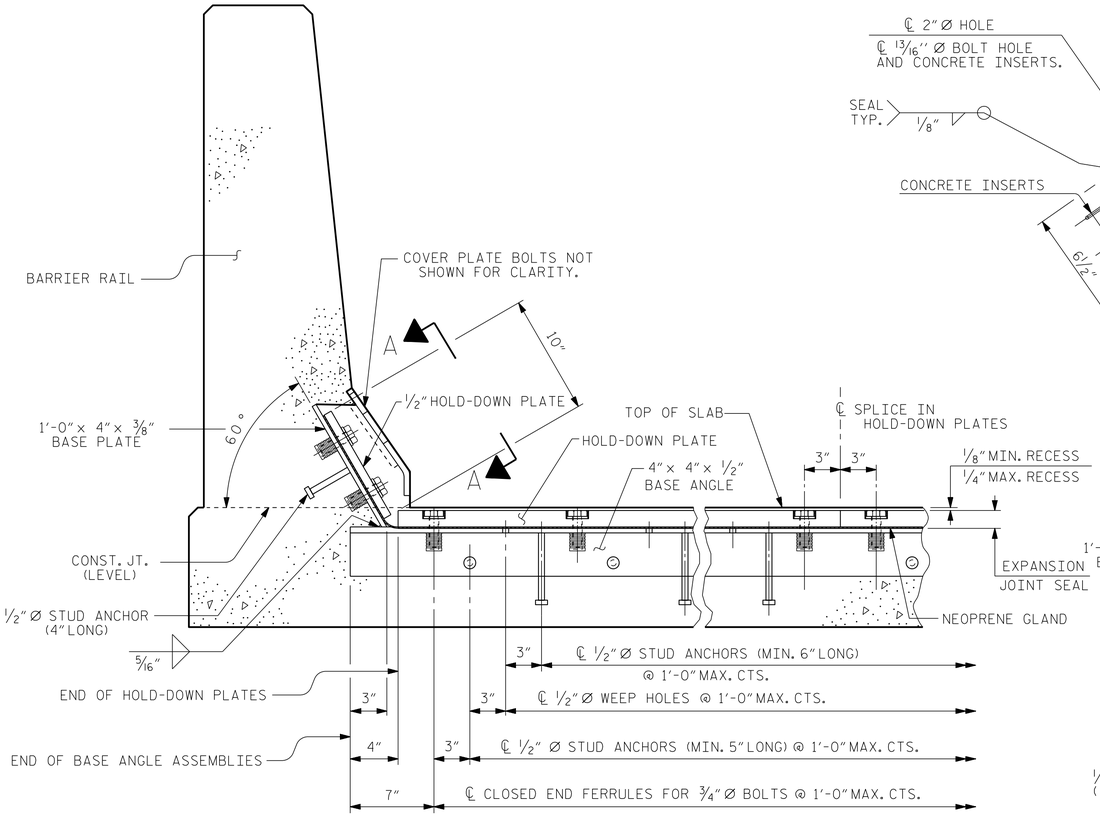

SECTION THRU RAIL NORMAL TO JOINT

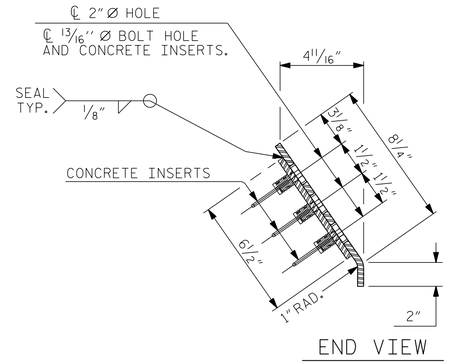

END VIEW

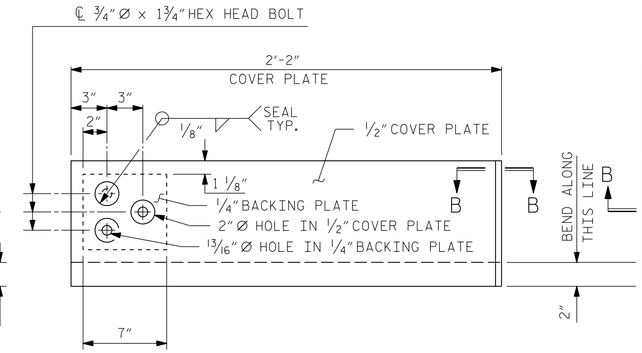

TYPE I - ELEVATION VIEW

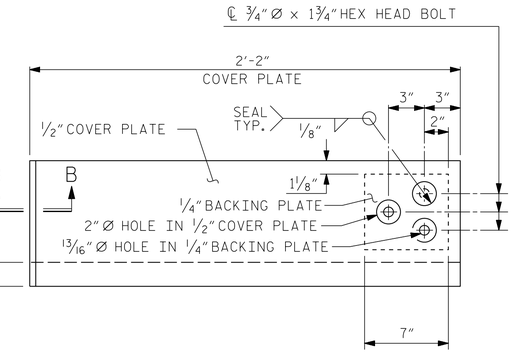

TYPE II - ELEVATION VIEW

COVER PLATE DETAILS

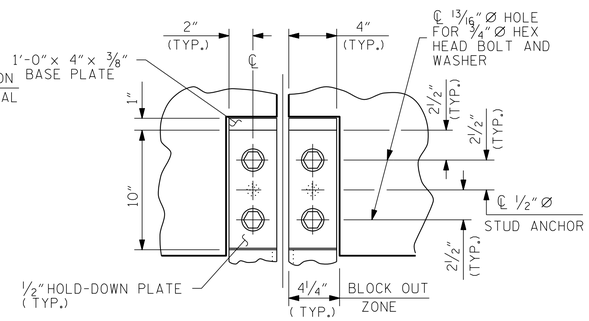

SECTION A - A

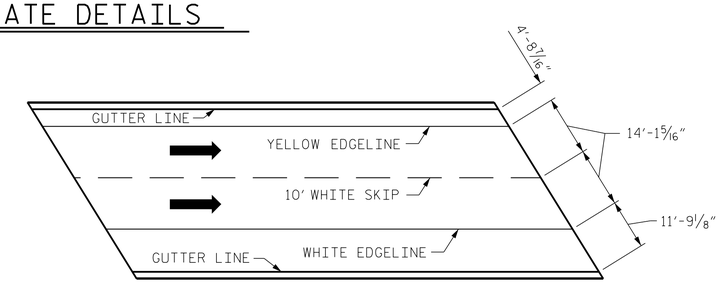

PAVEMENT MARKING ALIGNMENT

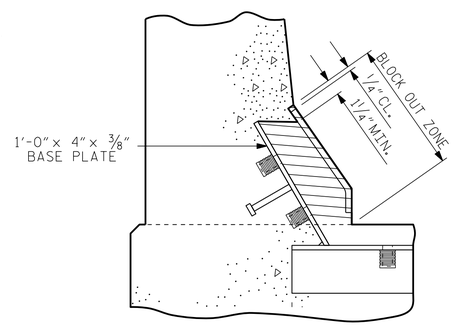

BLOCK OUT DETAIL

SEE "SECTION A - A" FOR OTHER DETAILS.

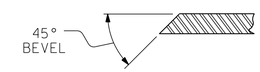

SECTION B - B

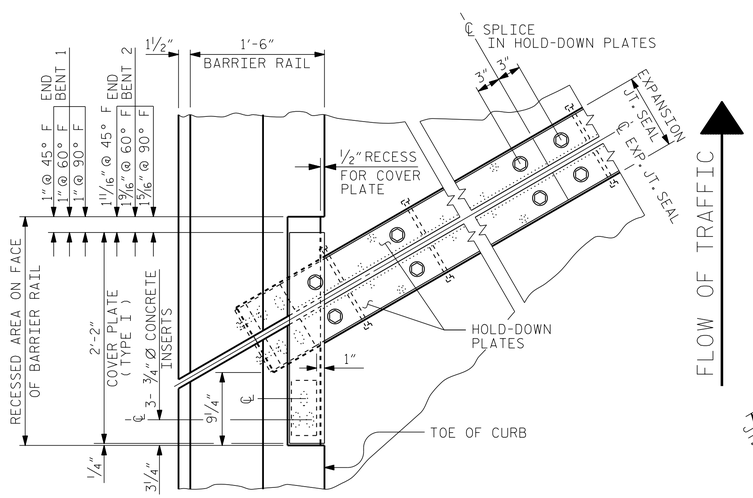

FLOW OF TRAFFIC

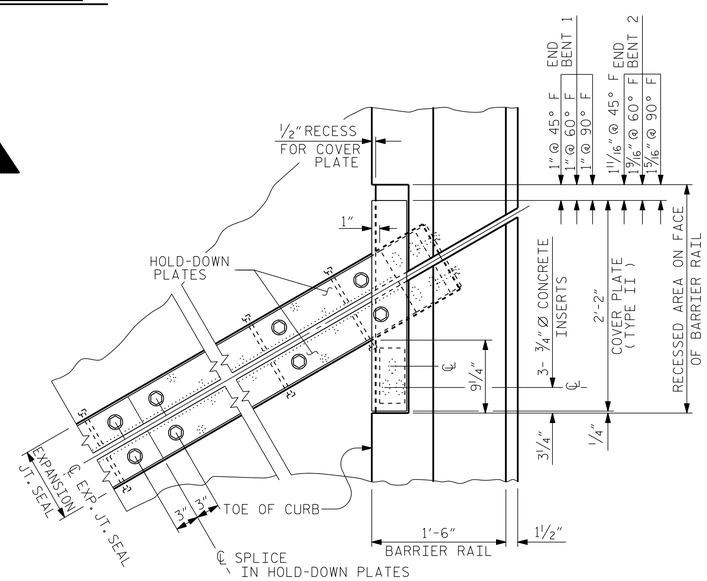

PLAN OF EXPANSION JOINT SEAL

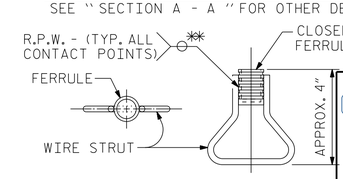

CONCRETE INSERT

** EACH WELDED ATTACHMENT OF WIRE TO FERRULE SHALL DEVELOP THE TENSILE STRENGTH OF THE WIRE.

DOCUMENT NOT CONSIDERED FINAL UNLESS ALL SIGNATURES COMPLETED

PROJECT NO. R-2582A
NORTHAMPTON COUNTY
STATION: 170+20.99 -L-

SHEET 2 OF 2

ENGINEER OF RECORD:
Gregory M. Gilland
NORTH CAROLINA PROFESSIONAL SEAL 37400 ENGINEER GREGORY M. GILLAND
9/12/2018

WETHERILL ENGINEERING
1223 Jones Franklin Rd.
Raleigh, N.C. 27606
Bus: 919 851 8077
Fax: 919 851 8107
LICENSE NO. F-0377

STATE OF NORTH CAROLINA
DEPARTMENT OF TRANSPORTATION
RALEIGH

STANDARD
EXPANSION JOINT SEAL DETAILS FOR BARRIER RAIL
(RIGHT LANE)

REVISIONS						SHEET NO.
NO.	BY:	DATE:	NO.	BY:	DATE:	S2-17
1			3			TOTAL SHEETS
2			4			27

ASSEMBLED BY : D. HODGE		DATE : 8/18	
CHECKED BY : T. KOCH		DATE : 8/18	
DRAWN BY : REK 9/87	REV. 7/12	MAA/GM	
CHECKED BY : CRK 10/87	REV. 6/13	MAA/GM	
	REV. 12/17	MAA/THC	

P:\2018\181127.02 R-2582A\Structures\Site 1\DGN\STR2_RTLNR2582A_SMU_ JS_650127.dgn
9/5/2018 5:02:15 PM

STD. NO. EJS2 SHT 3b

DocuSign Envelope ID: 18ACA90A-401B-4229-8AAF-94D960D4156B

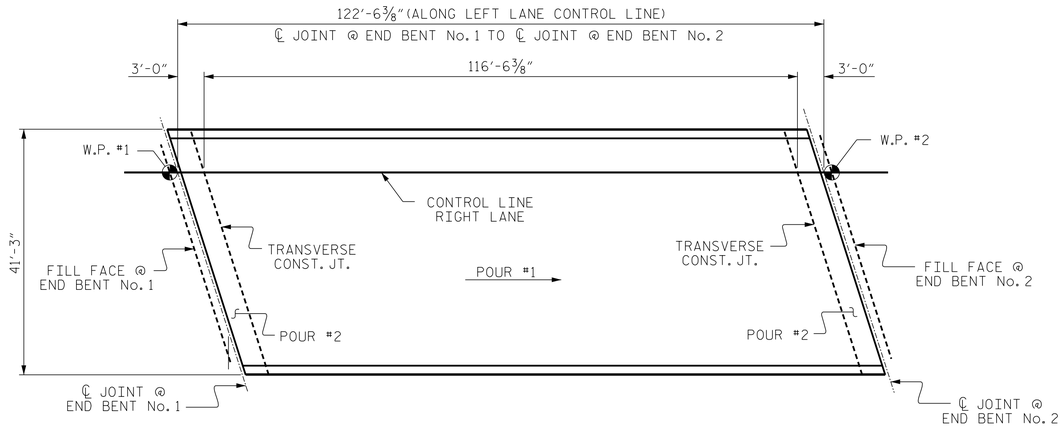

POUR SEQUENCE SKETCH

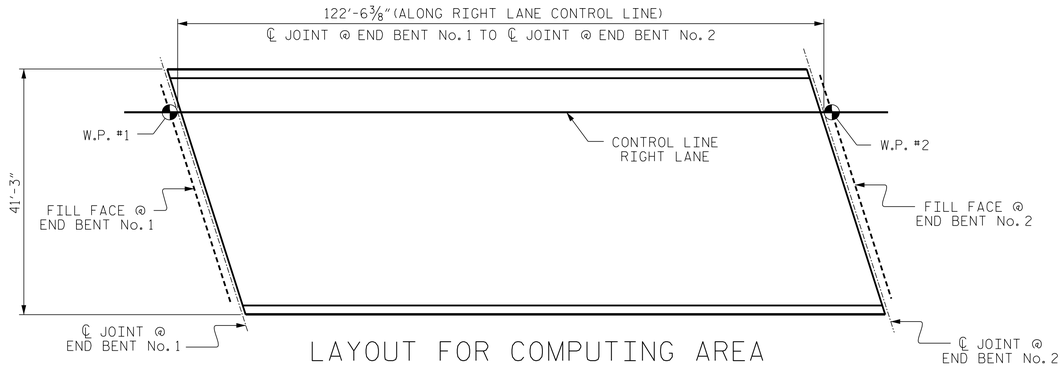

LAYOUT FOR COMPUTING AREA REINFORCED CONCRETE DECK SLAB

(SQ. FT. = 5,054)

BAR TYPES

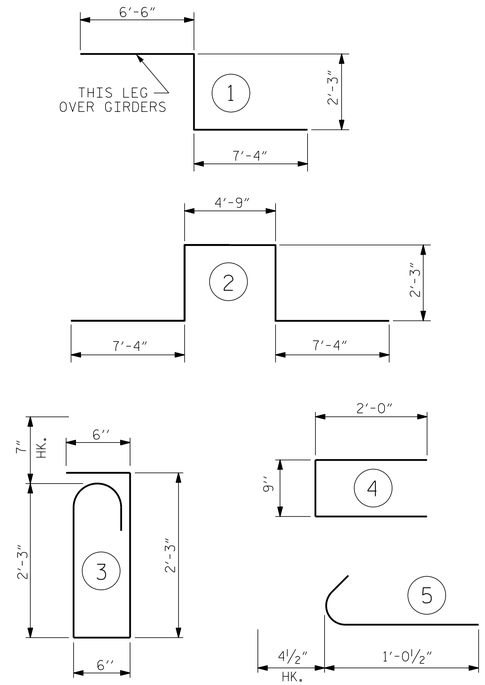

ALL BAR DIMENSIONS ARE OUT TO OUT

SUPERSTRUCTURE BILL OF MATERIAL

	CLASS AA CONCRETE	REINFORCING STEEL	✳EPOXY COATED REINFORCING STEEL
	(CU. YDS.)	(LBS.)	(LBS.)
TOTALS✳✳	170.0	13,660	13,031

✳✳QUANTITIES FOR BARRIER RAIL ARE NOT INCLUDED

BILL OF MATERIAL

BAR	NO.	SIZE	TYPE	LENGTH	WEIGHT
✳ A1	166	#5	STR	40'-11"	7084
A2	166	#5	STR	40'-11"	7084
✳ A3	6	#6	STR	19'-0"	171
✳ A101	6	#5	STR	38'-5"	240
✳ A102	6	#5	STR	35'-8"	223
✳ A103	6	#5	STR	32'-10"	205
✳ A104	6	#5	STR	30'-0"	188
✳ A105	6	#5	STR	27'-2"	170
✳ A106	6	#5	STR	24'-4"	152
✳ A107	6	#5	STR	21'-6"	135
✳ A108	6	#5	STR	18'-8"	117
✳ A109	6	#5	STR	15'-10"	99
✳ A110	6	#5	STR	13'-0"	81
✳ A111	6	#5	STR	10'-2"	64
✳ A112	6	#5	STR	7'-4"	46
✳ A113	6	#5	STR	4'-6"	28

BAR	NO.	SIZE	TYPE	LENGTH	WEIGHT
A201	6	#5	STR	38'-5"	240
A202	6	#5	STR	35'-8"	223
A203	6	#5	STR	32'-10"	205
A204	6	#5	STR	30'-0"	188
A205	6	#5	STR	27'-2"	170
A206	6	#5	STR	24'-4"	152
A207	6	#5	STR	21'-6"	135
A208	6	#5	STR	18'-8"	117
A209	6	#5	STR	15'-10"	99
A210	6	#5	STR	13'-0"	81
A211	6	#5	STR	10'-2"	64
A212	6	#5	STR	7'-4"	46
A213	6	#5	STR	4'-6"	28
✳ B1	145	#4	STR	26'-1"	2526
B2	105	#5	STR	42'-2"	4618
✳ G1	2	#5	STR	48'-1"	100
✳ J1	88	#4	5	1'-5"	83
✳ K1	8	#8	1	16'-5"	351
✳ K2	8	#8	2	23'-11"	511
K3	18	#6	STR	7'-9"	210
✳ S1	48	#4	4	4'-9"	152
✳ S2	48	#5	3	6'-1"	305

REINFORCING STEEL LBS. 13,660

✳ EPOXY COATED REINFORCING STEEL LBS. 13,031

✳ THESE BARS ARE EPOXY COATED.

POUR SEQUENCE BREAKDOWN	
SPAN A	CLASS AA CONCRETE (C.Y.)
POUR #1	142.5
POUR #2	27.5
TOTAL ✳✳	170.0

✳✳QUANTITIES FOR BARRIER RAIL ARE NOT INCLUDED

GROOVING BRIDGE FLOORS		
APPROACH SLABS	1,657	SQ.FT.
BRIDGE DECK	4,234	SQ.FT.
TOTAL	5,891	SQ.FT.

SUPERSTRUCTURE REINFORCING STEEL LENGTHS ARE BASED ON THE FOLLOWING MINIMUM SPLICE LENGTHS					
BAR SIZE	SUPERSTRUCTURE EXCEPT APPROACH SLABS, PARAPET, AND BARRIER RAIL		APPROACH SLABS		PARAPET AND BARRIER RAIL
	EPOXY COATED	UNCOATED	EPOXY COATED	UNCOATED	
#4	2'-0"	1'-9"	2'-0"	1'-9"	2'-9"
#5	2'-6"	2'-2"	2'-6"	2'-2"	3'-5"
#6	3'-0"	2'-7"	3'-10"	2'-7"	4'-4"
#7	5'-3"	3'-6"			
#8	6'-10"	4'-7"			

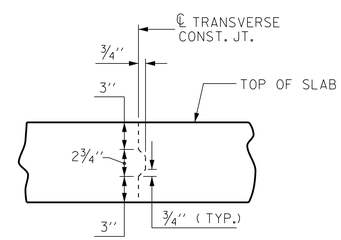

TRANSVERSE CONSTRUCTION JOINT DETAIL

NOTE: REINFORCING STEEL IN SLAB NOT SHOWN. LONGITUDINAL REINFORCING STEEL SHALL BE CONTINUOUS THRU JOINT

PROJECT NO. R-2582A

NORTHAMPTON COUNTY

STATION: 170+20.99 -L-

ENGINEER OF RECORD:

Gregory M. Gilland

NORTH CAROLINA PROFESSIONAL SEAL 37400 ENGINEER GREGORY M. GILLAND

9/12/2018

WETHERILL ENGINEERING

1223 Jones Franklin Rd.
Raleigh, N.C. 27606
Bus: 919 851 8077
Fax: 919 851 8107
LICENSE NO. F-0377

STATE OF NORTH CAROLINA
DEPARTMENT OF TRANSPORTATION
RALEIGH

SUPERSTRUCTURE
BILL OF MATERIAL
(RIGHT LANE)

REVISIONS							
NO.	BY:	DATE:	NO.	BY:	DATE:		
1			3				
2			4				

SHEET NO. S2-18

TOTAL SHEETS 27

DRAWN BY : D. HODGE DATE : 3/18

CHECKED BY : B.C. HUNT DATE : 3/18

DOCUMENT NOT CONSIDERED FINAL UNLESS ALL SIGNATURES COMPLETED

P:\2018\18127.02 R-2582A\Structures\Site 1\DGN\STR2_RTLN\R2582A_SMU_ BM_650127.dgn
9/5/2018 4:37:06 PM

DocuSign Envelope ID: 18ACA90A-401B-4229-8AAF-94D960D4156B

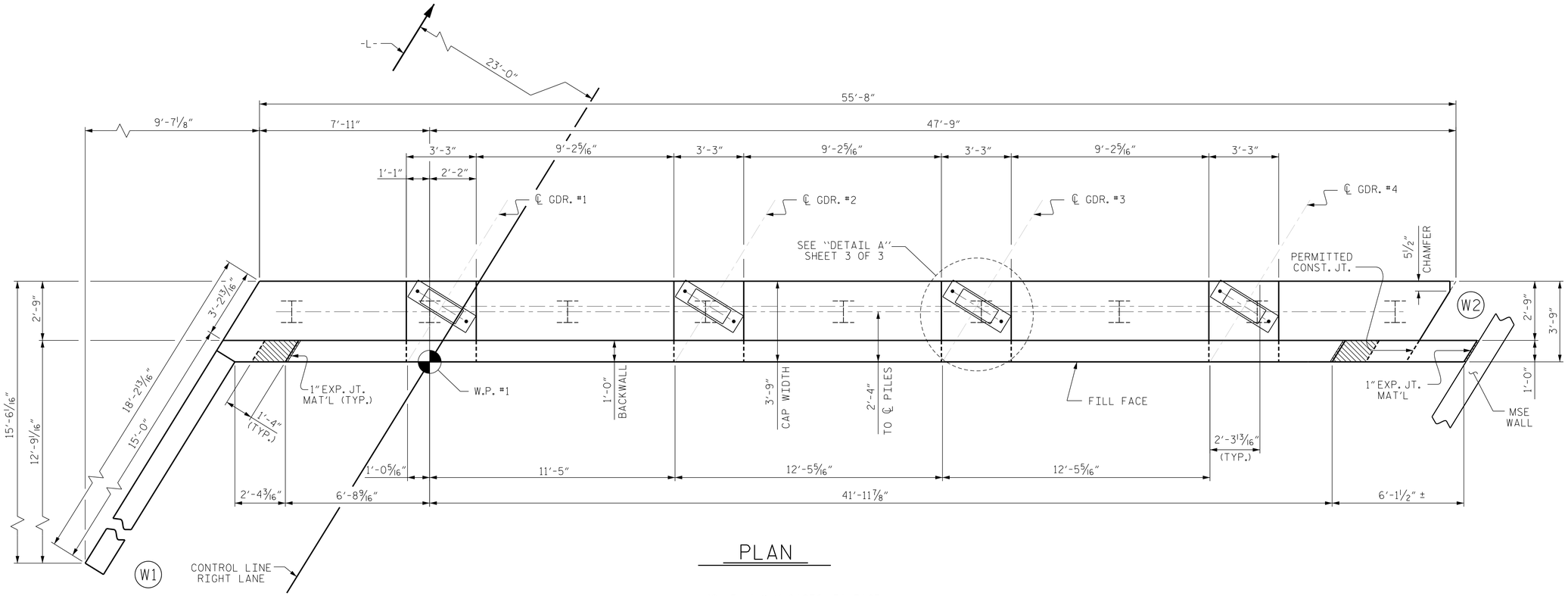

PLAN

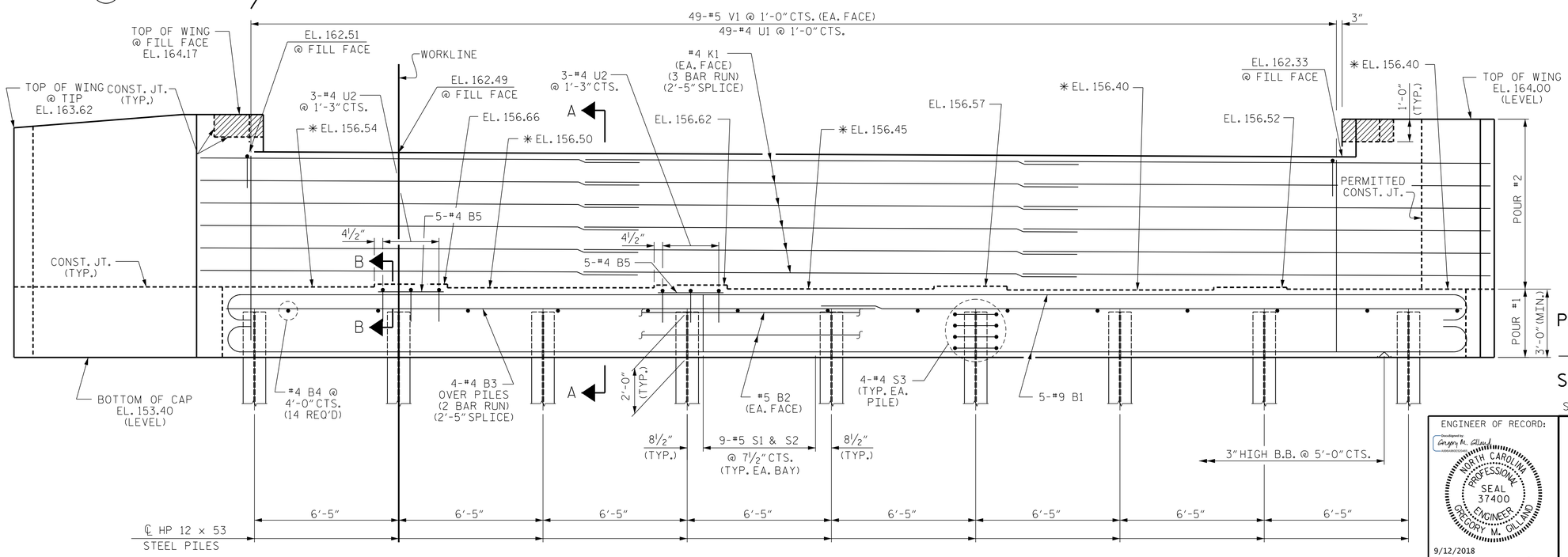

ELEVATION

✳ FOR LOCATION OF ELEVATIONS BETWEEN BRIDGE SEAT BUILD-UPS. SEE SECTION A-A, SHEET 3 OF 3.

PROJECT NO. R-2582A
NORTHAMPTON COUNTY
STATION: 170+20.99 -L-

SHEET 1 OF 3

ENGINEER OF RECORD:
Gregory M. Gilland
NORTH CAROLINA PROFESSIONAL SEAL 37400 ENGINEER GREGORY M. GILLAND
9/12/2018

WETHERILL ENGINEERING
1223 Jones Franklin Rd.
Raleigh, N.C. 27606
Bus: 919 851 8077
Fax: 919 851 8107
LICENSE NO. F-0377

STATE OF NORTH CAROLINA
DEPARTMENT OF TRANSPORTATION
RALEIGH

SUBSTRUCTURE
END BENT No. 1
RIGHT LANE

REVISIONS						SHEET NO.
NO.	BY:	DATE:	NO.	BY:	DATE:	S2-19
1			3			TOTAL SHEETS
2			4			27

DRAWN BY : D. HODGE DATE : 5/18
CHECKED BY : G.M. GILLAND DATE : 5/18

DOCUMENT NOT CONSIDERED FINAL UNLESS ALL SIGNATURES COMPLETED

P:\2018\18127.02 R-2582A\Structures\Site 1\DGN\STR2_RTLNR2582A_SMU_ EBT_650127.dgn
9/5/2018 4:47:15 PM

DocuSign Envelope ID: 18ACA90A-401B-4229-8AAF-94D960D4156B

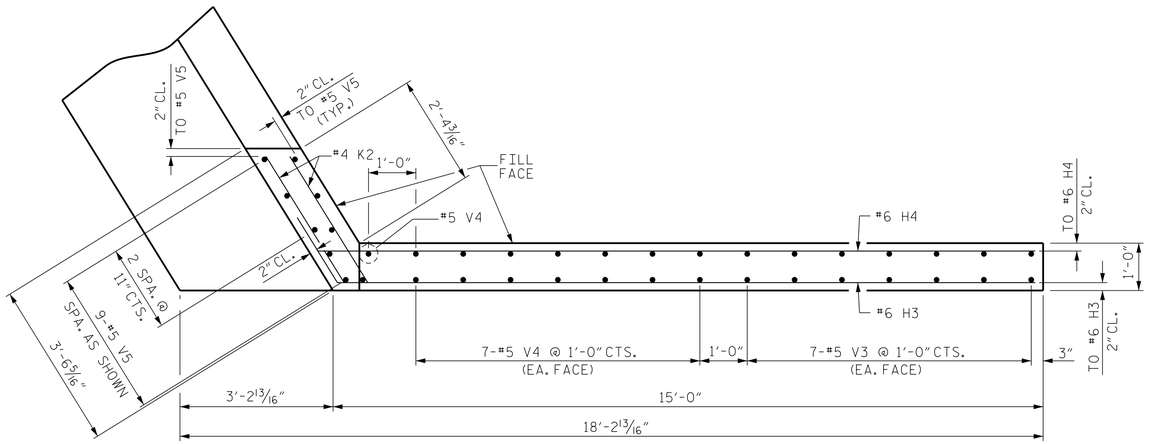

PLAN OF WING - (W1)

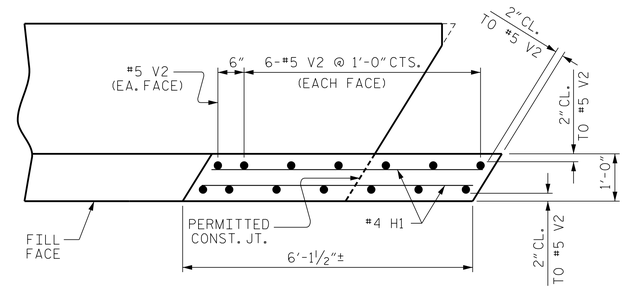

PLAN OF WING - (W2)

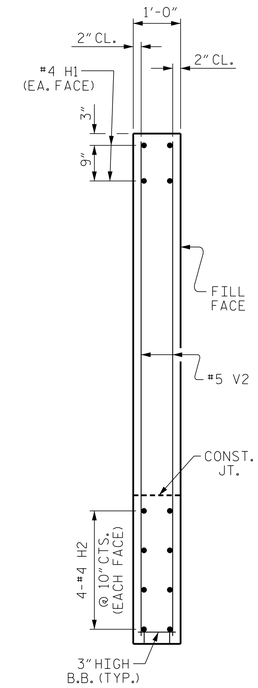

SECTION X-X

(K1 BARS NOT SHOWN)

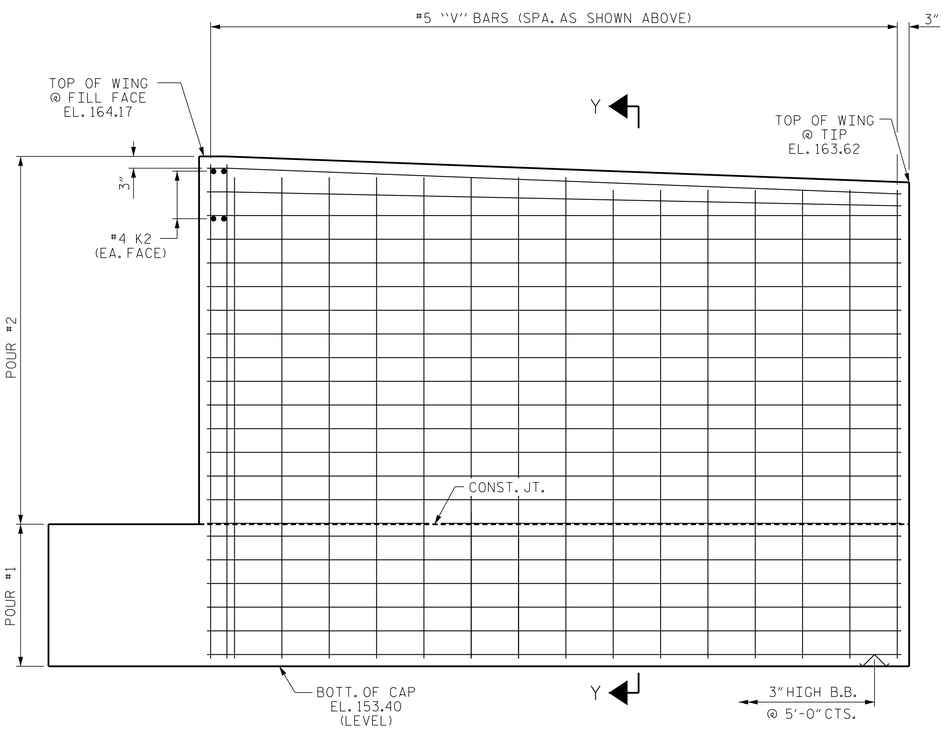

ELEVATION OF WING - (W1)

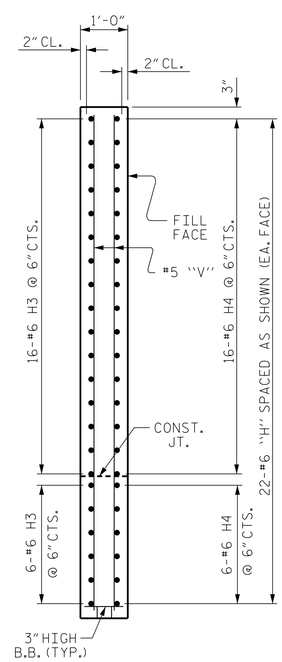

SECTION Y-Y

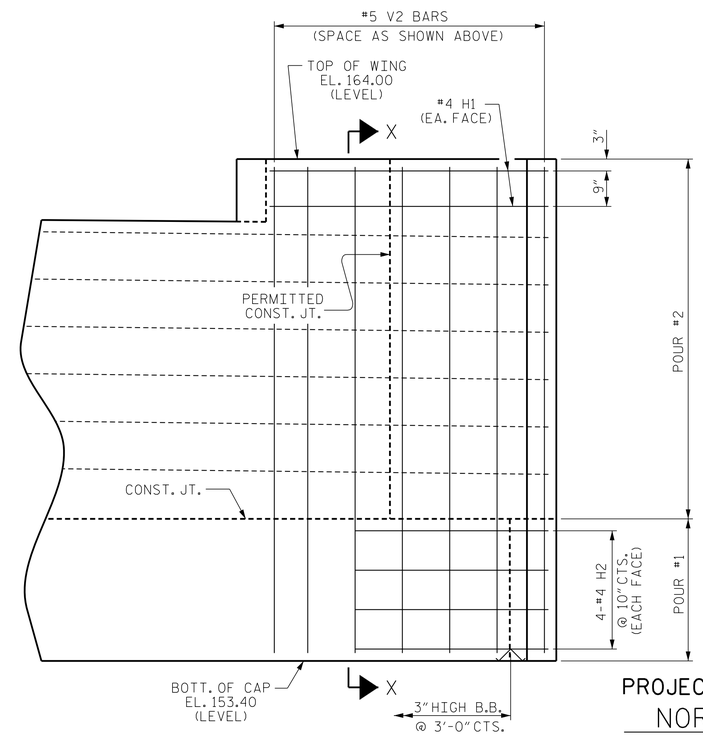

ELEVATION OF WING - (W2)

PROJECT NO. R-2582A

NORTHAMPTON COUNTY

STATION: 170+20.99 -L-

SHEET 2 OF 3

ENGINEER OF RECORD:

Gregory M. Gilland

NORTH CAROLINA PROFESSIONAL SEAL 37400 ENGINEER GREGORY M. GILLAND

9/12/2018

WETHERILL ENGINEERING

1223 Jones Franklin Rd.
Raleigh, N.C. 27606
Bus: 919 851 8077
Fax: 919 851 8107
LICENSE NO. F-0377

STATE OF NORTH CAROLINA
DEPARTMENT OF TRANSPORTATION
RALEIGH

SUBSTRUCTURE

END BENT No. 1

RIGHT LANE

REVISIONS						SHEET NO.
NO.	BY:	DATE:	NO.	BY:	DATE:	S2-20
1			3			TOTAL SHEETS
2			4			27

DOCUMENT NOT CONSIDERED FINAL UNLESS ALL SIGNATURES COMPLETED

DRAWN BY :	D. HODGE	DATE :	5/18
CHECKED BY :	G.M. GILLAND	DATE :	5/18

P:\2018\18127.02 R-2582A\Structures\Site 1\DGN\STR2_RTLNR2582A_SMU_ EBT_650127.dgn
9/5/2018 4:49:26 PM

DocuSign Envelope ID: C819CF5D-9855-4109-969A-0FA2D650F43E

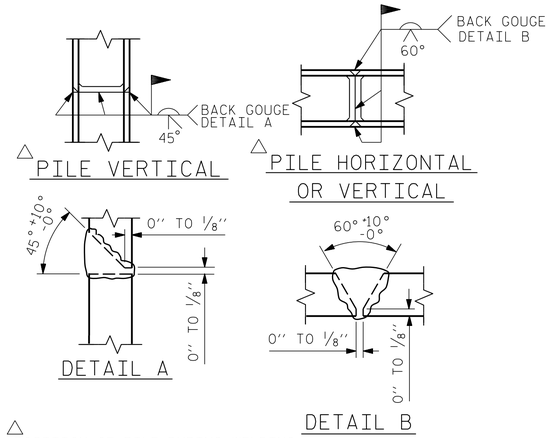

△ POSITION OF PILE DURING WELDING.

PILE SPLICE DETAILS

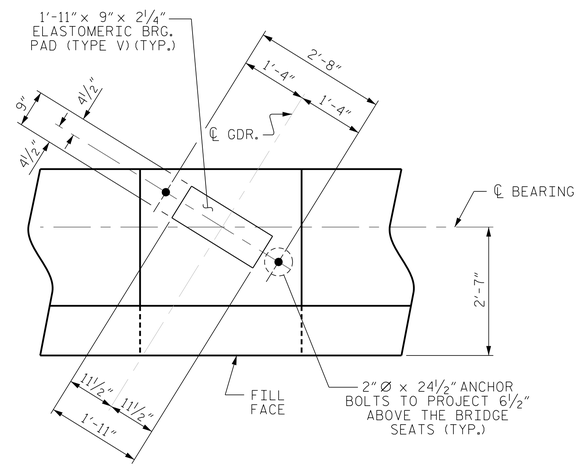

DETAIL "A"
(TYP. EA. GIRDER)

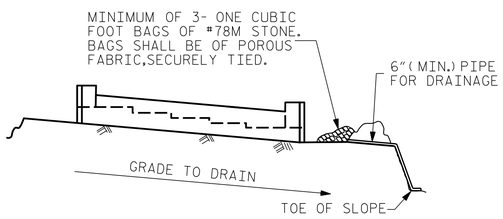

BAGGED STONE AND PIPE SHALL BE PLACED IMMEDIATELY AFTER COMPLETION OF END BENT EXCAVATION. PIPE MAY BE EITHER CONCRETE, CORRUGATED STEEL, CORRUGATED ALUMINUM ALLOY, OR CORRUGATED PLASTIC. PERFORATED PIPE WILL NOT BE ALLOWED.

BAGGED STONE SHALL REMAIN IN PLACE UNTIL THE ENGINEER DIRECTS THAT IT BE REMOVED. THE CONTRACTOR SHALL REMOVE AND DISPOSE OF SILT ACCUMULATIONS AT BAGGED STONE WHEN SO DIRECTED BY THE ENGINEER. BAGS SHALL BE REMOVED AND REPLACED WHENEVER THE ENGINEER DETERMINES THAT THEY HAVE DETERIORATED AND LOST THEIR EFFECTIVENESS.

NO SEPARATE PAYMENT WILL BE MADE FOR THIS WORK AND THE ENTIRE COST OF THIS WORK SHALL BE INCLUDED IN THE UNIT CONTRACT PRICE BID FOR THE SEVERAL PAY ITEMS.

TEMPORARY DRAINAGE AT END BENT

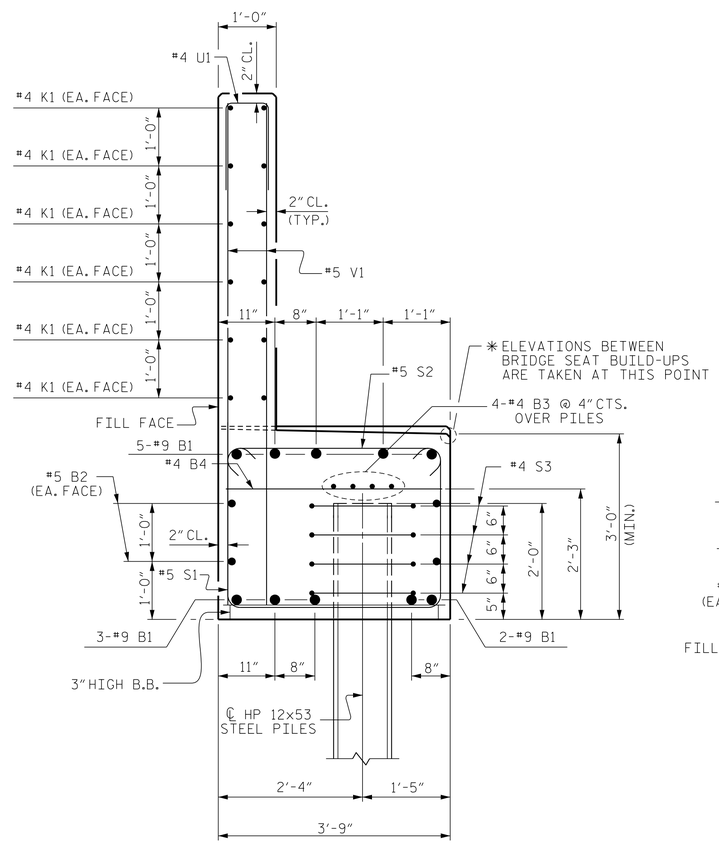

SECTION A-A

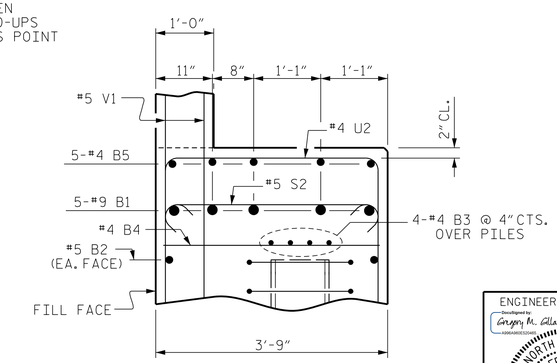

SECTION B-B

BAR TYPES

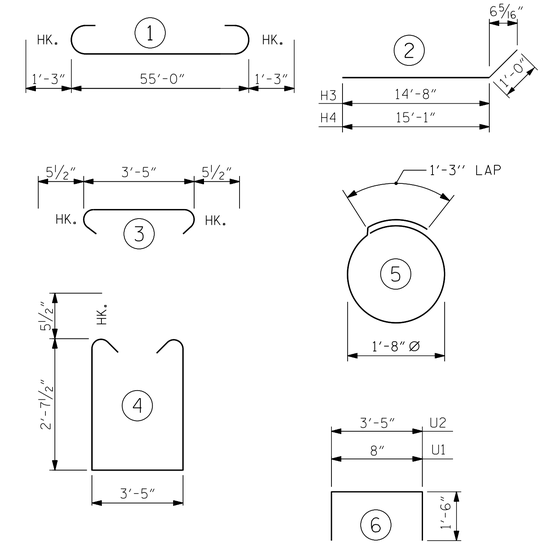

ALL BAR DIMENSIONS ARE OUT TO OUT.

NOTES

STIRRUPS IN CAP MAY BE SHIFTED AS NECESSARY TO CLEAR ANCHOR BOLTS.

BACKWALL SHALL BE PLACED BEFORE APPLYING THE EPOXY PROTECTIVE COATING.

THE TOP SURFACE AREAS OF THE END BENT CAP SHALL BE CURED IN ACCORDANCE WITH THE STANDARD SPECIFICATIONS EXCEPT THE MEMBRANE CURING COMPOUND METHOD SHALL NOT BE USED.

THE TOP SURFACE OF THE END BENT CAP EXCEPT THE BRIDGE SEAT BUILDUPS SHALL BE SLOPED TRANSVERSELY FROM THE FILL FACE TO THE BACK FACE AT THE RATE OF 2%.

THE CONCRETE IN THE SHADED AREA OF THE WING SHALL BE POURED AFTER THE BARRIER RAILS ARE CAST IF SLIP FORMING IS USED.

BILL OF MATERIAL

END BENT No. 1

BAR	NO.	SIZE	TYPE	LENGTH	WEIGHT
B1	10	#9	1	57'-6"	1955
B2	4	#5	STR	55'-3"	231
B3	8	#4	STR	28'-11"	155
B4	14	#4	STR	3'-5"	32
B5	10	#4	STR	2'-11"	19
H1	4	#4	STR	5'-8"	15
H2	8	#4	STR	4'-2"	22
H3	22	#6	2	15'-8"	518
H4	22	#6	2	16'-1"	531
K1	36	#4	STR	21'-0"	505
K2	4	#4	STR	3'-1"	8
S1	72	#5	4	9'-7"	720
S2	72	#5	3	4'-4"	325
S3	36	#4	5	6'-6"	156
U1	49	#4	6	3'-8"	120
U2	6	#4	6	6'-5"	26
V1	98	#5	STR	8'-7"	877
V2	14	#5	STR	10'-3"	150
V3	14	#5	STR	9'-10"	144
V4	15	#5	STR	10'-2"	159
V5	9	#5	STR	10'-5"	98
REINFORCING STEEL					6,766 LBS.

CLASS A CONCRETE BREAKDOWN

POUR #1	CAP AND LOWER PART OF WINGS	25.9 C.Y.
POUR #2	BACKWALL AND UPPER PART OF WINGS	17.6 C.Y.
TOTAL CLASS A CONCRETE		43.5 C.Y.

HP 12 X 53 STEEL PILES
NO: 9 — 855 L.F.

PILE DRIVING EQUIPMENT SETUP FOR HP 12 X 53 STEEL PILES — 9 EA.

PILE REDRIVES — 5 EA.

PROJECT NO. R-2582A
NORTHAMPTON COUNTY
STATION: 170+20.99 -L-

SHEET 3 OF 3

ENGINEER OF RECORD:
Gregory M. Gilland
NORTH CAROLINA PROFESSIONAL SEAL 37400 ENGINEER GREGORY M. GILLAND
9/25/2018

WETHERILL ENGINEERING
1223 Jones Franklin Rd.
Raleigh, N.C. 27606
Bus: 919 851 8077
Fax: 919 851 8107
LICENSE NO. F-0377

STATE OF NORTH CAROLINA
DEPARTMENT OF TRANSPORTATION
RALEIGH

SUBSTRUCTURE
END BENT No. 1
RIGHT LANE

REVISIONS						SHEET NO.
NO.	BY:	DATE:	NO.	BY:	DATE:	S2-21
1			3			TOTAL SHEETS
2			4			27

DOCUMENT NOT CONSIDERED FINAL UNLESS ALL SIGNATURES COMPLETED

DRAWN BY : D. HODGE DATE : 5/18
CHECKED BY : G.M. GILLAND DATE : 5/18

P:\2018\18127.02 R-2582A\Structures\Site 1\DGN\STR2_RTLN\R2582A_SMU_ EBT_650127.dgn
9/24/2018 3:32:10 PM

DocuSign Envelope ID: 18ACA90A-401B-4229-8AAF-94D960D4156B

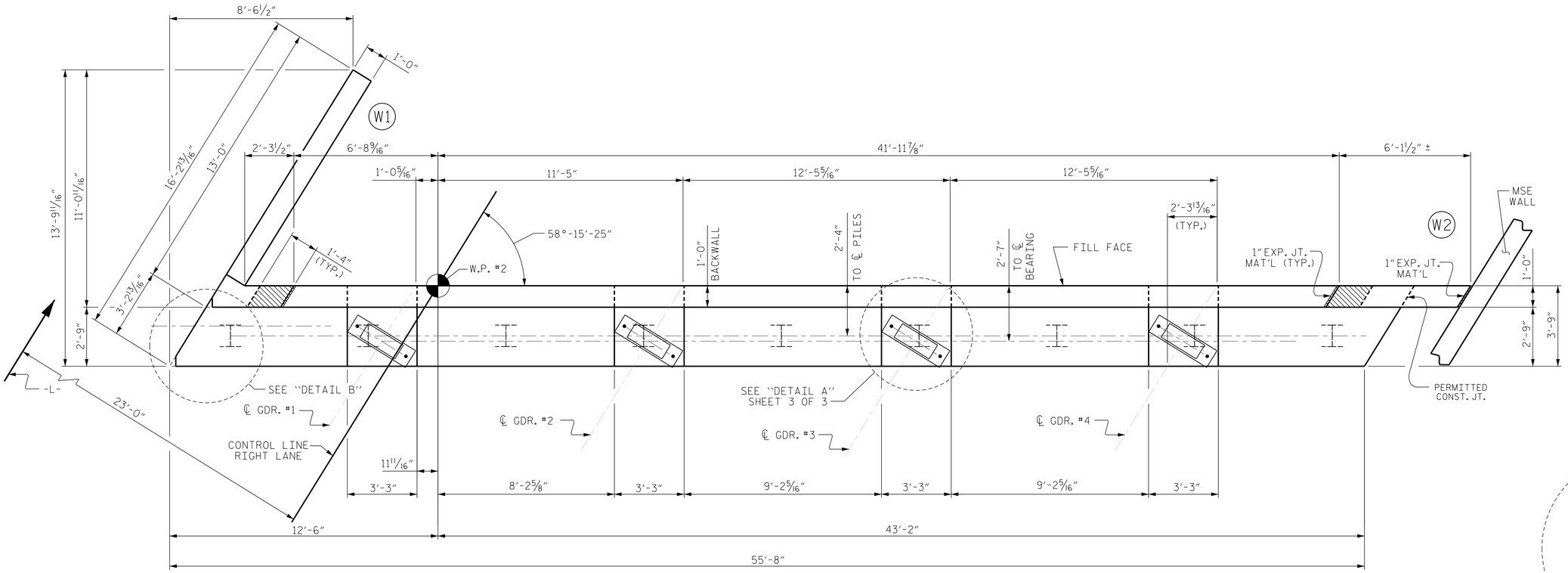

PLAN

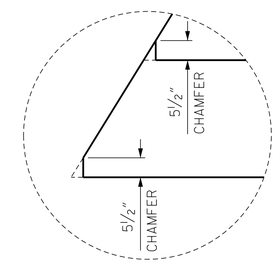

DETAIL "B"

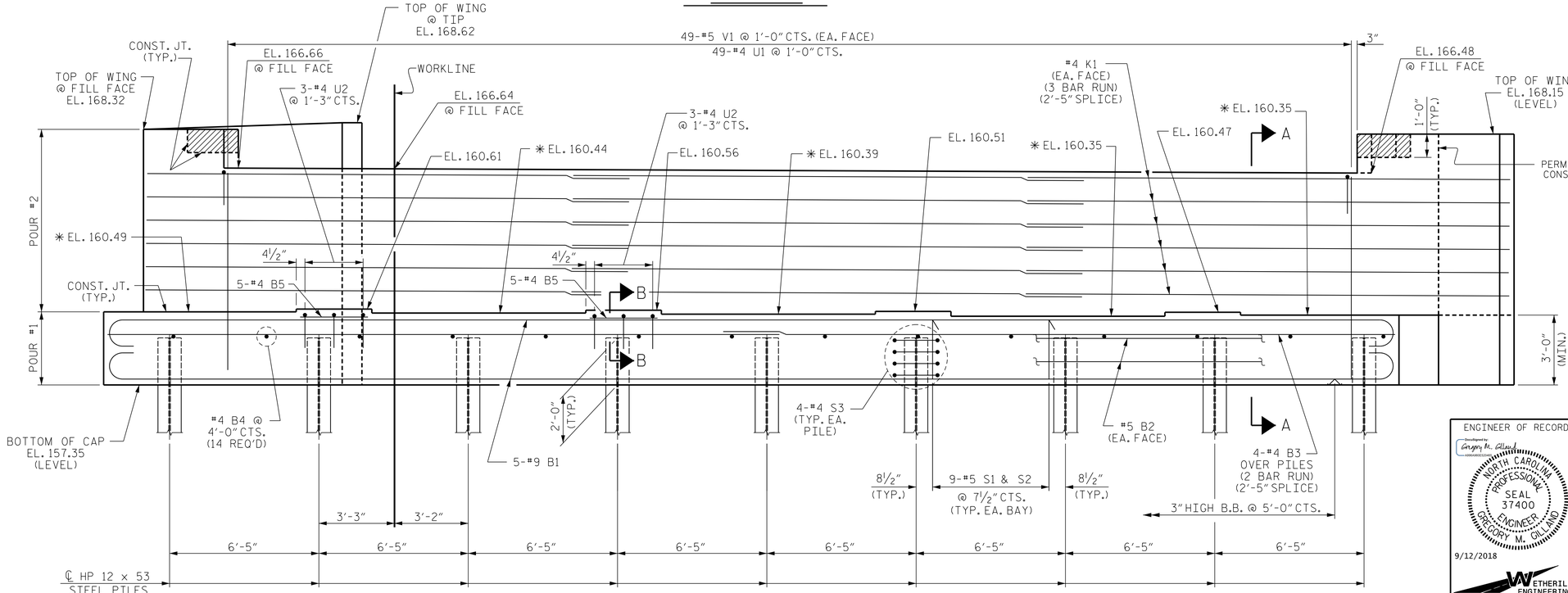

ELEVATION

✱ FOR LOCATION OF ELEVATIONS BETWEEN BRIDGE SEAT BUILD-UPS. SEE SECTION A-A, SHEET 3 OF 3.

PROJECT NO. R-2582A

NORTHAMPTON COUNTY

STATION: 170+20.99 -L-

SHEET 1 OF 3

ENGINEER OF RECORD:

Developed by: Gregory M. Gilland

NORTH CAROLINA PROFESSIONAL SEAL 37400 ENGINEER GREGORY M. GILLAND

9/12/2018

WETHERILL ENGINEERING

1223 Jones Franklin Rd.
Raleigh, N.C. 27606
Bus: 919 851 8077
Fax: 919 851 8107
LICENSE NO. F-0377

STATE OF NORTH CAROLINA
DEPARTMENT OF TRANSPORTATION
RALEIGH

SUBSTRUCTURE

END BENT No. 2

RIGHT LANE

REVISIONS						SHEET NO.
NO.	BY:	DATE:	NO.	BY:	DATE:	S2-22
1			3			TOTAL SHEETS
2			4			27

DRAWN BY : D. HODGE DATE : 5/18

CHECKED BY : G.M. GILLAND DATE : 5/18

DOCUMENT NOT CONSIDERED FINAL UNLESS ALL SIGNATURES COMPLETED

P:\2018\18127.02_R-2582A\Structures\Site 1\DGN\STR2_RTLNR2582A_SMU_ EBT_650127.dgn
9/5/2018 4:50:57 PM

DocuSign Envelope ID: 18ACA90A-401B-4229-8AAF-94D960D4156B

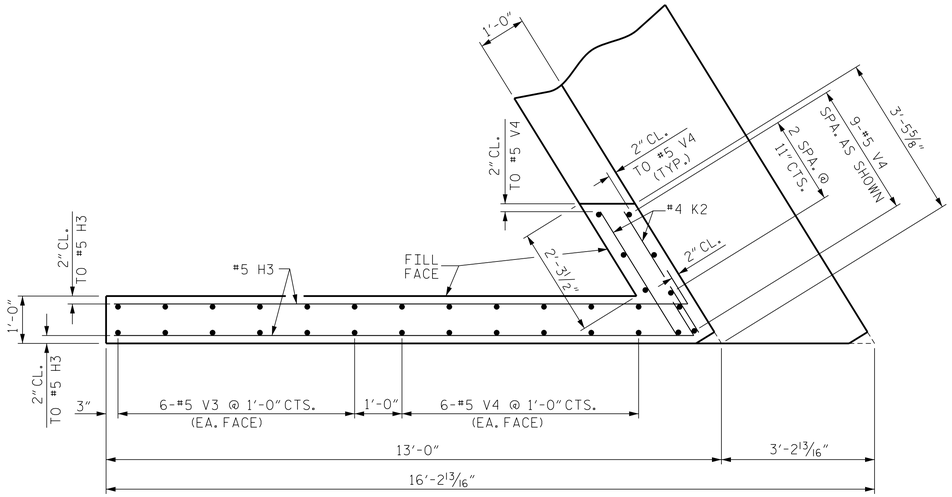

PLAN OF WING - (W1)

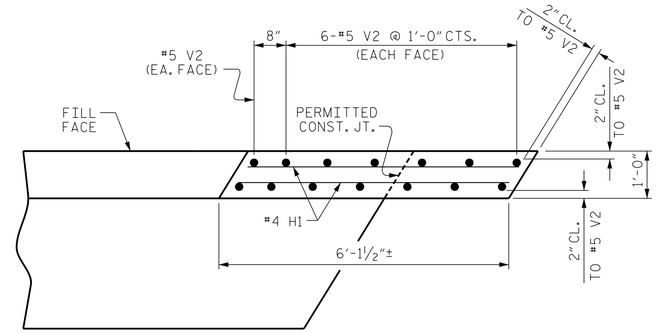

PLAN OF WING - (W2)

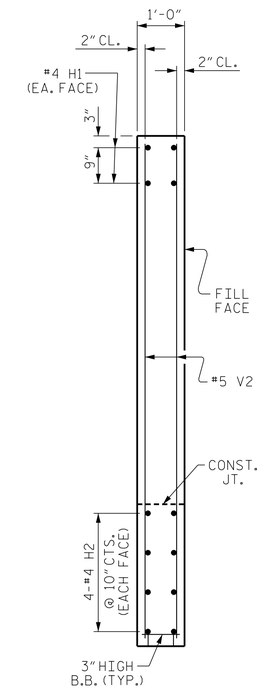

SECTION X-X

(K1 BARS NOT SHOWN)

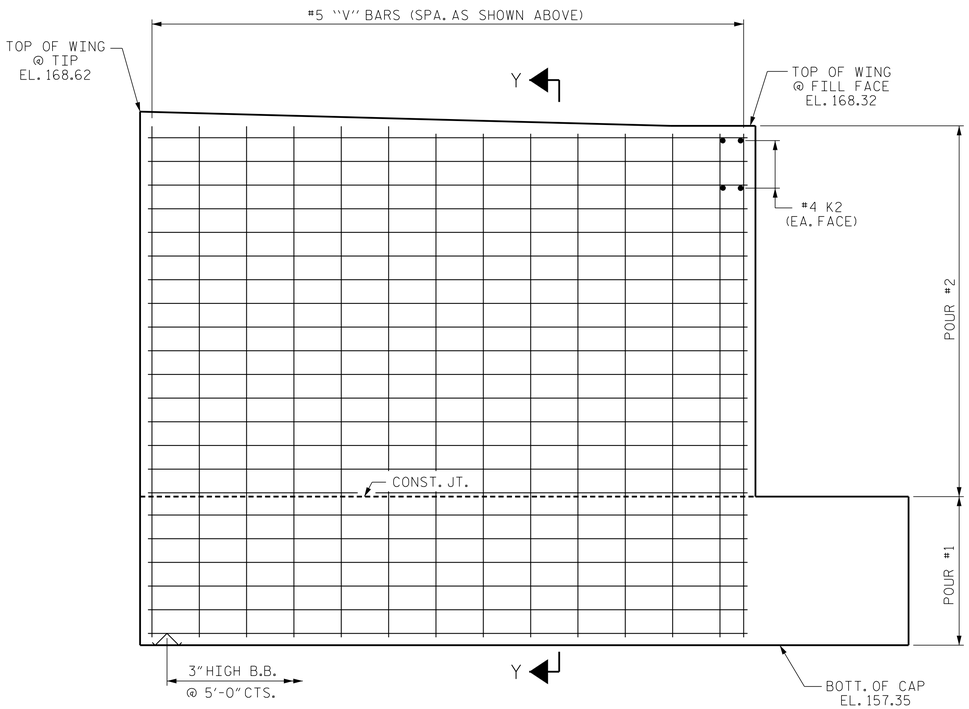

ELEVATION OF WING - (W1)

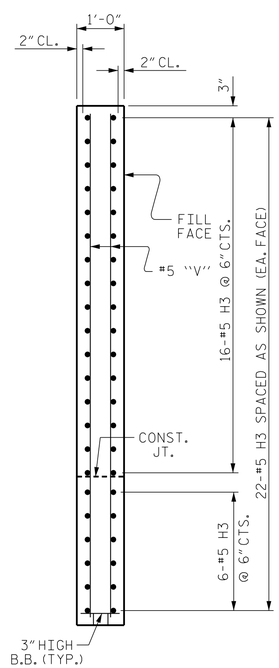

SECTION Y-Y

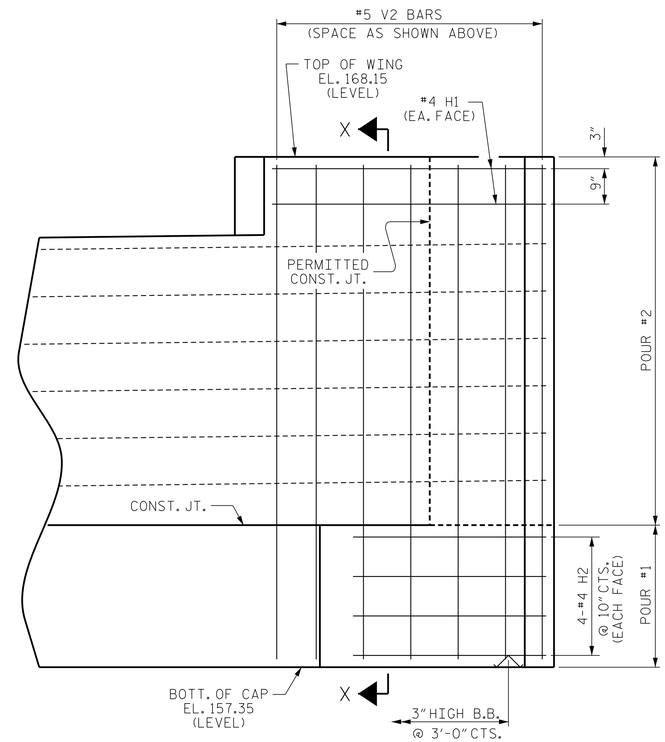

ELEVATION OF WING - (W2)

PROJECT NO. R-2582A

NORTHAMPTON COUNTY

STATION: 170+20.99 -L-

SHEET 2 OF 3

DOCUMENT NOT CONSIDERED FINAL UNLESS ALL SIGNATURES COMPLETED

ENGINEER OF RECORD:

Gregory M. Gilland

NORTH CAROLINA PROFESSIONAL SEAL 37400 ENGINEER GREGORY M. GILLAND

9/12/2018

WETHERILL ENGINEERING

1223 Jones Franklin Rd.
Raleigh, N.C. 27606
Bus: 919 851 8077
Fax: 919 851 8107
LICENSE NO. F-0377

STATE OF NORTH CAROLINA
DEPARTMENT OF TRANSPORTATION
RALEIGH

SUBSTRUCTURE

END BENT No. 2

RIGHT LANE

REVISIONS						SHEET NO.
NO.	BY:	DATE:	NO.	BY:	DATE:	S2-23
1			3			TOTAL SHEETS
2			4			27

DRAWN BY : D. HODGE DATE : 5/18

CHECKED BY : G.M. GILLAND DATE : 5/18

P:\2018\18127.02 R-2582A\Structures\Site 1\DGN\STR2_RTLN\R2582A_SMU_ EBT_650127.dgn
9/5/2018 4:51:35 PM

DocuSign Envelope ID: C819CF5D-9855-4109-969A-0FA2D650F43E

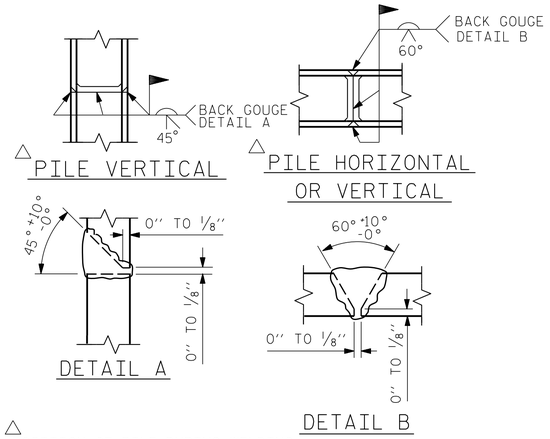

PILE SPLICE DETAILS

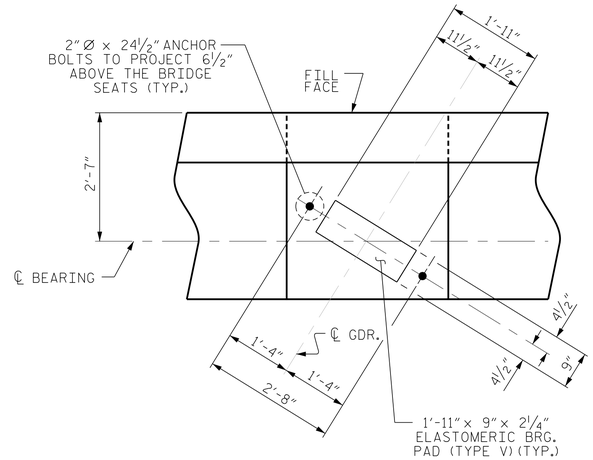

DETAIL "A"

(TYP. EA. GIRDER)

BAR TYPES

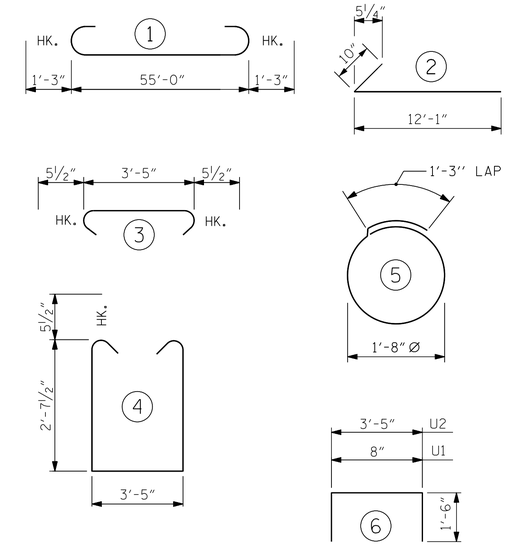

ALL BAR DIMENSIONS ARE OUT TO OUT.

BILL OF MATERIAL

END BENT No. 2

BAR	NO.	SIZE	TYPE	LENGTH	WEIGHT
B1	10	#9	1	57'-6"	1955
B2	4	#5	STR	55'-3"	231
B3	8	#4	STR	28'-11"	155
B4	14	#4	STR	3'-5"	32
B5	10	#4	STR	2'-11"	19
H1	4	#4	STR	5'-8"	15
H2	8	#4	STR	4'-2"	22
H3	44	#5	2	12'-11"	593
K1	36	#4	STR	21'-0"	505
K2	4	#4	STR	2'-10"	8
S1	72	#5	4	9'-7"	720
S2	72	#5	3	4'-4"	325
S3	36	#4	5	6'-6"	156
U1	49	#4	6	3'-8"	120
U2	6	#4	6	6'-5"	26
V1	98	#5	STR	8'-9"	894
V2	14	#5	STR	10'-5"	152
V3	12	#5	STR	10'-9"	135
V4	21	#5	STR	10'-7"	232

REINFORCING STEEL 6,295 LBS.

CLASS A CONCRETE BREAKDOWN

POUR #1	CAP AND LOWER PART OF WINGS	25.4 C.Y.
POUR #2	BACKWALL AND UPPER PART OF WINGS	17.2 C.Y.
TOTAL CLASS A CONCRETE		42.6 C.Y.

HP 12 X 53 STEEL PILES
NO: 9 860 L.F.

PILE DRIVING EQUIPMENT SETUP FOR HP 12 X 53 STEEL PILES 9 EA.

PILE REDRIVES 5 EA.

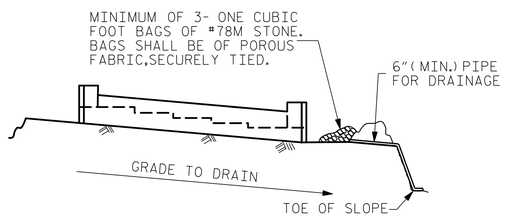

BAGGED STONE AND PIPE SHALL BE PLACED IMMEDIATELY AFTER COMPLETION OF END BENT EXCAVATION. PIPE MAY BE EITHER CONCRETE, CORRUGATED STEEL, CORRUGATED ALUMINUM ALLOY, OR CORRUGATED PLASTIC. PERFORATED PIPE WILL NOT BE ALLOWED.

BAGGED STONE SHALL REMAIN IN PLACE UNTIL THE ENGINEER DIRECTS THAT IT BE REMOVED. THE CONTRACTOR SHALL REMOVE AND DISPOSE OF SILT ACCUMULATIONS AT BAGGED STONE WHEN SO DIRECTED BY THE ENGINEER. BAGS SHALL BE REMOVED AND REPLACED WHENEVER THE ENGINEER DETERMINES THAT THEY HAVE DETERIORATED AND LOST THEIR EFFECTIVENESS.

NO SEPARATE PAYMENT WILL BE MADE FOR THIS WORK AND THE ENTIRE COST OF THIS WORK SHALL BE INCLUDED IN THE UNIT CONTRACT PRICE BID FOR THE SEVERAL PAY ITEMS.

TEMPORARY DRAINAGE AT END BENT

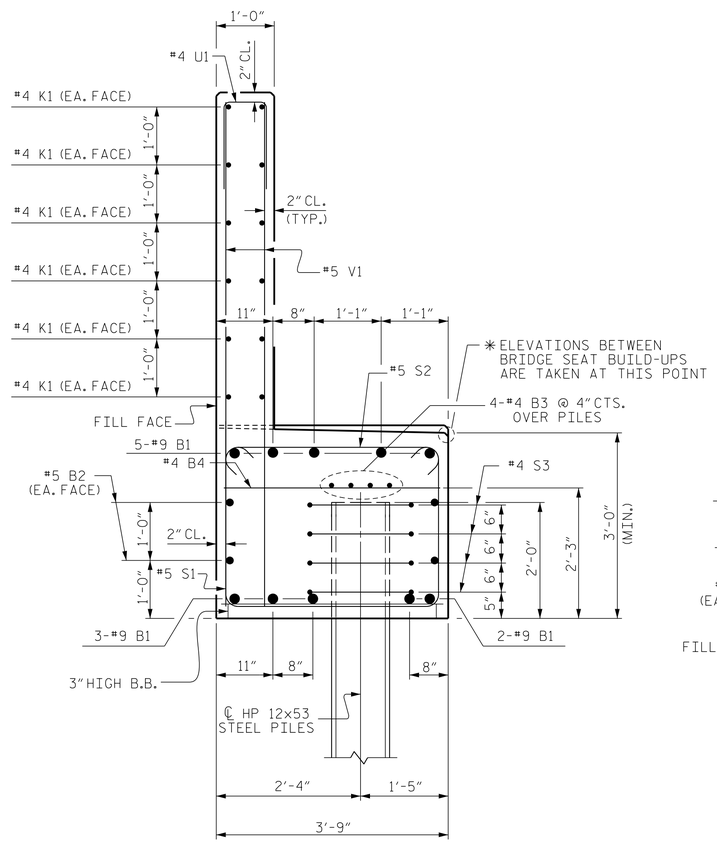

SECTION A-A

NOTES

STIRRUPS IN CAP MAY BE SHIFTED AS NECESSARY TO CLEAR ANCHOR BOLTS.

BACKWALL SHALL BE PLACED BEFORE APPLYING THE EPOXY PROTECTIVE COATING.

THE TOP SURFACE AREAS OF THE END BENT CAP SHALL BE CURED IN ACCORDANCE WITH THE STANDARD SPECIFICATIONS EXCEPT THE MEMBRANE CURING COMPOUND METHOD SHALL NOT BE USED.

THE TOP SURFACE OF THE END BENT CAP EXCEPT THE BRIDGE SEAT BUILDUPS SHALL BE SLOPED TRANSVERSELY FROM THE FILL FACE TO THE BACK FACE AT THE RATE OF 2%.

THE CONCRETE IN THE SHADED AREA OF THE WING SHALL BE POURED AFTER BARRIER RAILS ARE CAST IF SLIP FORMING IS USED.

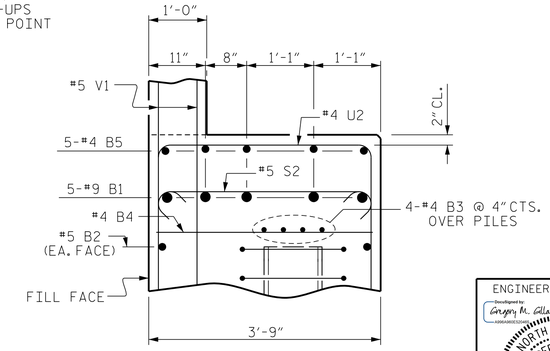

SECTION B-B

PROJECT NO. R-2582A
NORTHAMPTON COUNTY
STATION: 170+20.99 -L-

SHEET 3 OF 3

ENGINEER OF RECORD:
Gregory M. Gilland
NORTH CAROLINA PROFESSIONAL SEAL 37400 ENGINEER GREGORY M. GILLAND
9/25/2018

WETHERILL ENGINEERING
1223 Jones Franklin Rd.
Raleigh, N.C. 27606
Bus: 919 851 8077
Fax: 919 851 8107
LICENSE NO. F-0377

STATE OF NORTH CAROLINA
DEPARTMENT OF TRANSPORTATION
RALEIGH

SUBSTRUCTURE
END BENT No. 2
RIGHT LANE

REVISIONS						SHEET NO.
NO.	BY:	DATE:	NO.	BY:	DATE:	S2-24
1			3			TOTAL SHEETS
2			4			27

DRAWN BY : D. HODGE DATE : 5/18
CHECKED BY : G.M. GILLAND DATE : 5/18

DOCUMENT NOT CONSIDERED FINAL UNLESS ALL SIGNATURES COMPLETED

P:\2018\18127.02 R-2582A\Structures\Site 1\DGN\STR2_RTLN\R2582A_SMU_ EBT_650127.dgn
9/24/2018 3:40:26 PM

DocuSign Envelope ID: 18ACA90A-401B-4229-8AAF-94D960D4156B

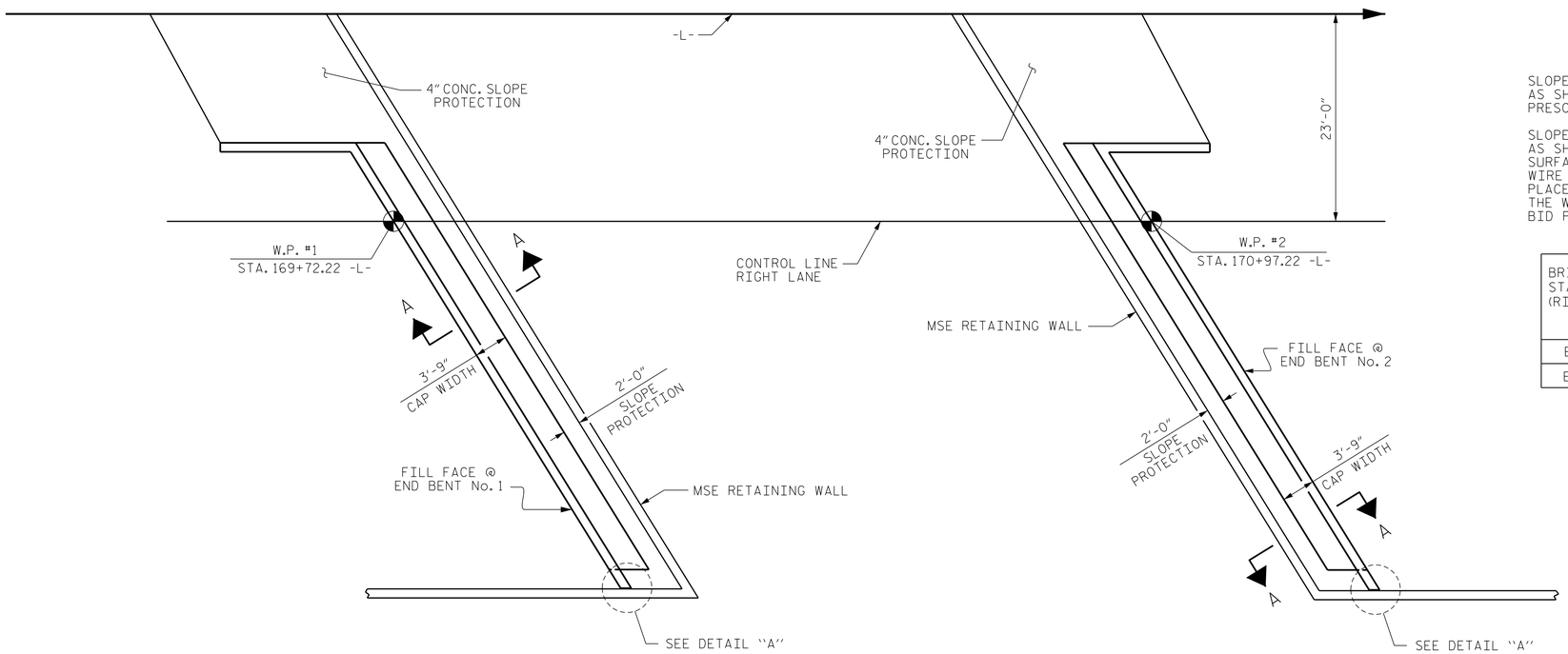

END BENT No. 1

END BENT No. 2

PLAN

NOTES

SLOPE PROTECTION SHALL BE PLACED UNDER THE ENDS OF THE BRIDGE AS SHOWN IN THE DETAILS. MEASUREMENT AND PAYMENT SHALL BE AS PRESCRIBED IN SECTION 462 OF THE STANDARD SPECIFICATIONS.

SLOPE PROTECTION SHALL CONSIST OF 4" POURED-IN-PLACE CONCRETE PAVING AS SHOWN IN THE DETAILS. CONCRETE SHALL BE CLASS "B". THE CONCRETE SURFACE SHALL BE FINISHED TO THE SATISFACTION OF THE ENGINEER. WELDED WIRE FABRIC REINFORCING SHALL BE 6 X 6 - W1.4 X W1.4. 20" WIDE AND PLACED IN THE MIDDLE OF THE 4" CONCRETE SLOPE PROTECTION. THE COST OF THE WELDED WIRE FABRIC SHALL BE INCLUDED IN THE CONTRACT UNIT PRICE BID PER SQUARE YARD FOR SLOPE PROTECTION.

BRIDGE @ STA. 170+20.99 -L- (RIGHT LANE)	4" SLOPE PROTECTION	WELDED WIRE FABRIC 20 INCHES WIDE
	SQUARE YARDS	APPROX. L.F.
END BENT 1	52	91
END BENT 2	50	88

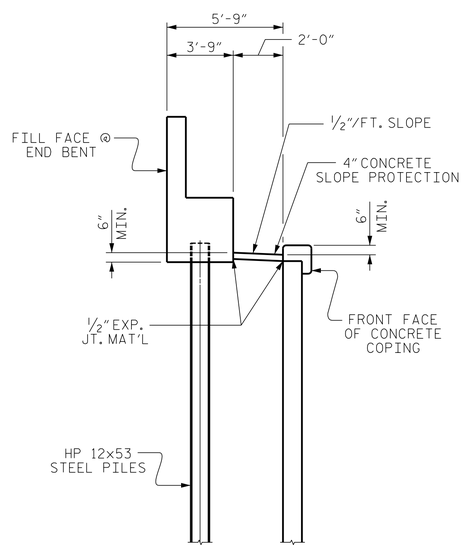

SECTION A-A

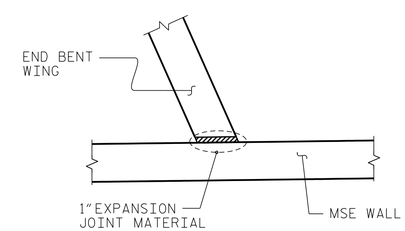

DETAIL "A"

(TYP. EACH WING TO MSE WALL CONNECTION)

PROJECT NO. R-2582A

NORTHAMPTON COUNTY

STATION: 170+20.99 -L-

ENGINEER OF RECORD:

Gregory M. Gilland

NORTH CAROLINA PROFESSIONAL SEAL 37400 ENGINEER GREGORY M. GILLAND

9/12/2018

WETHERILL ENGINEERING

1223 Jones Franklin Rd.
Raleigh, N.C. 27606
Bus: 919 851 8077
Fax: 919 851 8107
LICENSE NO. F-0377

STATE OF NORTH CAROLINA
DEPARTMENT OF TRANSPORTATION
RALEIGH

SLOPE PROTECTION DETAILS

RIGHT LANE

REVISIONS						SHEET NO.
NO.	BY:	DATE:	NO.	BY:	DATE:	S2-25
1			3			TOTAL SHEETS
2			4			27

DOCUMENT NOT CONSIDERED FINAL UNLESS ALL SIGNATURES COMPLETED

DRAWN BY : D. HODGE DATE : 4/18
CHECKED BY : G.M. GILLAND DATE : 5/18

P:\2018\18127.02 R-2582A\Structures\Site 1\DGN\STR2_RTLN\R2582A_SMU_ SP_650127.dgn
9/5/2018 5:11:01 PM

DocuSign Envelope ID: C819CF5D-9855-4109-969A-0FA2D650F43E

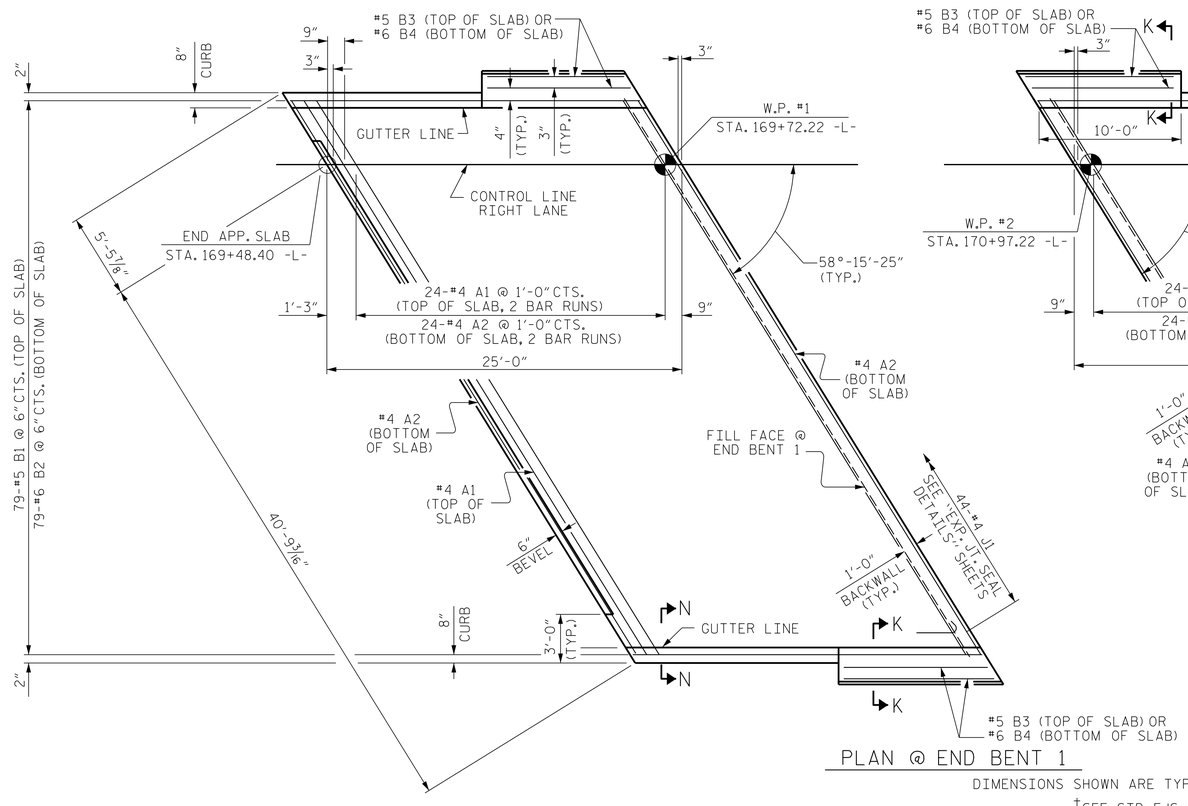

PLAN @ END BENT 1

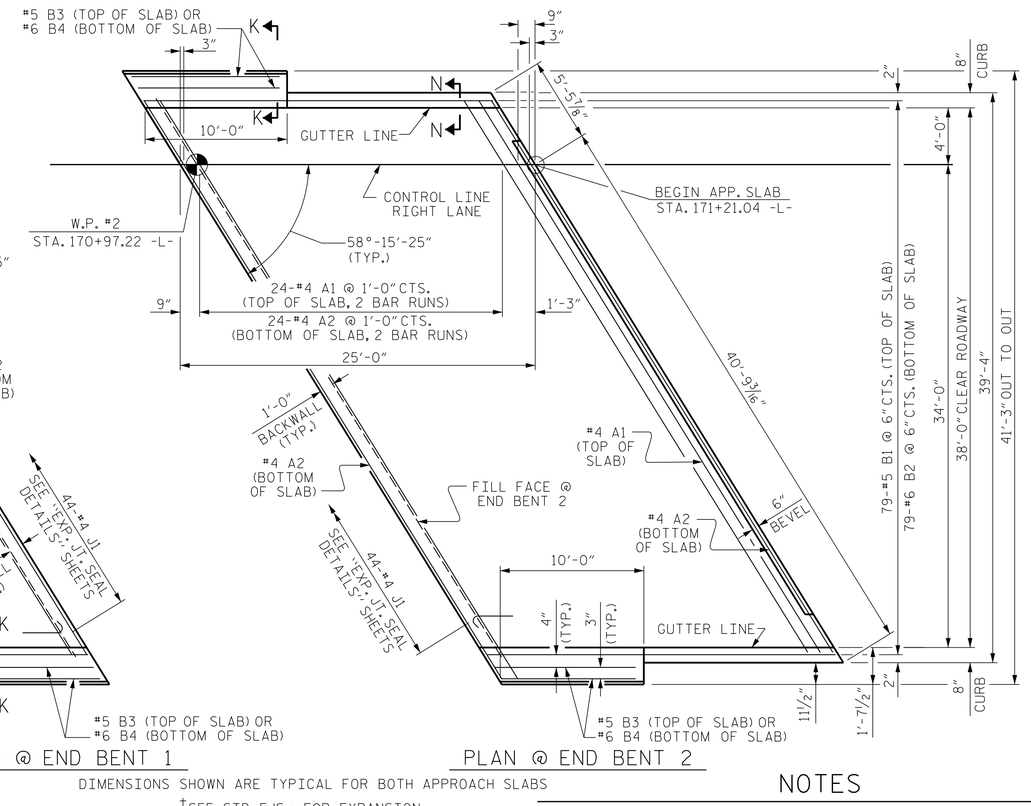

PLAN @ END BENT 2

DIMENSIONS SHOWN ARE TYPICAL FOR BOTH APPROACH SLABS

BILL OF MATERIAL

APPROACH SLAB AT BENT 1

BAR	NO.	SIZE	TYPE	LENGTH	WEIGHT
✻ A1	50	#4	STR	25'-1"	838
A2	52	#4	STR	25'-0"	868
✻ B1	79	#5	STR	23'-6"	1936
B2	79	#6	STR	24'-7"	2917
✻ B3	4	#5	STR	9'-10"	41
B4	4	#6	STR	9'-10"	59
✻ J1	44	#4	1	1'-5"	42
REINFORCING STEEL ✻✻				LBS.	3,844
✻ EPOXY COATED REINFORCING STEEL ✻✻				LBS.	2,857
CLASS AA CONCRETE ✻✻				C.Y.	43.6

APPROACH SLAB AT BENT 2

BAR	NO.	SIZE	TYPE	LENGTH	WEIGHT
✻ A1	50	#4	STR	25'-1"	838
A2	52	#4	STR	25'-0"	868
✻ B1	79	#5	STR	23'-6"	1936
B2	79	#6	STR	24'-7"	2917
✻ B3	4	#5	STR	9'-10"	41
B4	4	#6	STR	9'-10"	59
✻ J1	44	#4	1	1'-5"	42
REINFORCING STEEL ✻✻				LBS.	3,844
✻ EPOXY COATED REINFORCING STEEL ✻✻				LBS.	2,857
CLASS AA CONCRETE ✻✻				C.Y.	43.6

BAR TYPE

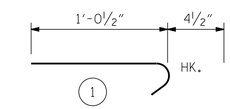

ALL BAR DIMENSIONS ARE OUT TO OUT

✻✻ QUANTITIES FOR BARRIER RAIL ARE NOT INCLUDED. SEE SHEET 2 OF 2.

THE QUANTITY OF #4 J1 BARS ON THE BILL OF MATERIAL IS BASED ON 1'-0" CENTERS. J1 BARS SHALL BE PLACED AT EACH VERTICAL STUD ANCHOR BOLT. IN THE EVENT THAT THE NUMBER OF VERTICAL STUD ANCHORS EXCEEDS THE NUMBER OF J1 BARS SPECIFIED, ADDITIONAL J1 BARS WILL NOT BE REQUIRED.

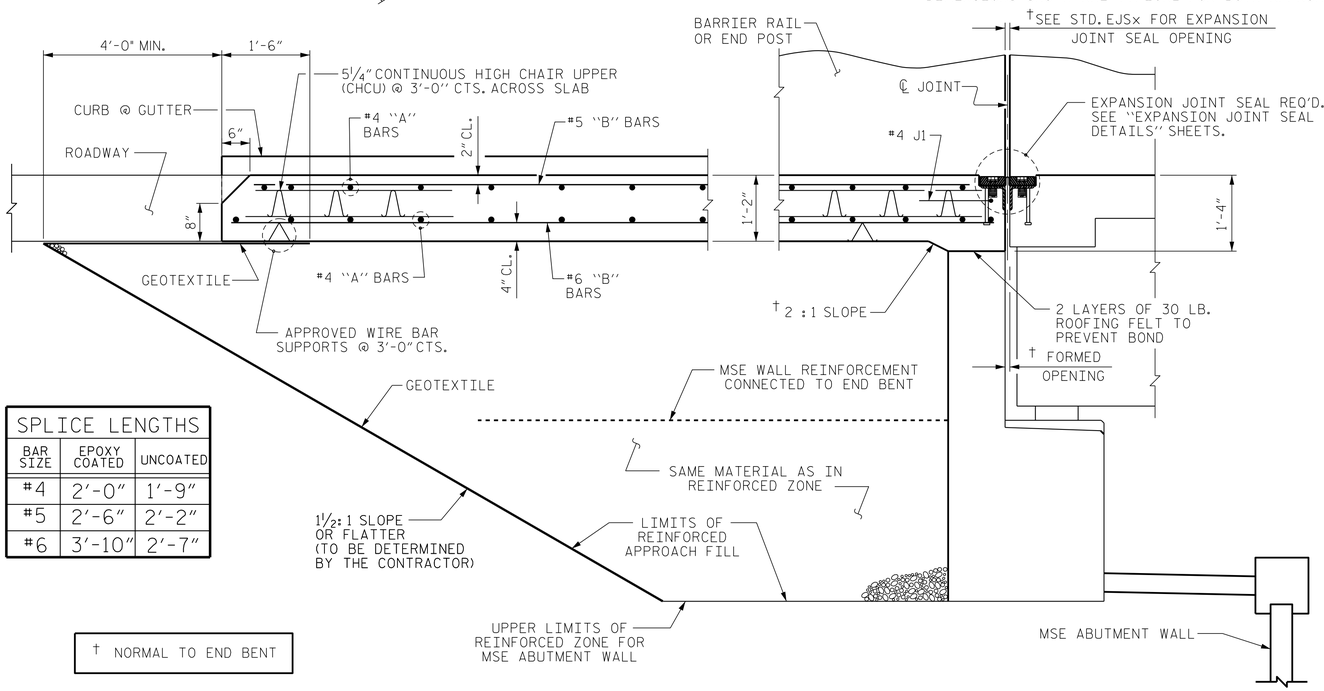

SPLICE LENGTHS		
BAR SIZE	EPOXY COATED	UNCOATED
#4	2'-0"	1'-9"
#5	2'-6"	2'-2"
#6	3'-10"	2'-7"

† NORMAL TO END BENT

SECTION THRU SLAB

(TYPE III - REINFORCED APPROACH FILL)

NOTES

FOR BRIDGE APPROACH FILL INCLUDING GEOTEXTILE, MSE WALL REINFORCEMENT AND BACKFILL MATERIAL SEE ROADWAY PLANS.

GEOTEXTILE SHALL BE TYPE 1 IN ACCORDANCE WITH THE STANDARD SPECIFICATIONS SECTION 1056.

BACKFILL MATERIAL SHALL BE THE SAME MATERIAL USED IN THE MSE REINFORCED ZONE.

APPROACH SLAB SHALL NOT BE CONSTRUCTED PRIOR TO COMPLETION OF THE BRIDGE DECK.

AREA BETWEEN THE WINGWALL AND APPROACH SLAB SHALL BE GRADED TO DRAIN THE WATER AWAY FROM THE FILL FACE OF THE BRIDGE AND SHALL BE PAVED. SEE ROADWAY PLANS.

FOR EXPANSION JOINT SEALS, SEE SPECIAL PROVISIONS.

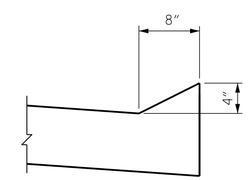

SECTION N-N

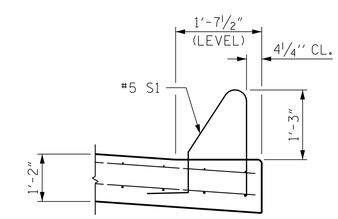

SECTION K-K

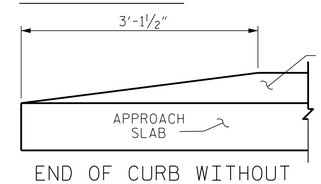

END OF CURB WITHOUT SHOULDER BERM GUTTER

CURB DETAILS

PROJECT NO. R-2582A

NORTHAMPTON COUNTY

STATION: 170+20.99 -L-

SHEET 1 OF 2

ENGINEER OF RECORD:

Gregory M. Gilland

NORTH CAROLINA PROFESSIONAL SEAL 37400 ENGINEER GREGORY M. GILLAND

9/25/2018

WETHERILL ENGINEERING

1223 Jones Franklin Rd.
Raleigh, N.C. 27606
Bus: 919 851 8077
Fax: 919 851 8107
LICENSE NO. F-0377

STATE OF NORTH CAROLINA
DEPARTMENT OF TRANSPORTATION
RALEIGH

STANDARD

BRIDGE APPROACH SLAB FOR FLEXIBLE PAVEMENT (RIGHT LANE)

REVISIONS						SHEET NO.
NO.	BY:	DATE:	NO.	BY:	DATE:	S2-26
1			3			TOTAL SHEETS
2			4			27

DOCUMENT NOT CONSIDERED FINAL UNLESS ALL SIGNATURES COMPLETED

ASSEMBLED BY : D. HODGE		DATE : 8/18	
CHECKED BY : G.M. GILLAND		DATE : 9/18	
DRAWN BY : EEM 3/95	REV. 12/21/11	MAA/GM	
CHECKED BY : VAP 3/95	REV. 6/13	MAA/GM	
	REV. 12/17	MAA/THC	

STD. NO. BAS2 (SHT 3a)

P:\2018\181127.02 R-2582A\Structures\Site 1\DGN\STR2_RTLN\R2582A_SMU_ AS_650127.dgn
9/24/2018 3:41:53 PM

DocuSign Envelope ID: 18ACA90A-401B-4229-8AAF-94D960D4156B

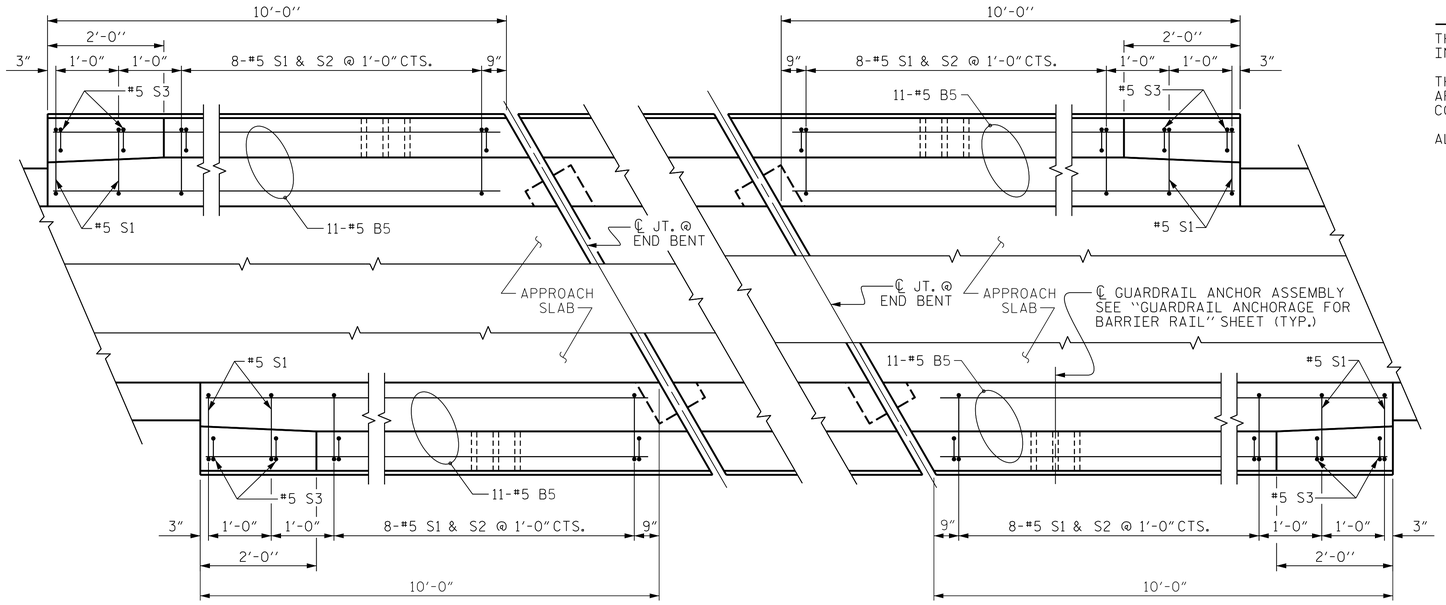

END BENT 1

END BENT 2

PLAN OF BARRIER RAIL

NOTES

THE COST OF THE BARRIER RAIL ON THE APPROACH SLAB SHALL BE INCLUDED IN THE LINEAR FOOT CONTRACT PRICE BID FOR "CONCRETE BARRIER RAIL".

THE BARRIER RAIL ON EACH APPROACH SLAB SHALL NOT BE CAST UNTIL ALL APPROACH SLAB CONCRETE HAS BEEN CAST AND HAS REACHED A MINIMUM COMPRESSIVE STRENGTH OF 3,000 PSI.

ALL REINFORCING STEEL IN BARRIER RAILS SHALL BE EPOXY COATED.

BAR TYPES

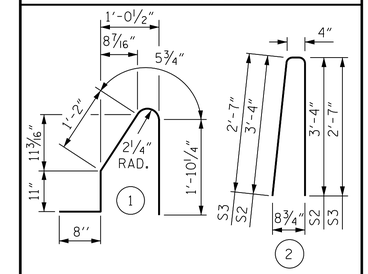

ALL BAR DIMENSIONS ARE OUT TO OUT

BILL OF MATERIAL

BARRIER RAIL ONLY

BAR	NO.	SIZE	TYPE	LENGTH	WEIGHT
✳B5	44	#5	STR	9'-10"	451
✳S1	40	#5	1	5'-1"	212
✳S2	32	#5	2	7'-0"	234
✳S3	8	#5	2	5'-6"	46
✳EPOXY COATED REINFORCING STEEL				LBS.	943
CLASS AA CONCRETE				C.Y.	5.7
CONCRETE BARRIER RAIL				41.86 LIN. FT.	

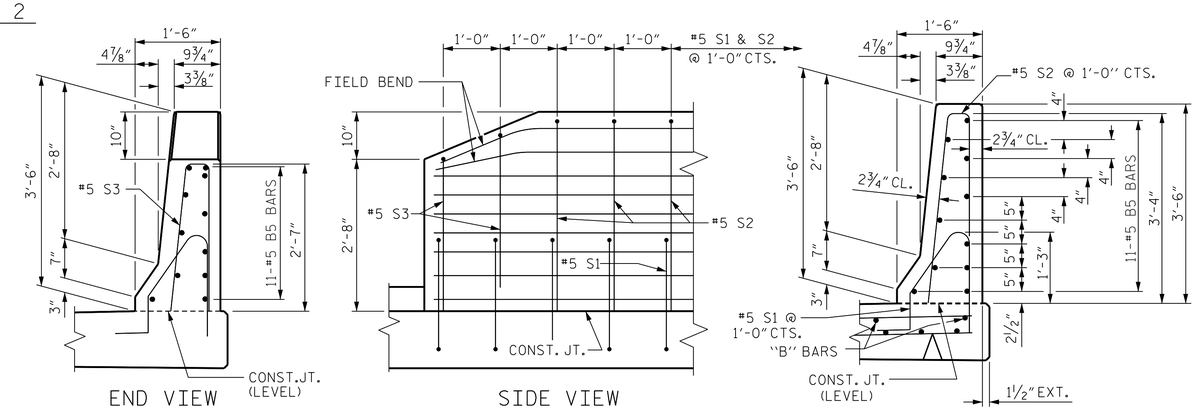

END VIEW

SIDE VIEW

END OF RAIL DETAILS

SECTION THRU RAIL

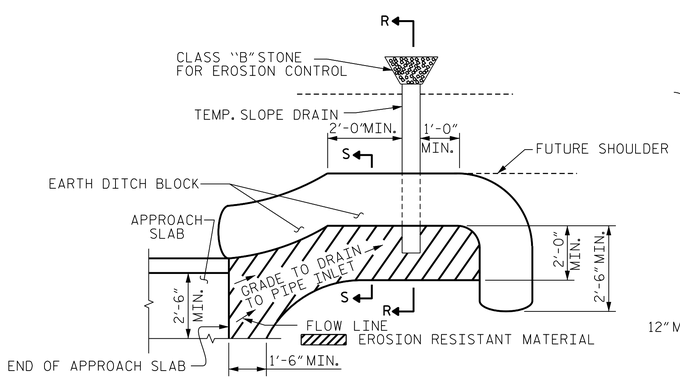

NOTE: IMMEDIATELY AFTER THE CONSTRUCTION OF THE APPROACH SLAB, THE CONTRACTOR SHALL PROVIDE TEMPORARY BERM AND SLOPE DRAIN. CONTRACTOR SHALL GRADE TO PIPE INLET AND PROVIDE EROSION RESISTANT MATERIAL AS SHOWN. THE EROSION RESISTANT MATERIAL SHALL BE EITHER 1) ASPHALT PLANT MIX, TYPE 1 OR TYPE 2, MIN. 2" DEPTH, 2) EROSION CONTROL MAT, OR 3) CONCRETE, AS DIRECTED BY THE ENGINEER. THE SLOPE DRAIN SHALL CONSIST OF A NON-PERFORATED TEMPORARY DRAINAGE PIPE, 12 INCHES IN DIAMETER.

PLAN VIEW

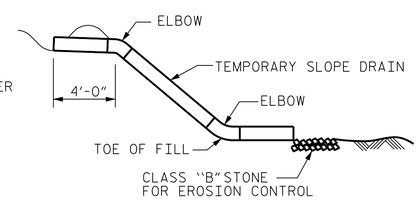

SECTION R-R

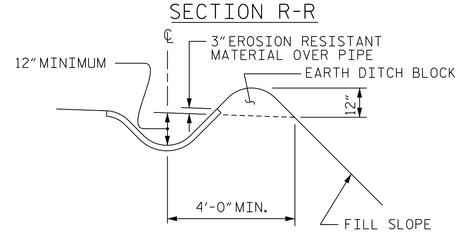

SECTION S-S

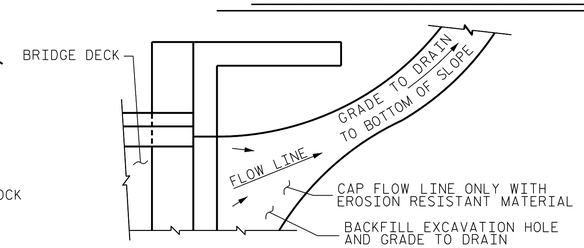

NOTE: IF THE APPROACH SLAB IS NOT CONSTRUCTED IMMEDIATELY AFTER THE BACKFILLING OF THE END BENT EXCAVATION, GRADE TO DRAIN TO THE BOTTOM OF THE SLOPE AND PROVIDE EROSION RESISTANT MATERIAL, SUCH AS FIBERGLASS ROVING OR AS DIRECTED BY THE ENGINEER TO PREVENT SOIL EROSION AND TO PROTECT THE AREA ADJACENT TO THE STRUCTURE. THE CONTRACTOR WILL BE REQUIRED TO REMOVE THESE MATERIALS PRIOR TO CONSTRUCTION OF THE APPROACH SLAB.

TEMPORARY DRAINAGE DETAIL

TEMPORARY BERM AND SLOPE DRAIN DETAILS

(TO BE USED WHEN SHOULDER BERM GUTTER IS REQUIRED)

PROJECT NO. R-2582A

NORTHAMPTON COUNTY

STATION: 170+20.99 -L-

SHEET 2 OF 2

ENGINEER OF RECORD:

Gregory M. Gilland

NORTH CAROLINA PROFESSIONAL SEAL 37400 ENGINEER GREGORY M. GILLAND

9/12/2018

WETHERILL ENGINEERING

1223 Jones Franklin Rd.
Raleigh, N.C. 27606
Bus: 919 851 8077
Fax: 919 851 8107
LICENSE NO. F-0377

STATE OF NORTH CAROLINA
DEPARTMENT OF TRANSPORTATION
RALEIGH

STANDARD

BRIDGE APPROACH SLAB DETAILS

(RIGHT LANE)

REVISIONS						SHEET NO.
NO.	BY:	DATE:	NO.	BY:	DATE:	S2-27
1			3			TOTAL SHEETS
2			4			27

ASSEMBLED BY : D. HODGE		DATE :	8/18
CHECKED BY : G.M. GILLAND		DATE :	9/18
DRAWN BY : FCJ	11/88	REV. 6/13	MAA/GM
CHECKED BY : ARB	11/88	REV. 12/17	MAA/THC
		REV. 5/18	MAA/THC

DOCUMENT NOT CONSIDERED FINAL UNLESS ALL SIGNATURES COMPLETED

P:\2018\18127.02 R-2582A\Structures\Site 1\DGN\STR2_RTLNVR2582A_SMU_ AS_650127.dgn
9/5/2018 4:34:31 PM

STD. NO. BAS4 (SHT 3a)

DocuSign Envelope ID: 055690B4-FFE3-441E-B1AB-BA43025BCD9B

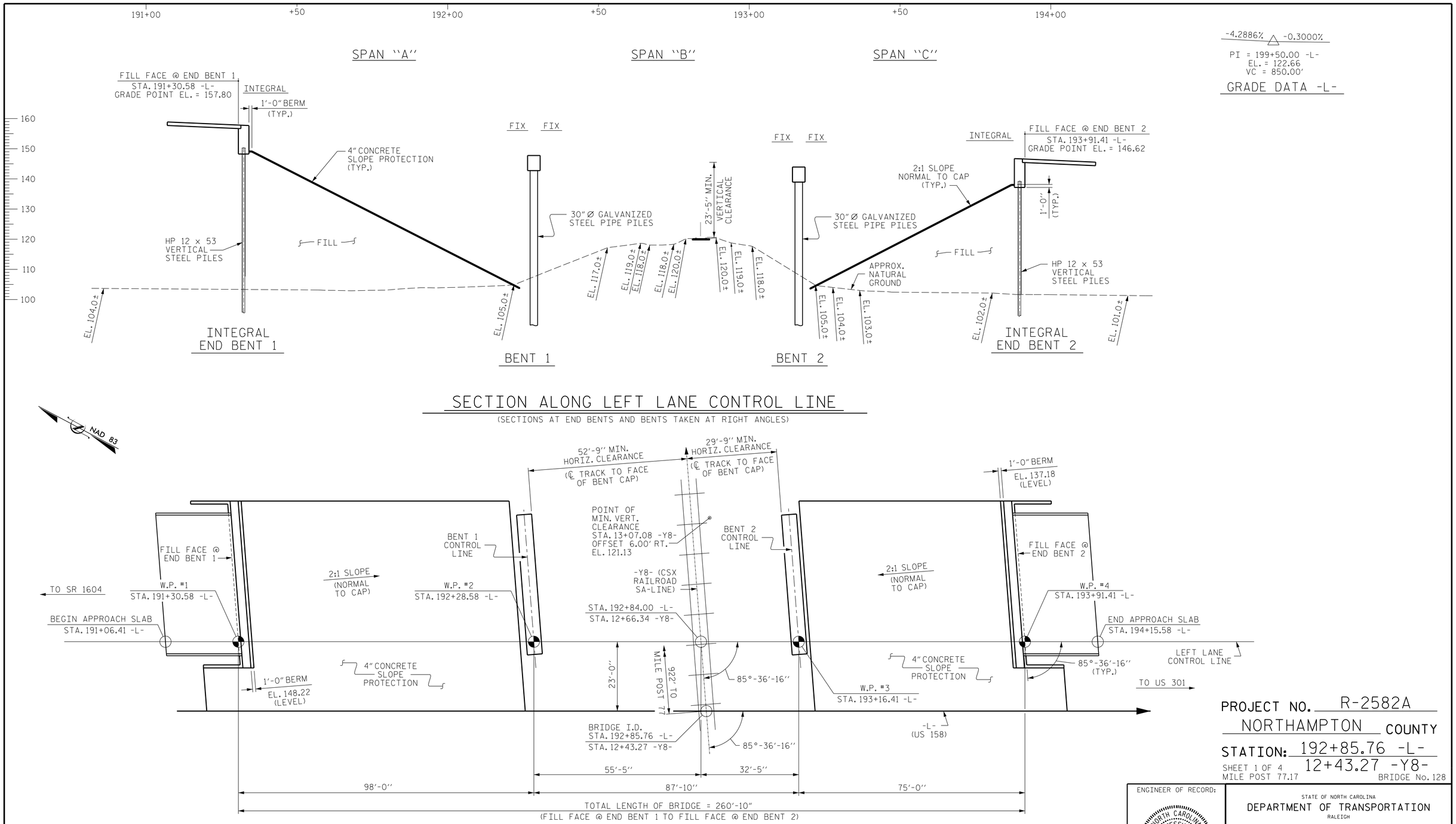

PROJECT NO. R-2582A

NORTHAMPTON COUNTY

STATION: 192+85.76 -L-
12+43.27 -Y8-

SHEET 1 OF 4
MILE POST 77.17
BRIDGE No. 128

ENGINEER OF RECORD:

NORTH CAROLINA PROFESSIONAL SEAL 37400 ENGINEER

DocuSigned by: Gregory M. Gilland
A996A960E...

2/1/2019

WETHERILL ENGINEERING
1223 Jones Franklin Rd.
Raleigh, N.C. 27606
Bus: 919 851 8077
Fax: 919 851 8107
LICENSE NO. F-0377

STATE OF NORTH CAROLINA
DEPARTMENT OF TRANSPORTATION
RALEIGH

GENERAL DRAWING

LEFT LANE BRIDGE
ON US 158 OVER CSX SA-LINE
BETWEEN SR 1604 & US 301

REVISIONS						SHEET NO.
NO.	BY:	DATE:	NO.	BY:	DATE:	S3-1
1			3			TOTAL SHEETS
2			4			38

DOCUMENT NOT CONSIDERED FINAL UNLESS ALL SIGNATURES COMPLETED

DRAWN BY : D. HODGE DATE : 10/18
CHECKED BY : G.M. GILLAND DATE : 1/19

P:\2018\18127.02 R-2582A\Structures\Revision (Site 2)\Site 2\DGN\LEFT LANE\R2582A_SMU_ GD_650128rev.dgn
1/31/2019 9:46:45 AM

DocuSign Envelope ID: 0556690B4-FFE3-441E-B1AB-BA43025BCD9B

BM #4: R/R SPIKE IN 24" SWEET GUM, 450' LT. OF STA. 197+65 -L-, ELEV. = 102.47

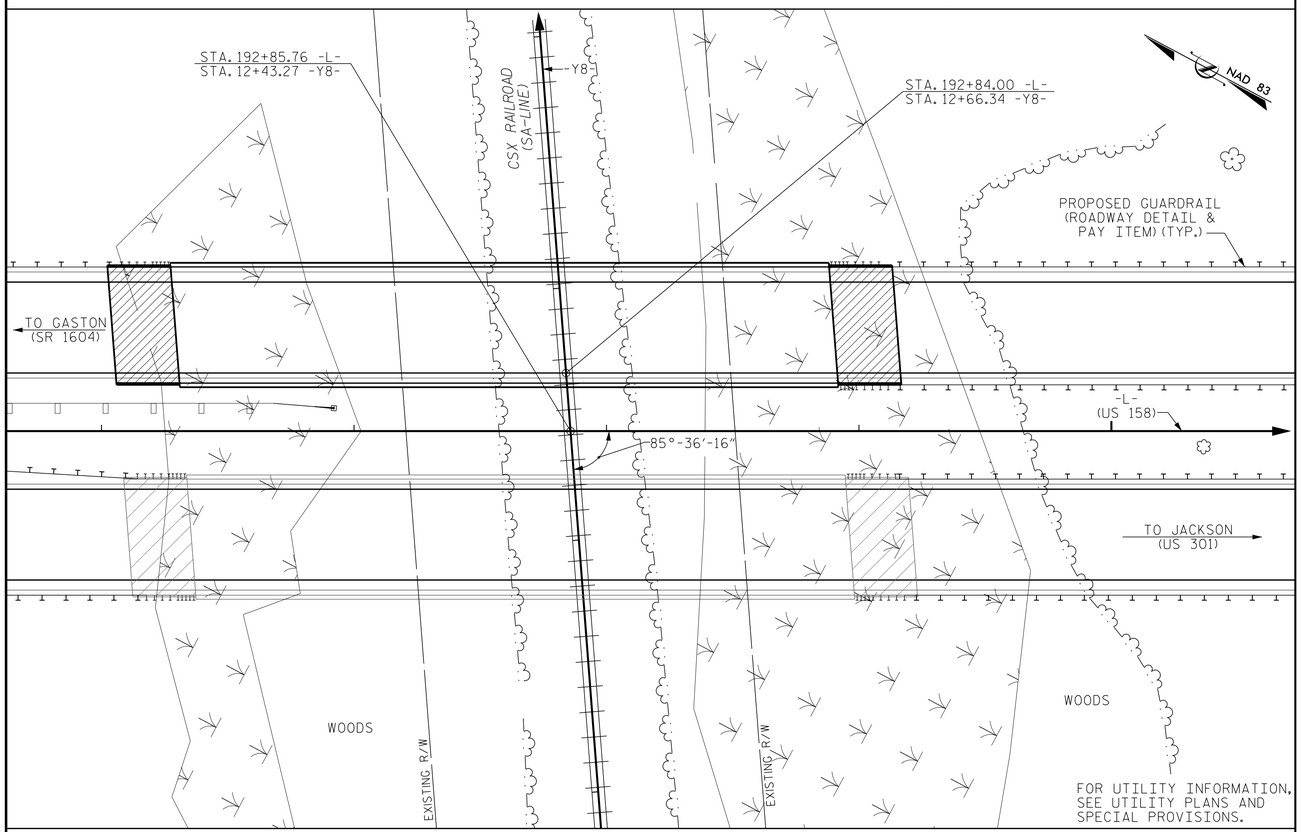

LOCATION SKETCH

RAILROAD EROSION CONTROL DETAIL

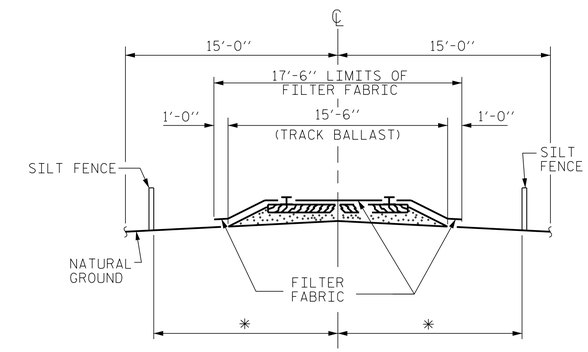

* TO BE DETERMINED BY THE RESIDENT ENGINEER IN CONSULTATION WITH THE RAILROAD ENGINEER.

NOTES

RAILROAD EROSION CONTROL MEASURES SHALL BE INSTALLED PRIOR TO PERFORMING ANY WORK IN THE RAILROAD RIGHT-OF-WAY.

ADDITIONAL EROSION CONTROL MEASURES FOR PROTECTION OF RAILROAD DITCHES MAY BE REQUIRED AS DIRECTED BY THE ENGINEER.

NO SEPARATE PAYMENT WILL BE MADE FOR RAILROAD EROSION CONTROL MEASURES.

LIMITS OF SILT FENCE AND FILTER FABRIC PARALLEL TO RAILROAD SHALL EXTEND A MINIMUM OF 25'-0" OUTSIDE EDGE OF SUPERSTRUCTURE OR TOE OF SLOPE ON CONSTRUCTION. A GREATER LENGTH OF SILT FENCE OR FILTER FABRIC MAY BE REQUIRED IF SO DIRECTED BY THE ENGINEER.

FILTER FABRIC TO BE NAILED TO TIMBER RAIL TIES WITH PRIME SOURCE "GRIP CAP" OR EQUIVALENT. FILTER FABRIC ON SHOULDER TO BE SECURED AS DIRECTED BY THE ENGINEER AND RAILROAD.

TOP OF RAIL ELEVATIONS

-Y8- (CSX SA-LINE)		
STATION	LEFT RAIL	RIGHT RAIL
8+20.29	117.74	117.71
9+01.53	118.26	118.26
9+82.26	118.72	118.73
10+00.00	118.63	118.63
10+87.93	119.31	---
11+02.75	---	119.46
12+11.80	120.37	120.34
12+96.15	121.04	121.04
13+89.68	121.81	121.81
14+76.35	122.48	122.46
15+65.81	123.25	123.24
15+79.35	123.54	123.54
16+33.02	124.04	124.07

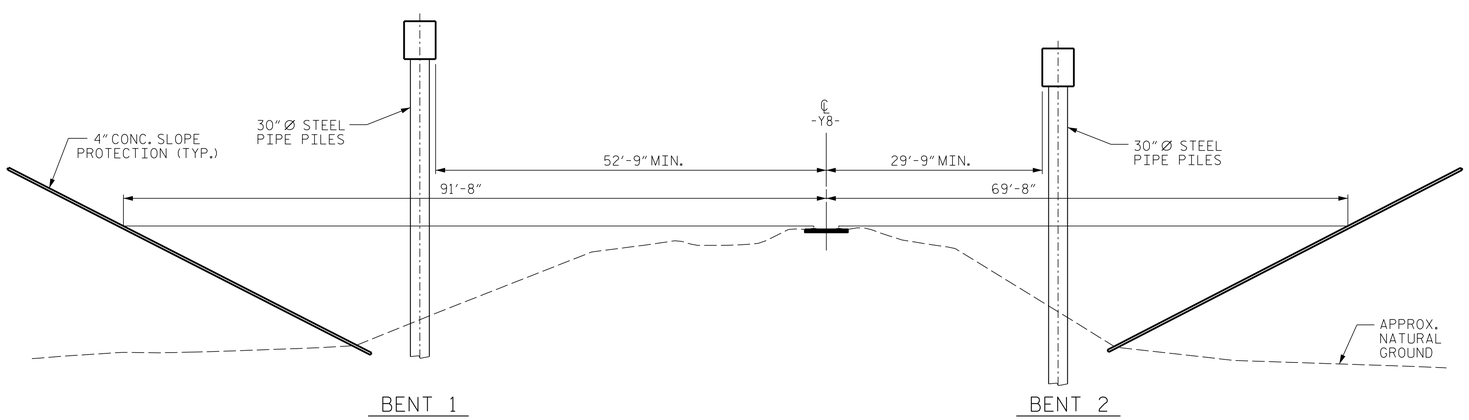

SECTION THROUGH RAILROAD

LOOKING IN DIRECTION OF INCREASING STATIONS ON RAILROAD
(SPAN LENGTH BASED ON THIS SECTION)

PROJECT NO. R-2582A
NORTHAMPTON COUNTY
STATION: 192+85.76 -L-

SHEET 2 OF 4

ENGINEER OF RECORD:

NORTH CAROLINA PROFESSIONAL SEAL 37400 ENGINEER

Docu Sign Envelope ID: A996A960ED5E4...
2/1/2019

WETHERILL ENGINEERING
1223 Jones Franklin Rd.
Raleigh, N.C. 27606
Bus: 919 851 8077
Fax: 919 851 8107
LICENSE NO. F-0377

STATE OF NORTH CAROLINA
DEPARTMENT OF TRANSPORTATION
RALEIGH

GENERAL DRAWING

LEFT LANE BRIDGE
ON US 158 OVER CSX SA-LINE
BETWEEN SR 1604 & US 301

REVISIONS						SHEET NO.
NO.	BY:	DATE:	NO.	BY:	DATE:	S3-2
1			3			TOTAL SHEETS
2			4			38

DRAWN BY : D. HODGE DATE : 10/18
CHECKED BY : G.M. GILLAND DATE : 1/19

DOCUMENT NOT CONSIDERED FINAL UNLESS ALL SIGNATURES COMPLETED

P:\2018\18127.02 R-2582A\Structures\Revision (Site 2\Site 2\DGN\LEFT LANE\R2582A_SMU_ GD_650128rev.dgn
1/31/2019 9:52:39 AM

DocuSign Envelope ID: 0556690B4-FFE3-441E-B1AB-BA43025BCD9B

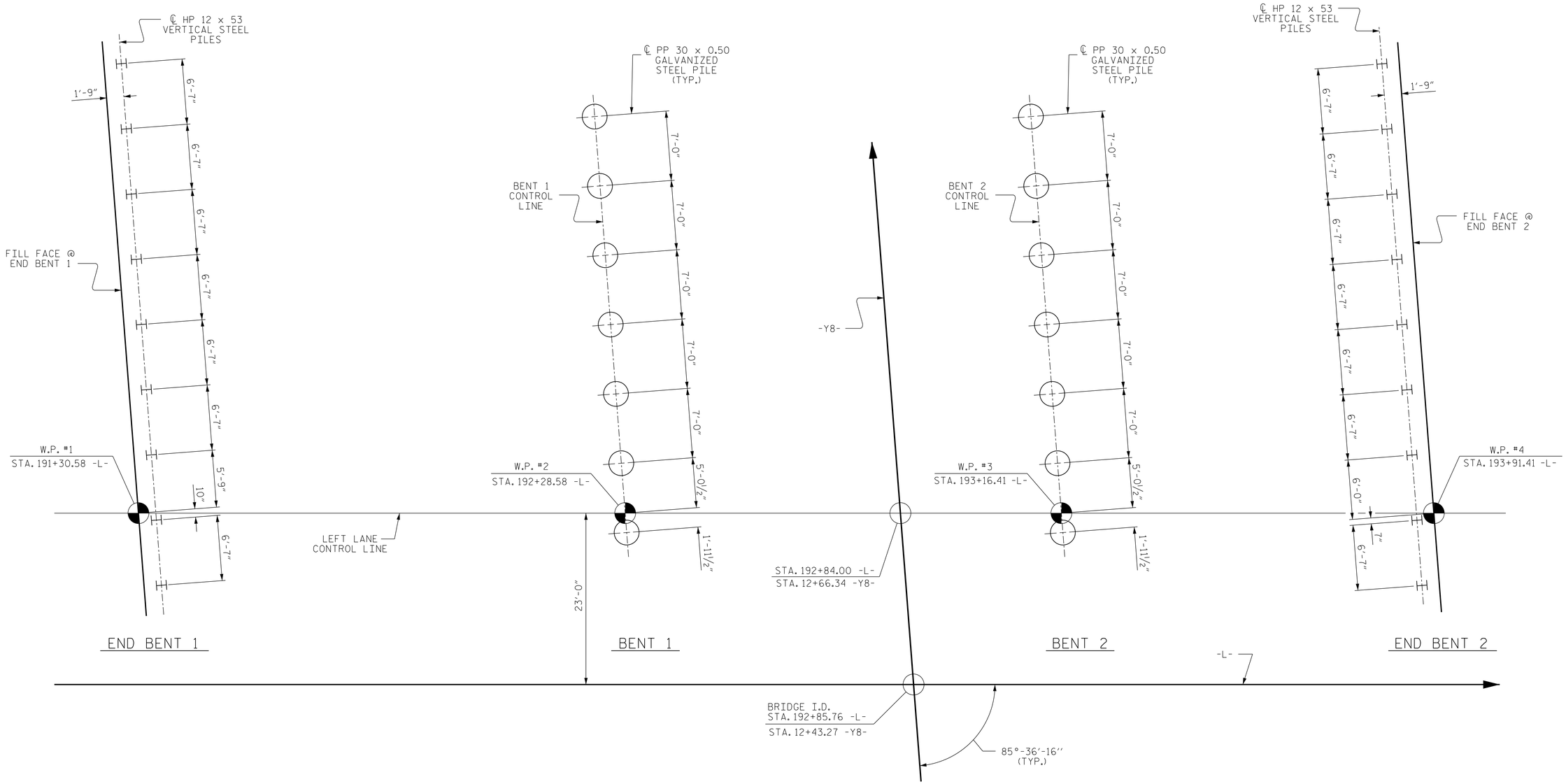

FOUNDATION LAYOUT

PROJECT NO. R-2582A
NORTHAMPTON COUNTY
STATION: 192+85.76 -L-

SHEET 3 OF 4

FOUNDATION NOTES:

FOR PILES, SEE SECTION 450 OF THE STANDARD SPECIFICATIONS.

PILES AT END BENTS NO. 1 AND 2 ARE DESIGNED FOR A FACTORED RESISTANCE OF 110 TONS PER PILE.

DRIVE PILES AT END BENTS NO. 1 AND 2 TO A REQUIRED DRIVING RESISTANCE OF 185 TONS PER PILE.

PILES AT BENTS NO. 1 AND 2 ARE DESIGNED FOR A FACTORED RESISTANCE OF 245 TONS PER PILE.

DRIVE PILES AT BENTS NO. 1 AND 2 TO A REQUIRED DRIVING RESISTANCE OF 330 TONS PER PILE.

INSTALL PILES AT BENT NO. 1 TO A TIP ELEVATION NO HIGHER THAN 78.5 FT.

INSTALL PILES AT BENT NO. 2 TO A TIP ELEVATION NO HIGHER THAN 70.5 FT.

IT HAS BEEN ESTIMATED THAT A HAMMER WITH AN EQUIVALENT RATED ENERGY IN THE RANGE OF 66,300 TO 107,000 FT-LBS PER BLOW WILL BE REQUIRED TO DRIVE PILES AT BENTS NO. 1 & 2. THIS ESTIMATED ENERGY RANGE DOES NOT RELEASE THE CONTRACTOR FROM PROVIDING DRIVING EQUIPMENT IN ACCORDANCE WITH SUBARTICLE 450-3(D)(2) OF THE STANDARD SPECIFICATIONS.

OBSERVE A 5 MONTH WAITING PERIOD AFTER CONSTRUCTING THE EMBANKMENT TO WITHIN 2 FT OF FINISHED GRADE BEFORE BEGINNING END BENT CONSTRUCTION AT END BENTS NO. 1 & 2. FOR BRIDGE WAITING PERIODS, SEE ROADWAY PLANS AND SECTION 235 OF THE STANDARD SPECIFICATIONS.

OBSERVE A 5 MONTH WAITING PERIOD AFTER CONSTRUCTING THE EMBANKMENT TO WITHIN 2 FT OF FINISHED GRADE AT THE APROACHES OF THE BOTH END BENTS BEFORE BEGINNING CONSTRUCTION AT BENTS NO. 1 & 2. FOR BRIDGE WAITING PERIODS, SEE ROADWAY PLANS AND SECTION 235 OF THE STANDARD SPECIFICATIONS.

TESTING THE FIRST PRODUCTION PILE WITH THE PDA DURING DRIVING, RESTRIKING OR REDRIVING IS REQUIRED AT BENTS NO. 1 OR 2. FOR PDA TESTING, SEE SECTION 450 OF THE STANDARD SPECIFICATIONS.

TESTING PILES WITH THE PDA DURING DRIVING, RESTRIKING OR REDRIVING MAY BE REQUIRED AT END BENTS 1 & 2. THE ENGINEER WILL DETERMINE THE NEED FOR PDA TESTING. FOR PDA TESTING, SEE SECTION 450 OF THE STANDARD SPECIFICATIONS.

PIPE PILE PLATES ARE REQUIRED FOR STEEL PIPE PILES AT BENTS NO. 1 & 2. USE PIPE PILE PLATES WITH A DIAMETER EQUAL TO THE PIPE PILE DIAMETER. FOR STEEL PIPE PILE PLATES, SEE SECTION 450 OF THE STANDARD SPECIFICATIONS.

SEE ROADWAY PLANS AND SECTION 235 OF THE STANDARD SPECIFICATIONS FOR THE SETTLEMENT GAUGES REQUIRED AT END BENT NO. 1, END BENT NO. 2, INTERIOR BENT NO. 1, AND INTERIOR BENT NO. 2.

DRAWN BY : D. HODGE DATE : 11/18
CHECKED BY : G.M. GILLAND DATE : 12/18

DOCUMENT NOT CONSIDERED FINAL UNLESS ALL SIGNATURES COMPLETED

ENGINEER OF RECORD:
NORTH CAROLINA PROFESSIONAL SEAL 37400 ENGINEER GREGORY M. GILLAND
DocuSigned by: Gregory M. Gilland
A99A4A6C5C7D4D0...
2/1/2019

WETHERILL ENGINEERING
1223 Jones Franklin Rd.
Raleigh, N.C. 27606
Bus: 919 851 8077
Fax: 919 851 8107
LICENSE NO. F-0377

STATE OF NORTH CAROLINA
DEPARTMENT OF TRANSPORTATION
RALEIGH

GENERAL DRAWING

LEFT LANE BRIDGE
ON US 158 OVER CSX SA-LINE
BETWEEN SR 1604 & US 301

REVISIONS						SHEET NO.
NO.	BY:	DATE:	NO.	BY:	DATE:	S3-3
1			3			TOTAL SHEETS
2			4			38

P:\2018\18127.02 R-2582A\Structures\Revision (Site 2)\Site 2\DGN\LEFT LANE\R2582A_SMU_ FL_650128rev.dgn
1/31/2019 10:15:32 AM

DocuSign Envelope ID: 224528F0-0F95-4F76-A9C5-38258D5BEEA0

NOTES:

ASSUMED LIVE LOAD = HL-93 OR ALTERNATE LOADING.

THIS BRIDGE HAS BEEN DESIGNED IN ACCORDANCE WITH THE REQUIREMENTS OF THE AASHTO LRFD BRIDGE DESIGN SPECIFICATIONS.

THIS BRIDGE IS LOCATED IN SEISMIC ZONE 1.

FOR OTHER DESIGN DATA AND GENERAL NOTES, SEE SHEET SN.

FOR SUBMITTAL OF WORKING DRAWINGS, SEE SPECIAL PROVISIONS.

FOR FALSEWORK AND FORMWORK, SEE SPECIAL PROVISIONS.

FOR CRANE SAFETY, SEE SPECIAL PROVISIONS.

FOR GROUT FOR STRUCTURES, SEE SPECIAL PROVISIONS.

PRESTRESSED CONCRETE DECK PANELS MAY BE USED IN LIEU OF METAL STAY-IN-PLACE FORMS IN ACCORDANCE WITH ARTICLE 420-3 OF THE STANDARD SPECIFICATIONS.

REMOVABLE FORMS MAY BE USED IN LIEU OF METAL STAY-IN-PLACE FORMS IN ACCORDANCE WITH ARTICLE 420-3 OF THE STANDARD SPECIFICATIONS.

THE RAILROAD TRACK TOP OF RAIL ELEVATIONS ON THE PLANS ARE FROM THE BEST INFORMATION AVAILABLE. PRIOR TO BEGINNING BRIDGE CONSTRUCTION, VERIFY THE TOP OF RAIL ELEVATIONS AND REPORT ANY VARIATIONS TO THE ENGINEER. ANY PLAN REVISIONS NECESSARY TO ACHIEVE THE REQUIRED MINIMUM CLEARANCE WILL BE PROVIDED BY THE DEPARTMENT.

NEEDLE BEAMS WILL NOT BE ALLOWED UNLESS OTHERWISE CALLED FOR ON THE PLANS OR APPROVED BY THE ENGINEER.

FOR INTERIOR BENTS, ONLY PARTIAL GALVANIZING OF THE PILES IS REQUIRED. SEE INTERIOR BENT SHEETS FOR REQUIRED GALVANIZED LENGTHS. PAYMENT FOR PARTIALLY GALVANIZED PILES WILL BE MADE UNDER THE CONTRACT UNIT PRICE FOR GALVANIZED STEEL PILES.

FOR EROSION CONTROL MEASURES, SEE EROSION CONTROL PLANS.

FOR RAILROAD PROVISIONS, SEE SPECIAL PROVISIONS.

TOTAL BILL OF MATERIAL

	PDA TESTING	REINFORCED CONCRETE DECK SLAB	GROOVING BRIDGE FLOORS	CLASS A CONCRETE	BRIDGE APPROACH SLABS	REINFORCING STEEL	54" PRESTRESSED CONCRETE GIRDERS		PILE DRIVING EQUIPMENT SETUP FOR HP 12 X 53 STEEL PILES	PILE DRIVING EQUIPMENT SETUP FOR PP 30 X 0.50 GALVANIZED STEEL PILES	HP 12 x 53 STEEL PILES		PP 30 x 0.50 GALVANIZED STEEL PILES		PIPE PILE PLATES	PILE REDRIVES	CONCRETE BARRIER RAIL	72" CHAIN LINK FENCE	4" SLOPE PROTECTION	ELASTOMERIC BEARINGS
	EACH	SQ. FT.	SQ. FT.	CU. YDS.	LUMP SUM	LBS.	No.	LIN. FT.	EACH	EACH	No.	LIN. FT.	No.	LIN. FT.	EACH	EACH	LIN. FT.	LIN. FT.	SQ. YDS.	LUMP SUM
SUPERSTRUCTURE		12,846	13,236		LUMP SUM		15	1,285.42									518.33	504.0		LUMP SUM
END BENT No. 1				46.5		7,560			9		9	810				5			815	
BENT No. 1				40.0		4,370				7			7	819	7	4				
BENT No. 2				40.0		4,370				7			7	854	7	4				
END BENT No. 2				45.5		7,499			9		9	900				5			625	
TOTAL	2	12,846	13,236	172.0	LUMP SUM	23,799	15	1,285.42	18	14	18	1,710	14	1,673	14	18	518.33	504.0	1,440	LUMP SUM

PROJECT NO. R-2582A

NORTHAMPTON COUNTY

STATION: 192+85.76 -L-

SHEET 4 OF 4

ENGINEER OF RECORD:
3/26/2019

NORTH CAROLINA PROFESSIONAL SEAL 37400 ENGINEER GREGORY M. GILLAND

DocuSigned by: Gregory M. Gilland

WETHERILL ENGINEERING

1223 Jones Franklin Rd.
Raleigh, N.C. 27606
Bus: 919 851 8077
Fax: 919 851 8107
LICENSE NO. F-0377

STATE OF NORTH CAROLINA
DEPARTMENT OF TRANSPORTATION
RALEIGH

GENERAL DRAWING

LEFT LANE BRIDGE
ON US 158 OVER CSX SA-LINE
BETWEEN SR 1604 & US 301

REVISIONS						SHEET NO.
NO.	BY:	DATE:	NO.	BY:	DATE:	S3-4
1			3			TOTAL SHEETS
2			4			38

DRAWN BY : D. HODGE DATE : 10/18
CHECKED BY : G.M. GILLAND DATE : 1/19

DOCUMENT NOT CONSIDERED FINAL UNLESS ALL SIGNATURES COMPLETED

P:\2018\18127.02 R-2582A\Structures\Revision (Site 2)\Site 2\DGN\LEFT LANE\R2582A_SMU_ GD_650128rev.dgn
3/25/2019 7:49:42 AM

DocuSign Envelope ID: 055690B4-FFE3-441E-B1AB-BA43025BCD9B

LOAD AND RESISTANCE FACTOR RATING (LRFR) SUMMARY FOR PRESTRESSED CONCRETE GIRDERS

LEVEL		VEHICLE	WEIGHT (W) (TONS)	CONTROLLING LOAD RATING (#)	MINIMUM RATING FACTORS (RF)	TONS = W × RF	STRENGTH I LIMIT STATE											SERVICE III LIMIT STATE						COMMENT NUMBER
								MOMENT					SHEAR						MOMENT					
							LIVE-LOAD FACTORS (γ_{LL})	DISTRIBUTION FACTORS (DF)	RATING FACTOR	SPAN	GIRDER LOCATION	DISTANCE FROM LEFT END OF SPAN (ft)	DISTRIBUTION FACTORS (DF)	RATING FACTOR	SPAN	GIRDER LOCATION	DISTANCE FROM LEFT END OF SPAN (ft)	LIVE-LOAD FACTORS (γ_{LL})	DISTRIBUTION FACTORS (DF)	RATING FACTOR	SPAN	GIRDER LOCATION	DISTANCE FROM LEFT END OF SPAN (ft)	
DESIGN LOAD RATING		HL-93 (INVENTORY)	N/A	1	1.06	--	1.75	0.80	1.37	B	I	42.79	1.01	1.06	B	I	60.19	0.80	0.80	1.08	A	I	47.56	1 & 2
		HL-93 (OPERATING)	N/A		1.76	--	1.35	0.80	1.78	B	I	42.79	1.01	1.76	A	I	86.18	N/A	0.80	--	--	--	--	1 & 2
		HS-20 (INVENTORY)	36.000	2	1.49	53.64	1.75	0.80	1.85	B	I	42.79	1.01	1.78	B	I	77.59	0.80	0.80	1.49	A	I	47.56	1 & 2
		HS-20 (OPERATING)	36.000		2.33	83.88	1.35	0.80	2.40	B	I	42.79	1.01	2.33	B	I	77.59	N/A	0.80	--	--	--	--	1 & 2
LEGAL LOAD RATING	SINGLE VEHICLE (SV)	SNSH	13.500		3.52	47.52	1.40	0.80	5.37	B	I	42.79	1.01	5.57	B	I	77.59	0.80	0.80	3.52	A	I	47.56	1 & 2
		SNGARBS2	20.000		2.55	51.00	1.40	0.80	3.93	B	I	42.79	1.01	3.90	B	I	77.59	0.80	0.80	2.55	A	I	47.56	1 & 2
		SNAGRIS2	22.000		2.39	52.58	1.40	0.80	3.70	B	I	42.79	1.01	3.60	B	I	77.59	0.80	0.80	2.39	A	I	47.56	1 & 2
		SNCOTTS3	27.250		1.75	47.69	1.40	0.80	2.67	B	I	42.79	1.01	2.73	B	I	77.59	0.80	0.80	1.75	A	I	47.56	1 & 2
		SNAGGRS4	34.925		1.44	50.29	1.40	0.80	2.20	B	I	42.79	1.01	2.23	B	I	77.59	0.80	0.80	1.44	A	I	47.56	1 & 2
		SNS5A	35.550		1.40	49.77	1.40	0.80	2.16	B	I	42.79	1.01	2.25	B	I	77.59	0.80	0.80	1.40	A	I	47.56	1 & 2
		SNS6A	39.950		1.28	51.14	1.40	0.80	1.97	B	I	42.79	1.01	2.03	B	I	77.59	0.80	0.80	1.28	A	I	47.56	1 & 2
		SNS7B	42.000		1.22	51.24	1.40	0.80	1.88	B	I	42.79	1.01	1.98	B	I	77.59	0.80	0.80	1.22	A	I	47.56	1 & 2
	TRUCK TRACTOR SEMI-TRAILER (TTST)	TNAGRIT3	33.000		1.56	51.48	1.40	0.80	2.40	B	I	42.79	1.01	2.43	B	I	77.59	0.80	0.80	1.56	A	I	47.56	1 & 2
		TNT4A	33.075		1.56	51.60	1.40	0.80	2.41	B	I	42.79	1.01	2.39	B	I	77.59	0.80	0.80	1.56	A	I	47.56	1 & 2
		TNT6A	41.600		1.27	52.83	1.40	0.80	1.96	B	I	42.79	1.01	2.10	B	I	77.59	0.80	0.80	1.27	A	I	47.56	1 & 2
		TNT7A	42.000		1.27	53.34	1.40	0.80	1.96	B	I	42.79	1.01	2.06	B	I	77.59	0.80	0.80	1.27	A	I	47.56	1 & 2
		TNT7B	42.000		1.30	54.60	1.40	0.80	2.02	B	I	42.79	1.01	1.94	B	I	77.59	0.80	0.80	1.30	A	I	47.56	1 & 2
		TNAGRIT4	43.000		1.24	53.32	1.40	0.80	1.93	B	I	42.79	1.01	1.88	B	I	77.59	0.80	0.80	1.24	A	I	47.56	1 & 2
		TNAGT5A	45.000		1.18	53.10	1.40	0.80	1.82	B	I	42.79	1.01	1.84	B	I	77.59	0.80	0.80	1.18	A	I	47.56	1 & 2
		TNAGT5B	45.000	3	1.17	52.65	1.40	0.80	1.80	B	I	42.79	1.01	1.78	B	I	77.59	0.80	0.80	1.17	A	I	47.56	1 & 2

LOAD FACTORS:

DESIGN LOAD RATING FACTORS	LIMIT STATE	γ_{DC}	γ_{DW}
	STRENGTH I	1.25	1.50
	SERVICE III	1.00	1.00

NOTES:

MINIMUM RATING FACTORS ARE BASED ON THE STRENGTH I AND SERVICE III LIMIT STATES.

ALLOWABLE STRESSES FOR SERVICE III LIMIT STATE ARE AS REQUIRED FOR DESIGN.

COMMENTS:

1. END RESTRAINT FOR INTEGRAL END BENTS IS NOT CONSIDERED FOR LOAD RATING ANALYSIS.
2. LOAD RATING ASSUMES SIMPLE SPAN CONDITIONS PER NCDOT BRIDGE DESIGN MANUAL, CHAPTER 6.

(#) CONTROLLING LOAD RATING

(1) DESIGN LOAD RATING (HL-93)

(2) DESIGN LOAD RATING (HS-20)

(3) LEGAL LOAD RATING **

** SEE CHART FOR VEHICLE TYPE

GIRDER LOCATION

I - INTERIOR GIRDER
E - EXTERIOR LEFT AND RIGHT GIRDER

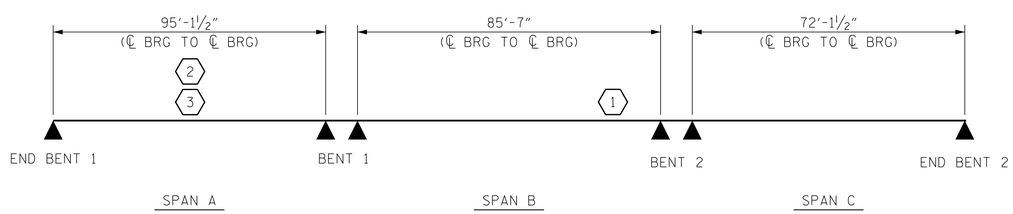

LRFR SUMMARY

PROJECT NO. R-2582A
NORTHAMPTON COUNTY
STATION: 192+85.76 -L-

ENGINEER OF RECORD:
NORTH CAROLINA PROFESSIONAL SEAL 37400 ENGINEER GREGORY M. GILLAND
DocuSigned by: Gregory M. Gilland
A996A960E5A4...
2/1/2019

WETHERILL ENGINEERING
1223 Jones Franklin Rd.
Raleigh, N.C. 27606
Bus: 919 851 8077
Fax: 919 851 8107
LICENSE NO. F-0377

STATE OF NORTH CAROLINA
DEPARTMENT OF TRANSPORTATION
RALEIGH

STANDARD
LRFR SUMMARY FOR PRESTRESSED CONCRETE GIRDERS
(NON-INTERSTATE TRAFFIC)
(LEFT LANE)

REVISIONS						SHEET NO.
NO.	BY:	DATE:	NO.	BY:	DATE:	S3-5
1			3			TOTAL SHEETS
2			4			38

DOCUMENT NOT CONSIDERED FINAL UNLESS ALL SIGNATURES COMPLETED

ASSEMBLED BY : G.M. GILLAND	DATE : 11-18		
CHECKED BY : B.C. HUNT	DATE : 11-18		
DRAWN BY : MAA 1/08	REV. 11/12/08RR	MAA/GM	
CHECKED BY : GM/DI 2/08	REV. 10/1/11	MAA/GM	
	REV. 12/17	MAA/THC	

STD. NO. LRFR1

P:\2018\18127.02 R-2582A\Structures\Revision (Site 2\Site 2\DGN\LEFT LANE\R2582A_SMU_ LR_650128rev.dgn
1/31/2019 10:17:16 AM

DocuSign Envelope ID: 0556690B4-FFE3-441E-B1AB-BA43025BCD9B

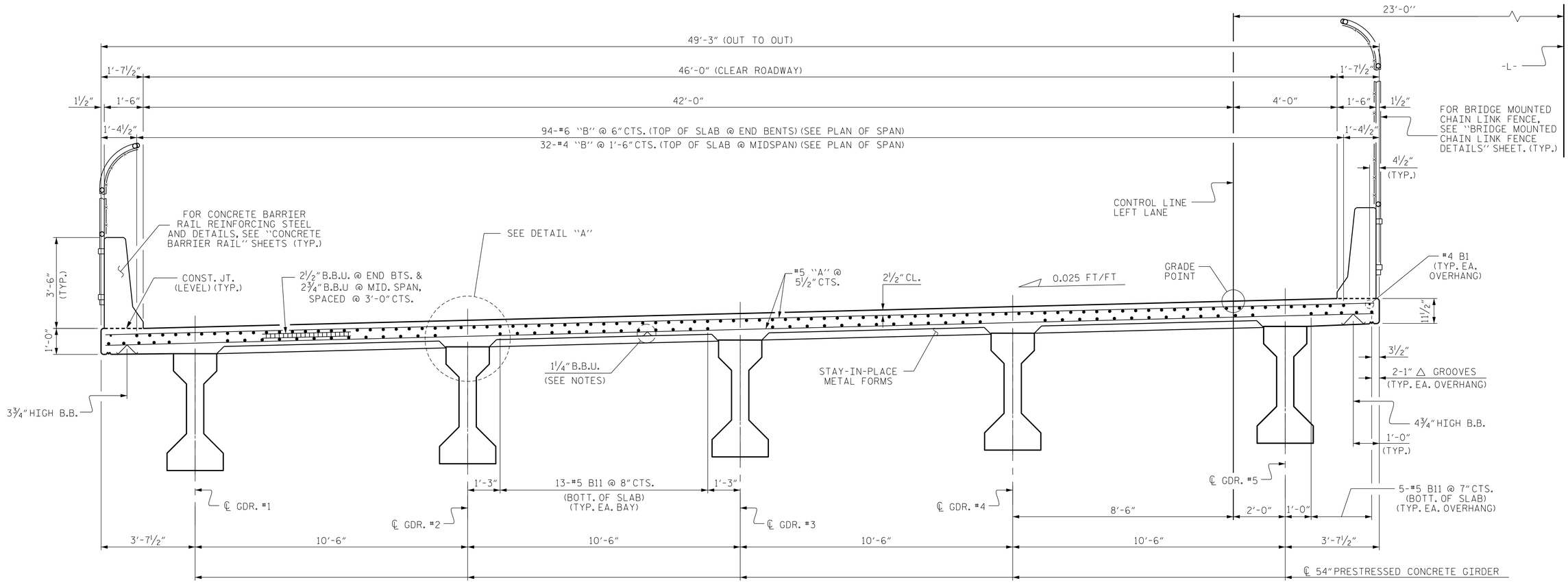

TYPICAL SECTION

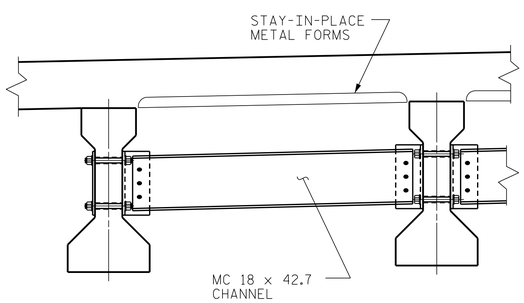

TYPICAL INTERMEDIATE DIAPHRAGM

SEE "INTERMEDIATE STEEL DIAPHRAGMS FOR TYPE IV PRESTRESSED CONCRETE GIRDERS" SHEET FOR DETAILS

NOTES

PROVIDE 1¼" HIGH BEAM BOLSTERS UPPER AT 4'-0" CTS. ATOP THE METAL STAY-IN-PLACE FORMS TO SUPPORT THE BOTTOM MAT OF 'A' BARS. WHEN USING REMOVABLE FORMS, PROVIDE CONTINUOUS HIGH CHAIRS FOR METAL DECK (C.H.C.M.) @ 4'-0" CTS. WITH A HEIGHT TO SUPPORT THE BOTTOM MAT OF 'A' BARS A CLEAR DISTANCE OF 2½" ABOVE THE TOP OF THE REMOVABLE FORM.

LONGITUDINAL STEEL MAY BE SHIFTED SLIGHTLY, AS NECESSARY, TO AVOID INTERFERENCE WITH STIRRUPS IN PRESTRESSED CONCRETE GIRDERS.

BARRIER RAIL IN A CONTINUOUS UNIT SHALL NOT BE CAST UNTIL ALL SLAB CONCRETE IN THE UNIT HAS BEEN CAST AND HAS REACHED A MINIMUM COMPRESSIVE STRENGTH OF 3,000 PSI.

PREVIOUSLY CAST CONCRETE SHALL HAVE ATTAINED A MINIMUM COMPRESSIVE STRENGTH OF 3,000 PSI BEFORE ADDITIONAL CONCRETE IS CAST IN THE SLAB.

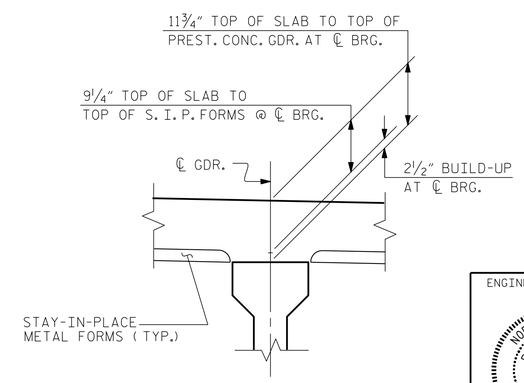

DETAIL "A"

PROJECT NO. R-2582A
NORTHAMPTON COUNTY
STATION: 192+85.76 -L-

SHEET 1 OF 3

ENGINEER OF RECORD:
NORTH CAROLINA PROFESSIONAL SEAL 37400 ENGINEER
Gregory W. Galland
A996A9608E3E3...
2/1/2019

WETHERILL ENGINEERING
1223 Jones Franklin Rd.
Raleigh, N.C. 27606
Bus: 919 851 8077
Fax: 919 851 8107
LICENSE NO. F-0377

STATE OF NORTH CAROLINA
DEPARTMENT OF TRANSPORTATION
RALEIGH

SUPERSTRUCTURE
TYPICAL SECTION
(LEFT LANE)

REVISIONS						SHEET NO.
NO.	BY:	DATE:	NO.	BY:	DATE:	S3-6
1			3			TOTAL SHEETS
2			4			38

DOCUMENT NOT CONSIDERED FINAL UNLESS ALL SIGNATURES COMPLETED

DRAWN BY : D. HODGE DATE : 10/18
CHECKED BY : T. KOCH DATE : 10/18

P:\2018\18127.02 R-2582A\Structures\Revision (Site 2)\Site 2\DGN\LEFT LANE\R2582A_SMU_ TS_650128rev.dgn
1/31/2019 10:18:33 AM

DocuSign Envelope ID: 055690B4-FFE3-441E-B1AB-BA43025BCD9B

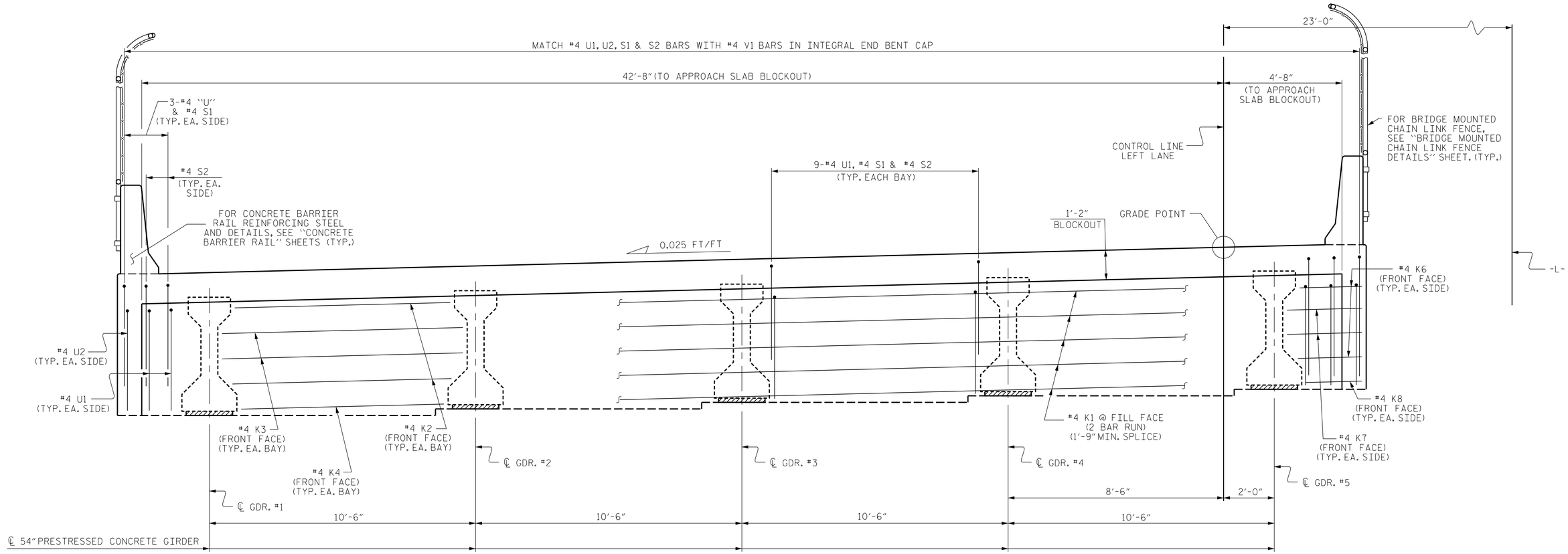

TYPICAL SECTION THROUGH INTEGRAL END BENT

DECK REINFORCEMENT NOT SHOWN FOR CLARITY

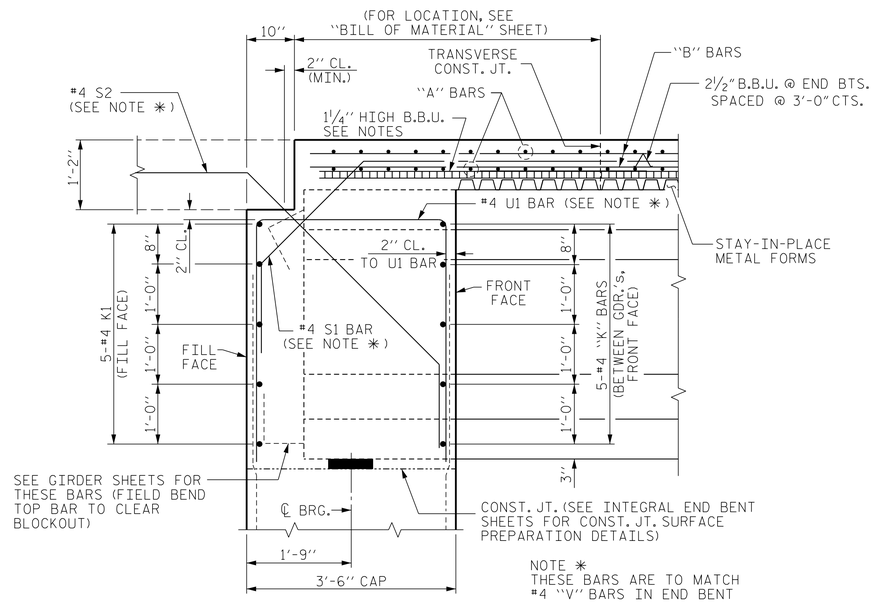

SECTION THRU INTEGRAL END BENT

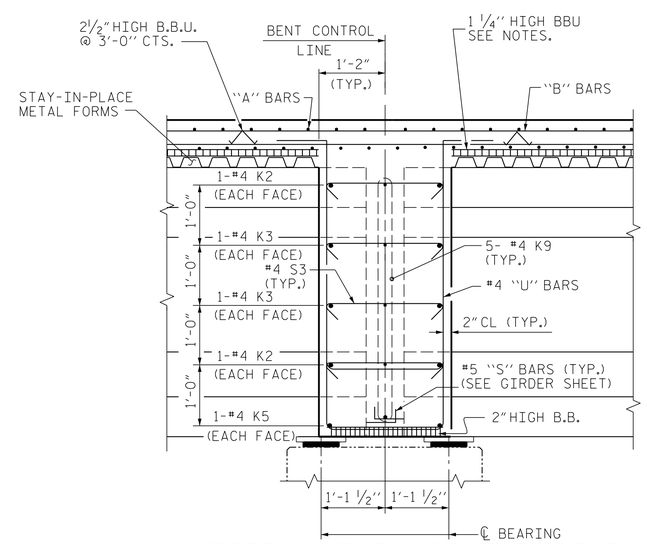

SECTION THRU BENT DIAPHRAGM

PROJECT NO. R-2582A

NORTHAMPTON COUNTY

STATION: 192+85.76 -L-

SHEET 2 OF 3

ENGINEER OF RECORD:

NORTH CAROLINA PROFESSIONAL SEAL 37400 ENGINEER GREGORY M. GRAHAM

DOCUMENT NOT CONSIDERED FINAL UNLESS ALL SIGNATURES COMPLETED

WETHERILL ENGINEERING
1223 Jones Franklin Rd.
Raleigh, N.C. 27606
Bus: 919 851 8077
Fax: 919 851 8107
LICENSE NO. F-0377

STATE OF NORTH CAROLINA
DEPARTMENT OF TRANSPORTATION
RALEIGH

SUPERSTRUCTURE

TYPICAL SECTION

(LEFT LANE)

REVISIONS						SHEET NO.
NO.	BY:	DATE:	NO.	BY:	DATE:	S3-7
1			3			TOTAL SHEETS
2			4			38

DRAWN BY : D. HODGE DATE : 10/18

CHECKED BY : T. KOCH DATE : 10/18

P:\2018\18127.02 R-2582A\Structures\Revision (Site 2)\Site 2\DGN\LEFT LANE\R2582A_SMU_ TS_650128rev.dgn
1/31/2019 10:31:56 AM

DocuSign Envelope ID: 0556690B4-FFE3-441E-B1AB-BA43025BCD9B

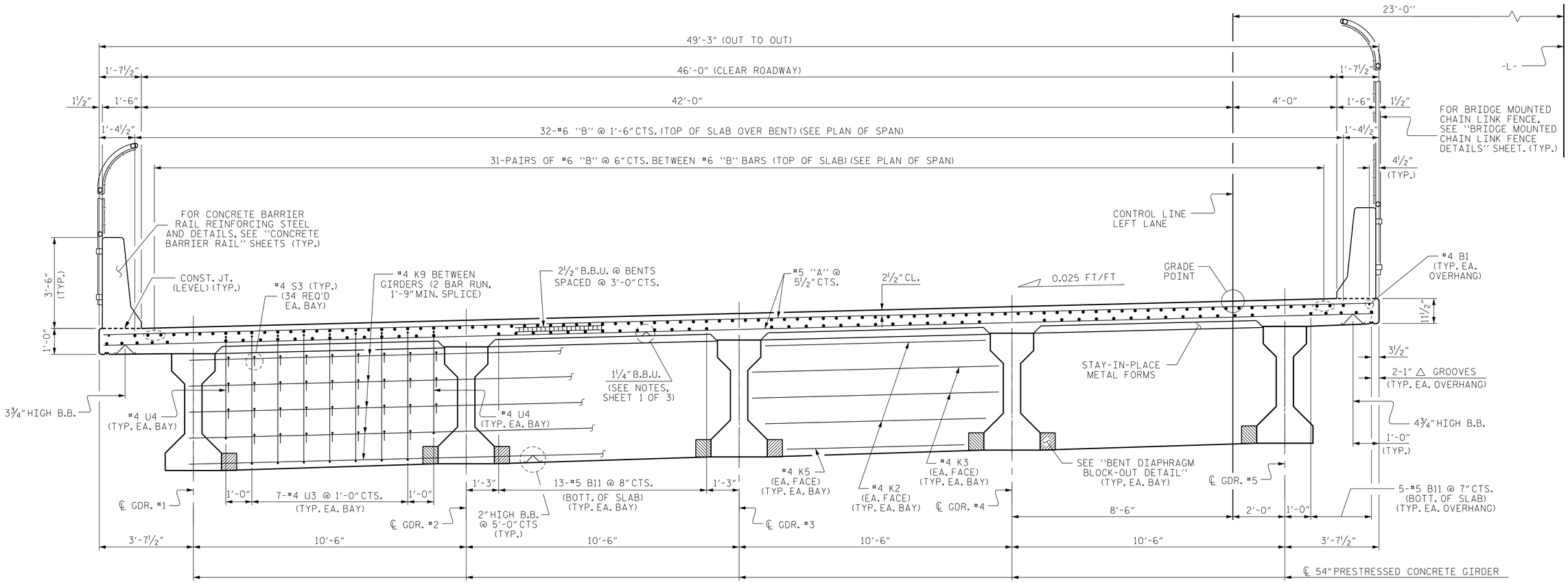

TYPICAL SECTION AT BENTS

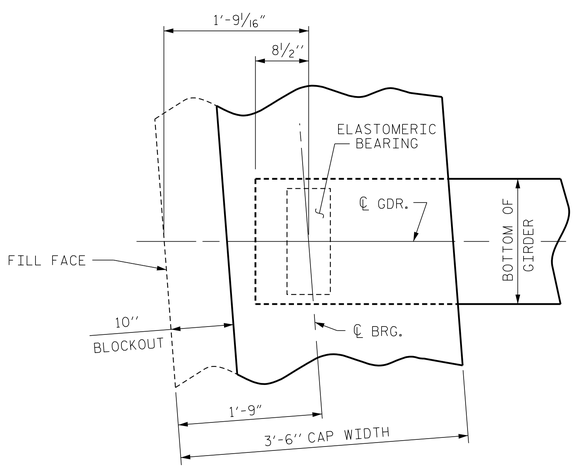

PLAN OF GIRDER @ INTEGRAL END BENT

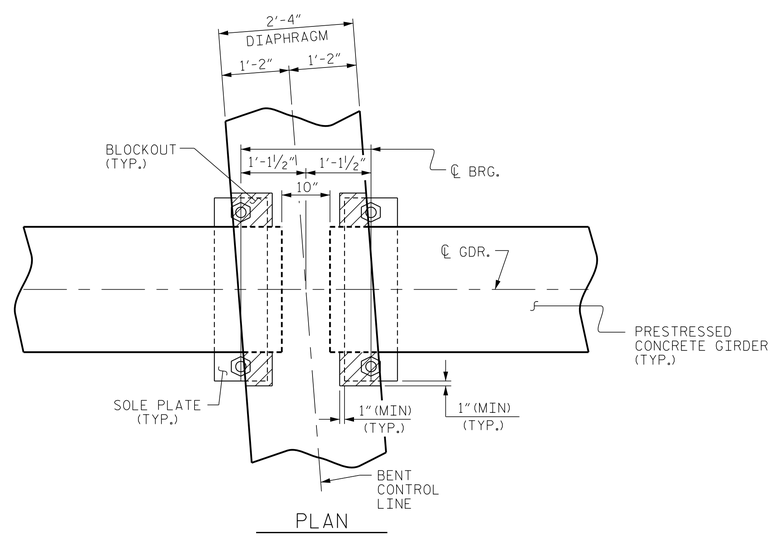

PLAN

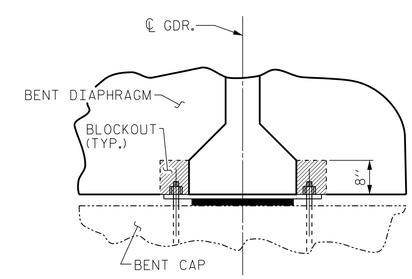

SECTION

BENT DIAPHRAGM BLOCK-OUT DETAIL

PROJECT NO. R-2582A
NORTHAMPTON COUNTY
STATION: 192+85.76 -L-

SHEET 3 OF 3

ENGINEER OF RECORD:

NORTH CAROLINA PROFESSIONAL SEAL 37400 ENGINEER GREGORY M. GILLILAND
2/1/2019

WETHERILL ENGINEERING
1223 Jones Franklin Rd.
Raleigh, N.C. 27606
Bus: 919 851 8077
Fax: 919 851 8107
LICENSE NO. F-0377

STATE OF NORTH CAROLINA
DEPARTMENT OF TRANSPORTATION
RALEIGH

SUPERSTRUCTURE
TYPICAL SECTION
(LEFT LANE)

REVISIONS						SHEET NO.
NO.	BY:	DATE:	NO.	BY:	DATE:	S3-8
1			3			TOTAL SHEETS
2			4			38

DRAWN BY : D. HODGE DATE : 10/18
CHECKED BY : T. KOCH DATE : 10/18

DOCUMENT NOT CONSIDERED FINAL UNLESS ALL SIGNATURES COMPLETED

P:\2018\18127.02_R-2582A\Structures\Revision (Site 2)\Site 2\DGN\LEFT LANE\R2582A_SMU_ TS_650128rev.dgn
1/31/2019 10:32:16 AM

DocuSign Envelope ID: 224528F0-0F95-4F76-A9C5-38258D5BEEA0

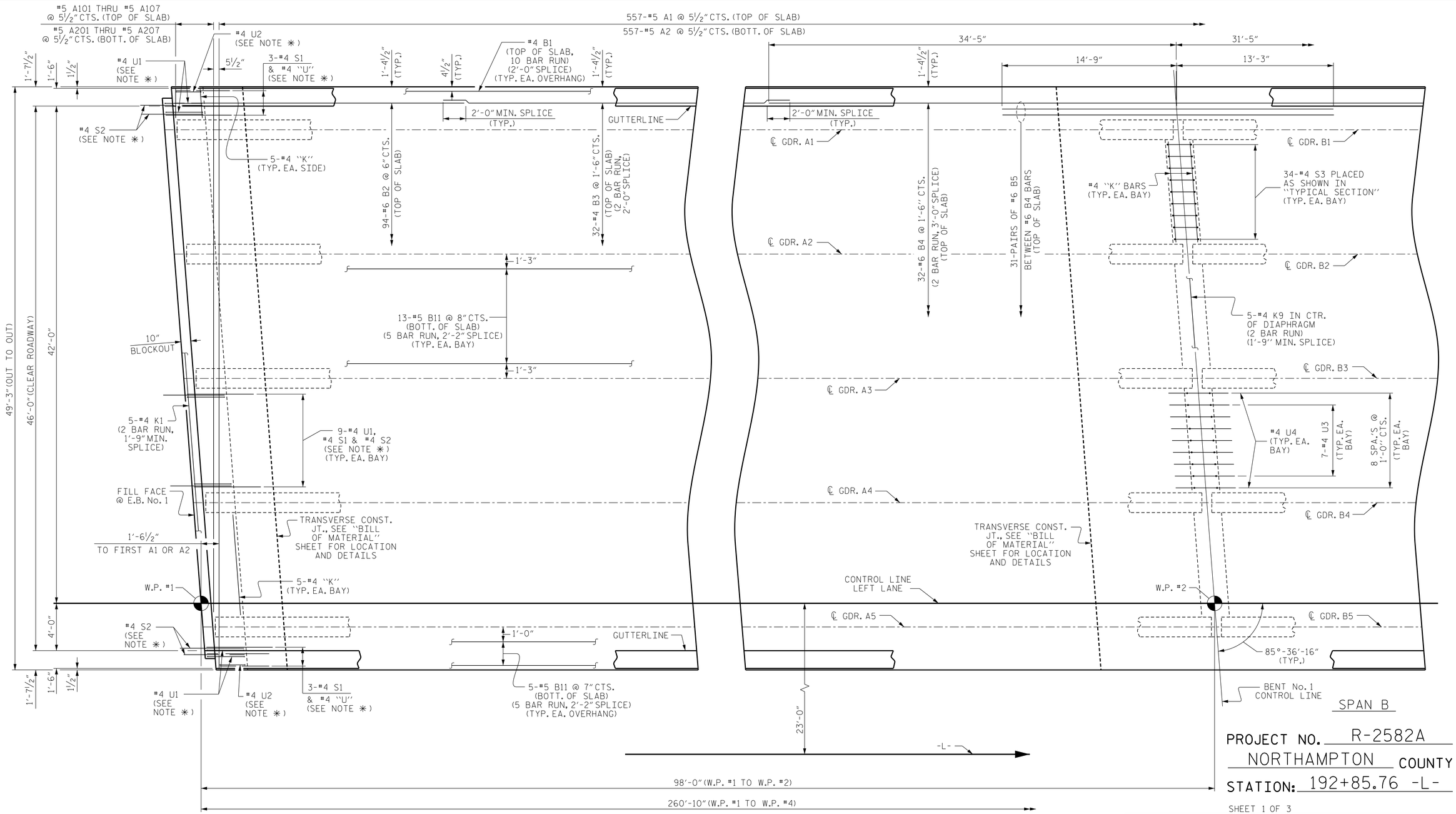

PROJECT NO. R-2582A

NORTHAMPTON COUNTY

STATION: 192+85.76 -L-

SHEET 1 OF 3

PARTIAL PLAN OF SPAN

FOR LOCATION OF INTERMEDIATE DIAPHRAGMS, SEE "FRAMING PLAN" SHEET.

FOR CONCRETE BARRIER RAIL DETAILS AND REINFORCING STEEL, SEE "CONCRETE BARRIER RAIL" SHEETS.

✳ THESE BARS ARE TO MATCH SPACING OF THE #4 "V" BARS IN END BENT.

DRAWN BY : D. HODGE DATE : 10/18

CHECKED BY : T. KOCH DATE : 10/18

DOCUMENT NOT CONSIDERED FINAL UNLESS ALL SIGNATURES COMPLETED

ENGINEER OF RECORD: 3/26/2019

NORTH CAROLINA PROFESSIONAL SEAL 37400 ENGINEER GREGORY M. GILLAND

DocuSigned by: Gregory M. Gilland

WETHERILL ENGINEERING

1223 Jones Franklin Rd.
Raleigh, N.C. 27606
Bus: 919 851 8077
Fax: 919 851 8107
LICENSE NO. F-0377

STATE OF NORTH CAROLINA
DEPARTMENT OF TRANSPORTATION
RALEIGH

SUPERSTRUCTURE

PLAN OF SPANS

(LEFT LANE)

REVISIONS								SHEET NO.
NO.	BY:	DATE:	NO.	BY:	DATE:			S3-9
1			3					TOTAL SHEETS
2			4					38

P:\2018\18127.02 R-2582A\Structures\Revision (Site 2)\Site 2\DGN\LEFT LANE\R2582A_SMU_ PS_650128rev.dgn
3/25/2019 8:03:28 AM

DocuSign Envelope ID: 0556690B4-FFE3-441E-B1AB-BA43025BCD9B

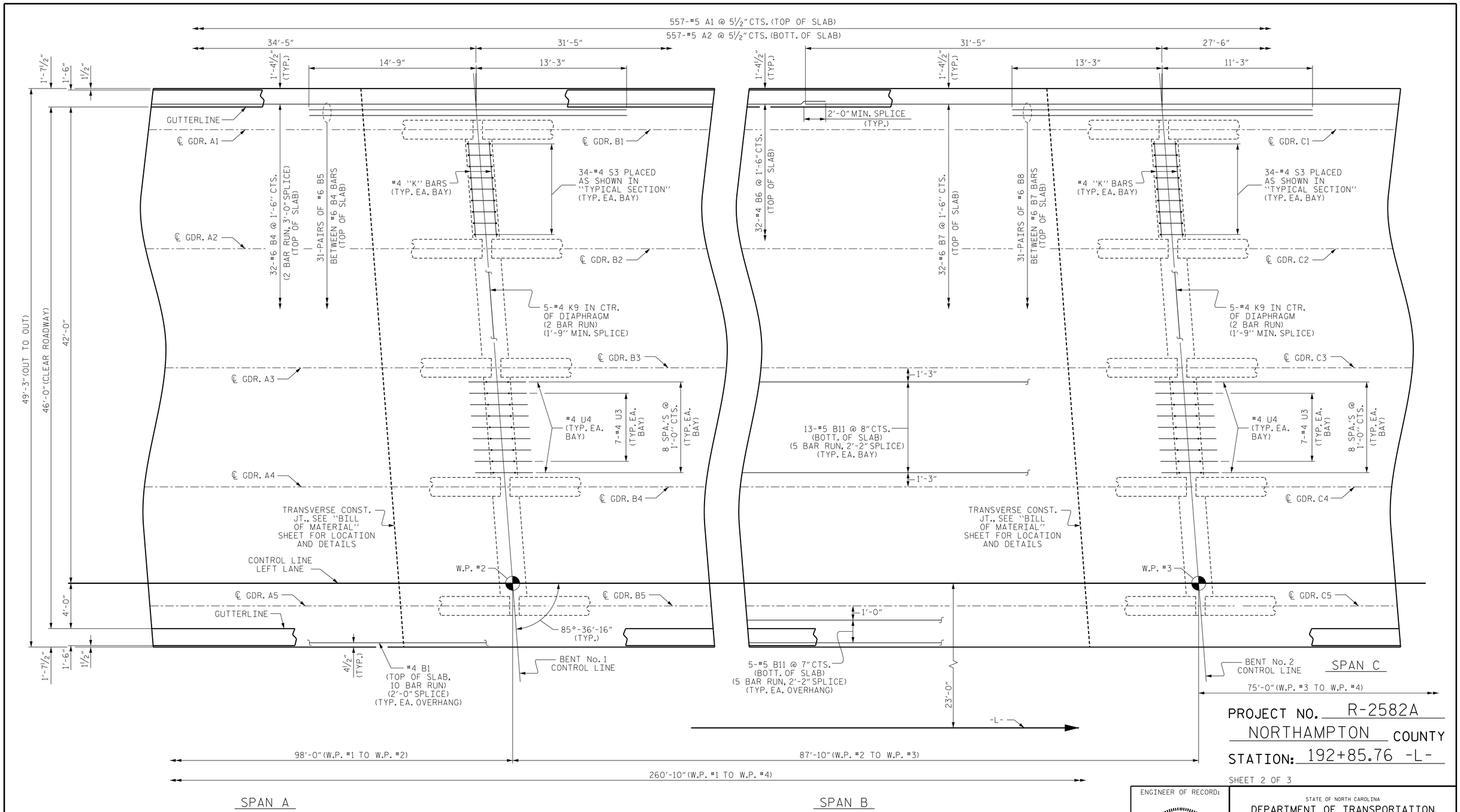

PROJECT NO. R-2582A

NORTHAMPTON COUNTY

STATION: 192+85.76 -L-

SHEET 2 OF 3

PARTIAL PLAN OF SPAN

FOR LOCATION OF INTERMEDIATE DIAPHRAGMS, SEE "FRAMING PLAN" SHEET.

FOR CONCRETE BARRIER RAIL DETAILS AND REINFORCING STEEL, SEE "CONCRETE BARRIER RAIL" SHEETS.

ENGINEER OF RECORD:

NORTH CAROLINA PROFESSIONAL SEAL 37400 ENGINEER

Gregory M. Overland

A996A9BC0E

2/1/2019

WETHERILL ENGINEERING

1223 Jones Franklin Rd.
Raleigh, N.C. 27606
Bus: 919 851 8077
Fax: 919 851 8107
LICENSE NO. F-0377

STATE OF NORTH CAROLINA
DEPARTMENT OF TRANSPORTATION
RALEIGH

SUPERSTRUCTURE

PLAN OF SPANS
(LEFT LANE)

REVISIONS							SHEET NO.
NO.	BY:	DATE:	NO.	BY:	DATE:		S3-10
1			3				TOTAL SHEETS
2			4				38

DRAWN BY : D. HODGE DATE : 10/18
CHECKED BY : T. KOCH DATE : 10/18

DOCUMENT NOT CONSIDERED FINAL UNLESS ALL SIGNATURES COMPLETED

P:\2018\18127.02_R-2582A\Structures\Revision (Site 2)\Site 2\DGN\LEFT LANE\R2582A_SMU_ PS_650128rev.dgn
1/31/2019 10:40:24 AM

DocuSign Envelope ID: 224528F0-0F95-4F76-A9C5-38258D5BEEA0

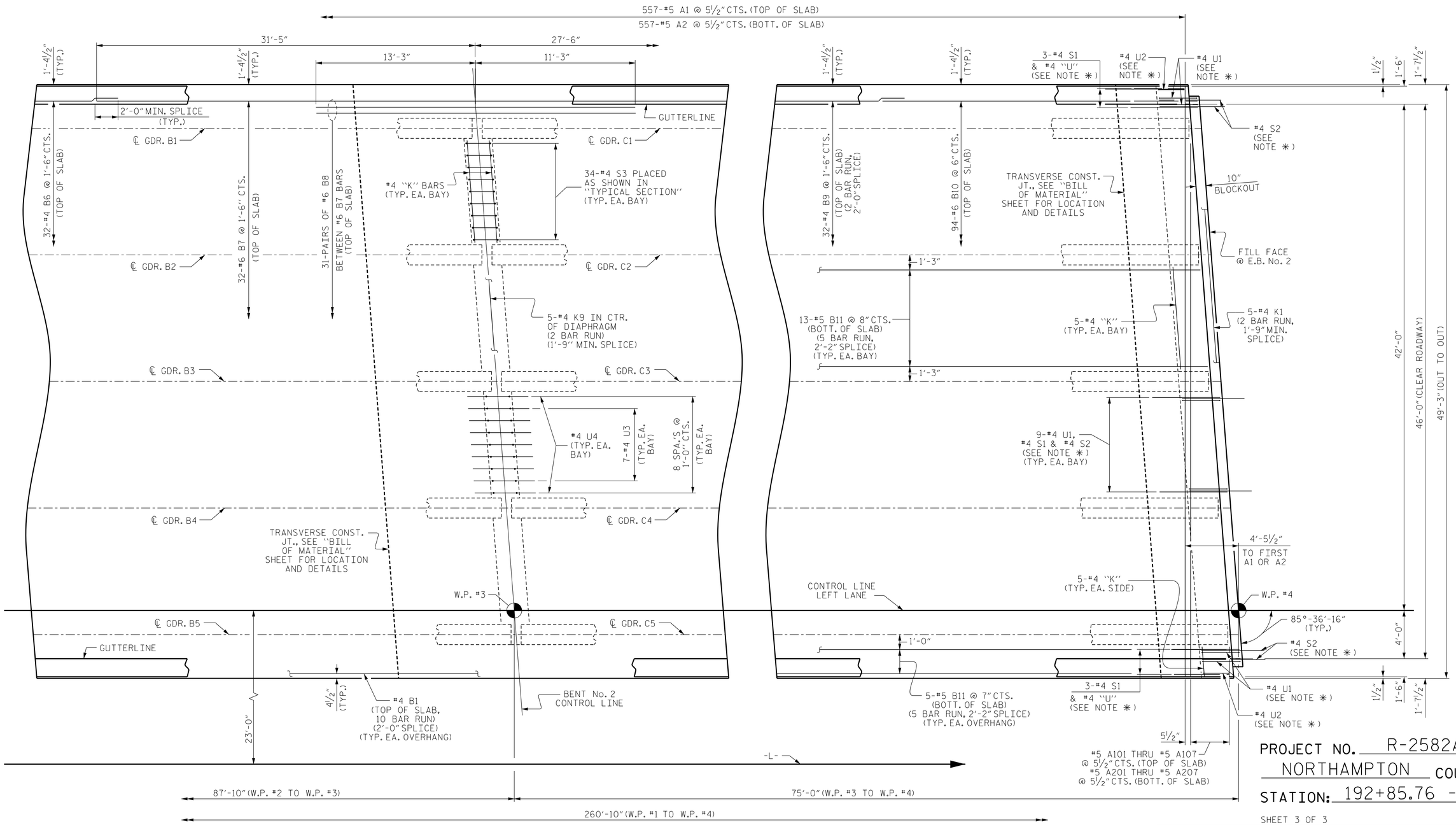

PROJECT NO. R-2582A

NORTHAMPTON COUNTY

STATION: 192+85.76 -L-

SHEET 3 OF 3

PARTIAL PLAN OF SPAN

FOR LOCATION OF INTERMEDIATE DIAPHRAGMS, SEE "FRAMING PLAN" SHEET.

FOR CONCRETE BARRIER RAIL DETAILS AND REINFORCING STEEL, SEE "CONCRETE BARRIER RAIL" SHEETS.

✳ THESE BARS ARE TO MATCH SPACING OF THE #4 "V" BARS IN END BENT.

DRAWN BY : D. HODGE DATE : 10/18

CHECKED BY : T. KOCH DATE : 10/18

DOCUMENT NOT CONSIDERED FINAL UNLESS ALL SIGNATURES COMPLETED

ENGINEER OF RECORD: 3/26/2019

NORTH CAROLINA PROFESSIONAL SEAL 37400 ENGINEER GREGORY M. GILLAND

DocuSigned by: Gregory M. Gilland A99CA9DE3324B0...

WETHERILL ENGINEERING

1223 Jones Franklin Rd.
Raleigh, N.C. 27606
Bus: 919 851 8077
Fax: 919 851 8107
LICENSE NO. F-0377

STATE OF NORTH CAROLINA
DEPARTMENT OF TRANSPORTATION
RALEIGH

SUPERSTRUCTURE

PLAN OF SPANS

(LEFT LANE)

REVISIONS						SHEET NO.
NO.	BY:	DATE:	NO.	BY:	DATE:	S3-11
1			3			TOTAL SHEETS
2			4			38

P:\2018\18127.02 R-2582A\Structures\Revision (Site 2\Site 2\DGN\LEFT LANE\R2582A_SMU_ PS_650128rev.dgn
3/25/2019 8:04:01 AM

DocuSign Envelope ID: 0556690B4-FFE3-441E-B1AB-BA43025BCD9B

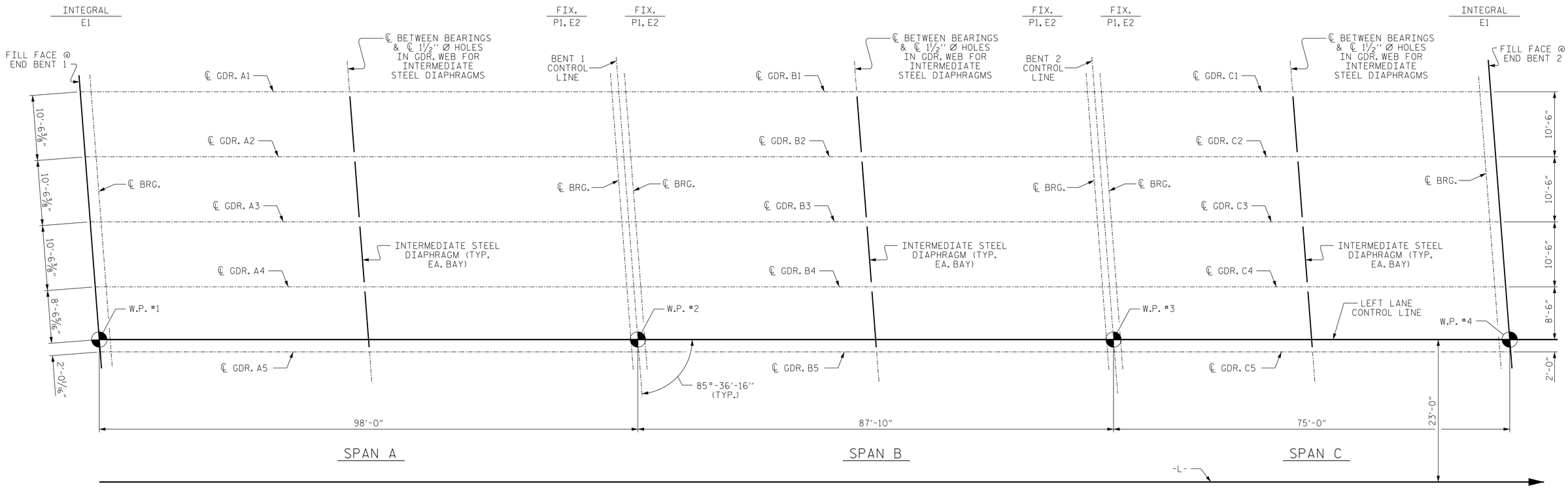

GIRDER LAYOUT

PROJECT NO. R-2582A
NORTHAMPTON COUNTY
STATION: 192+85.76 -L-

ENGINEER OF RECORD:
NORTH CAROLINA PROFESSIONAL SEAL 37400 ENGINEER
DocuSigned by: Gregory M. Gilland
2/1/2019

WETHERILL ENGINEERING
1223 Jones Franklin Rd.
Raleigh, N.C. 27606
Bus: 919 851 8077
Fax: 919 851 8107
LICENSE NO. F-0377

STATE OF NORTH CAROLINA
DEPARTMENT OF TRANSPORTATION
RALEIGH

SUPERSTRUCTURE
GIRDER LAYOUT
(LEFT LANE)

REVISIONS						SHEET NO.
NO.	BY:	DATE:	NO.	BY:	DATE:	S-12
1			3			TOTAL SHEETS
2			4			38

DRAWN BY : D. HODGE DATE : 10/18
CHECKED BY : G.M. GILLAND DATE : 11/18

DOCUMENT NOT CONSIDERED FINAL UNLESS ALL SIGNATURES COMPLETED

P:\2018\18127.02_R-2582A\Structures\Revision (Site 2)\Site 2\DGN\LEFT LANE\R2582A_SMU_ FP_650128revdgn
1/31/2019 10:45:21 AM

DocuSign Envelope ID: 0556690B4-FFE3-441E-B1AB-BA43025BCD9B

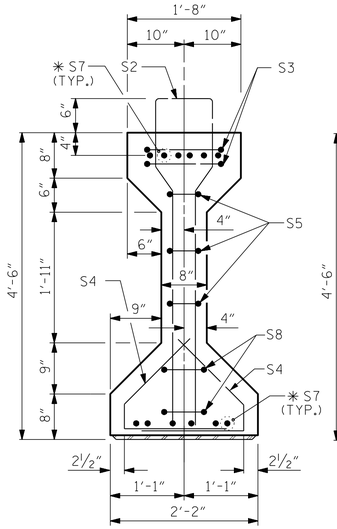

SECTION A-A

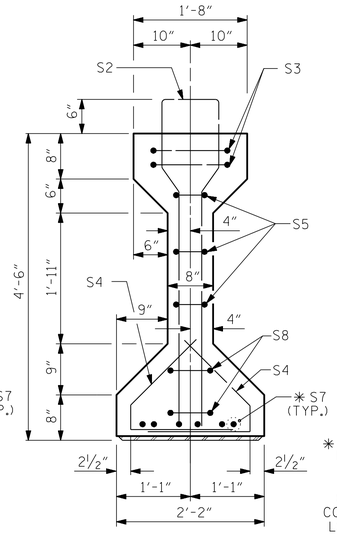

SECTION B-B

✱ FOR S7 BARS, SEE DETAIL "A" OF PRESTRESSED CONCRETE GIRDER CONTINUOUS FOR LIVE LOAD DETAILS SHEET

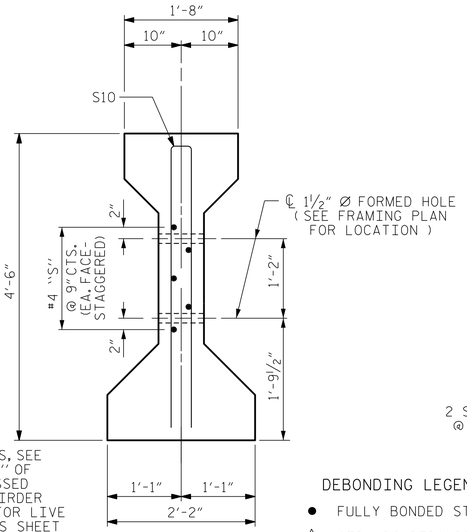

SECTION C-C

(S1 BARS NOT SHOWN)

DEBONDING LEGEND

- ● FULLY BONDED STRANDS
- ◬ STRANDS DEBONDED FOR 8'-0" FROM END OF GIRDER
- ⦿ STRANDS DEBONDED FOR 16'-0" FROM END OF GIRDER

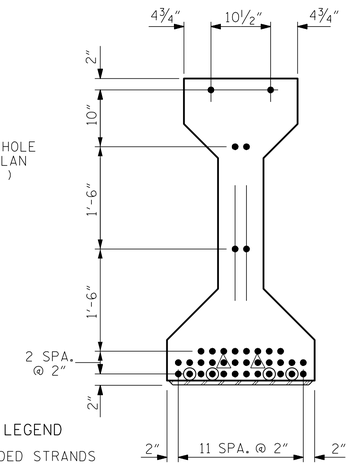

AT END OF GIRDER

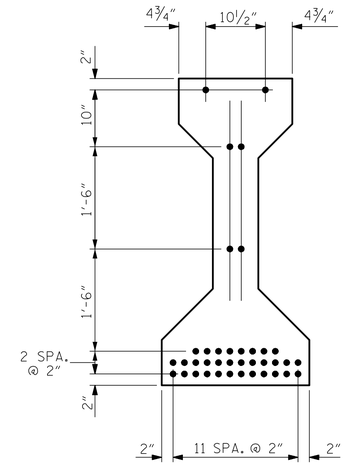

AT ℄ OF GIRDER

0.6" Ø LOW RELAXATION STRAND LAYOUT

0.6" Ø L. R. GRADE 270 STRANDS

AREA (SQUARE INCHES)	ULTIMATE STRENGTH (LBS. PER STRAND)	APPLIED PRESTRESS (LBS. PER STRAND)
0.217	58,600	43,950

REINFORCING STEEL FOR ONE GIRDER

BAR	NUMBER	SIZE	TYPE	LENGTH	WEIGHT
S1	74	#4	1	10'-8"	527
S2	14	#6	1	10'-8"	224
S3	4	#4	2	9'-1"	24
S4	68	#4	3	3'-5"	155
S5	6	#4	2	8'-5"	34
✱ S7	18	#5	STR	3'-8"	69
S8	4	#4	2	8'-7"	23
S9	2	#3	STR	1'-10"	1
S10	2	#5	2	8'-8"	18
S11	5	#4	STR	7'-0"	23
S13	1	#3	STR	1'-4"	1

✱ NOTE: S7 BARS SHALL BE BENT BEFORE SHIPMENT. HEAT BENDING SHALL NOT BE ALLOWED.

BAR TYPES

ALL BAR DIMENSIONS ARE OUT-TO-OUT

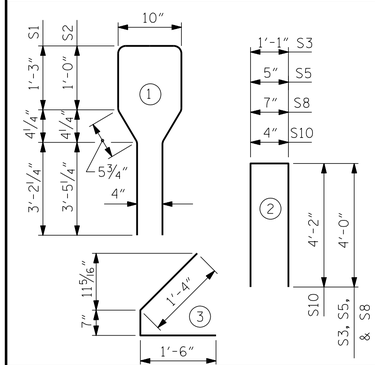

QUANTITIES FOR ONE GIRDER

	REINFORCING STEEL	9000 PSI CONCRETE	0.6" Ø L. R. STRANDS
	LB.	C.Y.	No.
	1,099	19.6	38

GIRDERS REQUIRED

NUMBER	LENGTH	TOTAL LENGTH
5	96'-6½"	482.71

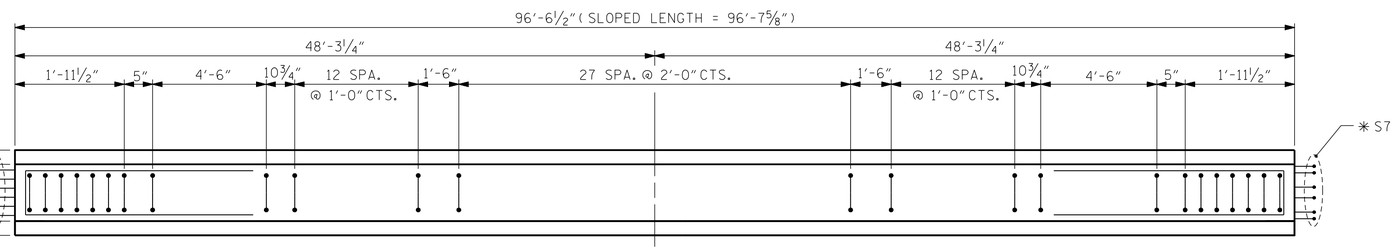

PLAN OF GIRDER

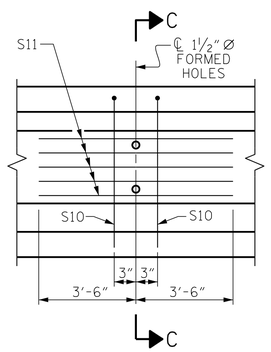

PARTIAL ELEVATION

SHOWING INTERMEDIATE DIAPHRAGM REINFORCING STEEL FOR GIRDERS

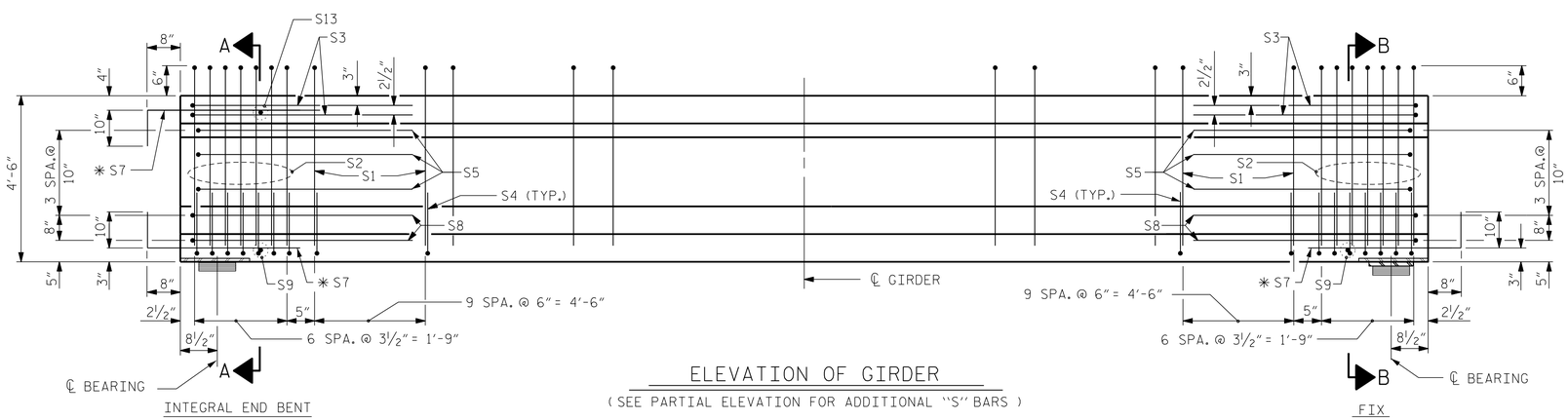

ELEVATION OF GIRDER

(SEE PARTIAL ELEVATION FOR ADDITIONAL "S" BARS)

PROJECT NO. R-2582A

NORTHAMPTON COUNTY

STATION: 192+85.76 -L-

SHEET 1 OF 5

ENGINEER OF RECORD:

NORTH CAROLINA PROFESSIONAL SEAL 37400 ENGINEER

Docu Sign Envelope ID: A096A860-E5

2/1/2019

WETHERILL ENGINEERING

1223 Jones Franklin Rd.
Raleigh, N.C. 27606
Bus: 919 851 8077
Fax: 919 851 8107
LICENSE NO. F-0377

STATE OF NORTH CAROLINA
DEPARTMENT OF TRANSPORTATION
RALEIGH

STANDARD
AASHTO TYPE IV
PRESTRESSED CONCRETE GIRDER
CONTINUOUS FOR LIVE LOAD
(LEFT LANE)
(SPAN A)

REVISIONS						SHEET NO.
NO.	BY:	DATE:	NO.	BY:	DATE:	S3-13
1			3			TOTAL SHEETS
2			4			38

DOCUMENT NOT CONSIDERED FINAL UNLESS ALL SIGNATURES COMPLETED

ASSEMBLED BY : D. HODGE	DATE : 10/18		
CHECKED BY : G.M. GILLAND	DATE : 11/18		
DRAWN BY : ELR 8/91	REV. 10/1/11	MAA/GM	
CHECKED BY : GRP 8/91	REV. 1/15	MAA/TMG	
	REV. 12/17	MAA/THC	

P:\2018\18127.02 R-2582A\Structures\Revision (Site 2\Site 2\DGN\LEFT LANE\R2582A_SMU_ PCG_650128rev.dgn
1/31/2019 10:47:29 AM

STD. NO. PCG6 (Sht. 2)

DocuSign Envelope ID: 055690B4-FFE3-441E-B1AB-BA43025BCD9B

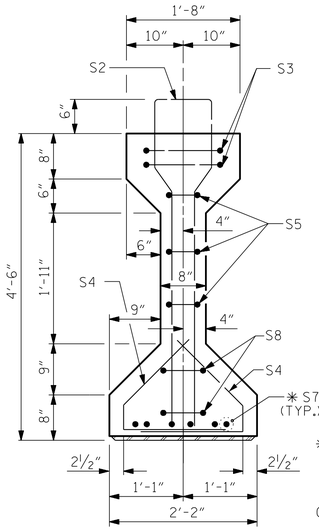

SECTION B-B

✱ FOR S7 BARS, SEE DETAIL "A" OF PRESTRESSED CONCRETE GIRDER CONTINUOUS FOR LIVE LOAD DETAILS SHEET

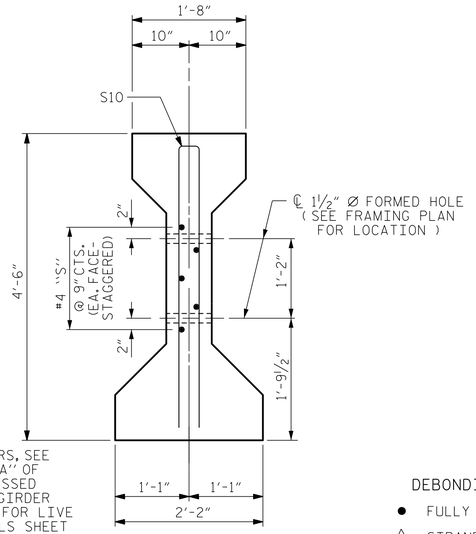

SECTION C-C

(S1 BARS NOT SHOWN)

DEBONDING LEGEND

- ● FULLY BONDED STRANDS
- ▲ STRANDS DEBONDED FOR 8'-0" FROM END OF GIRDER
- ⊙ STRANDS DEBONDED FOR 16'-0" FROM END OF GIRDER

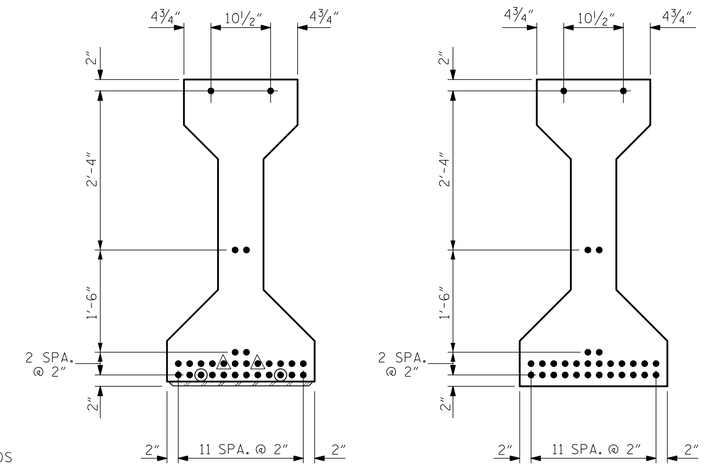

0.6" Ø LOW RELAXATION STRAND LAYOUT

0.6" Ø L. R. GRADE 270 STRANDS

AREA (SQUARE INCHES)	ULTIMATE STRENGTH (LBS. PER STRAND)	APPLIED PRESTRESS (LBS. PER STRAND)
0.217	58,600	43,950

REINFORCING STEEL FOR ONE GIRDER

BAR	NUMBER	SIZE	TYPE	LENGTH	WEIGHT
S1	72	#4	1	10'-8"	513
S2	12	#6	1	10'-8"	192
S3	4	#4	2	9'-1"	24
S4	64	#4	3	3'-5"	146
S5	6	#4	2	8'-5"	34
✱ S7	12	#5	STR	3'-8"	46
S8	4	#4	2	8'-7"	23
S9	2	#3	STR	1'-10"	1
S10	2	#5	2	8'-8"	18
S11	5	#4	STR	7'-0"	23

✱ NOTE: S7 BARS SHALL BE BENT BEFORE SHIPMENT. HEAT BENDING SHALL NOT BE ALLOWED.

BAR TYPES

ALL BAR DIMENSIONS ARE OUT-TO-OUT

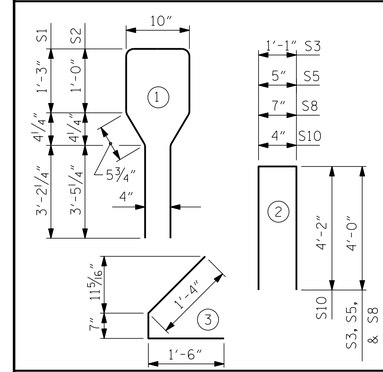

QUANTITIES FOR ONE GIRDER

	REINFORCING STEEL	7000 PSI CONCRETE	0.6" Ø L.R. STRANDS
	LB.	C.Y.	No.
	1020	17.7	30

GIRDERS REQUIRED

NUMBER	LENGTH	TOTAL LENGTH
5	87'-0"	435.00

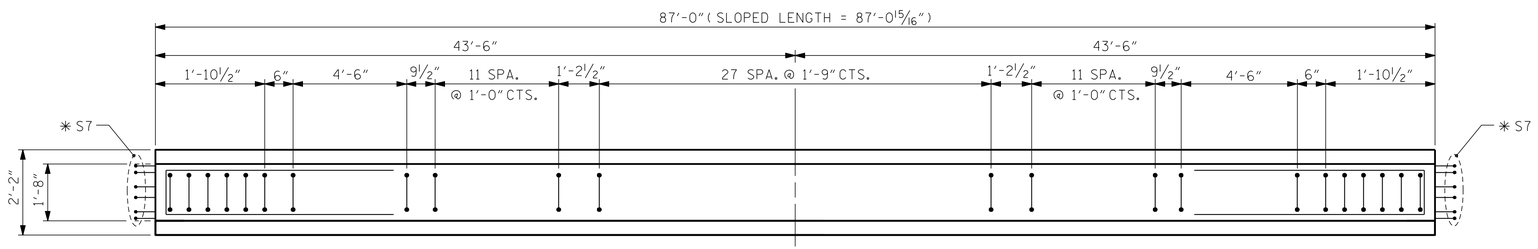

PLAN OF GIRDER

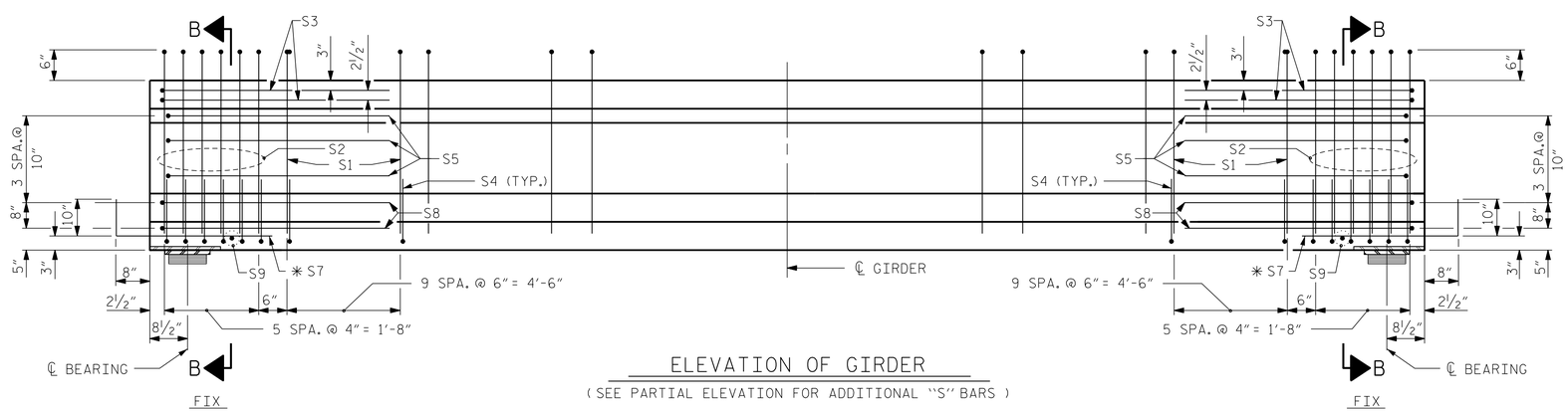

ELEVATION OF GIRDER

(SEE PARTIAL ELEVATION FOR ADDITIONAL "S" BARS)

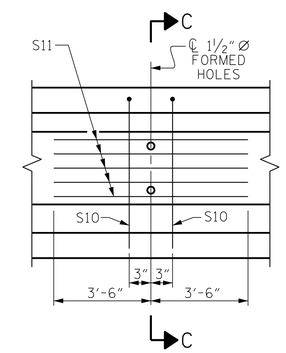

PARTIAL ELEVATION

SHOWING INTERMEDIATE DIAPHRAGM REINFORCING STEEL FOR GIRDERS

PROJECT NO. R-2582A

NORTHAMPTON COUNTY

STATION: 192+85.76 -L-

SHEET 2 OF 5

ENGINEER OF RECORD:

NORTH CAROLINA PROFESSIONAL SEAL 37400 CIVIL ENGINEER

DocuSigned by: G.M. Gilland, Jr. A996A960E5EA4A1...

2/1/2019

WETHERILL ENGINEERING

1223 Jones Franklin Rd. Raleigh, N.C. 27606 Bus: 919 851 8077 Fax: 919 851 8107 LICENSE NO. F-0377

STATE OF NORTH CAROLINA
DEPARTMENT OF TRANSPORTATION
RALEIGH

STANDARD
AASHTO TYPE IV
PRESTRESSED CONCRETE GIRDER
CONTINUOUS FOR LIVE LOAD
(LEFT LANE)
(SPAN B)

REVISIONS							SHEET NO.
NO.	BY:	DATE:	NO.	BY:	DATE:		S3-14
1			3				TOTAL SHEETS
2			4				38

DOCUMENT NOT CONSIDERED FINAL UNLESS ALL SIGNATURES COMPLETED

ASSEMBLED BY : D. HODGE	DATE : 10/18		
CHECKED BY : G.M. GILLAND	DATE : 11/18		
DRAWN BY : ELR 8/91	REV. 10/1/11	MAA/GM	
CHECKED BY : GRP 8/91	REV. 1/15	MAA/TMG	
	REV. 12/17	MAA/THC	

P:\2018\18127.02 R-2582A\Structures\Revision (Site 2)\Site 2\DGN\LEFT LANE\R2582A_SMU_ PCG_650128revdgn
1/31/2019 10:48:07 AM

STD. NO. PCG6 (Sht. 1)

DocuSign Envelope ID: 055690B4-FFE3-441E-B1AB-BA43025BCD9B

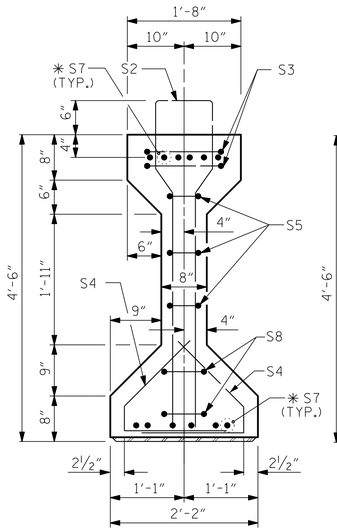

SECTION A-A

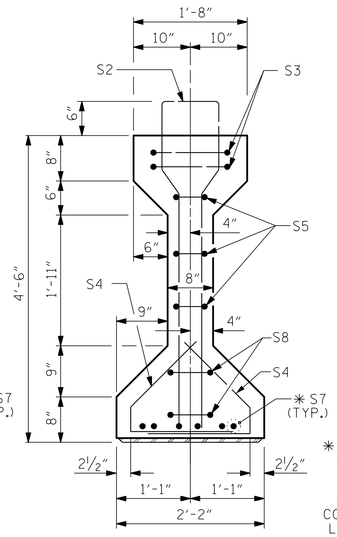

SECTION B-B

✳ FOR S7 BARS, SEE DETAIL "A" OF PRESTRESSED CONCRETE GIRDER CONTINUOUS FOR LIVE LOAD DETAILS SHEET

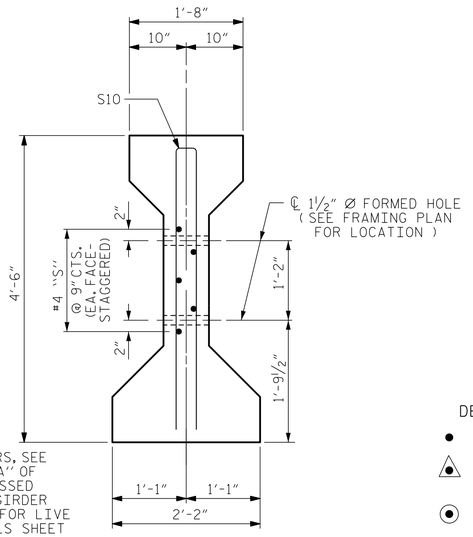

SECTION C-C

(S1 BARS NOT SHOWN)

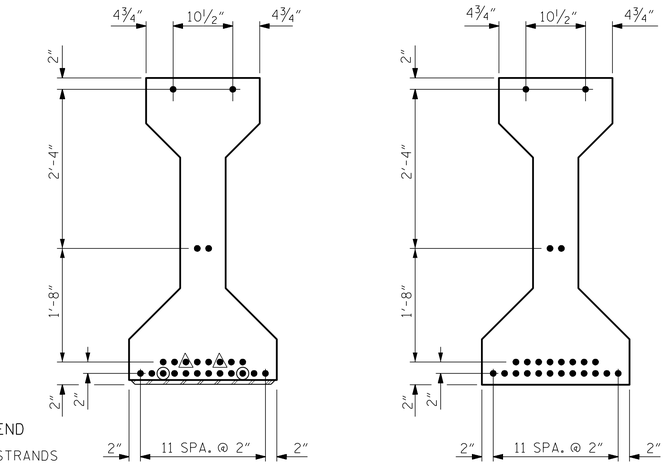

AT END OF GIRDER

AT ℄ OF GIRDER

DEBONDING LEGEND

- ● FULLY BONDED STRANDS
- △ STRANDS DEBONDED FOR 8'-0" FROM END OF GIRDER
- ⊙ STRANDS DEBONDED FOR 16'-0" FROM END OF GIRDER

0.6" Ø LOW RELAXATION STRAND LAYOUT

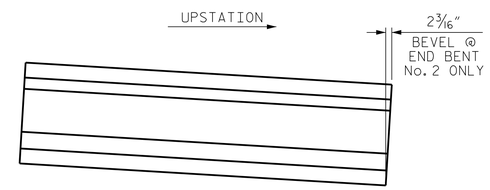

ELEVATION

SHOWING BEVELED END OF GIRDERS

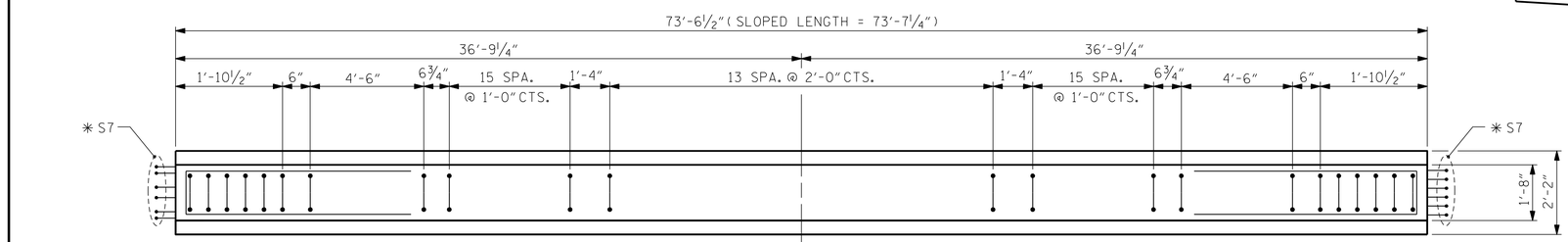

PLAN OF GIRDER

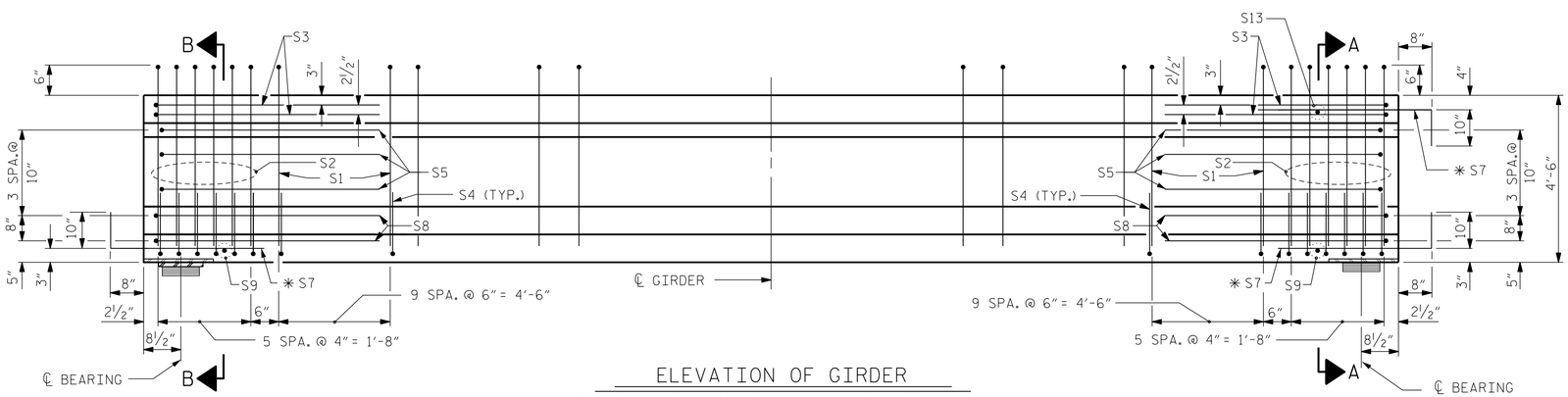

ELEVATION OF GIRDER

(SEE PARTIAL ELEVATION FOR ADDITIONAL "S" BARS)

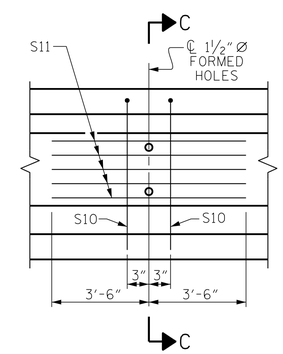

PARTIAL ELEVATION

SHOWING INTERMEDIATE DIAPHRAGM REINFORCING STEEL FOR GIRDERS

0.6" Ø L. R. GRADE 270 STRANDS

AREA (SQUARE INCHES)	ULTIMATE STRENGTH (LBS. PER STRAND)	APPLIED PRESTRESS (LBS. PER STRAND)
0.217	58,600	43,950

REINFORCING STEEL FOR ONE GIRDER

BAR	NUMBER	SIZE	TYPE	LENGTH	WEIGHT
S1	66	#4	1	10'-8"	470
S2	12	#6	1	10'-8"	192
S3	4	#4	2	9'-1"	24
S4	64	#4	3	3'-5"	146
S5	6	#4	2	8'-5"	34
✳ S7	18	#5	STR	3'-8"	69
S8	4	#4	2	8'-7"	23
S9	2	#3	STR	1'-10"	1
S10	2	#5	2	8'-8"	18
S11	5	#4	STR	7'-0"	23
S13	1	#3	STR	1'-4"	1

✳ NOTE: S7 BARS SHALL BE BENT BEFORE SHIPMENT. HEAT BENDING SHALL NOT BE ALLOWED.

BAR TYPES

ALL BAR DIMENSIONS ARE OUT-TO-OUT

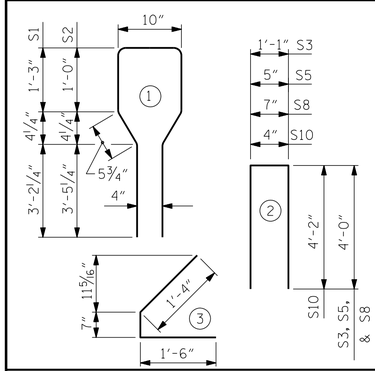

QUANTITIES FOR ONE GIRDER

	REINFORCING STEEL	5000 PSI CONCRETE	0.6" Ø L.R. STRANDS
	LB.	C.Y.	No.
	1,001	14.9	24

GIRDERS REQUIRED

NUMBER	LENGTH	TOTAL LENGTH
5	73'-6½"	367.71

PROJECT NO. R-2582A

NORTHAMPTON COUNTY

STATION: 192+85.76 -L-

SHEET 3 OF 5

ENGINEER OF RECORD:

NORTH CAROLINA PROFESSIONAL SEAL 37400 ENGINEER GREGORY M. GILLAND

2/1/2019

WETHERILL ENGINEERING

1223 Jones Franklin Rd.
Raleigh, N.C. 27606
Bus: 919 851 8077
Fax: 919 851 8107
LICENSE NO. F-0377

STATE OF NORTH CAROLINA
DEPARTMENT OF TRANSPORTATION
RALEIGH

STANDARD
AASHTO TYPE IV
PRESTRESSED CONCRETE GIRDER
CONTINUOUS FOR LIVE LOAD
(LEFT LANE)
(SPAN C)

REVISIONS						SHEET NO.
NO.	BY:	DATE:	NO.	BY:	DATE:	S3-15
1			3			TOTAL SHEETS
2			4			38

DOCUMENT NOT CONSIDERED FINAL UNLESS ALL SIGNATURES COMPLETED

ASSEMBLED BY : D. HODGE	DATE : 10/18		
CHECKED BY : G.M. GILLAND	DATE : 11/18		
DRAWN BY : ELR 8/91	REV. 10/1/11	MAA/GM	
CHECKED BY : GRP 8/91	REV. 1/15	MAA/TMG	
	REV. 12/17	MAA/THC	

P:\2018\18127.02 R-2582A\Structures\Revision (Site 2)\Site 2\DGN\LEFT LANE\R2582A_SMU_ PCG_650128revdgn
1/31/2019 10:48:55 AM

STD. NO. PCG6 (Sht. 2)

DocuSign Envelope ID: 055690B4-FFE3-441E-B1AB-BA43025BCD9B

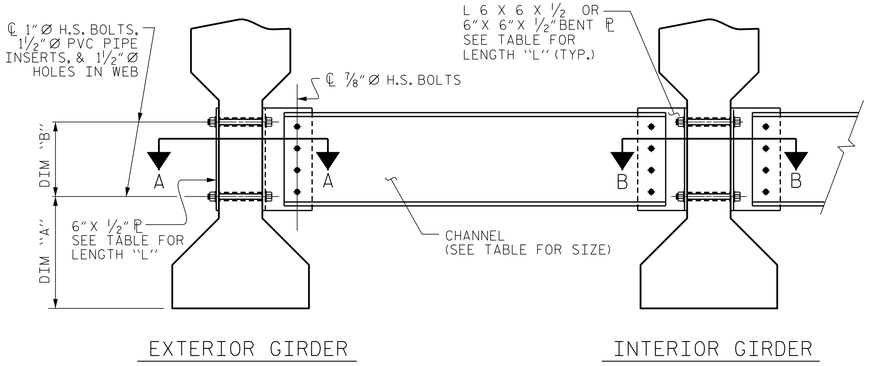

PART SECTION AT INTERMEDIATE DIAPHRAGM

(TYPE IV GIRDER SHOWN)

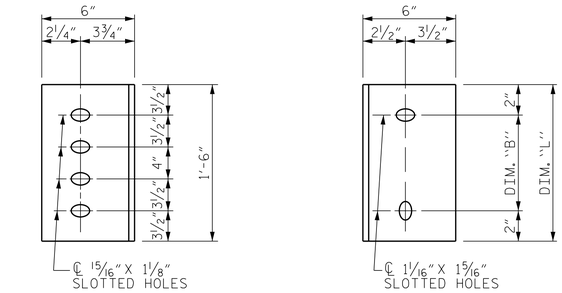

DIAPHRAGM FACE

(TYPE IV GDR.)

WEB FACE

CONNECTOR PLATE DETAILS

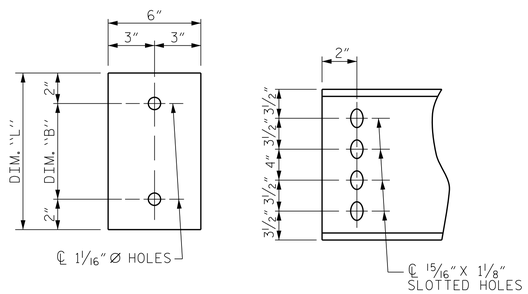

PLATE DETAILS

CHANNEL END

(TYPE IV GDR.)

STRUCTURAL STEEL NOTES

ALL INTERMEDIATE DIAPHRAGM STEEL AND CONNECTOR PLATES SHALL BE AASHTO M270 GRADE 50 OR APPROVED EQUAL.

TENSION ON THE ASTM A325 BOLTS THROUGH THE CHANNEL MEMBER SHALL BE CALIBRATED USING DIRECT TENSION INDICATOR WASHERS IN ACCORDANCE WITH THE STANDARD SPECIFICATIONS.

TENSION ON THE ASTM A449 BOLTS THROUGH THE GIRDER WEB SHALL BE SNUG TIGHTENED FOLLOWED BY AN ADDITIONAL ¼ TURN.

THE PLATES, BENT PLATES, CHANNELS, AND ANGLES SHALL BE GALVANIZED OR METALLIZED IN ACCORDANCE WITH THE STANDARD SPECIFICATIONS. FOR THERMAL SPRAYED COATINGS (METALLIZATION), SEE SPECIAL PROVISIONS.

FOR METALLIZATION, APPLY A THERMAL SPRAYED COATING WITH A SEAL COAT TO ALL STEEL DIAPHRAGM SURFACES IN ACCORDANCE WITH THE DEPARTMENTS THERMAL SPRAYED COATINGS (METALLIZATION) PROGRAM, THERMAL SPRAYED COATINGS SPECIAL PROVISION AND SECTION 442 OF THE STANDARD SPECIFICATIONS.

GALVANIZE THE HIGH STRENGTH BOLTS, NUTS, WASHERS AND DIRECT TENSION INDICATORS IN ACCORDANCE WITH THE STANDARD SPECIFICATIONS.

USE AN ASTM F436 HARDENED WASHER WITH STANDARD AND SLOTTED HOLES UNDER EACH BOLT HEAD AND NUT.

FOR BOLTS THROUGH THE GIRDER WEB, PROVIDE SUFFICIENT LENGTH OF THREADS ON ALL BOLTS TO ACCOMMODATE WASHERS AND THE THICKNESS OF CONNECTING MEMBER PLUS AT LEAST ¼" PROJECTION BEYOND THE NUT.

INTERMEDIATE DIAPHRAGM ASSEMBLY SHALL COMPLY WITH SECTION 1072 OF THE STANDARD SPECIFICATIONS.

SUBMIT TWO SETS OF WORKING DRAWINGS FOR THE INTERMEDIATE DIAPHRAGM ASSEMBLY FOR REVIEW, COMMENTS AND ACCEPTANCE. AFTER REVIEW, COMMENTS, AND ACCEPTANCE, SUBMIT SEVEN SETS FOR DISTRIBUTION.

IN THE EXTERIOR BAYS, PLACE TEMPORARY STRUTS BETWEEN PRESTRESSED GIRDERS ADJACENT TO THE STEEL DIAPHRAGMS. STRUTS SHALL REMAIN IN PLACE 3 DAYS AFTER CONCRETE IS PLACED.

THE COST OF THE STEEL DIAPHRAGMS AND ASSEMBLIES SHALL BE INCLUDED IN THE UNIT PRICE BID FOR PRESTRESSED CONCRETE GIRDERS.

TABLE

GIRDER TYPE	CHANNEL SIZE	DIM "A"	DIM "B"	DIM "L"
IV	MC 18 x 42.7	1'-9½"	1'-2"	1'-6"

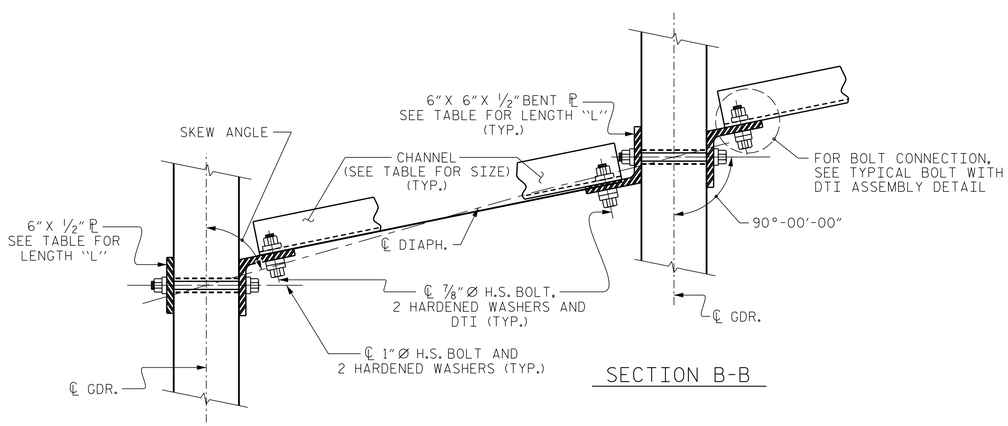

SECTION B-B

SECTION A-A

CONNECTION DETAILS

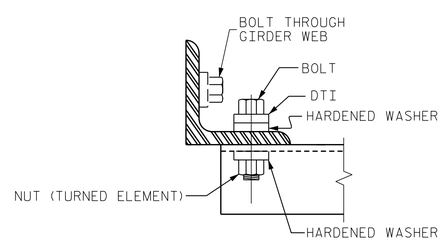

BOLT WITH DTI ASSEMBLY DETAIL

PROJECT NO. R-2582A

NORTHAMPTON COUNTY

STATION: 192+85.76 -L-

SHEET 4 OF 5

ENGINEER OF RECORD:

NORTH CAROLINA PROFESSIONAL SEAL 37400 ENGINEER

2/1/2019

WETHERILL ENGINEERING

1223 Jones Franklin Rd.
Raleigh, N.C. 27606
Bus: 919 851 8077
Fax: 919 851 8107
LICENSE NO. F-0377

STATE OF NORTH CAROLINA
DEPARTMENT OF TRANSPORTATION
RALEIGH

STANDARD
INTERMEDIATE
STEEL DIAPHRAGMS
FOR TYPE IV PRESTRESSED
CONCRETE GIRDERS
(LEFT LANE)

REVISIONS						SHEET NO.
NO.	BY:	DATE:	NO.	BY:	DATE:	S3-16
1			3			TOTAL SHEETS
2			4			38

ASSEMBLED BY : D. HODGE DATE : 10/18
CHECKED BY : G.M. GILLAND DATE : 11/18

DRAWN BY : TLA 6/05
CHECKED BY : VC 6/05

REV. 5/1/06 RRR KMM/GM
REV. 10/1/11 MAA/GM
REV. 12/17 MAA/THC

DOCUMENT NOT CONSIDERED FINAL UNLESS ALL SIGNATURES COMPLETED

STD. NO. PCG10 (SHT 2)

P:\2018\18127.02 R-2582A\Structures\Revision (Site 2\Site 2\DGN\LEFT LANE\R2582A_SMU_ PCG_650128rev.dgn
1/31/2019 10:49:20 AM

DocuSign Envelope ID: 055690B4-FFE3-441E-B1AB-BA43025BCD9B

DEAD LOAD DEFLECTION TABLE FOR GIRDERS

0.6"Ø LOW RELAXATION	SPAN A GIRDERS #1 & #5										
TENTH POINTS	0	.1	.2	.3	.4	.5	.6	.7	.8	.9	0
CAMBER (GIRDER ALONE IN PLACE) ↑	0.000	0.057	0.109	0.149	0.174	0.183	0.174	0.149	0.109	0.057	0.000
✳ DEFLECTION DUE TO SUPERIMPOSED D.L. ↓	0.000	0.046	0.090	0.125	0.147	0.154	0.147	0.125	0.090	0.046	0.000
FINAL CAMBER ↑	0	1/8"	1/4"	5/16"	5/16"	3/8"	5/16"	5/16"	1/4"	1/8"	0

✳ INCLUDES FUTURE WEARING SURFACE
ALL VALUES ARE SHOWN IN FEET (DECIMAL FORM), EXCEPT "FINAL CAMBER", WHICH IS GIVEN IN INCHES (FRACTION FORM).

DEAD LOAD DEFLECTION TABLE FOR GIRDERS

0.6"Ø LOW RELAXATION	SPAN A GIRDERS #2, #3 & #4										
TENTH POINTS	0	.1	.2	.3	.4	.5	.6	.7	.8	.9	0
CAMBER (GIRDER ALONE IN PLACE) ↑	0.000	0.057	0.109	0.149	0.174	0.183	0.174	0.149	0.109	0.057	0.000
✳ DEFLECTION DUE TO SUPERIMPOSED D.L. ↓	0.000	0.049	0.097	0.134	0.158	0.166	0.158	0.134	0.097	0.049	0.000
FINAL CAMBER ↑	0	1/8"	1/8"	3/16"	3/16"	3/16"	3/16"	3/16"	1/8"	1/8"	0

✳ INCLUDES FUTURE WEARING SURFACE
ALL VALUES ARE SHOWN IN FEET (DECIMAL FORM), EXCEPT "FINAL CAMBER", WHICH IS GIVEN IN INCHES (FRACTION FORM).

DEAD LOAD DEFLECTION TABLE FOR GIRDERS

0.6"Ø LOW RELAXATION	SPAN B GIRDERS #1 & #5										
TENTH POINTS	0	.1	.2	.3	.4	.5	.6	.7	.8	.9	0
CAMBER (GIRDER ALONE IN PLACE) ↑	0.000	0.050	0.095	0.130	0.153	0.160	0.153	0.130	0.095	0.050	0.000
✳ DEFLECTION DUE TO SUPERIMPOSED D.L. ↓	0.000	0.032	0.064	0.088	0.104	0.109	0.104	0.088	0.064	0.032	0.000
FINAL CAMBER ↑	0	1/4"	3/8"	1/2"	9/16"	5/8"	9/16"	1/2"	3/8"	1/4"	0

✳ INCLUDES FUTURE WEARING SURFACE
ALL VALUES ARE SHOWN IN FEET (DECIMAL FORM), EXCEPT "FINAL CAMBER", WHICH IS GIVEN IN INCHES (FRACTION FORM).

DEAD LOAD DEFLECTION TABLE FOR GIRDERS

0.6"Ø LOW RELAXATION	SPAN B GIRDERS #2, #3 & #4										
TENTH POINTS	0	.1	.2	.3	.4	.5	.6	.7	.8	.9	0
CAMBER (GIRDER ALONE IN PLACE) ↑	0.000	0.050	0.095	0.130	0.153	0.160	0.153	0.130	0.095	0.050	0.000
✳ DEFLECTION DUE TO SUPERIMPOSED D.L. ↓	0.000	0.035	0.070	0.097	0.114	0.120	0.114	0.097	0.070	0.035	0.000
FINAL CAMBER ↑	0	3/16"	5/16"	3/8"	7/16"	1/2"	7/16"	3/8"	5/16"	3/16"	0

✳ INCLUDES FUTURE WEARING SURFACE
ALL VALUES ARE SHOWN IN FEET (DECIMAL FORM), EXCEPT "FINAL CAMBER", WHICH IS GIVEN IN INCHES (FRACTION FORM).

DEAD LOAD DEFLECTION TABLE FOR GIRDERS

0.6"Ø LOW RELAXATION	SPAN C GIRDERS #1 & #5										
TENTH POINTS	0	.1	.2	.3	.4	.5	.6	.7	.8	.9	0
CAMBER (GIRDER ALONE IN PLACE) ↑	0.000	0.034	0.064	0.088	0.103	0.108	0.103	0.088	0.064	0.034	0.000
✳ DEFLECTION DUE TO SUPERIMPOSED D.L. ↓	0.000	0.018	0.036	0.049	0.058	0.062	0.058	0.049	0.036	0.018	0.000
FINAL CAMBER ↑	0	3/16"	5/16"	7/16"	9/16"	9/16"	9/16"	7/16"	5/16"	3/16"	0

✳ INCLUDES FUTURE WEARING SURFACE
ALL VALUES ARE SHOWN IN FEET (DECIMAL FORM), EXCEPT "FINAL CAMBER", WHICH IS GIVEN IN INCHES (FRACTION FORM).

DEAD LOAD DEFLECTION TABLE FOR GIRDERS

0.6"Ø LOW RELAXATION	SPAN C GIRDERS #2, #3 & #4										
TENTH POINTS	0	.1	.2	.3	.4	.5	.6	.7	.8	.9	0
CAMBER (GIRDER ALONE IN PLACE) ↑	0.000	0.034	0.064	0.088	0.103	0.108	0.103	0.088	0.064	0.034	0.000
✳ DEFLECTION DUE TO SUPERIMPOSED D.L. ↓	0.000	0.019	0.038	0.053	0.063	0.066	0.063	0.053	0.038	0.019	0.000
FINAL CAMBER ↑	0	3/16"	5/16"	7/16"	1/2"	1/2"	1/2"	7/16"	5/16"	3/16"	0

✳ INCLUDES FUTURE WEARING SURFACE
ALL VALUES ARE SHOWN IN FEET (DECIMAL FORM), EXCEPT "FINAL CAMBER", WHICH IS GIVEN IN INCHES (FRACTION FORM).

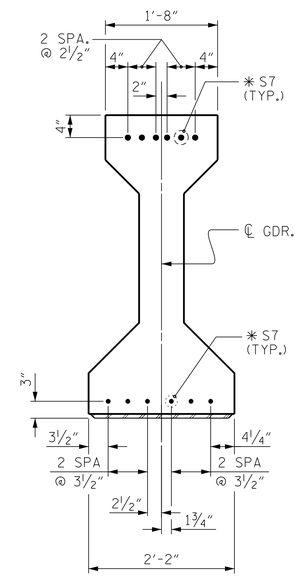

DETAIL "A"
(FOR AASHTO TYPE IV GIRDERS)

NOTES

ALL PRESTRESSING STRANDS SHALL BE 7-WIRE LOW-RELAXATION GRADE 270 STRANDS AND SHALL CONFORM TO AASHTO M203 EXCEPT FOR SAMPLING REQUIREMENTS WHICH SHALL BE IN ACCORDANCE WITH THE STANDARD SPECIFICATIONS.

ALL REINFORCING STEEL SHALL BE GRADE 60.

EMBEDDED PLATE "B-1" SHALL BE GALVANIZED IN ACCORDANCE WITH THE STANDARD SPECIFICATIONS.

ANCHOR STUDS SHALL CONFORM TO AASHTO M169 GRADES 1010 THROUGH 1020 OR APPROVED EQUAL, AND SHALL MEET THE TYPE "B" REQUIREMENTS OF SUBSECTION 7.3 OF THE ANSI/AASHTO/AWS D1.5 BRIDGE WELDING CODE.

AT ENDS OF GIRDERS TO BE EMBEDDED IN CONCRETE DIAPHRAGMS OR END WALLS, PRESTRESSING STRANDS MAY EXTEND A MAXIMUM OF 2" BEYOND THE GIRDER ENDS. OTHERWISE, PRESTRESSING STRANDS SHALL BE CUT FLUSH WITH THE GIRDER ENDS.

THE TRANSFER OF LOAD FROM THE ANCHORAGES TO THE GIRDER SHALL BE DONE WHEN CONCRETE HAS REACHED A COMPRESSIVE STRENGTH OF NOT LESS THAN 7,000 PSI FOR SPAN A, 5,500 PSI FOR SPAN B AND 4,000 PSI FOR SPAN C.

DEPENDING ON THE TYPE OF SYSTEM USED TO SUPPORT THE DECK SLAB FORMS, PRESET ANCHORS MAY BE NECESSARY IN THE PRESTRESSED CONCRETE GIRDER.

THE TOP SURFACE OF THE GIRDER, EXCLUDING THE OUTSIDE 4", SHALL BE RAKED TO A DEPTH OF 1/4".

THE CONTRACTOR HAS THE OPTION TO PROVIDE, AT NO ADDITIONAL COST TO THE DEPARTMENT, 2 ADDITIONAL STRANDS AT THE TOP OF THE GIRDER TO FACILITATE TYING OF THE REINFORCING STEEL. THESE STRANDS SHALL BE PULLED TO A LOAD OF 4500 lbs.

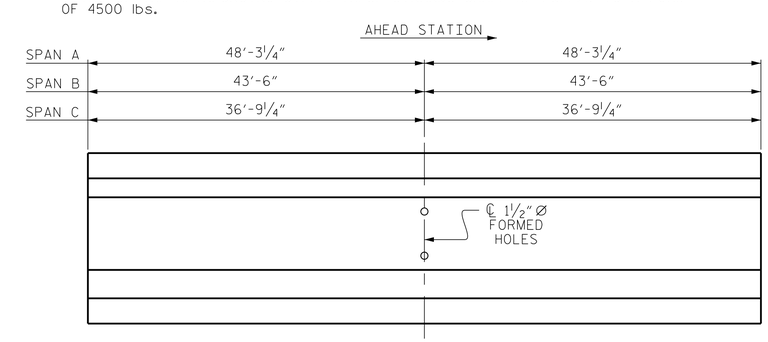

LOCATION OF BOLT HOLES IN GIRDERS

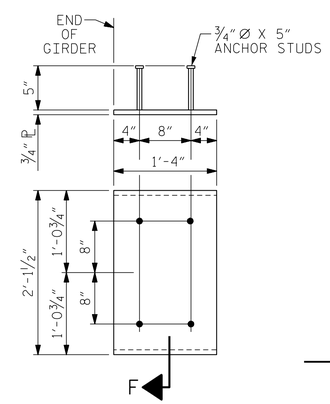

EMBEDDED PLATE "B-1" DETAILS FOR AASHTO TYPE IV GIRDER
(2 REQ'D PER GIRDER)

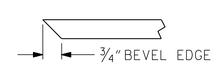

SECTION "F"
(SEE NOTES)

PROJECT NO. R-2582A
NORTHAMPTON COUNTY
STATION: 192+85.76 -L-

SHEET 5 OF 5

ENGINEER OF RECORD:
NORTH CAROLINA PROFESSIONAL SEAL 37400 ENGINEER
2/1/2019
WETHERILL ENGINEERING
1223 Jones Franklin Rd.
Raleigh, N.C. 27606
Bus: 919 851 8077
Fax: 919 851 8107
LICENSE NO. F-0377

STATE OF NORTH CAROLINA
DEPARTMENT OF TRANSPORTATION
RALEIGH

STANDARD
PRESTRESSED CONCRETE GIRDER CONTINUOUS FOR LIVE LOAD DETAILS
(LEFT LANE)

REVISIONS						SHEET NO.
NO.	BY:	DATE:	NO.	BY:	DATE:	S3-17
1			3			TOTAL SHEETS
2			4			38

DOCUMENT NOT CONSIDERED FINAL UNLESS ALL SIGNATURES COMPLETED

ASSEMBLED BY : D. HODGE		DATE :	10/18
CHECKED BY : G.M. GILLAND		DATE :	11/18
DRAWN BY : ELR 11/91	REV. 1/15		MAA/TMC
CHECKED BY : GRP 11/91	REV. 2/15		MAA/TMC
	REV. 12/17		MAA/THC

P:\2018\18127.02 R-2582A\Structures\Revision (Site 2)\Site 2\DGN\LEFT LANE\R2582A_SMU_ PCG_650128rev.dgn
1/31/2019 10:50:03 AM

DocuSign Envelope ID: 055690B4-FFE3-441E-B1AB-BA43025BCD9B

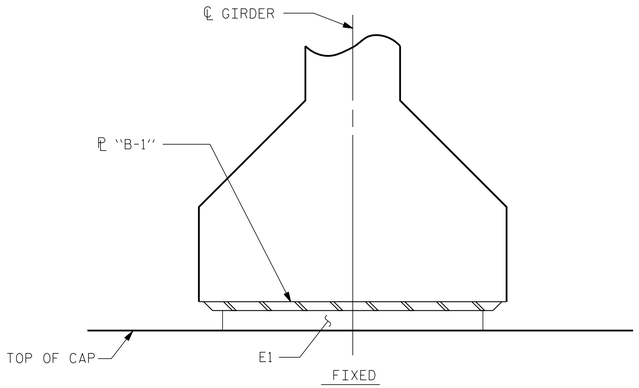

SECTION D-D

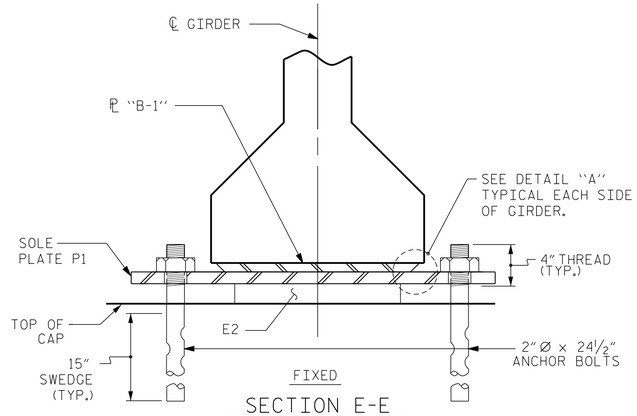

SECTION E-E

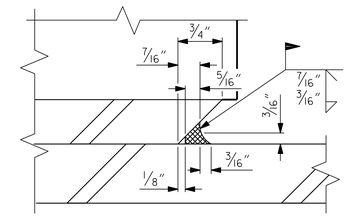

DETAIL "A"

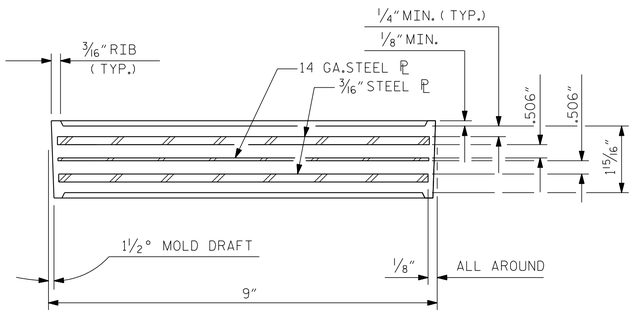

TYPICAL SECTION OF ELASTOMERIC BEARINGS

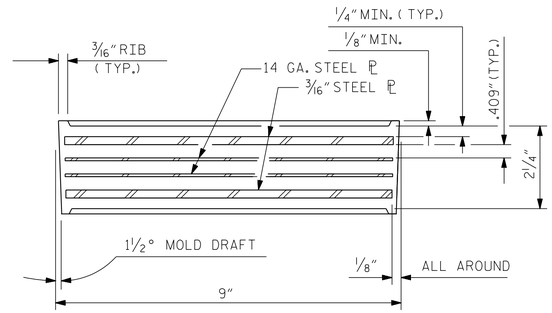

TYPICAL SECTION OF ELASTOMERIC BEARINGS

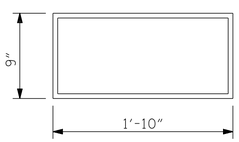

E1 (10 REQ'D)

PLAN VIEW OF ELASTOMERIC BEARING

TYPE IV

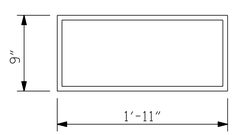

E2 (20 REQ'D)

PLAN VIEW OF ELASTOMERIC BEARING

TYPE V

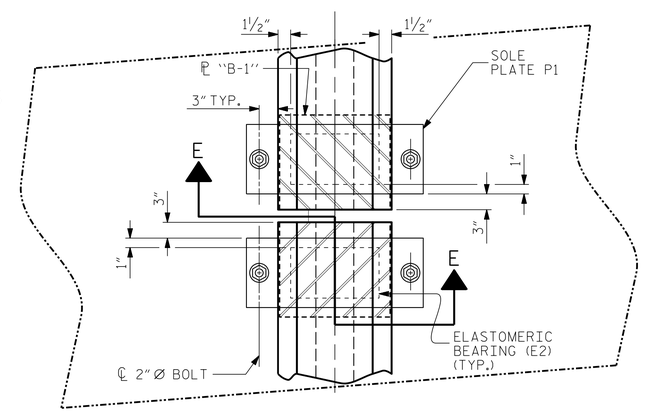

TYPICAL PLAN

(SHOWING CONTINUOUS BENT)

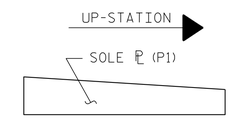

SOLE ℗ PLACEMENT DETAIL

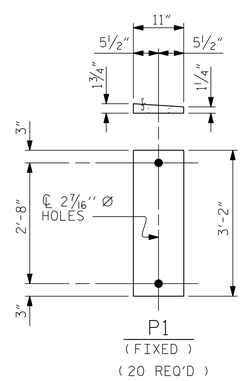

SOLE PLATE DETAILS (P1)

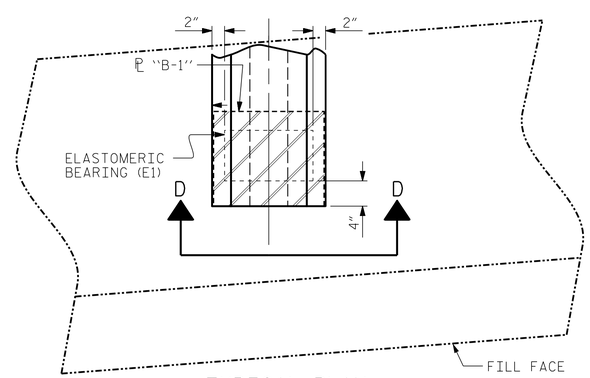

TYPICAL PLAN

(SHOWING END BENT)

NOTES

AT ALL FIXED POINTS OF SUPPORT, NUTS FOR ANCHOR BOLTS ARE TO BE TIGHTENED FINGER TIGHT AND THEN BACKED OFF 1/2 TURN. THE THREAD OF THE NUT AND BOLT SHALL THEN BE BURRED WITH A SHARP POINTED TOOL.

STEEL SOLE PLATES, ANCHOR BOLTS, NUTS, AND WASHERS SHALL BE GALVANIZED IN ACCORDANCE WITH THE STANDARD SPECIFICATIONS.

PRIOR TO WELDING, GRIND THE GALVANIZED SURFACE OF THE PORTION OF THE EMBEDDED PLATE AND SOLE PLATE THAT ARE TO BE WELDED. AFTER WELDING, DAMAGED GALVANIZED SURFACES SHALL BE REPAIRED IN ACCORDANCE WITH THE STANDARD SPECIFICATIONS.

WHEN WELDING THE SOLE PLATE TO THE EMBEDDED PLATE IN THE GIRDER, USE TEMPERATURE INDICATING WAX PENS, OR OTHER SUITABLE MEANS, TO ENSURE THAT THE TEMPERATURE OF THE SOLE PLATE DOES NOT EXCEED 300°F. TEMPERATURES ABOVE THIS MAY DAMAGE THE ELASTOMER.

SOLE PLATE "P", BOLTS, NUTS, WASHERS, AND PIPE SLEEVE SHALL BE INCLUDED IN THE PAY ITEM FOR PRESTRESSED CONCRETE GIRDERS.

ANCHOR BOLTS SHALL MEET THE REQUIREMENTS OF ASTM A449. NUTS SHALL MEET THE REQUIREMENTS OF AASHTO M291-DH OR AASHTO M292-2H. WASHERS SHALL MEET THE REQUIREMENTS OF AASHTO M293. SHOP DRAWINGS ARE NOT REQUIRED FOR ANCHOR BOLT, NUTS AND WASHERS. SHOP INSPECTION IS REQUIRED.

ALL SURFACES OF BEARING PLATES SHALL BE SMOOTH AND STRAIGHT.

THE ELASTOMER IN THE STEEL REINFORCED BEARINGS SHALL HAVE A SHEAR MODULUS OF 0.160 KSI, IN ACCORDANCE WITH AASHTO M251.

FOR STEEL REINFORCED ELASTOMERIC BEARINGS, SEE SPECIAL PROVISIONS.

ALL SOLE PLATES SHALL BE AASHTO M270 GRADE 36.

MAXIMUM ALLOWABLE SERVICE LOADS	
D.L.+L.L. (NO IMPACT)	
TYPE IV	225 k
TYPE V	365 k

PROJECT NO. R-2582A

NORTHAMPTON COUNTY

STATION: 192+85.76 -L-

ENGINEER OF RECORD:

NORTH CAROLINA PROFESSIONAL SEAL 37400 ENGINEER

Gregory M. Gilland

A996AA9D5E5F4A0...

2/1/2019

WETHERILL ENGINEERING

1223 Jones Franklin Rd.
Raleigh, N.C. 27606
Bus: 919 851 8077
Fax: 919 851 8107
LICENSE NO. F-0377

STATE OF NORTH CAROLINA
DEPARTMENT OF TRANSPORTATION
RALEIGH

STANDARD

ELASTOMERIC BEARING DETAILS

PRESTRESSED CONCRETE GIRDER SUPERSTRUCTURE (LEFT LANE)

REVISIONS						SHEET NO.
NO.	BY:	DATE:	NO.	BY:	DATE:	S3-18
1			3			TOTAL SHEETS
2			4			38

DRAWN BY : D. HODGE DATE : 11/18

CHECKED BY : G.M. GILLAND DATE : 11/18

DOCUMENT NOT CONSIDERED FINAL UNLESS ALL SIGNATURES COMPLETED

P:\2018\18127.02 R-2582A\Structures\Revision (Site 2)\Site 2\DGN\LEFT LANE\R2582A_SMU_ BG_650128rev.dgn
1/31/2019 10:51:17 AM

DocuSign Envelope ID: 0556690B4-FFE3-441E-B1AB-BA43025BCD9B

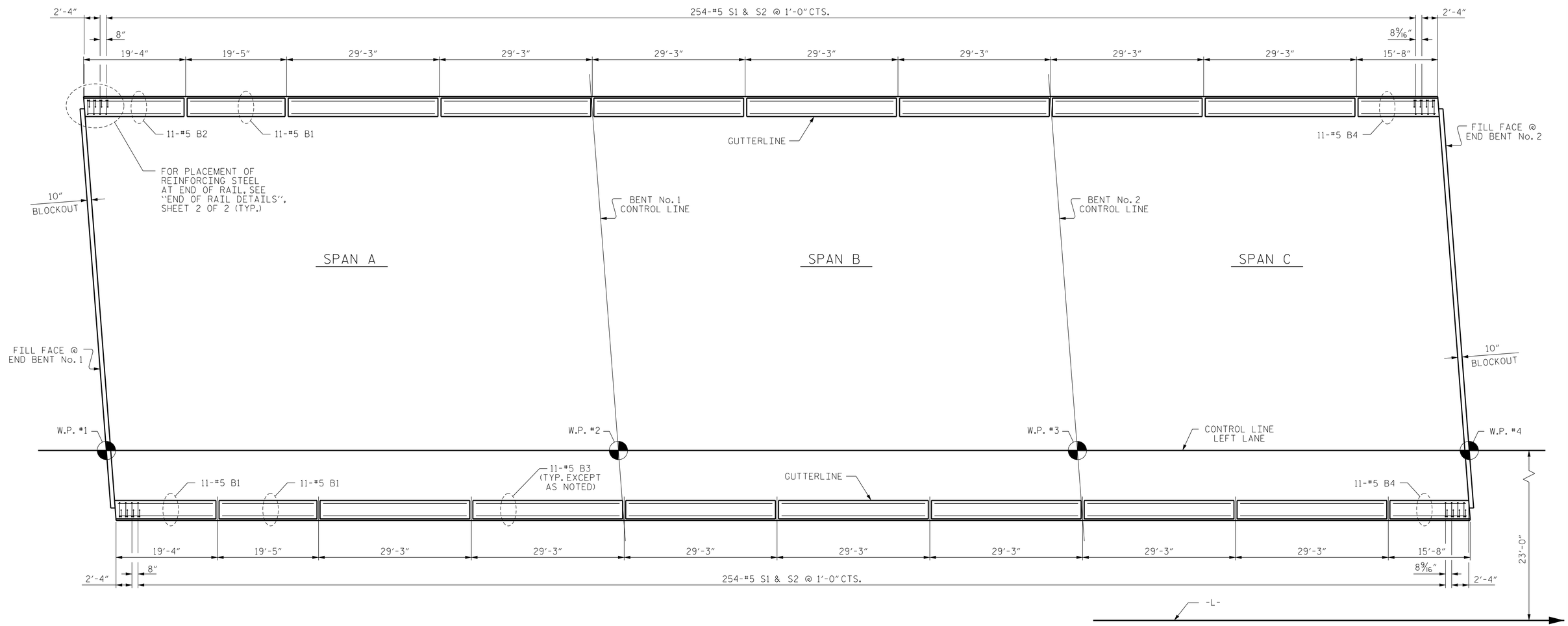

PLAN OF CONCRETE BARRIER RAIL

PROJECT NO. R-2582A

NORTHAMPTON COUNTY

STATION: 192+85.76 -L-

SHEET 1 OF 2

ENGINEER OF RECORD:

NORTH CAROLINA PROFESSIONAL SEAL 37400 ENGINEER G.M. GILLAND

DocuSigned by: G.M. GILLAND A3984A8DE1A4...

2/1/2019

WETHERILL ENGINEERING

1223 Jones Franklin Rd.
Raleigh, N.C. 27606
Bus: 919 851 8077
Fax: 919 851 8107
LICENSE NO. F-0377

STATE OF NORTH CAROLINA
DEPARTMENT OF TRANSPORTATION
RALEIGH

CONCRETE BARRIER RAIL (LEFT LANE)

REVISIONS						SHEET NO.
NO.	BY:	DATE:	NO.	BY:	DATE:	S3-19
1			3			TOTAL SHEETS
2			4			38

DRAWN BY : D. HODGE DATE : 10/18

CHECKED BY : G.M. GILLAND DATE : 11/18

DOCUMENT NOT CONSIDERED FINAL UNLESS ALL SIGNATURES COMPLETED

P:\2018\18127.02_R-2582A\Structures\Revision (Site 2)\Site 2\DGN\LEFT LANE\R2582A_SMU_BR_650128rev.dgn
1/31/2019 10:52:31 AM

DocuSign Envelope ID: 055690B4-FFE3-441E-B1AB-BA43025BCD9B

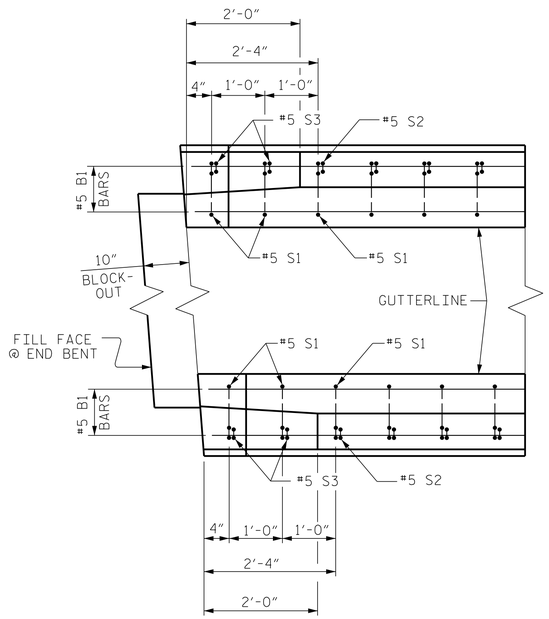

PLAN

NOTES

THE BARRIER RAIL SHALL NOT BE CAST UNTIL ALL SLAB CONCRETE HAS REACHED A MINIMUM COMPRESSIVE STRENGTH OF 3,000 PSI.

ALL REINFORCING STEEL IN BARRIER RAILS SHALL BE EPOXY COATED.

GROOVED CONTRACTION JOINTS, 1/2" IN DEPTH, SHALL BE TOOLED IN ALL EXPOSED FACES OF THE BARRIER RAIL AND IN ACCORDANCE WITH ARTICLE 825-10(B) OF THE STANDARD SPECIFICATIONS. THE CONTRACTION JOINT SHALL BE LOCATED AT EACH THIRD POINT BETWEEN BARRIER RAIL EXPANSION JOINTS. ONLY ONE CONTRACTION JOINT IS REQUIRED AT MIDPOINT OF BARRIER RAIL SEGMENTS LESS THAN 20 FEET IN LENGTH AND NO CONTRACTION JOINTS ARE REQUIRED FOR THOSE SEGMENTS LESS THAN 10 FEET IN LENGTH.

THE #5 S1 & S2 BARS MAY BE SHIFTED SLIGHTLY IN ORDER TO MAINTAIN A 2" MINIMUM CLEARANCE TO THE 1/2" EXPANSION JOINT MATERIAL IN THE BARRIER RAIL.

BAR TYPES

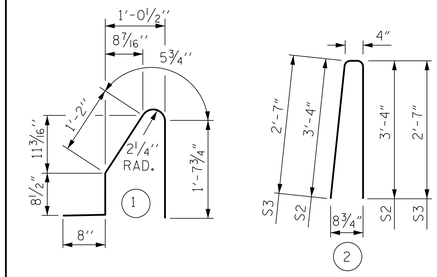

ALL BAR DIMENSIONS ARE OUT TO OUT

BILL OF MATERIAL

FOR CONCRETE BARRIER RAIL ONLY

BAR	NO.	SIZE	TYPE	LENGTH	WEIGHT
* S1	520	#5	1	4'-8"	2531
* S2	512	#5	2	7'-0"	3738
* S3	8	#5	2	5'-6"	46
* B1	33	#5	STR	19'-0"	654
* B2	11	#5	STR	18'-10"	216
* B3	154	#5	STR	28'-10"	4631
* B4	22	#5	STR	15'-2"	348

* EPOXY COATED REINFORCING STEEL 12,164 LBS.
CLASS AA CONCRETE 70.4 CU. YDS.
CONCRETE BARRIER RAIL 518.33 LIN. FT.

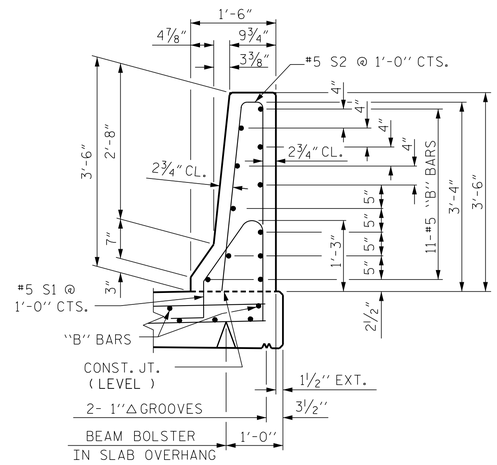

SECTION THRU RAIL

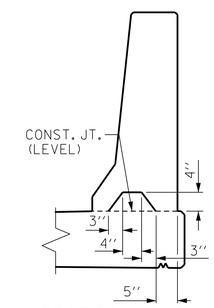

SECTION S-S

AT DAM IN OPEN JOINT (THIS IS TO BE USED ONLY WHEN SLIP FORM IS USED)

** VARIES, SEE "PLAN", SHEET 1 OF 2

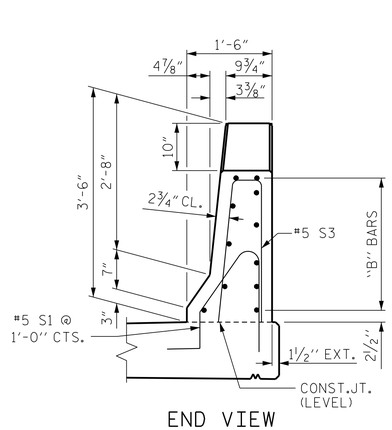

END VIEW

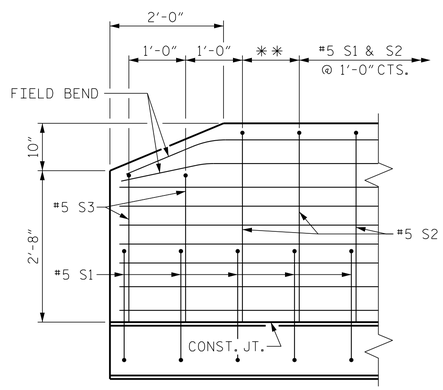

SIDE VIEW

END OF RAIL DETAILS

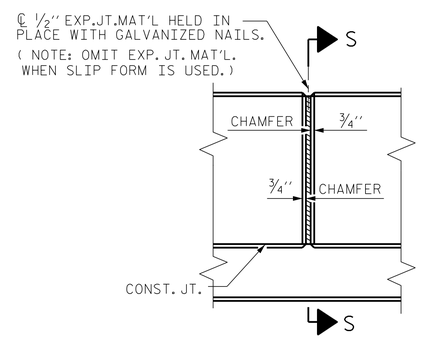

ELEVATION AT EXPANSION JOINTS

BARRIER RAIL DETAILS

PROJECT NO. R-2582A
NORTHAMPTON COUNTY
STATION: 192+85.76 -L-

SHEET 2 OF 2

ENGINEER OF RECORD:

NORTH CAROLINA PROFESSIONAL SEAL 37400 CIVIL ENGINEER G. M. GILLAND

DocuSigned by: A996A960E3C4... 2/1/2019

WETHERILL ENGINEERING
1223 Jones Franklin Rd.
Raleigh, N.C. 27606
Bus: 919 851 8077
Fax: 919 851 8107
LICENSE NO. F-0377

STATE OF NORTH CAROLINA
DEPARTMENT OF TRANSPORTATION
RALEIGH

STANDARD
CONCRETE BARRIER RAIL
(LEFT LANE)

REVISIONS						SHEET NO.
NO.	BY:	DATE:	NO.	BY:	DATE:	S-20
1			3			TOTAL SHEETS
2			4			38

DOCUMENT NOT CONSIDERED FINAL UNLESS ALL SIGNATURES COMPLETED

ASSEMBLED BY : D. HODGE		DATE : 10/18	
CHECKED BY : G.M. GILLAND		DATE : 11/18	
DRAWN BY : ARB 5/87	REV. 7/12	MAA/GM	
CHECKED BY : SJD 9/87	REV. 6/13	MAA/GM	
	REV. 12/17	MAA/THC	

P:\2018\18127.02 R-2582A\Structures\Revision (Site 2\Site 2\DGN\LEFT LANE\R2582A_SMU_ BR_650128rev.dgn
1/31/2019 10:53:05 AM

STD. NO. CBR1 (SHT 3)

DocuSign Envelope ID: 055690B4-FFE3-441E-B1AB-BA43025BCD9B

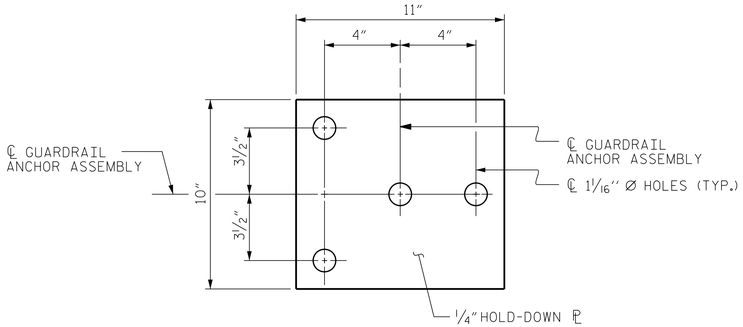

PLAN

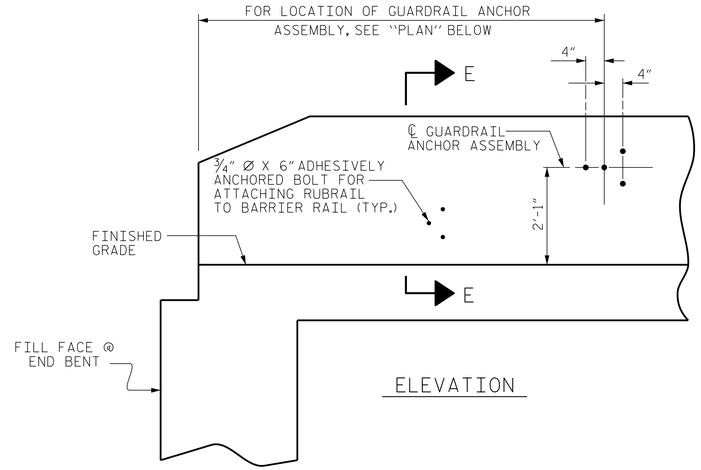

ELEVATION

NOTES

THE GUARDRAIL ANCHOR ASSEMBLY SHALL CONSIST OF A 1/4" HOLD-DOWN PLATE AND 4 - 7/8" Ø BOLTS WITH NUTS AND WASHERS, RUBRAIL, AND ADHESIVELY ANCHORED BOLTS.

THE HOLD-DOWN PLATE SHALL CONFORM TO AASHTO M270 GRADE 36. AFTER FABRICATION, THE HOLD-DOWN PLATE SHALL BE HOT-DIP GALVANIZED IN ACCORDANCE WITH AASHTO M111.

BOLTS SHALL CONFORM TO THE REQUIREMENTS OF ASTM A307 AND NUTS SHALL CONFORM TO THE REQUIREMENTS OF AASHTO M291. BOLTS, NUTS AND WASHERS SHALL BE GALVANIZED. (AT THE CONTRACTOR'S OPTION, STAINLESS STEEL BOLTS, NUTS AND WASHERS MAY BE USED AS AN ALTERNATE FOR THE 7/8" Ø GALVANIZED BOLTS, NUTS AND WASHERS. THEY SHALL CONFORM TO OR EXCEED THE MECHANICAL REQUIREMENTS OF ASTM A307. THE USE OF THIS ALTERNATE SHALL BE APPROVED BY THE ENGINEER.)

THE GUARDRAIL ANCHOR ASSEMBLY IS REQUIRED AT ALL POINTS WHERE APPROACH GUARDRAIL IS TO BE ATTACHED TO THE END OF BARRIER RAIL. FOR POINTS OF ATTACHMENT, SEE SKETCH.

AFTER INSTALLATION, THE EXPOSED THREAD OF THE BOLT SHALL BE BURRED WITH A SHARP POINTED TOOL.

THE COST OF THE GUARDRAIL ANCHOR ASSEMBLY SHALL BE INCLUDED IN THE UNIT CONTRACT PRICE BID FOR CONCRETE BARRIER RAIL.

THE 1 1/4" Ø HOLES SHALL BE FORMED OR DRILLED WITH A CORE BIT. IMPACT TOOLS WILL NOT BE PERMITTED. ANY CONCRETE DAMAGED BY THIS WORK SHALL BE REPAIRED TO THE SATISFACTION OF THE ENGINEER.

THE C6 X 8.2 RUBRAIL IS TO BE ADHESIVELY ANCHORED TO THE RAIL USING THREE 3/4" Ø X 6" BOLTS WITH WASHERS. LEVEL ONE FIELD TESTING IS REQUIRED, AND THE YIELD LOAD OF THE 3/4" Ø BOLT IS 12 KIPS. FOR ADHESIVELY ANCHORED ANCHOR BOLTS OR DOWELS, SEE STANDARD SPECIFICATIONS. SEE ROADWAY STANDARD 862.03 FOR DETAILS AND LOCATION OF THE RUBRAIL.

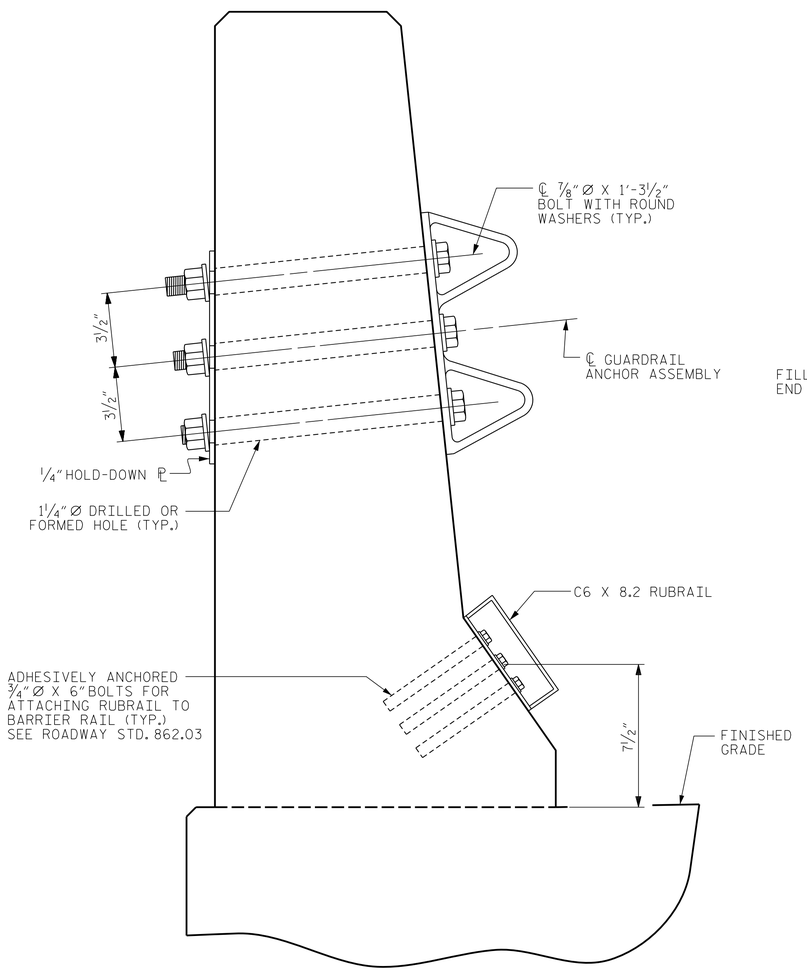

SECTION E-E

GUARDRAIL ANCHOR ASSEMBLY DETAILS

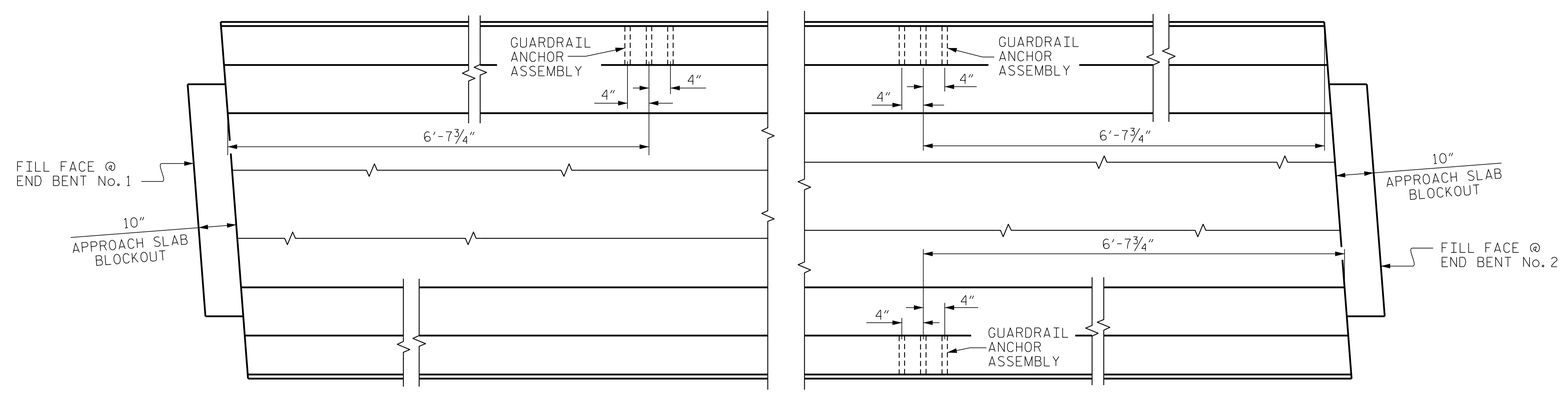

PLAN

LOCATION OF ANCHORS FOR GUARDRAIL

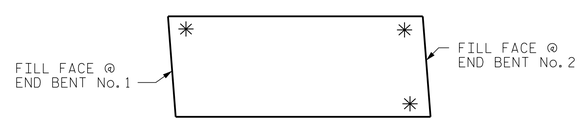

SKETCH SHOWING POINTS OF ATTACHMENTS

✳ DENOTES GUARDRAIL ANCHOR ASSEMBLY

PROJECT NO. R-2582A
NORTHAMPTON COUNTY
STATION: 192+85.76 -L-

ENGINEER OF RECORD:
NORTH CAROLINA PROFESSIONAL SEAL 37400 ENGINEER
G.M. GILLAND
A996A9D6E5E5D4...
2/1/2019
WETHERILL ENGINEERING
1223 Jones Franklin Rd.
Raleigh, N.C. 27606
Bus: 919 851 8077
Fax: 919 851 8107
LICENSE NO. F-0377

STATE OF NORTH CAROLINA
DEPARTMENT OF TRANSPORTATION
RALEIGH

GUARDRAIL ANCHORAGE FOR BARRIER RAIL (LEFT LANE)

REVISIONS								SHEET NO.
NO.	BY:	DATE:	NO.	BY:	DATE:			S3-21
1			3					TOTAL SHEETS
2			4					38

DRAWN BY : D. HODGE DATE : 10/18
CHECKED BY : G.M. GILLAND DATE : 11/18

DOCUMENT NOT CONSIDERED FINAL UNLESS ALL SIGNATURES COMPLETED

P:\2018\18127.02 R-2582A\Structures\Revision (Site 2\Site 2\DGN\LEFT LANE\R2582A_SMU_ GR_650128rev.dgn
1/31/2019 10:58:28 AM

DocuSign Envelope ID: 055690B4-FFE3-441E-B1AB-BA43025BCD9B

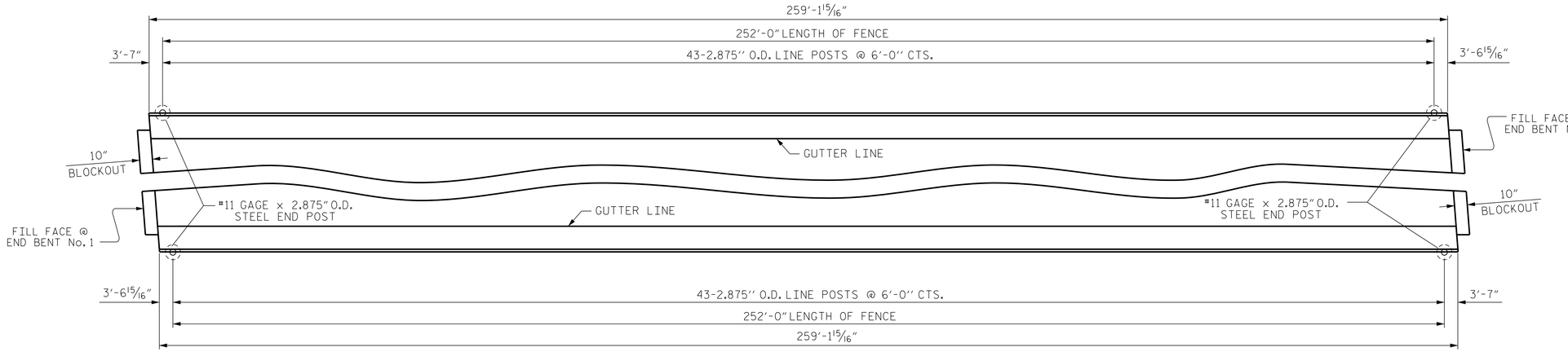

PLAN OF FENCE POST SPACING

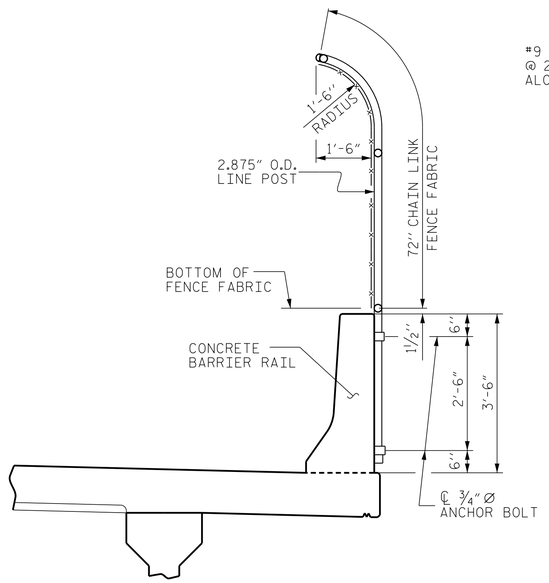

SECTION THRU FENCE

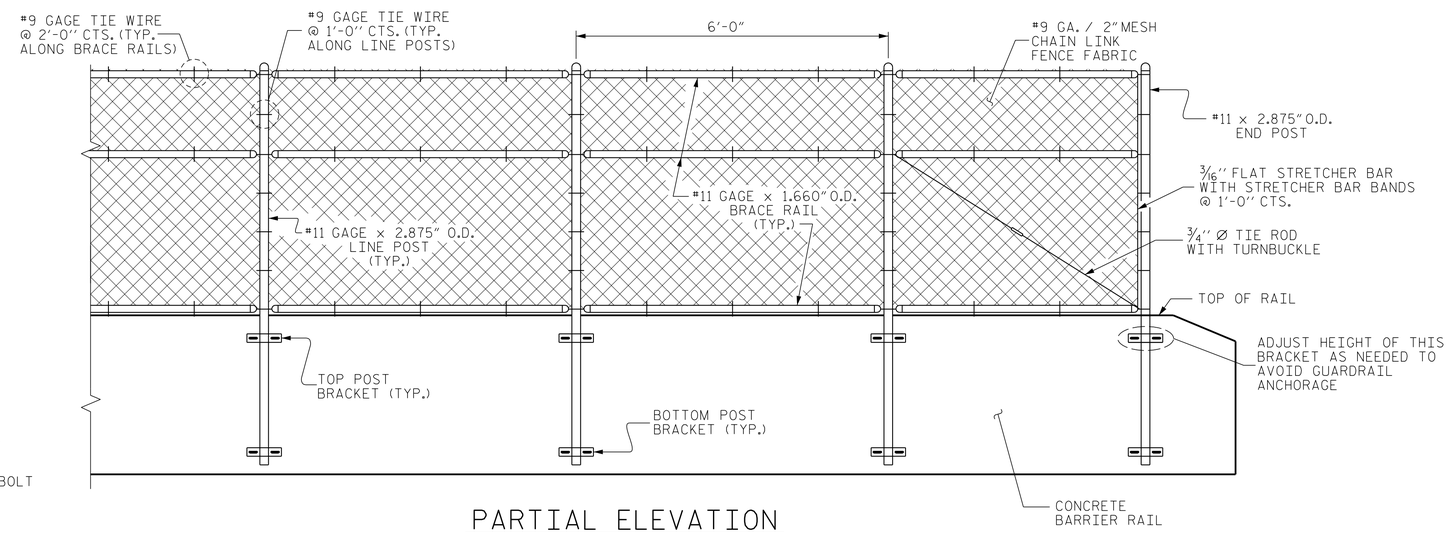

PARTIAL ELEVATION

NOTES

FOR BRIDGE MOUNTED CHAIN LINK FENCE, SEE SPECIAL PROVISIONS.

MATERIAL FOR ANCHOR BOLTS SHALL BE TYPE 304 STAINLESS STEEL WITH A MINIMUM 9000 PSI ULTIMATE STRENGTH. NUTS AND WASHERS SHALL BE TYPE 304 STAINLESS STEEL. ANCHOR BOLTS SHALL BE EMBEDDED AS PER ADHESIVE BONDING SYSTEM MANUFACTURER SPECIFICATIONS. NUTS SHALL BE AMERICAN STANDARD FINISHED HEXAGON THICK NUTS, CLASS 2B THREADS.

FOR SETTING ANCHOR BOLTS, THE CONTRACTOR SHALL USE AN ADHESIVE BONDING SYSTEM. LEVEL ONE FIELD TESTING OF BONDING SYSTEM IS REQUIRED.

ALL FENCE MATERIAL SHALL MEET THE REQUIREMENTS OF SECTION 1050 OF THE STANDARD SPECIFICATIONS. VINYL COAT ALL STEEL PARTS AND HARDWARE IN ACCORANCE WITH ARTICLE 1050 OF THE STANDARD SPECIFICATIONS.

ALL FENCE COMPONENTS SHALL BE VINYL COATED - BLACK.

FENCE POST LOCATIONS SHALL BE SHIFTED, AS NECESSARY, TO MAINTAIN A 6" MINIMUM DISTANCE FROM ANCHOR BOLT TO JOINTS IN BARRIER RAIL.

WELDING SHALL BE DONE IN ACCORDANCE WITH ARTICLE 1072-20 OF STANDARD SPECIFICATIONS.

ADHESIVE BONDING SYSTEM SHALL HAVE MINIMUM PULLOUT STRENGTH OF 10 KIPS. THE ADHESIVE BONDING SYSTEM SHALL BE CHOSEN FROM THOSE ON THE NCDOT APPROVED PRODUCTS LIST.

72" CHAIN LINK FENCE
TOTAL PAY LENGTH 504.0 LIN. FT.

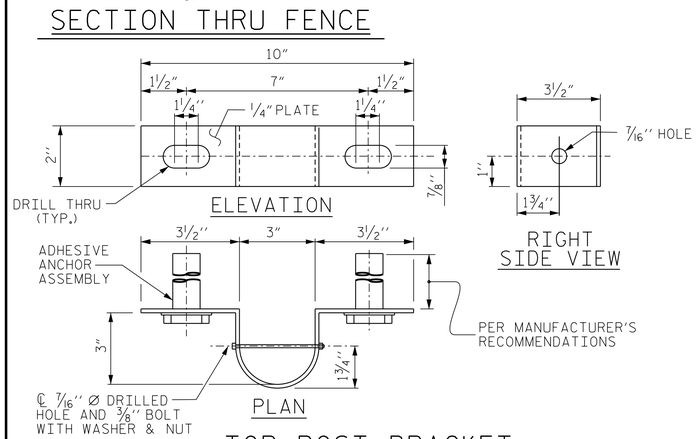

TOP POST BRACKET

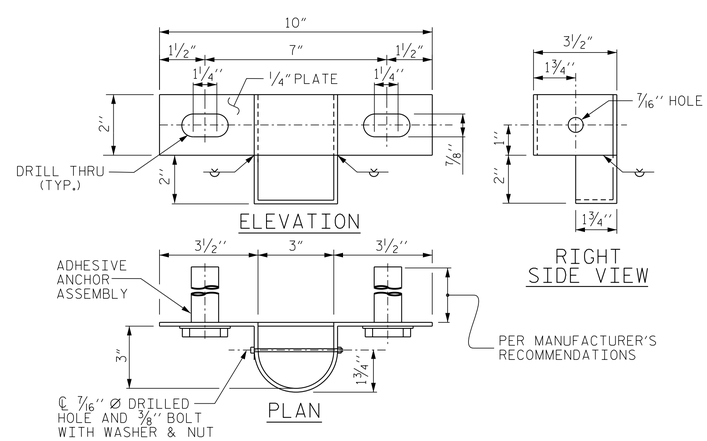

BOTTOM POST BRACKET

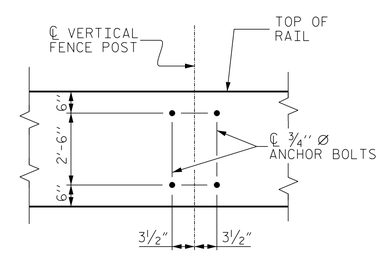

BOLT SETTING DETAIL

PROJECT NO. R-2582A
NORTHAMPTON COUNTY
STATION: 192+85.76 -L-

ENGINEER OF RECORD:
NORTH CAROLINA PROFESSIONAL SEAL 37400 ENGINEER GARY M. GILLAND
2/1/2019

WETHERILL ENGINEERING
1223 Jones Franklin Rd.
Raleigh, N.C. 27606
Bus: 919 851 8077
Fax: 919 851 8107
LICENSE NO. F-0377

STATE OF NORTH CAROLINA
DEPARTMENT OF TRANSPORTATION
RALEIGH

BRIDGE MOUNTED CHAIN LINK FENCE DETAILS

(LEFT LANE)

REVISIONS						SHEET NO.
NO.	BY:	DATE:	NO.	BY:	DATE:	S3-22
1			3			TOTAL SHEETS
2			4			38

DRAWN BY : D. HODGE DATE : 10/18
CHECKED BY : G.M. GILLAND DATE : 11/18

DOCUMENT NOT CONSIDERED FINAL UNLESS ALL SIGNATURES COMPLETED

P:\2018\18127.02_R-2582A\Structures\Revision (Site 2)\Site 2\DGN\LEFT LANE\R2582A_SMU_CL_650128rev.dgn
1/31/2019 11:09:54 AM

DocuSign Envelope ID: 224528F0-0F95-4F76-A9C5-38258D5BEEA0

GROOVING BRIDGE FLOORS	
APPROACH SLABS	2,092 SQ.FT.
BRIDGE DECK	11,144 SQ.FT.
TOTAL	13,236 SQ.FT.

CLASS AA CONCRETE BREAKDOWN		
POUR #1	133.5	CY
POUR #2	160.2	CY
POUR #3	144.3	CY
POUR #4	75.0	CY
CLASS AA CONCRETE BREAKDOWN TOTAL	513.0	CY

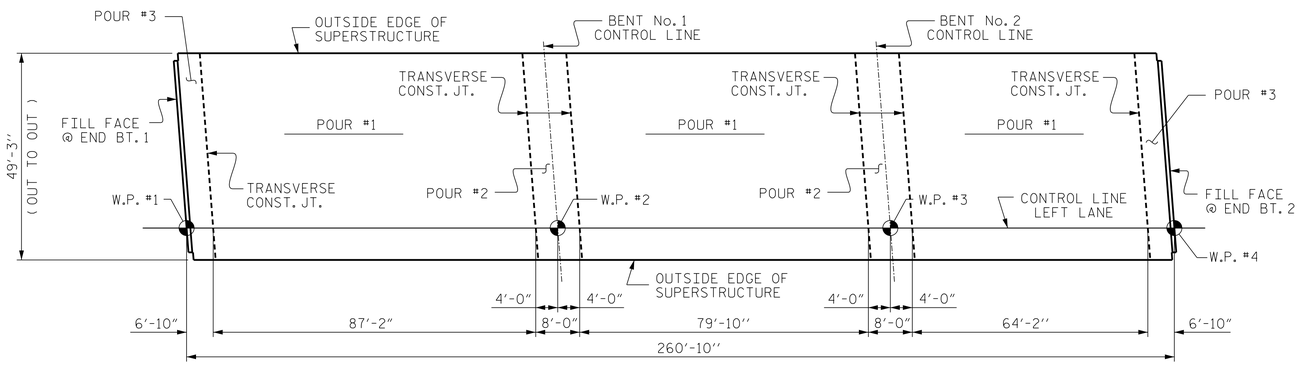

OPTIONAL POUR SEQUENCE SKETCH

NOTE :
POUR #3 INCLUDES UPPER PART OF THE INTEGRAL END BENT.

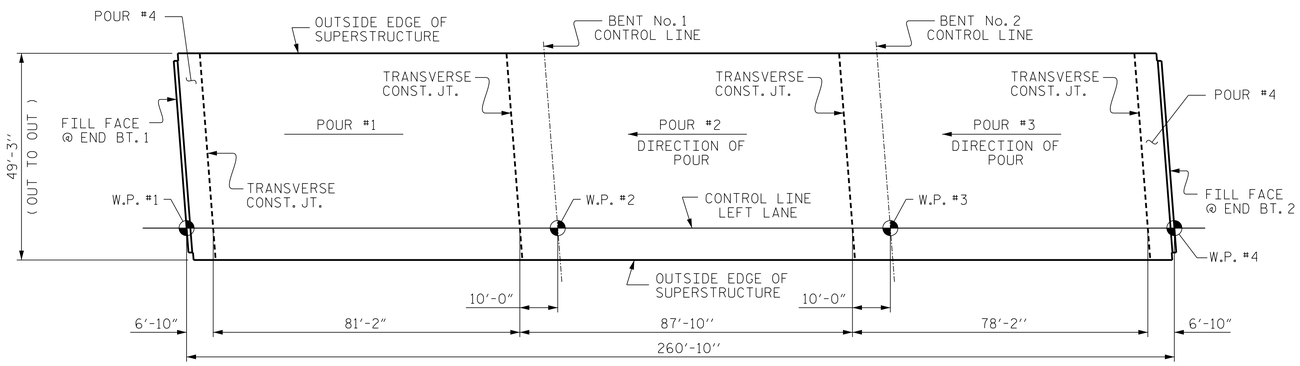

POUR SEQUENCE SKETCH

NOTE :
POUR #4 INCLUDES UPPER PART OF THE INTEGRAL END BENT.

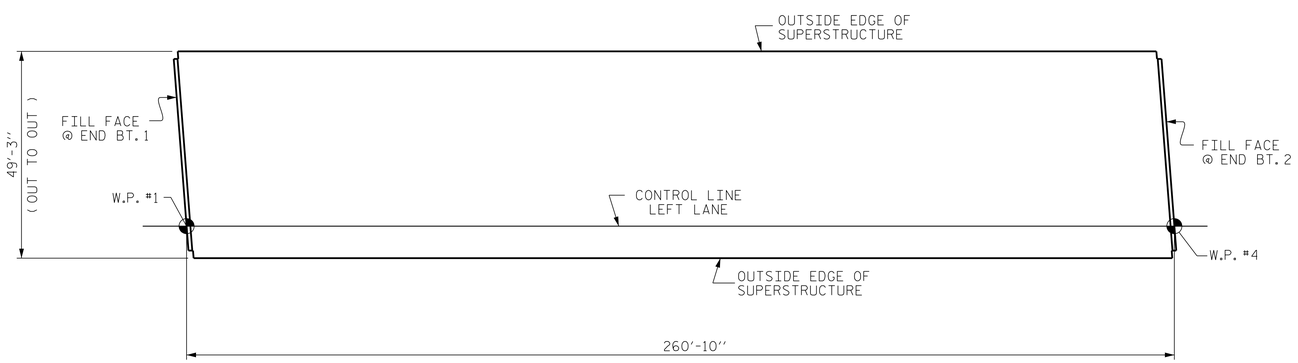

LAYOUT FOR COMPUTING AREA REINFORCED CONCRETE DECK SLAB
(SQ. FT. = 12,846)

BAR TYPES

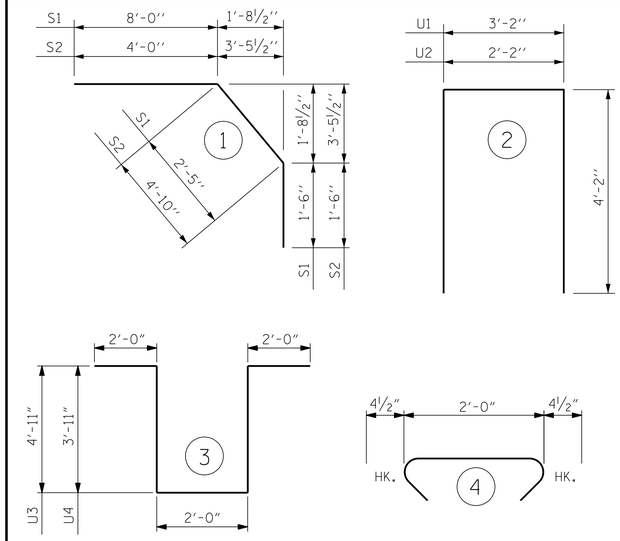

ALL BAR DIMENSIONS ARE OUT TO OUT

SUPERSTRUCTURE BILL OF MATERIAL

	CLASS AA CONCRETE	REINFORCING STEEL	✳ EPOXY COATED REINFORCING STEEL
	(CU. YDS.)	(LBS.)	(LBS.)
TOTALS ✳✳	513.0	49,338	48,831

✳✳ QUANTITIES FOR CONCRETE BARRIER RAIL ARE NOT INCLUDED

BILL OF MATERIAL

BAR	NO.	SIZE	TYPE	LENGTH	WEIGHT
✳ A1	557	#5	STR	48'-11"	28,418
A2	557	#5	STR	48'-11"	28,418
✳ A101	2	#5	STR	44'-6"	93
✳ A102	2	#5	STR	38'-6"	80
✳ A103	2	#5	STR	32'-7"	68
✳ A104	2	#5	STR	26'-7"	55
✳ A105	2	#5	STR	20'-7"	43
✳ A106	2	#5	STR	14'-8"	31
✳ A107	2	#5	STR	8'-8"	18
A201	2	#5	STR	44'-6"	93
A202	2	#5	STR	38'-6"	80
A203	2	#5	STR	32'-7"	68
A204	2	#5	STR	26'-7"	55
A205	2	#5	STR	20'-7"	43
A206	2	#5	STR	14'-8"	31
A207	2	#5	STR	8'-8"	18
✳ B1	20	#4	STR	27'-9"	371
✳ B2	94	#6	STR	20'-0"	2824
✳ B3	64	#4	STR	24'-4"	1040
✳ B4	64	#6	STR	34'-5"	3308
✳ B5	62	#6	STR	28'-0"	2607
✳ B6	32	#4	STR	29'-0"	620
✳ B7	32	#6	STR	58'-11"	2832
✳ B8	62	#6	STR	24'-6"	2282
✳ B9	64	#4	STR	18'-9"	802
✳ B10	94	#6	STR	15'-0"	2118
B11	310	#5	STR	53'-6"	17,298
K1	20	#4	STR	24'-6"	327
K2	48	#4	STR	8'-6"	273
K3	48	#4	STR	9'-6"	305
K4	8	#4	STR	8'-0"	43
K5	16	#4	STR	6'-10"	73
K6	8	#4	STR	2'-5"	13
K7	8	#4	STR	2'-10"	15
K8	4	#4	STR	2'-1"	6
K9	20	#4	STR	22'-2"	296
✳ S1	84	#4	1	11'-11"	669
✳ S2	80	#4	1	10'-4"	552
S3	272	#4	4	2'-9"	500
U1	80	#4	2	11'-6"	615
U2	4	#4	2	10'-6"	28
U3	56	#4	3	15'-10"	592
U4	16	#4	3	13'-10"	148
REINFORCING STEEL				LBS.	49,338
✳ EPOXY COATED REINFORCING STEEL				LBS.	48,831

✳ THESE BARS ARE EPOXY COATED.

SUPERSTRUCTURE REINFORCING STEEL LENGTHS ARE BASED ON THE FOLLOWING MINIMUM SPLICE LENGTHS

BAR SIZE	SUPERSTRUCTURE EXCEPT APPROACH SLABS, PARAPET, AND BARRIER RAIL		APPROACH SLABS		PARAPET AND BARRIER RAIL
	EPOXY COATED	UNCOATED	EPOXY COATED	UNCOATED	
#4	2'-0"	1'-9"	2'-0"	1'-9"	2'-9"
#5	2'-6"	2'-2"	2'-6"	2'-2"	3'-5"
#6	3'-0"	2'-7"	3'-10"	2'-7"	4'-4"
#7	5'-3"	3'-6"			
#8	6'-10"	4'-7"			

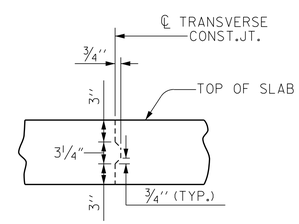

TRANSVERSE CONSTRUCTION JOINT DETAIL

NOTE: SLAB REINFORCING STEEL SHALL BE CONTINUOUS THRU JOINT

PROJECT NO. R-2582A
NORTHAMPTON COUNTY
STATION: 192+85.76 -L-

ENGINEER OF RECORD:
3/26/2019
NORTH CAROLINA PROFESSIONAL SEAL 37400 ENGINEER GREGORY M. GILLAND
Docu Signed by: Gregory M. Gilland
A9964A9DE52D485...

WETHERILL ENGINEERING
1223 Jones Franklin Rd.
Raleigh, N.C. 27606
Bus: 919 851 8077
Fax: 919 851 8107
LICENSE NO. F-0377

STATE OF NORTH CAROLINA
DEPARTMENT OF TRANSPORTATION
RALEIGH

SUPERSTRUCTURE
BILL OF MATERIAL
(LEFT LANE)

REVISIONS						SHEET NO.
NO.	BY:	DATE:	NO.	BY:	DATE:	S3-23
1			3			TOTAL SHEETS
2			4			38

DRAWN BY : D. HODGE DATE : 10/18
CHECKED BY : T. KOCH/G.M.G. DATE : 11/18

DOCUMENT NOT CONSIDERED FINAL UNLESS ALL SIGNATURES COMPLETED

P:\2018\18127.02_R-2582A\Structures\Revision (Site 2)\Site 2\DGN\LEFT_LANE\R2582A_SMU_BM_650128revdgn
3/25/2019 9:12:00 AM

DocuSign Envelope ID: 224528F0-0F95-4F76-A9C5-38258D5BEEA0

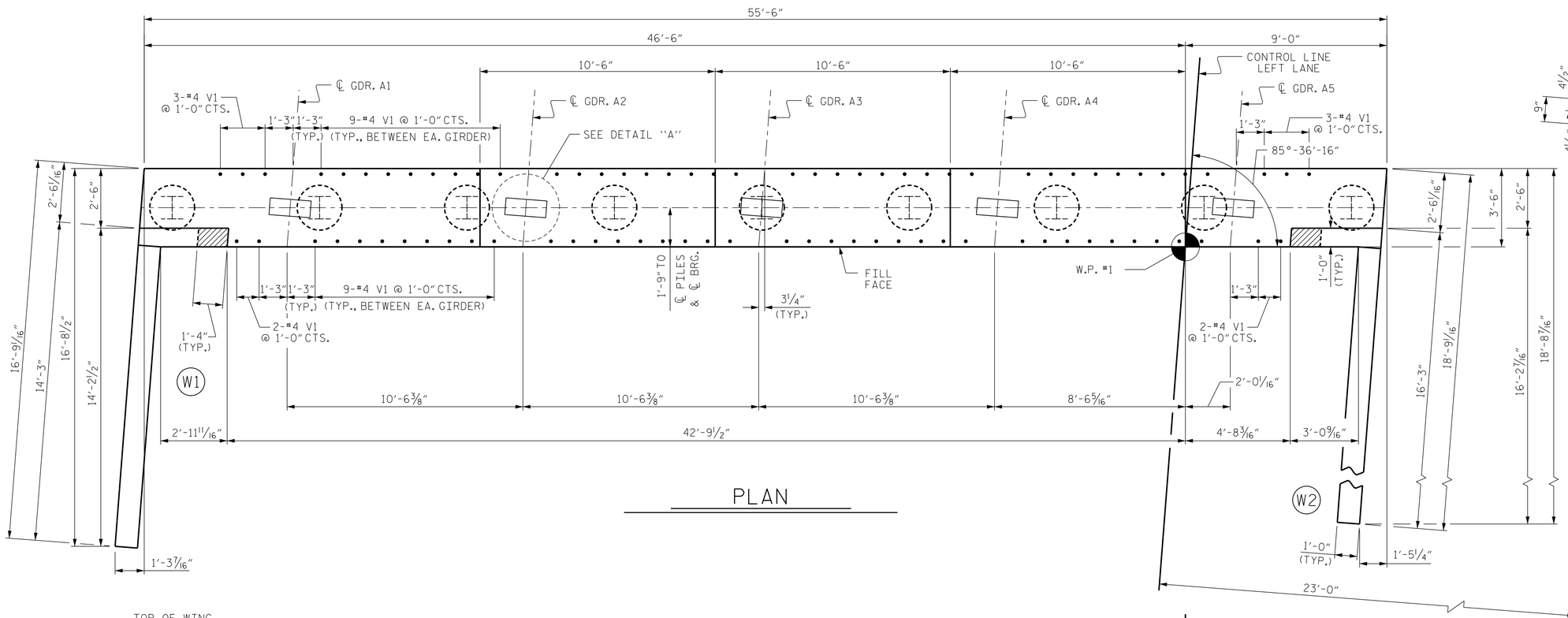

PLAN

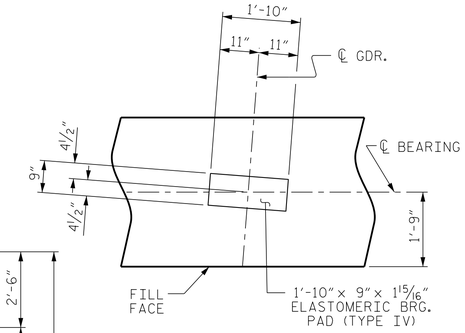

DETAIL "A"

(TYP. EACH GIRDER)

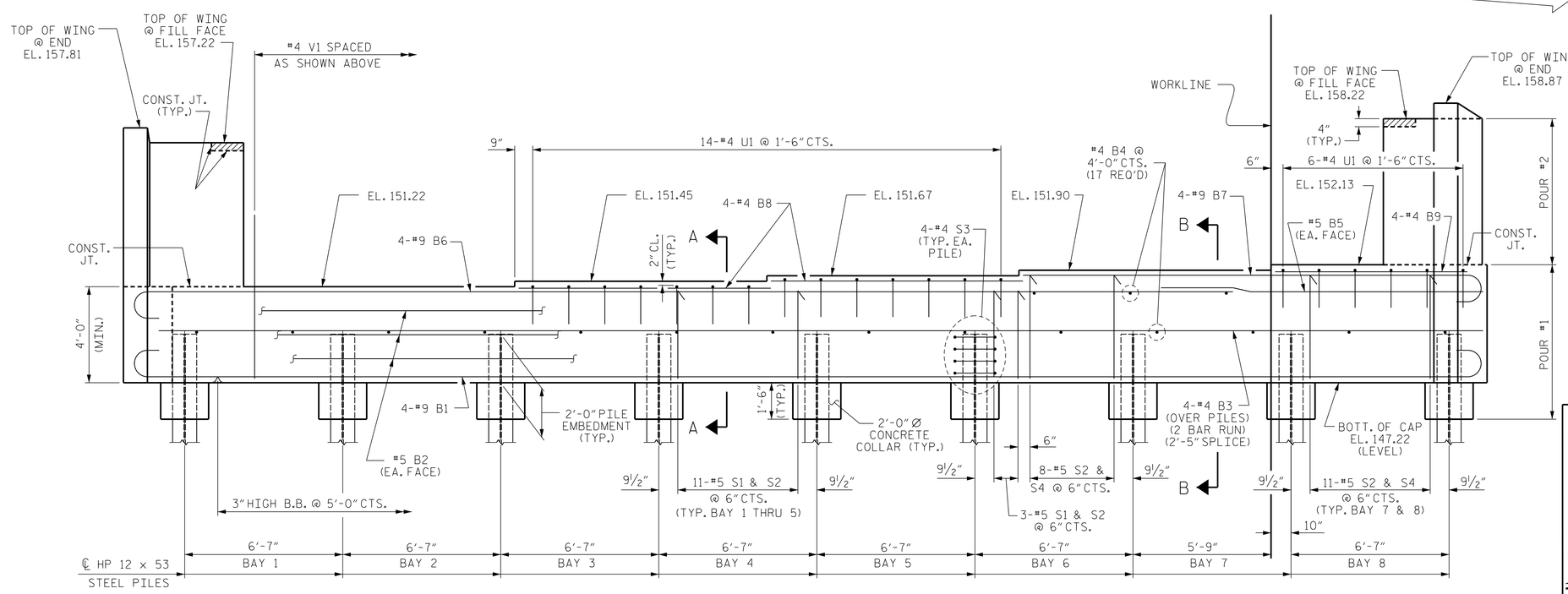

ELEVATION

FOR SECTION A-A & B-B, SEE SHEET 3 OF 3.

PROJECT NO. R-2582A

NORTHAMPTON COUNTY

STATION: 192+85.76 -L-

SHEET 1 OF 3

ENGINEER OF RECORD: 3/26/2019

NORTH CAROLINA PROFESSIONAL SEAL 37400 ENGINEER GREGORY M. GILLAND

Gregory M. Gilland

WETHERILL ENGINEERING

1223 Jones Franklin Rd.
Raleigh, N.C. 27606
Bus: 919 851 8077
Fax: 919 851 8107
LICENSE NO. F-0377

STATE OF NORTH CAROLINA
DEPARTMENT OF TRANSPORTATION
RALEIGH

SUBSTRUCTURE

END BENT No. 1

(LEFT LANE)

REVISIONS						SHEET NO.
NO.	BY:	DATE:	NO.	BY:	DATE:	S3-24
1			3			TOTAL SHEETS
2			4			38

DRAWN BY : D. HODGE DATE : 11/18

CHECKED BY : G.M. GILLAND DATE : 11/18

DOCUMENT NOT CONSIDERED FINAL UNLESS ALL SIGNATURES COMPLETED

P:\2018\18127.02 R-2582A\Structures\Revision (Site 2\Site 2\DGN\LEFT LANE\R2582A_SMU_ EB_650128rev.dgn
3/25/2019 8:07:23 AM

DocuSign Envelope ID: 224528F0-0F95-4F76-A9C5-38258D5BEEA0

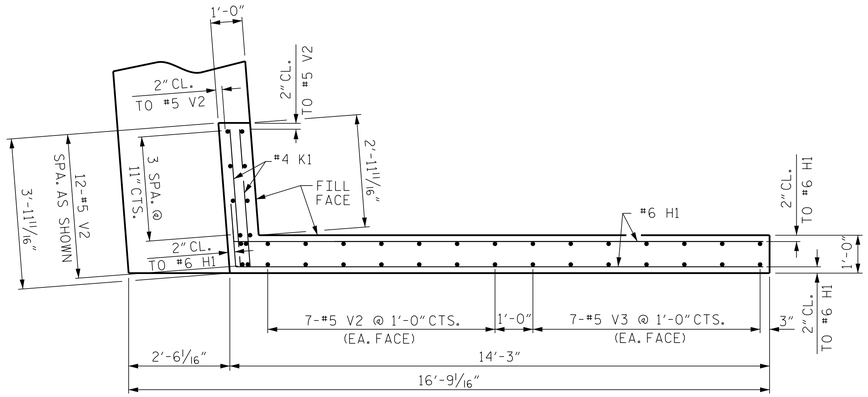

PLAN OF WING - (W1)

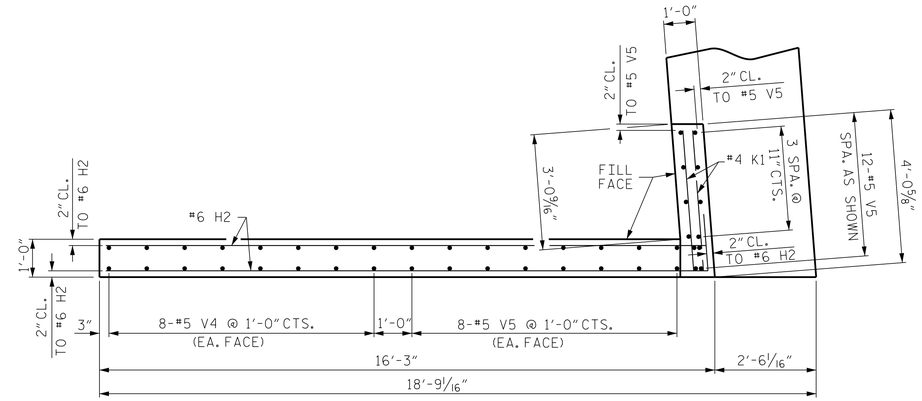

PLAN OF WING - (W2)

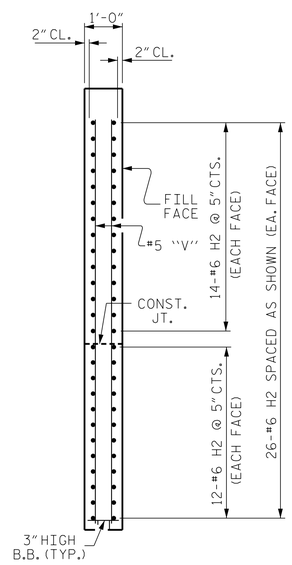

SECTION Y-Y

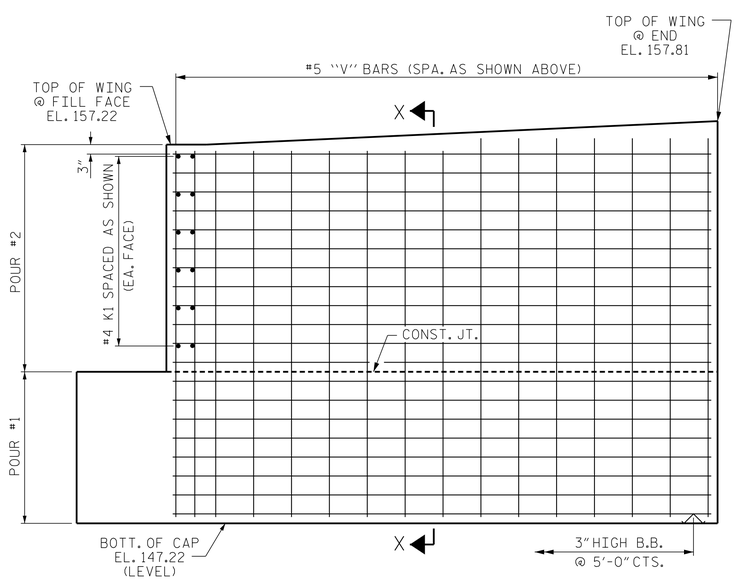

ELEVATION OF WING - (W1)

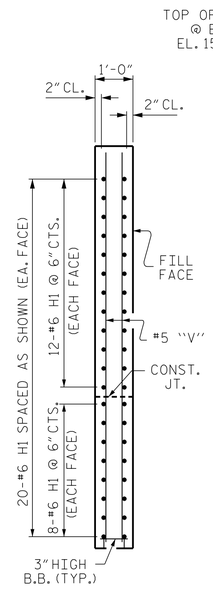

SECTION X-X

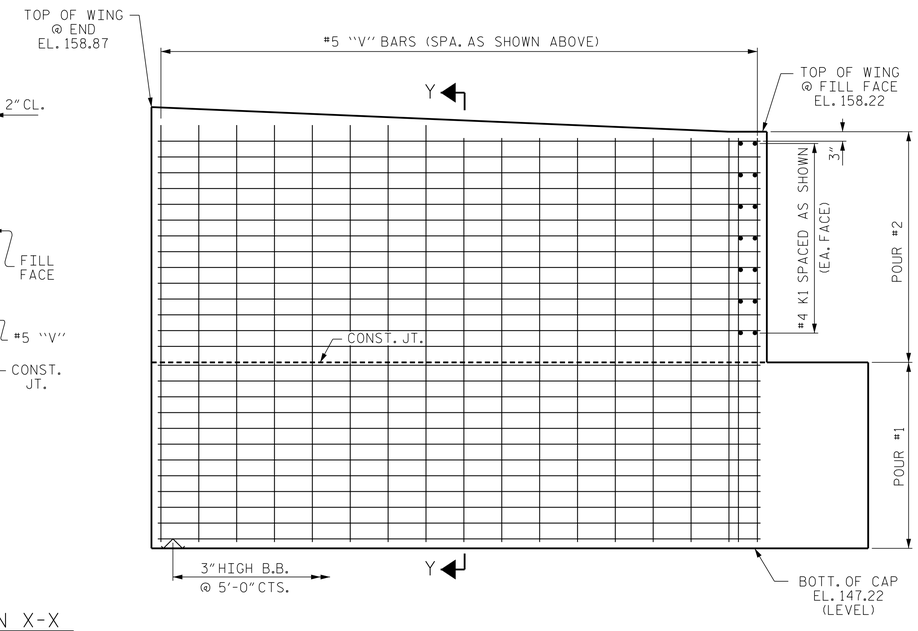

ELEVATION OF WING - (W2)

PROJECT NO. R-2582A
NORTHAMPTON COUNTY
STATION: 192+85.76 -L-

SHEET 2 OF 3

ENGINEER OF RECORD:
3/26/2019

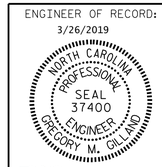

Docusigned by:
Gregory M. Gilland
A996A960E520465...

WETHERILL ENGINEERING
1223 Jones Franklin Rd.
Raleigh, N.C. 27606
Bus: 919 851 8077
Fax: 919 851 8107
LICENSE NO. F-0377

STATE OF NORTH CAROLINA
DEPARTMENT OF TRANSPORTATION
RALEIGH

SUBSTRUCTURE
END BENT No. 1
(LEFT LANE)

REVISIONS						SHEET NO.
NO.	BY:	DATE:	NO.	BY:	DATE:	S3-25
1			3			TOTAL SHEETS
2			4			38

DOCUMENT NOT CONSIDERED FINAL UNLESS ALL SIGNATURES COMPLETED

DRAWN BY : D. HODGE DATE : 11/18
CHECKED BY : G.M. GILLAND DATE : 11/18

P:\2018\18127\02_R-2582A\Structures\Revision (Site 2)\Site 2\DGN\LEFT LANE\R2582A_SMU_ EB_650128rev.dgn
3/25/2019 8:08:18 AM

DocuSign Envelope ID: 224528F0-0F95-4F76-A9C5-38258D5BEEA0

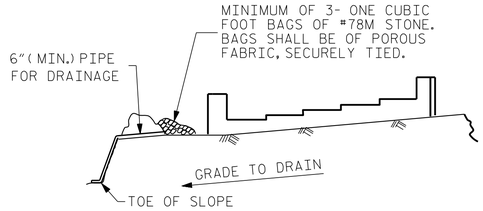

BAGGED STONE AND PIPE SHALL BE PLACED IMMEDIATELY AFTER COMPLETION OF END BENT EXCAVATION. PIPE MAY BE EITHER CONCRETE, CORRUGATED STEEL, CORRUGATED ALUMINUM ALLOY, OR CORRUGATED PLASTIC. PERFORATED PIPE WILL NOT BE ALLOWED.

BAGGED STONE SHALL REMAIN IN PLACE UNTIL THE ENGINEER DIRECTS THAT IT BE REMOVED. THE CONTRACTOR SHALL REMOVE AND DISPOSE OF SILT ACCUMULATIONS AT BAGGED STONE WHEN SO DIRECTED BY THE ENGINEER. BAGS SHALL BE REMOVED AND REPLACED WHENEVER THE ENGINEER DETERMINES THAT THEY HAVE DETERIORATED AND LOST THEIR EFFECTIVENESS.

NO SEPARATE PAYMENT WILL BE MADE FOR THIS WORK AND THE ENTIRE COST OF THIS WORK SHALL BE INCLUDED IN THE UNIT CONTRACT PRICE BID FOR THE SEVERAL PAY ITEMS.

TEMPORARY DRAINAGE AT END BENT

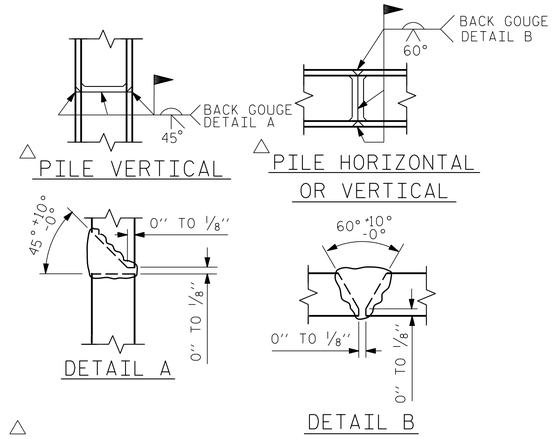

PILE SPLICE DETAILS

BAR TYPES

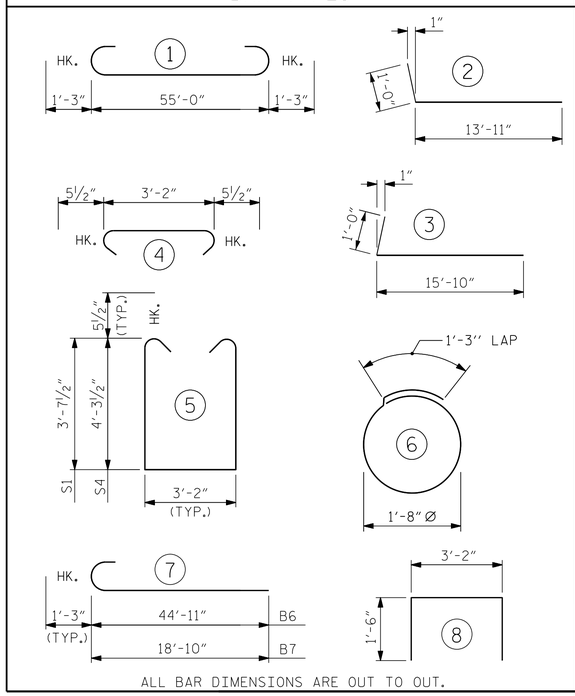

ALL BAR DIMENSIONS ARE OUT TO OUT.

BILL OF MATERIAL

END BENT No. 1

BAR	NO.	SIZE	TYPE	LENGTH	WEIGHT
B1	4	#9	1	57'-6"	782
B2	6	#5	STR	55'-2"	345
B3	8	#4	STR	28'-10"	154
B4	17	#4	STR	3'-2"	36
B5	2	#5	STR	13'-2"	27
B6	4	#9	7	46'-2"	628
B7	4	#9	7	20'-1"	273
B8	8	#4	STR	10'-6"	56
B9	4	#4	STR	8'-1"	22
H1	40	#6	2	14'-11"	896
H2	52	#6	3	16'-10"	1315
K1	26	#4	STR	3'-7"	62
S1	58	#5	5	11'-4"	686
S2	88	#5	4	4'-1"	375
S3	36	#4	6	6'-6"	156
S4	30	#5	5	12'-8"	396
U1	20	#4	8	6'-2"	82
V1	82	#4	STR	6'-8"	365
V2	26	#5	STR	9'-8"	262
V3	14	#5	STR	10'-0"	146
V4	16	#5	STR	11'-0"	184
V5	28	#5	STR	10'-8"	312

REINFORCING STEEL 7,560 LBS.

CLASS A CONCRETE BREAKDOWN

POUR #1	CAP, LOWER PART OF WINGS AND CONCRETE COLLARS	38.0 C.Y.
POUR #2	UPPER PART OF WINGS	8.5 C.Y.
TOTAL CLASS A CONCRETE		46.5 C.Y.

HP 12 X 53 STEEL PILES
NO: 9 810 L.F.

PILE DRIVING EQUIPMENT SETUP FOR HP 12 X 53 STEEL PILES 9 EA.

PILE REDRIVES 5 EA.

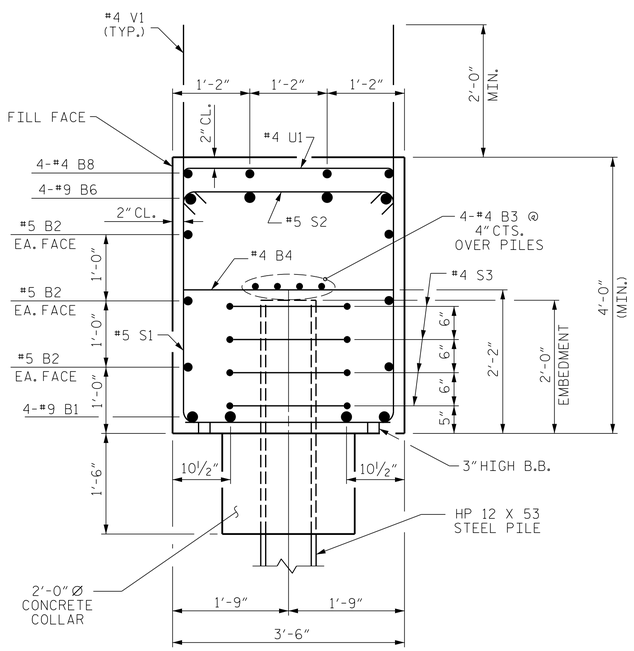

SECTION A-A

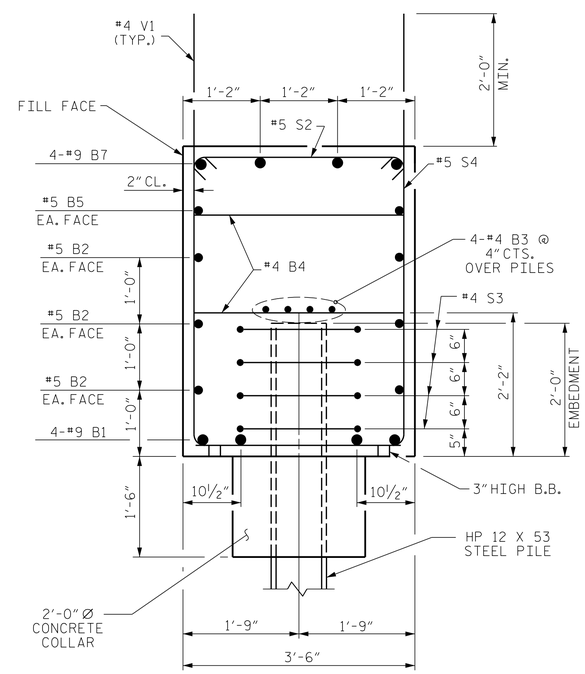

SECTION B-B

NOTES

THE CONCRETE IN THE SHADED AREA OF THE WING SHALL BE POURED AFTER THE BARRIER RAILS ARE CAST IF SLIP FORMING IS USED.

THE TOP SURFACE OF THE END BENT CAP AND WINGS, EXCEPT THE BEARING AREA AND THE AREA OUTSIDE THE EDGE OF SUPERSTRUCTURE, SHALL BE RAKED TO A DEPTH OF 1/4".

PROJECT NO. R-2582A
NORTHAMPTON COUNTY
STATION: 192+85.76 -L-

SHEET 3 OF 3

ENGINEER OF RECORD: 3/26/2019
NORTH CAROLINA PROFESSIONAL SEAL 37400 ENGINEER GREGORY M. GILLAND
Docusigned by: Gregory M. Gilland
A90A9B0E52D4B...
WETHERILL ENGINEERING
1223 Jones Franklin Rd.
Raleigh, N.C. 27606
Bus: 919 851 8077
Fax: 919 851 8107
LICENSE NO. F-0377

STATE OF NORTH CAROLINA
DEPARTMENT OF TRANSPORTATION
RALEIGH

SUBSTRUCTURE
END BENT No. 1
(LEFT LANE)

REVISIONS						SHEET NO.
NO.	BY:	DATE:	NO.	BY:	DATE:	S3-26
1			3			TOTAL SHEETS
2			4			38

DRAWN BY : D. HODGE DATE : 11/18
CHECKED BY : G.M. GILLAND DATE : 11/18

DOCUMENT NOT CONSIDERED FINAL UNLESS ALL SIGNATURES COMPLETED

P:\2018\181270 2 R-2582A\Structures\Revision (Site 2)\Site 2\DGN\LEFT LANE\R2582A_SMU_ EB_650128rev.dgn
3/25/2019 8:08:53 AM

DocuSign Envelope ID: 055690B4-FFE3-441E-B1AB-BA43025BCD9B

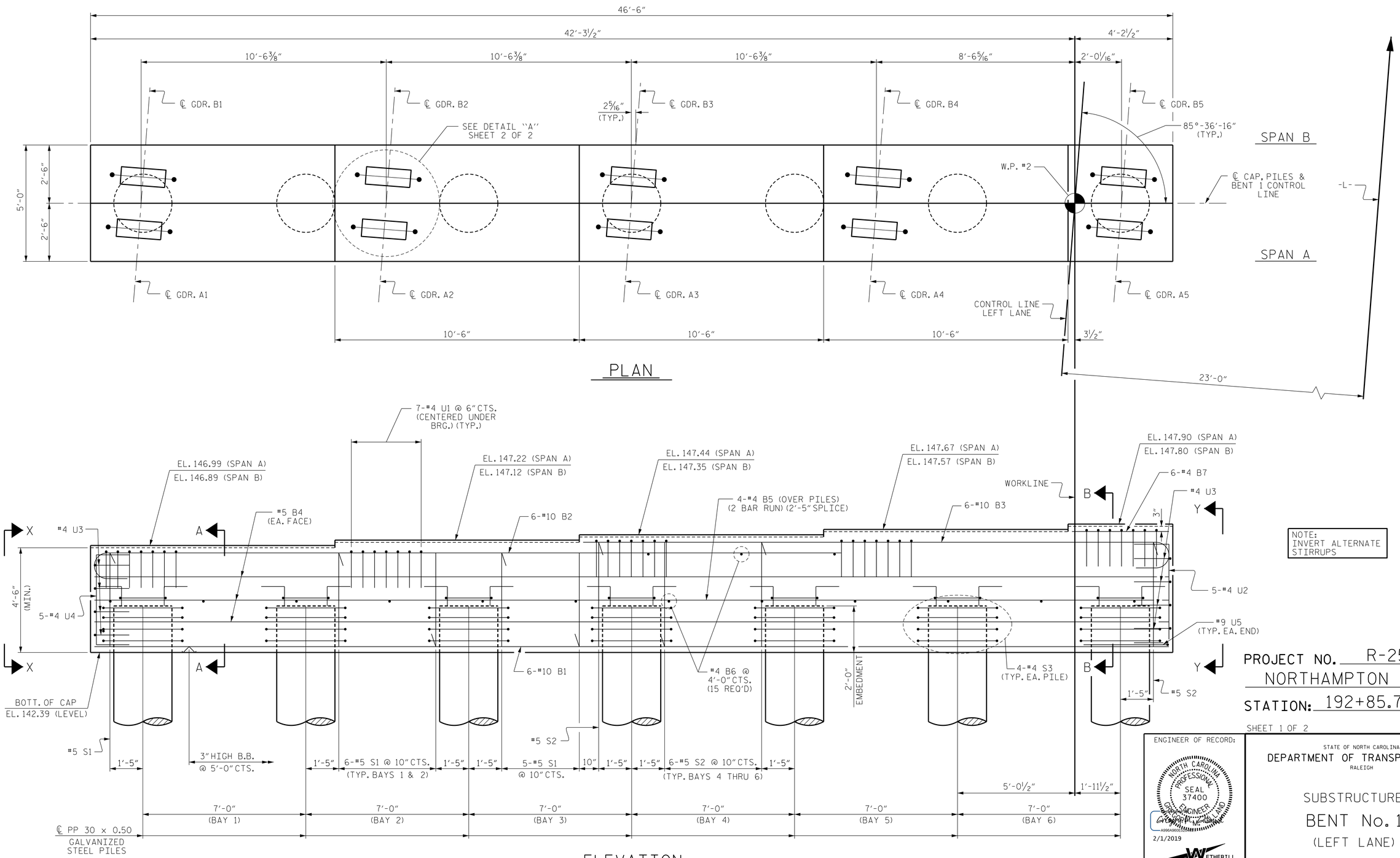

NOTE:
INVERT ALTERNATE STIRRUPS

FOR STEEL PIPE PILE REINFORCING STEEL, CONCRETE QUANTITIES & SPLICE DETAIL, SEE "30" STEEL PIPE PILE" STANDARD, FOR SECTION A-A, SECTION B-B AND DETAIL "A", SEE SHEET 2 OF 2

PROJECT NO. R-2582A
NORTHAMPTON COUNTY
STATION: 192+85.76 -L-

SHEET 1 OF 2

ENGINEER OF RECORD:
NORTH CAROLINA PROFESSIONAL SEAL 37400 CIVIL ENGINEER GREGORY M. GILLAND
A0904A0A0E2E7E
2/1/2019

WETHERILL ENGINEERING
1223 Jones Franklin Rd.
Raleigh, N.C. 27606
Bus: 919 851 8077
Fax: 919 851 8107
LICENSE NO. F-0377

STATE OF NORTH CAROLINA
DEPARTMENT OF TRANSPORTATION
RALEIGH

SUBSTRUCTURE
BENT No. 1
(LEFT LANE)

REVISIONS						SHEET NO.
NO.	BY:	DATE:	NO.	BY:	DATE:	S3-27
1			3			TOTAL SHEETS
2			4			38

DRAWN BY : D. HODGE DATE : 11/18
CHECKED BY : G.M. GILLAND DATE : 12/18

DOCUMENT NOT CONSIDERED FINAL UNLESS ALL SIGNATURES COMPLETED

P:\2018\18127.02 R-2582A\Structures\Revision (Site 2)\Site 2\DGN\LEFT LANE\R2582A_SMU_ BT_650128rev.dgn
1/31/2019 11:40:17 AM

DocuSign Envelope ID: 055690B4-FFE3-441E-B1AB-BA43025BCD9B

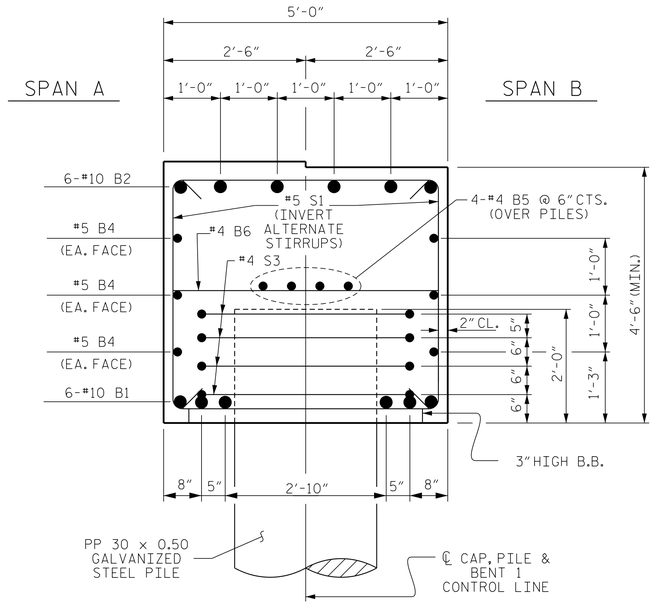

SECTION A-A

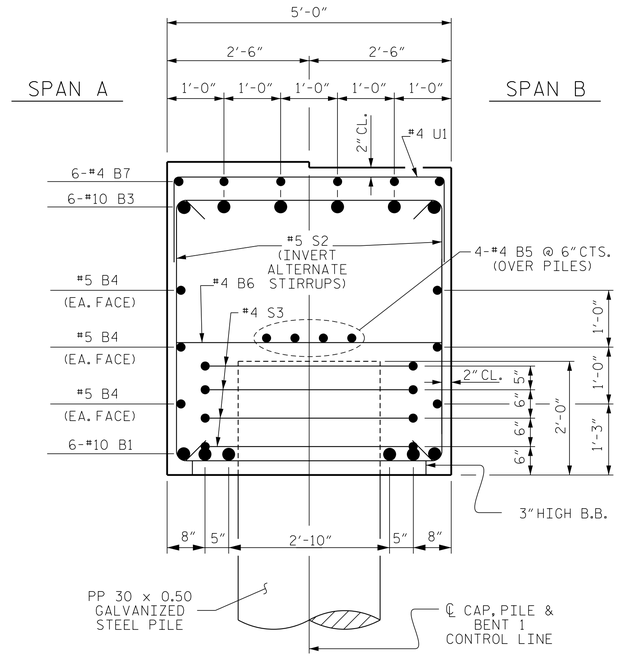

SECTION B-B

BAR TYPES

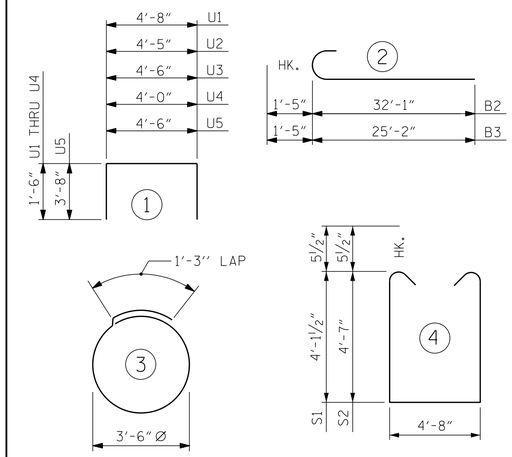

ALL BAR DIMENSIONS ARE OUT TO OUT.

BILL OF MATERIAL

BENT No. 1

BAR	NO.	SIZE	TYPE	LENGTH	WEIGHT
B1	6	#10	STR	46'-2"	1192
B2	6	#10	2	33'-6"	865
B3	6	#10	2	26'-7"	686
B4	6	#5	STR	46'-2"	289
B5	8	#4	STR	24'-4"	130
B6	15	#4	STR	4'-8"	47
B7	6	#4	STR	4'-2"	17
S1	18	#5	4	13'-10"	260
S2	20	#5	4	14'-9"	308
S3	28	#4	3	12'-3"	229
U1	35	#4	1	7'-8"	179
U2	5	#4	1	7'-5"	25
U3	8	#4	1	7'-6"	40
U4	5	#4	1	7'-0"	23
U5	2	#9	1	11'-10"	80

REINFORCING STEEL 4,370 LBS.

CLASS A CONCRETE 40.0 C.Y.

NOTE:
THE VOLUME OF CONCRETE DISPLACED BY THE PIPE PILES HAS BEEN DEDUCTED FROM THE TOTAL.

PP 30" x 0.50 GALVANIZED STEEL PILES
NO: 7 LIN. FT.= 819

PILE REDRIVES 4 EA.

PILE DRIVING EQUIPMENT SETUP FOR PP 30 x 0.50 STEEL PILES 7 EA.

NOTES:

STIRRUPS AND "U" BARS IN CAP MAY BE SHIFTED AS NECESSARY TO CLEAR ANCHOR BOLTS.

GALVANIZE THE TOP 58 FEET OF EACH BENT No. 1 PILE IN ACCORDANCE WITH SECTION 1076 OF THE STANDARD SPECIFICATIONS.

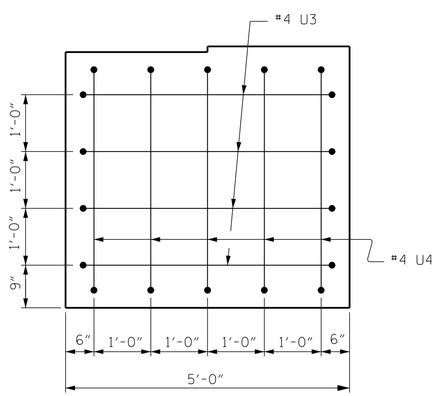

VIEW X-X

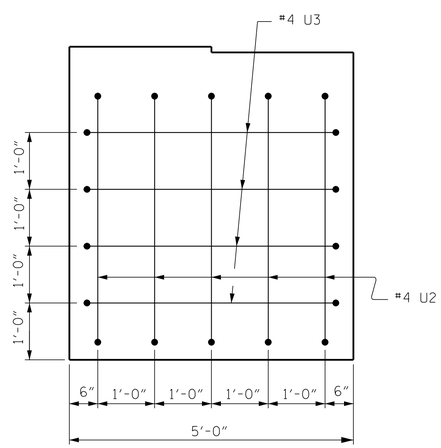

VIEW Y-Y

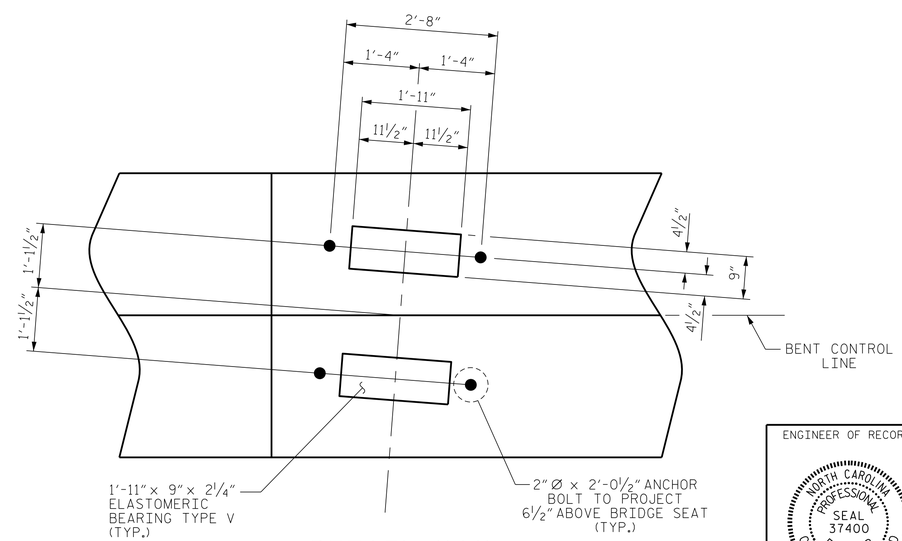

DETAIL "A"

(TYP. EACH GIRDER)

PROJECT NO. R-2582A
NORTHAMPTON COUNTY
STATION: 192+85.76 -L-

SHEET 2 OF 2

ENGINEER OF RECORD:
NORTH CAROLINA PROFESSIONAL SEAL 37400 ENGINEER
2/1/2019

WETHERILL ENGINEERING
1223 Jones Franklin Rd.
Raleigh, N.C. 27606
Bus: 919 851 8077
Fax: 919 851 8107
LICENSE NO. F-0377

STATE OF NORTH CAROLINA
DEPARTMENT OF TRANSPORTATION
RALEIGH

SUBSTRUCTURE
BENT No. 1
(LEFT LANE)

REVISIONS						SHEET NO.
NO.	BY:	DATE:	NO.	BY:	DATE:	S3-28
1			3			TOTAL SHEETS
2			4			38

DRAWN BY : D. HODGE DATE : 11/18
CHECKED BY : G.M. GILLAND DATE : 12/18

DOCUMENT NOT CONSIDERED FINAL UNLESS ALL SIGNATURES COMPLETED

P:\2018\18127.02_R-2582A\Structures\Revision (Site 2)\Site 2\DGN\LEFT LANE\R2582A_SMU_ BT_650128rev.dgn
1/31/2019 11:40:57 AM

DocuSign Envelope ID: 055690B4-FFE3-441E-B1AB-BA43025BCD9B

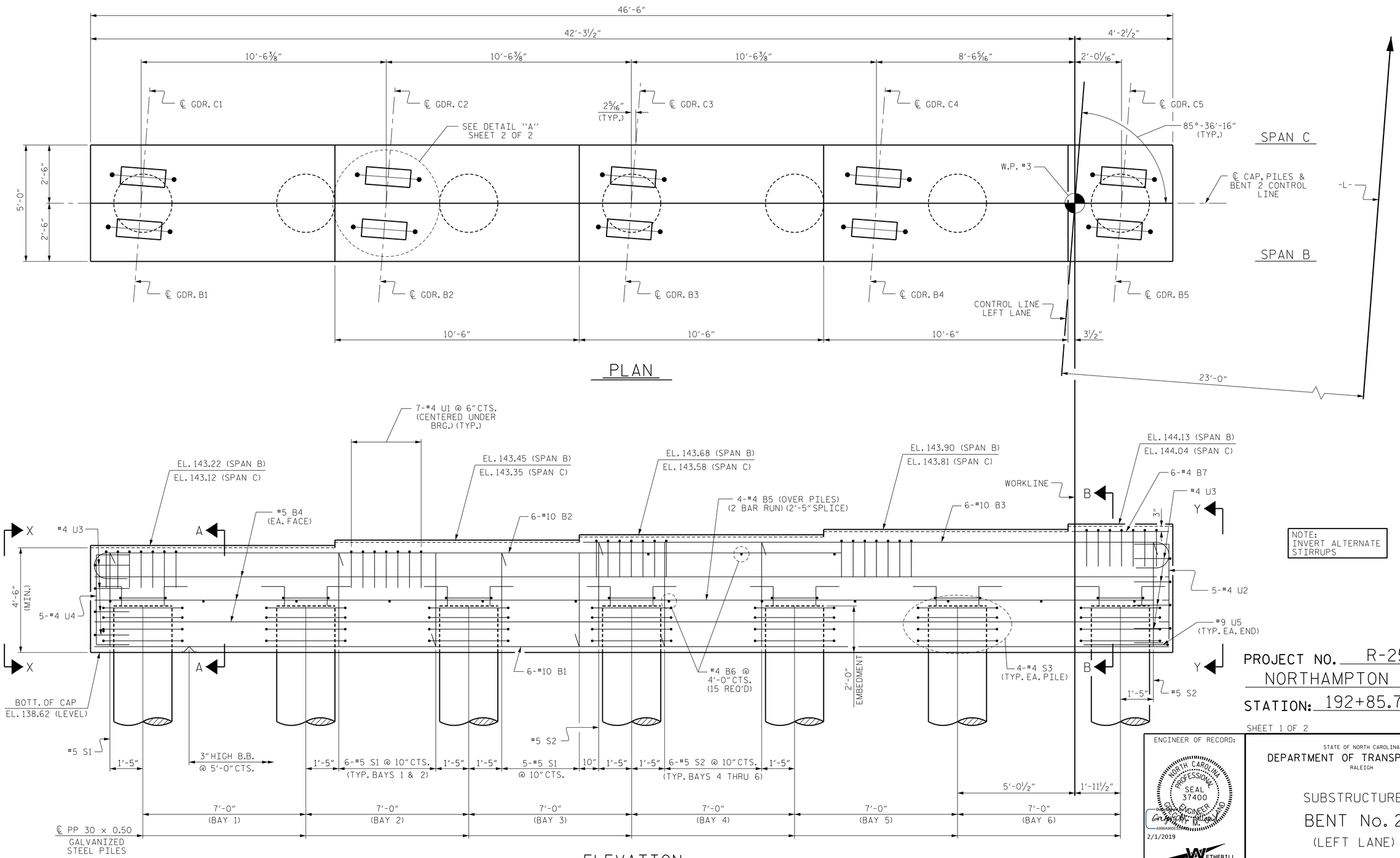

NOTE:
INVERT ALTERNATE STIRRUPS

FOR STEEL PIPE PILE REINFORCING STEEL, CONCRETE QUANTITIES & SPLICE DETAIL, SEE "30" STEEL PIPE PILE" STANDARD, FOR SECTION A-A, SECTION B-B AND DETAIL "A", SEE SHEET 2 OF 2

PROJECT NO. R-2582A
NORTHAMPTON COUNTY
STATION: 192+85.76 -L-

SHEET 1 OF 2

ENGINEER OF RECORD:
NORTH CAROLINA PROFESSIONAL SEAL 37400 ENGINEER
G.M. GILLAND
A996A9C0B
2/1/2019

WETHERILL ENGINEERING
1223 Jones Franklin Rd.
Raleigh, N.C. 27606
Bus: 919 851 8077
Fax: 919 851 8107
LICENSE NO. F-0377

STATE OF NORTH CAROLINA
DEPARTMENT OF TRANSPORTATION
RALEIGH

SUBSTRUCTURE
BENT No. 2
(LEFT LANE)

REVISIONS						SHEET NO.
NO.	BY:	DATE:	NO.	BY:	DATE:	S3-29
1			3			TOTAL SHEETS
2			4			38

DRAWN BY : D. HODGE DATE : 1/19
CHECKED BY : G.M. GILLAND DATE : 1/19

DOCUMENT NOT CONSIDERED FINAL UNLESS ALL SIGNATURES COMPLETED

P:\2018\18127.02 R-2582A\Structures\Revision (Site 2)\Site 2\DGN\LEFT LANE\R2582A_SMU_ BT_650128rev.dgn
1/31/2019 11:41:33 AM

DocuSign Envelope ID: 055690B4-FFE3-441E-B1AB-BA43025BCD9B

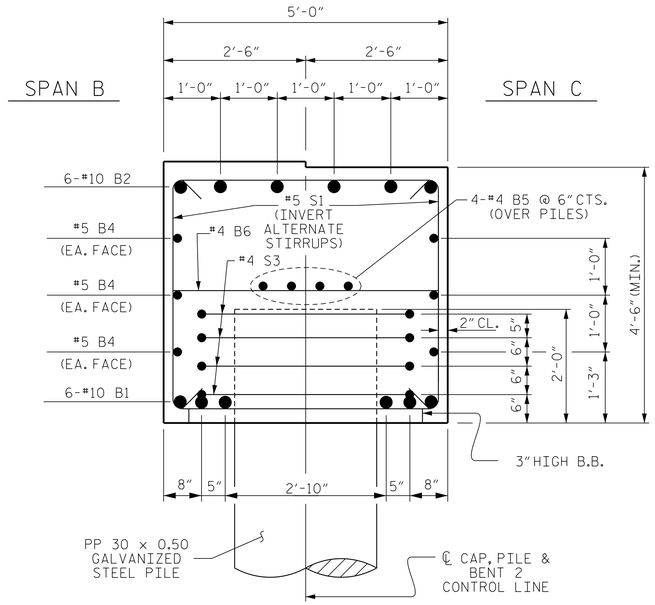

SECTION A-A

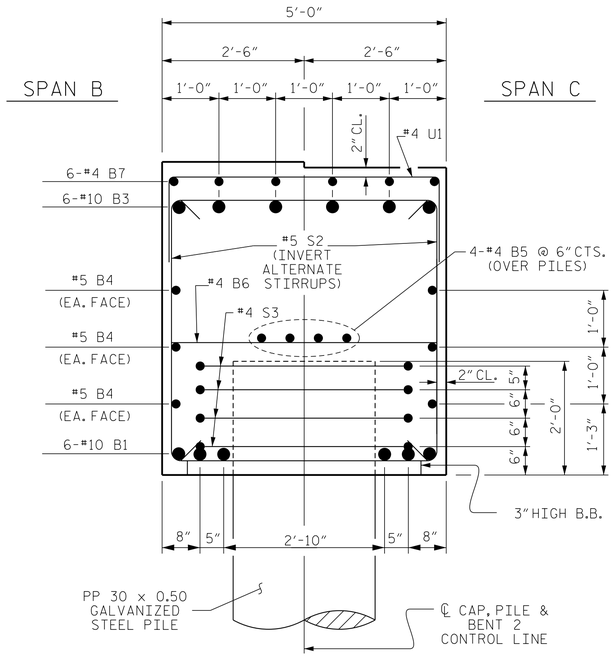

SECTION B-B

BAR TYPES

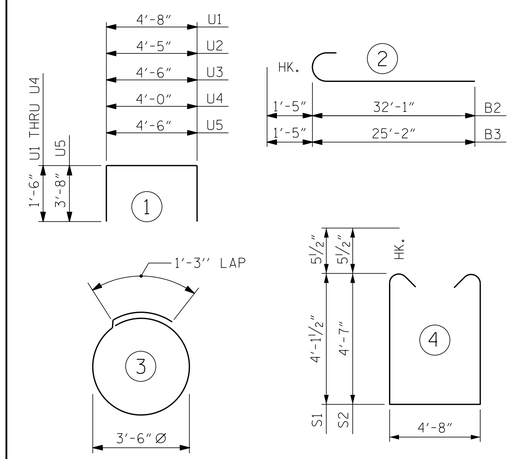

ALL BAR DIMENSIONS ARE OUT TO OUT.

BILL OF MATERIAL

BENT No. 2

BAR	NO.	SIZE	TYPE	LENGTH	WEIGHT
B1	6	#10	STR	46'-2"	1192
B2	6	#10	2	33'-6"	865
B3	6	#10	2	26'-7"	686
B4	6	#5	STR	46'-2"	289
B5	8	#4	STR	24'-4"	130
B6	15	#4	STR	4'-8"	47
B7	6	#4	STR	4'-2"	17
S1	18	#5	4	13'-10"	260
S2	20	#5	4	14'-9"	308
S3	28	#4	3	12'-3"	229
U1	35	#4	1	7'-8"	179
U2	5	#4	1	7'-5"	25
U3	8	#4	1	7'-6"	40
U4	5	#4	1	7'-0"	23
U5	2	#9	1	11'-10"	80

REINFORCING STEEL 4,370 LBS.

CLASS A CONCRETE 40.0 C.Y.

NOTE:
THE VOLUME OF CONCRETE DISPLACED BY THE PIPE PILES HAS BEEN DEDUCTED FROM THE TOTAL.

PP 30" x 0.50 GALVANIZED STEEL PILES
NO: 7 LIN. FT.= 854

PILE REDRIVES 4 EA.

PILE DRIVING EQUIPMENT SETUP FOR PP 30 x 0.50 STEEL PILES 7 EA.

NOTES:

STIRRUPS AND "U" BARS IN CAP MAY BE SHIFTED AS NECESSARY TO CLEAR ANCHOR BOLTS.

GALVANIZE THE TOP 54 FEET OF EACH BENT No. 2 PILE IN ACCORDANCE WITH SECTION 1076 OF THE STANDARD SPECIFICATIONS.

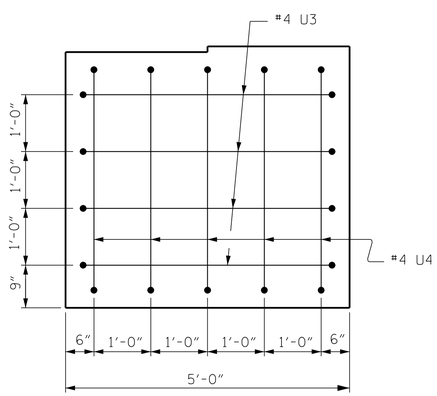

VIEW X-X

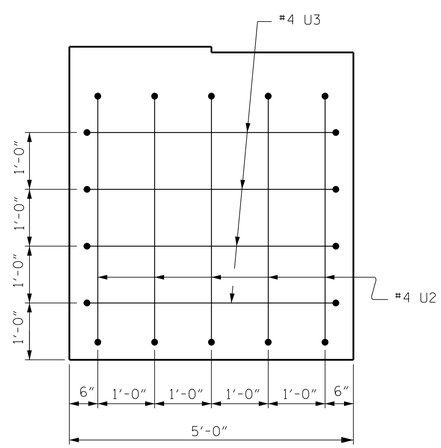

VIEW Y-Y

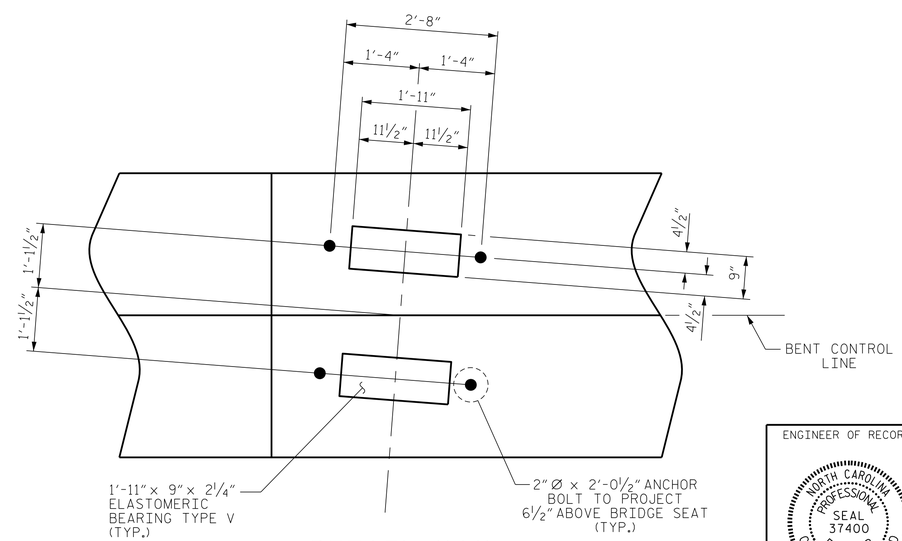

DETAIL "A"

(TYP. EACH GIRDER)

PROJECT NO. R-2582A
NORTHAMPTON COUNTY
STATION: 192+85.76 -L-

SHEET 2 OF 2

ENGINEER OF RECORD:
NORTH CAROLINA PROFESSIONAL SEAL 37400 ENGINEER G.M. GILLAND
2/1/2019

WETHERILL ENGINEERING
1223 Jones Franklin Rd.
Raleigh, N.C. 27606
Bus: 919 851 8077
Fax: 919 851 8107
LICENSE NO. F-0377

STATE OF NORTH CAROLINA
DEPARTMENT OF TRANSPORTATION
RALEIGH

SUBSTRUCTURE
BENT No. 2
(LEFT LANE)

REVISIONS						SHEET NO.
NO.	BY:	DATE:	NO.	BY:	DATE:	S3-30
1			3			TOTAL SHEETS
2			4			38

DRAWN BY : D. HODGE DATE : 1/19
CHECKED BY : G.M. GILLAND DATE : 1/19

DOCUMENT NOT CONSIDERED FINAL UNLESS ALL SIGNATURES COMPLETED

P:\2018\18127.02 R-2582A\Structures\Revision (Site 2)\Site 2\DGN\LEFT LANE\R2582A_SMU_ BT_650128rev.dgn
1/31/2019 11:42:17 AM

DocuSign Envelope ID: 055690B4-FFE3-441E-B1AB-BA43025BCD9B

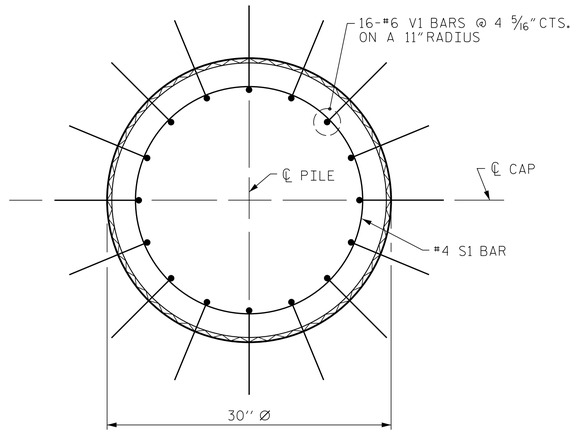

PLAN

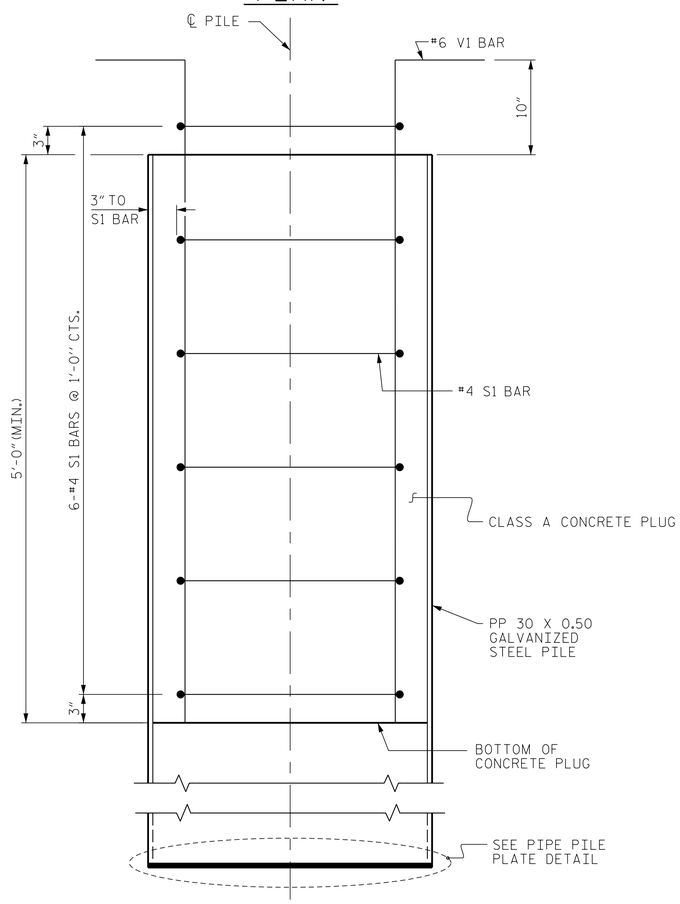

ELEVATION

PP 30 X 0.50 GALVANIZED STEEL PILE

(CLOSED END)

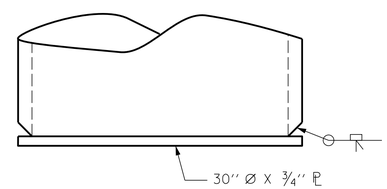

PIPE PILE PLATE DETAIL

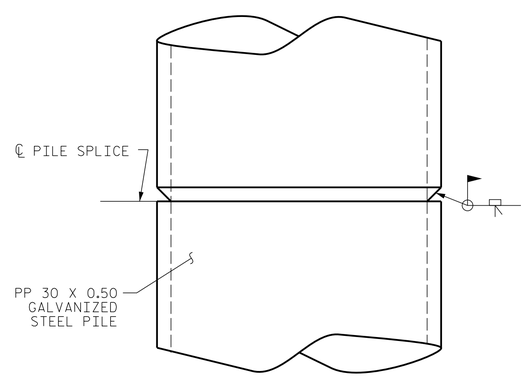

PIPE PILE SPLICE DETAIL

NOTES

PIPE PILES SHALL BE IN ACCORDANCE WITH SECTION 1084 OF THE STANDARD SPECIFICATIONS.

GALVANIZE STEEL PIPE PILES IN ACCORDANCE WITH SECTION 1076 OF THE STANDARD SPECIFICATIONS UNLESS METALLIZING IS REQUIRED. GALVANIZING OR METALLIZING PIPE PILE PLATES IS NOT REQUIRED.

PIPE PILE PLATES, SHALL BE IN ACCORDANCE WITH SECTION 450 OF THE STANDARD SPECIFICATIONS.

REMOVE AND REPLACE OR REPAIR TO THE SATISFACTION OF THE ENGINEER PILES THAT ARE DAMAGED, DEFORMED OR COLLAPSED DURING INSTALLATION OR DRIVING.

PILE SPLICES SHALL BE IN ACCORDANCE WITH THE STANDARD SPECIFICATIONS AND AWS D1.1.

FOR CLOSED END PIPE PILES, REMOVE ALL SOIL AND WATER FROM INSIDE THE PILES JUST PRIOR TO PLACING REINFORCING STEEL AND CONCRETE FOR THE CONCRETE PLUG.

FORM THE CONCRETE PLUG SUCH THAT THE REINFORCING STEEL OR CONCRETE DOES NOT MOVE AND THE CLEARANCE FROM THE REINFORCING STEEL TO THE INSIDE OF THE PILE IS MAINTAINED AFTER CONCRETE PLACEMENT. DO NOT PLACE CONCRETE IN THE BENT CAP UNTIL THE CONCRETE PLUG HAS ATTAINED A MINIMUM COMPRESSIVE STRENGTH OF 1500 PSI.

THE REINFORCING STEEL, CLASS A CONCRETE, AND GALVANIZING ARE CONSIDERED INCIDENTAL TO THE CONTRACT UNIT PRICE BID PER LINEAR FOOT FOR PP 30 X 0.50 GALVANIZED STEEL PILES.

BILL OF MATERIAL FOR ONE PP 30 X 0.50 GALVANIZED STEEL PILE

BAR	NO.	SIZE	TYPE	LENGTH	WEIGHT
S1	6	#4	1	7'-7"	30
V1	16	#6	2	6'-10"	164
REINFORCING STEEL =					194 lbs
CLASS A CONCRETE					
5'-0" MINIMUM PLUG					0.8 CY

BAR TYPES

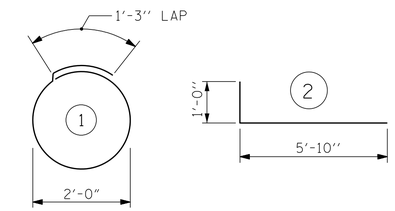

ALL BAR DIMENSIONS ARE OUT TO OUT.

PROJECT NO. R-2582A
NORTHAMPTON COUNTY
STATION: 192+85.76 -L-

ENGINEER OF RECORD:

NORTH CAROLINA PROFESSIONAL SEAL 37400 ENGINEER G. M. GILLAND

DocuSigned by: G. M. Gilland
2/1/2019

WETHERILL ENGINEERING
1223 Jones Franklin Rd.
Raleigh, N.C. 27606
Bus: 919 851 8077
Fax: 919 851 8107
LICENSE NO. F-0377

STATE OF NORTH CAROLINA
DEPARTMENT OF TRANSPORTATION
RALEIGH

STANDARD
30" STEEL PIPE PILE
(LEFT LANE)

REVISIONS						SHEET NO.
NO.	BY:	DATE:	NO.	BY:	DATE:	S3-31
1			3			TOTAL SHEETS
2			4			38

DOCUMENT NOT CONSIDERED FINAL UNLESS ALL SIGNATURES COMPLETED

ASSEMBLED BY : D. HODGE		DATE :	11/18
CHECKED BY : G.M. GILLAND		DATE :	1/19
DRAWN BY : TLA 8/05	REV. 5/1/06R		MAA/KMM
CHECKED BY : GM 9/05	REV. 10/1/11		MAA/GM
	REV. 12/17		MAA/THC

STD. NO. SPP5

P:\2018\18127.02 R-2582A\Structures\Revision (Site 2)\Site 2\DGN\LEFT LANE\R2582A_SMU_ BT_650128rev.dgn
1/31/2019 11:42:59 AM

DocuSign Envelope ID: 224528F0-0F95-4F76-A9C5-38258D5BEEA0

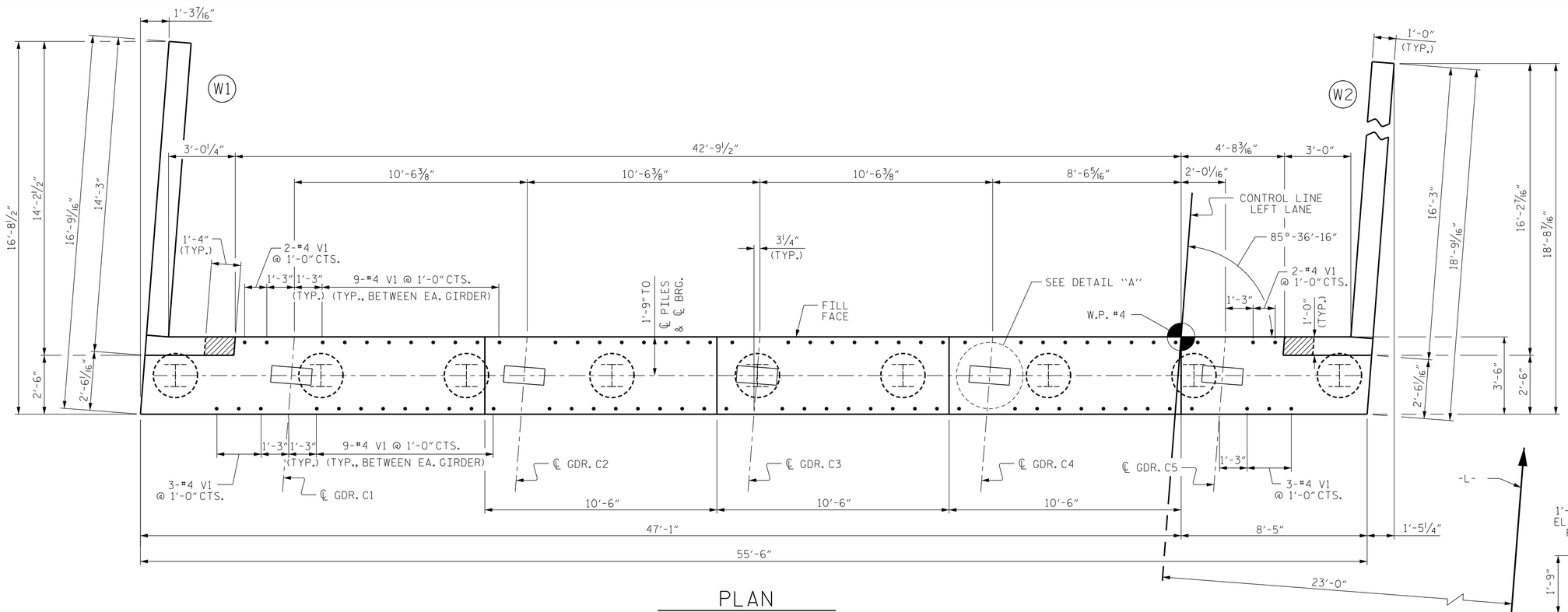

PLAN

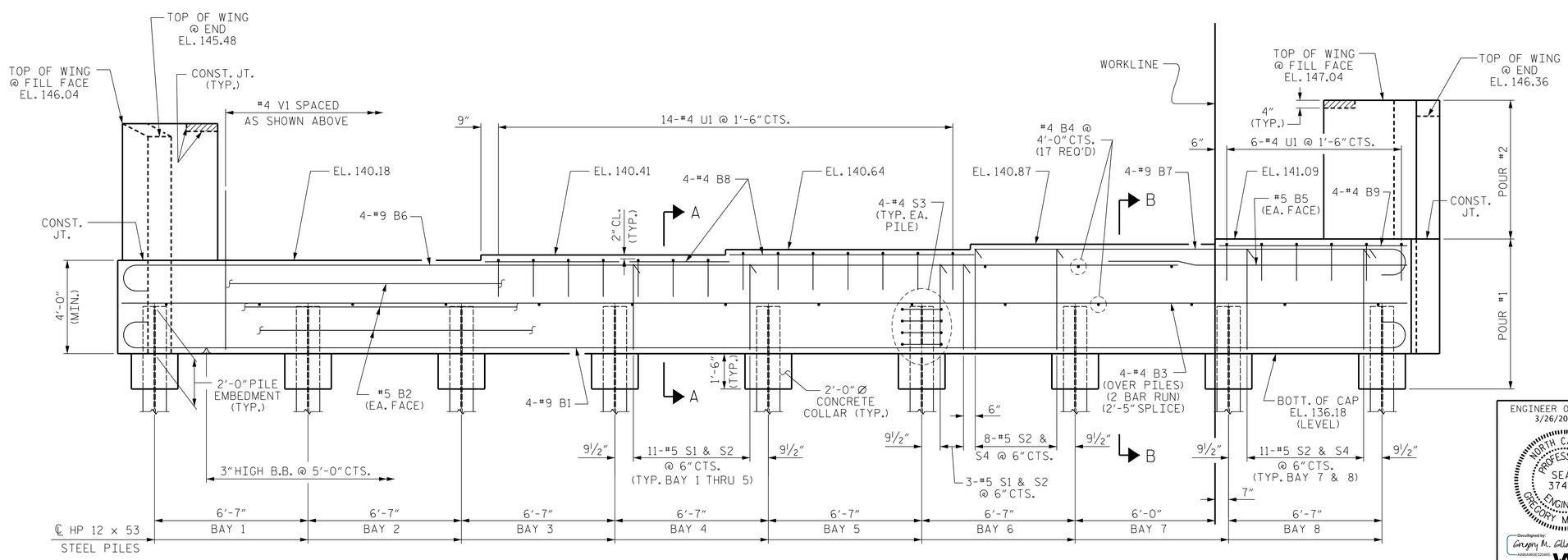

ELEVATION

FOR SECTION A-A & B-B, SEE SHEET 3 OF 3.

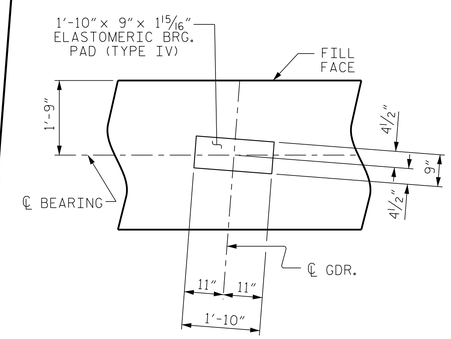

DETAIL "A"

(TYP. EACH GIRDER)

PROJECT NO. R-2582A

NORTHAMPTON COUNTY

STATION: 192+85.76 -L-

SHEET 1 OF 3

ENGINEER OF RECORD: 3/26/2019

NORTH CAROLINA PROFESSIONAL SEAL 37400 ENGINEER GREGORY M. GILLAND

DocuSigned by: Gregory M. Gilland

WETHERILL ENGINEERING

1223 Jones Franklin Rd.
Raleigh, N.C. 27606
Bus: 919 851 8077
Fax: 919 851 8107
LICENSE NO. F-0377

STATE OF NORTH CAROLINA
DEPARTMENT OF TRANSPORTATION
RALEIGH

SUBSTRUCTURE
END BENT No. 2
(LEFT LANE)

REVISIONS								SHEET NO.
NO.	BY:	DATE:	NO.	BY:	DATE:			S3-32
1			3					TOTAL SHEETS
2			4					38

DRAWN BY : D. HODGE DATE : 11/18
CHECKED BY : G.M. GILLAND DATE : 11/18

DOCUMENT NOT CONSIDERED FINAL UNLESS ALL SIGNATURES COMPLETED

P:\2018\18127.02 R-2582A\Structures\Revision (Site 2\Site 2\DGN\LEFT LANE\R2582A_SMU_ EB_650128rev.dgn
3/25/2019 8:09:53 AM

DocuSign Envelope ID: 224528F0-0F95-4F76-A9C5-38258D5BEEA0

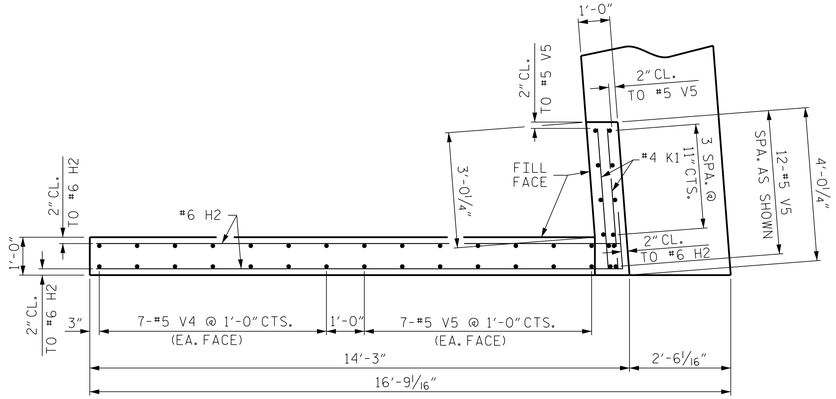

PLAN OF WING - (W1)

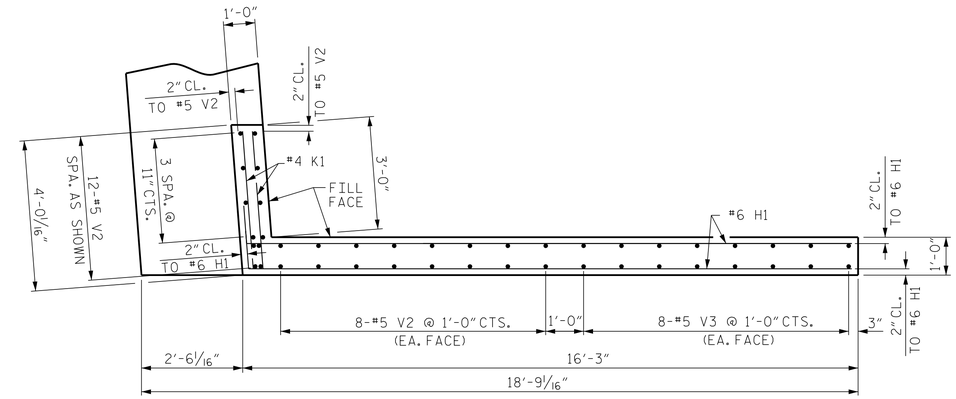

PLAN OF WING - (W2)

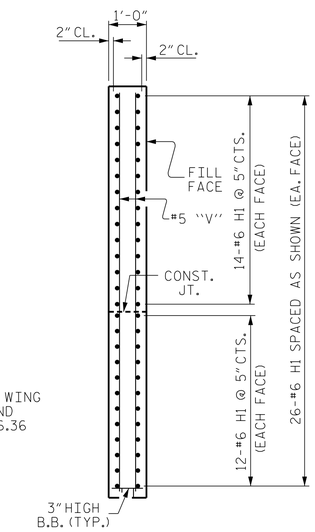

SECTION X-X

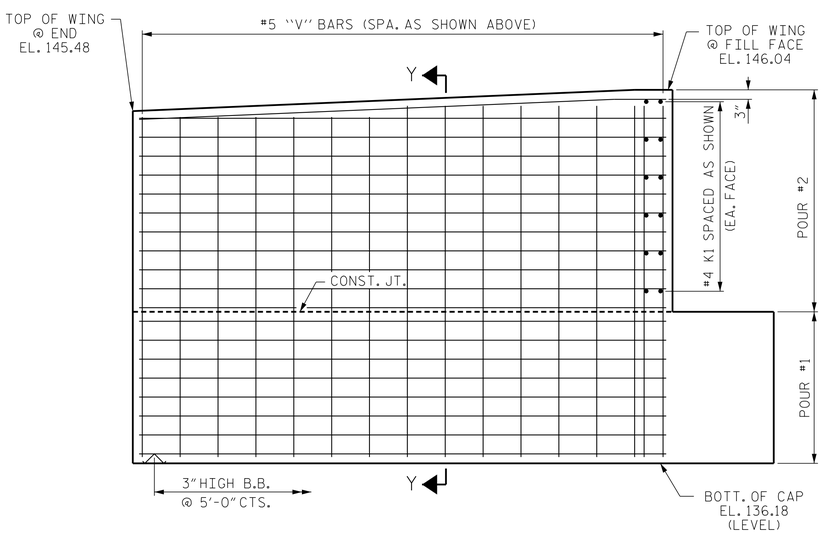

ELEVATION OF WING - (W1)

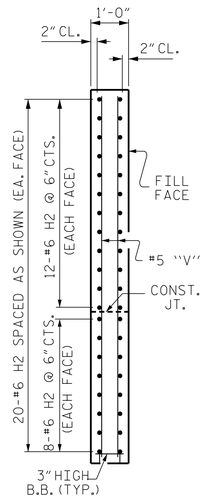

SECTION Y-Y

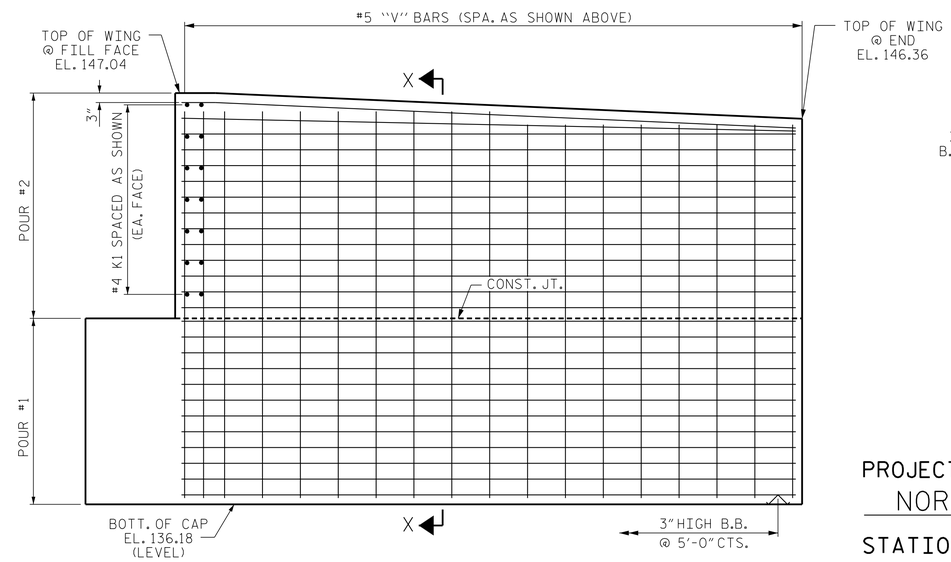

ELEVATION OF WING - (W2)

PROJECT NO. R-2582A

NORTHAMPTON COUNTY

STATION: 192+85.76 -L-

SHEET 2 OF 3

ENGINEER OF RECORD:
3/26/2019

NORTH CAROLINA PROFESSIONAL SEAL 37400 ENGINEER GREGORY M. GILLAND

DocuSigned by: Gregory M. Gilland
A0B0A8B5D5D4B0...

WETHERILL ENGINEERING
1223 Jones Franklin Rd.
Raleigh, N.C. 27606
Bus: 919 851 8077
Fax: 919 851 8107
LICENSE NO. F-0377

STATE OF NORTH CAROLINA
DEPARTMENT OF TRANSPORTATION
RALEIGH

SUBSTRUCTURE

END BENT No. 2

(LEFT LANE)

REVISIONS						SHEET NO.
NO.	BY:	DATE:	NO.	BY:	DATE:	S3-33
1			3			TOTAL SHEETS
2			4			38

DOCUMENT NOT CONSIDERED FINAL UNLESS ALL SIGNATURES COMPLETED

DRAWN BY : D. HODGE DATE : 11/18
CHECKED BY : G.M. GILLAND DATE : 11/18

P:\2018\18127.02 R-2582A\Structures\Revision (Site 2)\Site 2\DGN\LEFT LANE\R2582A_SMU_ EB_650128rev.dgn
3/25/2019 8:10:48 AM

DocuSign Envelope ID: 224528F0-0F95-4F76-A9C5-38258D5BEEA0

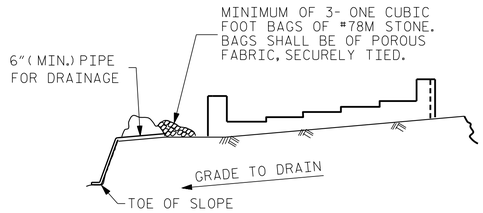

BAGGED STONE AND PIPE SHALL BE PLACED IMMEDIATELY AFTER COMPLETION OF END BENT EXCAVATION. PIPE MAY BE EITHER CONCRETE, CORRUGATED STEEL, CORRUGATED ALUMINUM ALLOY, OR CORRUGATED PLASTIC. PERFORATED PIPE WILL NOT BE ALLOWED.

BAGGED STONE SHALL REMAIN IN PLACE UNTIL THE ENGINEER DIRECTS THAT IT BE REMOVED. THE CONTRACTOR SHALL REMOVE AND DISPOSE OF SILT ACCUMULATIONS AT BAGGED STONE WHEN SO DIRECTED BY THE ENGINEER. BAGS SHALL BE REMOVED AND REPLACED WHENEVER THE ENGINEER DETERMINES THAT THEY HAVE DETERIORATED AND LOST THEIR EFFECTIVENESS.

NO SEPARATE PAYMENT WILL BE MADE FOR THIS WORK AND THE ENTIRE COST OF THIS WORK SHALL BE INCLUDED IN THE UNIT CONTRACT PRICE BID FOR THE SEVERAL PAY ITEMS.

TEMPORARY DRAINAGE AT END BENT

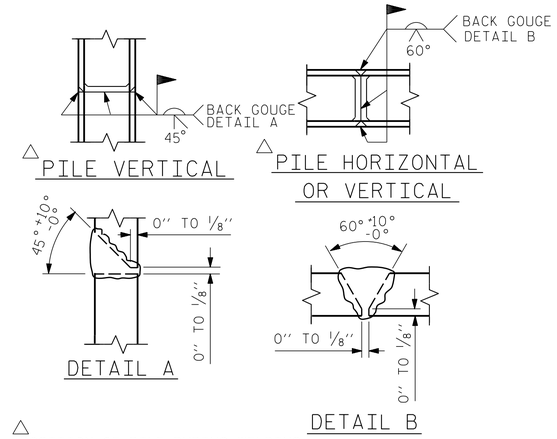

PILE SPLICE DETAILS

BAR TYPES

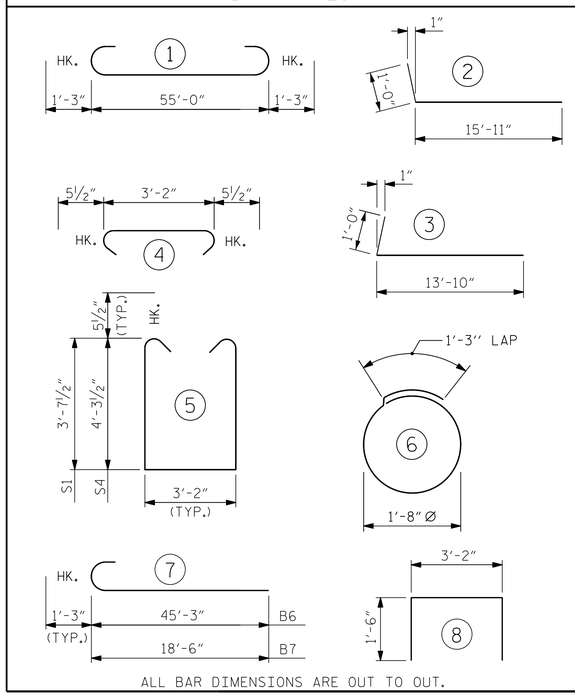

ALL BAR DIMENSIONS ARE OUT TO OUT.

BILL OF MATERIAL

END BENT No. 2

BAR	NO.	SIZE	TYPE	LENGTH	WEIGHT
B1	4	#9	1	57'-6"	782
B2	6	#5	STR	55'-2"	345
B3	8	#4	STR	28'-10"	154
B4	17	#4	STR	3'-2"	36
B5	2	#5	STR	13'-2"	27
B6	4	#9	7	46'-6"	632
B7	4	#9	7	19'-9"	269
B8	8	#4	STR	10'-6"	56
B9	4	#4	STR	8'-1"	22
H1	52	#6	2	16'-11"	1321
H2	40	#6	3	14'-10"	891
K1	26	#4	STR	3'-7"	62
S1	58	#5	5	11'-4"	686
S2	88	#5	4	4'-1"	375
S3	36	#4	6	6'-6"	156
S4	30	#5	5	12'-8"	396
U1	20	#4	8	6'-2"	82
V1	82	#4	STR	6'-8"	365
V2	28	#5	STR	10'-2"	297
V3	16	#5	STR	9'-10"	164
V4	14	#5	STR	8'-11"	130
V5	26	#5	STR	9'-3"	251

REINFORCING STEEL 7,499 LBS.

CLASS A CONCRETE BREAKDOWN

POUR #1	CAP, LOWER PART OF WINGS AND CONCRETE COLLARS	37.9 C.Y.
POUR #2	UPPER PART OF WINGS	7.6 C.Y.
TOTAL CLASS A CONCRETE		45.5 C.Y.

HP 12 X 53 STEEL PILES
NO: 9 900 L.F.

PILE DRIVING EQUIPMENT SETUP FOR HP 12 X 53 STEEL PILES 9 EA.

PILE REDRIVES 5 EA.

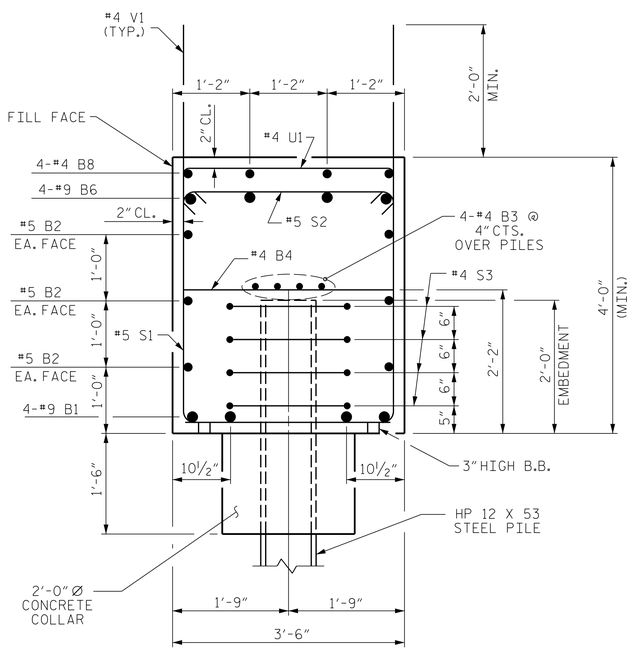

SECTION A-A

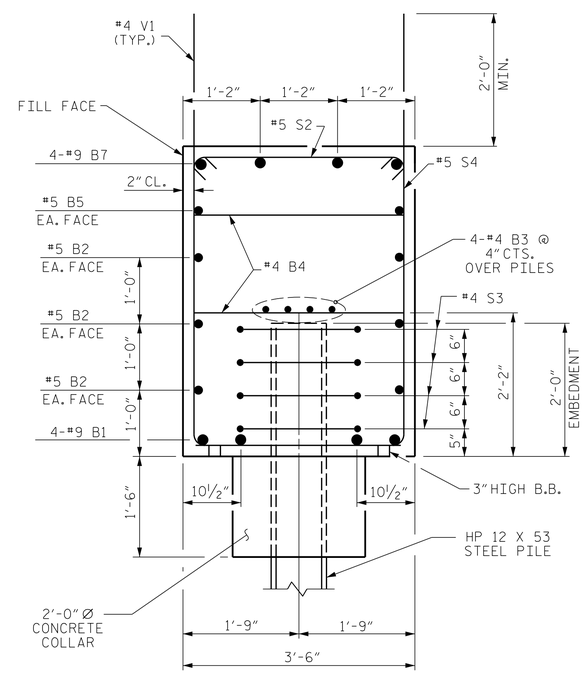

SECTION B-B

NOTES

THE CONCRETE IN THE SHADED AREA OF THE WING SHALL BE POURED AFTER THE BARRIER RAILS ARE CAST IF SLIP FORMING IS USED.

THE TOP SURFACE OF THE END BENT CAP AND WINGS, EXCEPT THE BEARING AREA AND THE AREA OUTSIDE THE EDGE OF SUPERSTRUCTURE, SHALL BE RAKED TO A DEPTH OF 1/4".

PROJECT NO. R-2582A
NORTHAMPTON COUNTY
STATION: 192+85.76 -L-

SHEET 3 OF 3

ENGINEER OF RECORD:
3/26/2019
NORTH CAROLINA PROFESSIONAL SEAL 37400 ENGINEER GREGORY M. GILLAND
DocuSigned by: Gregory M. Gilland
A356A90E52046...
WETHERILL ENGINEERING
1223 Jones Franklin Rd.
Raleigh, N.C. 27606
Bus: 919 851 8077
Fax: 919 851 8107
LICENSE NO. F-0377

STATE OF NORTH CAROLINA
DEPARTMENT OF TRANSPORTATION
RALEIGH

SUBSTRUCTURE
END BENT No. 2
(LEFT LANE)

REVISIONS						SHEET NO.
NO.	BY:	DATE:	NO.	BY:	DATE:	S3-34
1			3			TOTAL SHEETS
2			4			38

DRAWN BY : D. HODGE DATE : 11/18
CHECKED BY : G.M. GILLAND DATE : 11/18

DOCUMENT NOT CONSIDERED FINAL UNLESS ALL SIGNATURES COMPLETED

P:\2018\18127\02_R-2582A\Structures\Revision (Site 2)\Site 2\DGN\LEFT_LANE\R2582A_SMU_EB_650128rev.dgn
3/25/2019 8:11:49 AM

DocuSign Envelope ID: 055690B4-FFE3-441E-B1AB-BA43025BCD9B

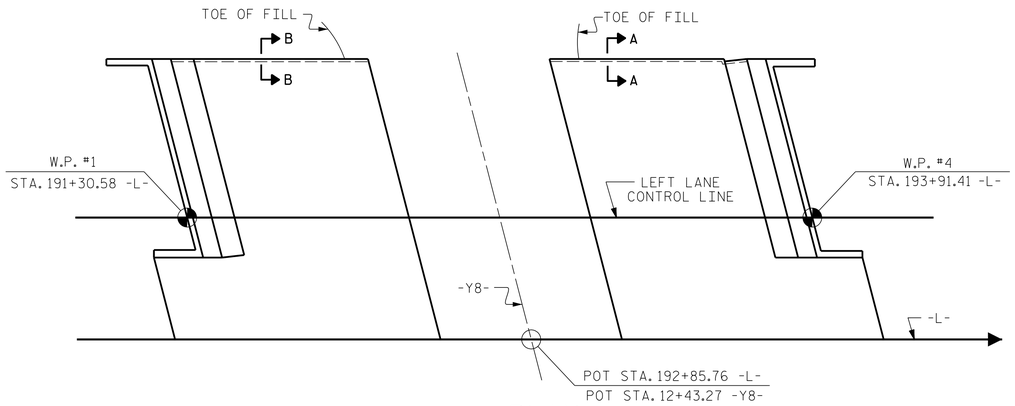

PLAN

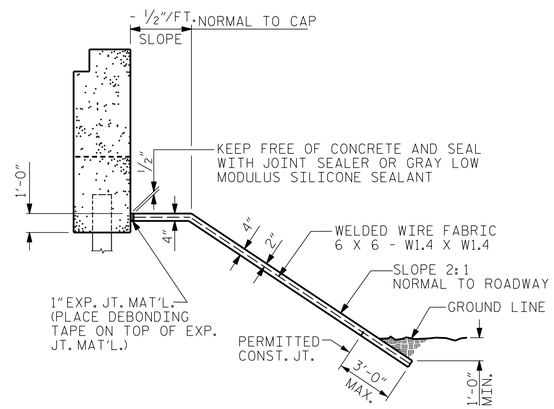

SECTION ALONG ℄ SURVEY WHEN DITCH IS NOT PROVIDED

GENERAL NOTES

SLOPE PROTECTION SHALL BE PLACED UNDER THE ENDS OF THE BRIDGE AS SHOWN IN THE DETAILS. STRAIGHT EDGING WILL NOT BE REQUIRED UNLESS, IN THE OPINION OF THE ENGINEER, VISUAL INSPECTION INDICATES A NEED FOR IT. MEASUREMENT AND PAYMENT SHALL BE AS PRESCRIBED IN SECTION 462 OF THE STANDARD SPECIFICATIONS. FOR BERM WIDTH, SEE GENERAL DRAWING.

SLOPE PROTECTION SHALL CONSIST OF 4" POURED-IN-PLACE CONCRETE PAVING AS SHOWN IN THE DETAILS ON THIS SHEET. CONCRETE SHALL BE CLASS "B". THE CONCRETE SURFACE SHALL BE FLOATED WITH A WOODEN FLOAT AND FINISHED. WELDED WIRE FABRIC REINFORCING SHALL BE 6 X 6 - W1.4 X W1.4, 60" WIDE. SLOPE PROTECTION SHALL BE POURED IN 5' STRIPS AS SHOWN IN THE "POURING DETAIL" WITH 2'-0" LONG #4 BARS PLACED ALONG THE SLOPE BETWEEN STRIPS AT 1'-6" MAXIMUM SPACING. SLOPE PROTECTION MAY BE POURED IN ALTERNATE 4' AND 5' STRIPS AS SHOWN IN THE "OPTIONAL POURING DETAIL" WITH ADJACENT RUNS OF WELDED WIRE FABRIC LAPPING AT LEAST 6". THE COST OF THE WELDED WIRE FABRIC AND #4 BARS, IF USED, SHALL BE INCLUDED IN THE CONTRACT UNIT PRICE BID PER SQUARE YARD FOR SLOPE PROTECTION.

BRIDGE @ STA. 192+85.76 -L-	4 INCH SLOPE PROTECTION	* WELDED WIRE FABRIC 60 INCHES WIDE
	SQUARE YARDS	APPROX. L.F.
END BENT 1	815	1,430
END BENT 2	625	1,095

* QUANTITY SHOWN IS BASED ON 5' POURS.

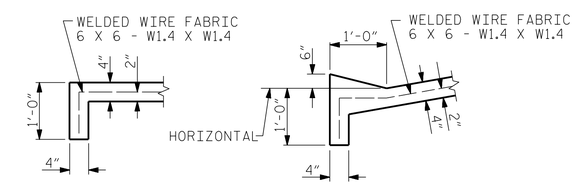

SECTION A-A

SECTION B-B

PROJECT NO. R-2582A

NORTHAMPTON COUNTY

STATION: 192+85.76 -L-

SHEET 1 OF 2

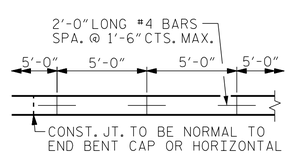

STRIP WIDTHS MAY VARY IN CURVED PORTION.

POURING DETAIL

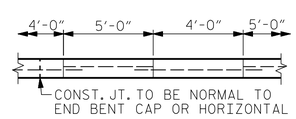

POUR A 4'-0" STRIP FIRST. STRIP WIDTHS MAY VARY IN CURVED PORTION.

OPTIONAL POURING DETAIL

ASSEMBLED BY : D. HODGE		DATE :	10/18
CHECKED BY : G.M. GILLAND		DATE :	12/18
DRAWN BY : ELR 5/92	REV. 12/21/11		MAA/GM
CHECKED BY : GRP 6/92	REV. 1/16		MAA/TMC
	REV. 12/17		MAA/THC

DOCUMENT NOT CONSIDERED FINAL UNLESS ALL SIGNATURES COMPLETED

ENGINEER OF RECORD:

NORTH CAROLINA PROFESSIONAL SEAL 37400 ENGINEER GREGORY M. GILLAND

A096400 2/1/2019

WETHERILL ENGINEERING

1223 Jones Franklin Rd.
Raleigh, N.C. 27606
Bus: 919 851 8077
Fax: 919 851 8107
LICENSE NO. F-0377

STATE OF NORTH CAROLINA
DEPARTMENT OF TRANSPORTATION
RALEIGH

STANDARD

SLOPE PROTECTION DETAILS

(LEFT LANE)

REVISIONS						SHEET NO.
NO.	BY:	DATE:	NO.	BY:	DATE:	S3-35
1			3			TOTAL SHEETS
2			4			38

STD. NO. SP1 (SHT 2)

P:\2018\18127.02 R-2582A\Structures\Revision (Site 2)\Site 2\DGN\LEFT LANE\R2582A_SMU_SP_650128rev.dgn
1/31/2019 11:45:50 AM

DocuSign Envelope ID: 2862EEE0-D568-45AA-8E16-EA956DC50B31

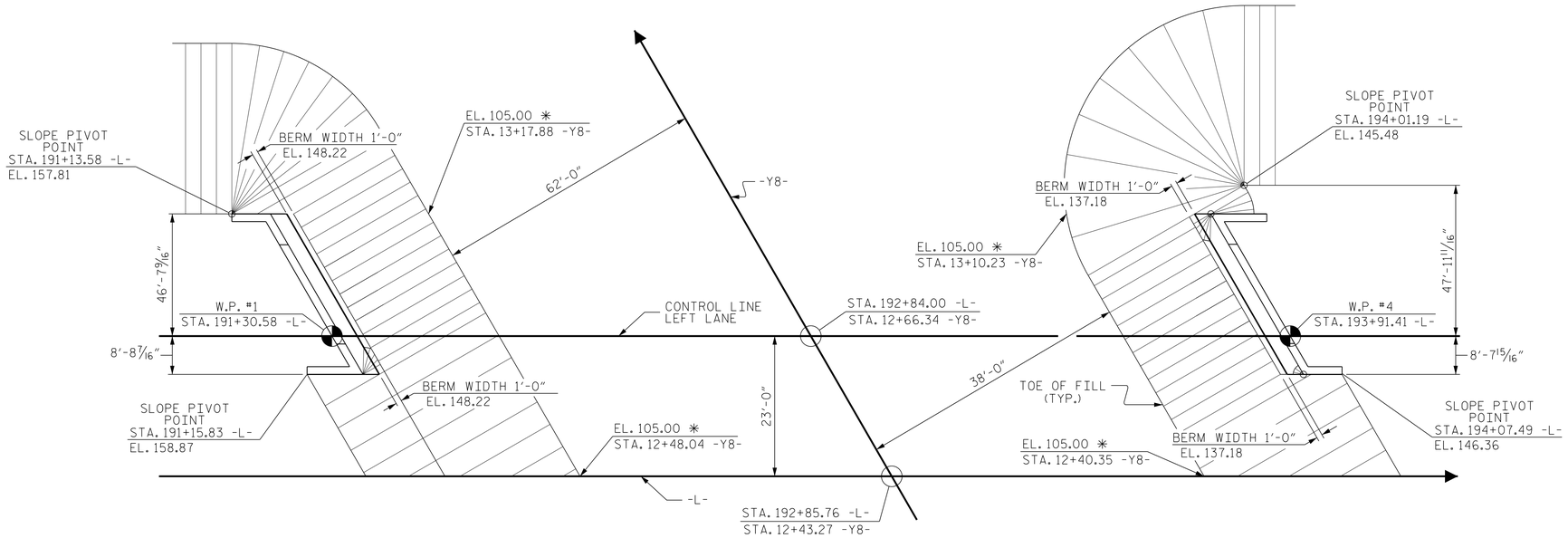

END BENT 1

END BENT 2

✳ ELEVATIONS AT APPROXIMATE EXISTING GROUND IS BASED ON BEST INFORMATION AVAILABLE.

PLAN - GRADING

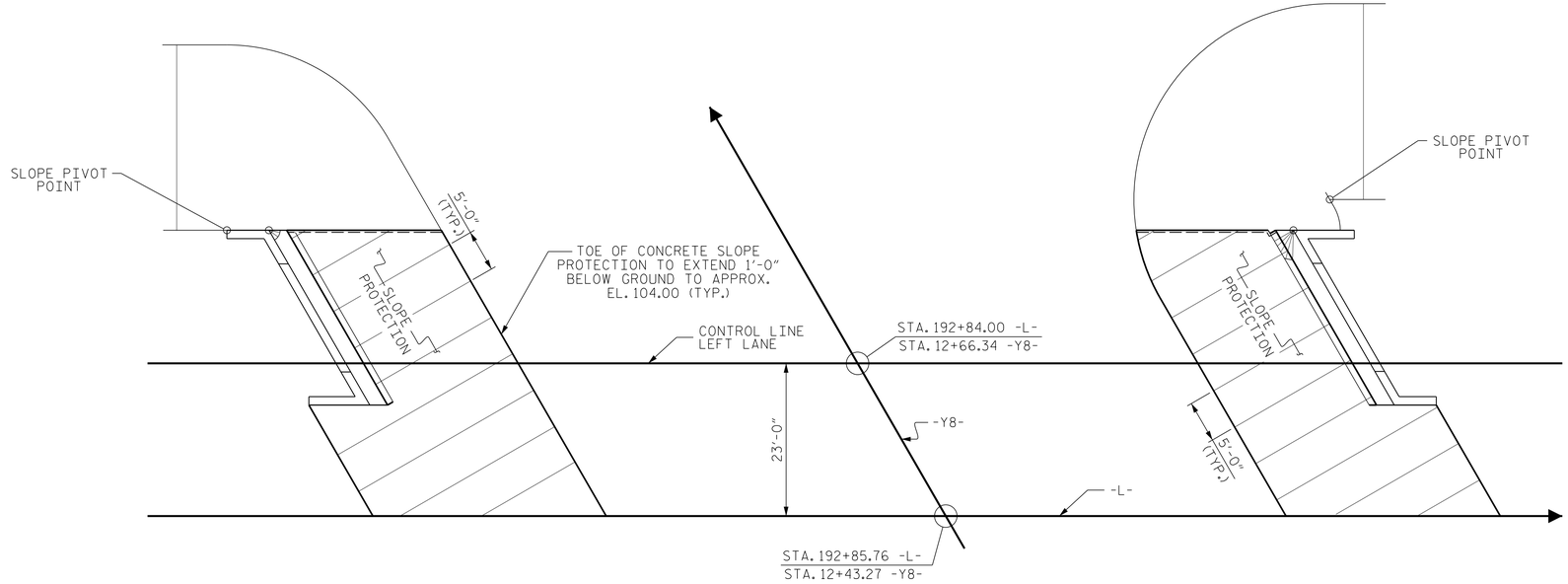

END BENT 1

END BENT 2

PLAN - CONCRETE PLACEMENT

PROJECT NO. R-2582A

NORTHAMPTON COUNTY

STATION: 192+85.76 -L-

SHEET 2 OF 2

ASSEMBLED BY : D. HODGE	DATE : 11/18
CHECKED BY : G.M. GILLAND	DATE : 12/18
DRAWN BY : WJH 10/88	REV. 10/1/11 MAA/GM
CHECKED BY : FCJ 10/88	REV. 1/16 MAA/TMG
	REV. 12/17 MAA/THC

DOCUMENT NOT CONSIDERED FINAL UNLESS ALL SIGNATURES COMPLETED

ENGINEER OF RECORD:
5/2/2019

NORTH CAROLINA PROFESSIONAL SEAL 37400 ENGINEER GREGORY M. GILLAND

DocuSigned by: Gregory M. Gilland
A2D6A9D9D

WETHERILL ENGINEERING
1223 Jones Franklin Rd.
Raleigh, N.C. 27606
Bus: 919 851 8077
Fax: 919 851 8107
LICENSE NO. F-0377

STATE OF NORTH CAROLINA
DEPARTMENT OF TRANSPORTATION
RALEIGH

STANDARD

SLOPE PROTECTION DETAILS

(LEFT LANE)

REVISIONS						SHEET NO.
NO.	BY:	DATE:	NO.	BY:	DATE:	S3-36
1			3			TOTAL SHEETS
2			4			38

STD. NO. SP2 (SHT 2)

P:\2018\18127.02 R-2582A\Structures\Revision (Site 2)\Site 2\DGN\LEFT LANE\R2582A_SMU_ SP_650128rev.dgn
5/2/2019 2:22:49 PM

DocuSign Envelope ID: 055690B4-FFE3-441E-B1AB-BA43025BCD9B

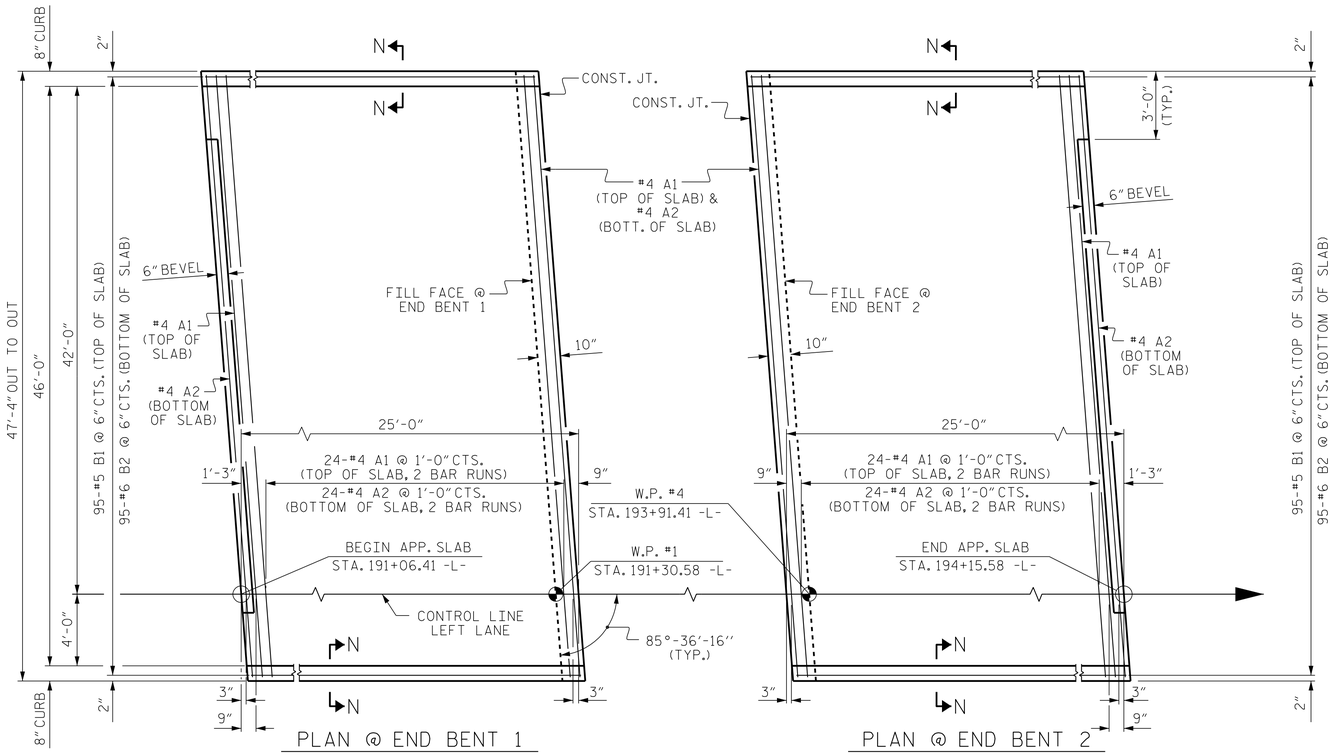

DIMENSIONS SHOWN ARE TYPICAL FOR BOTH APPROACH SLABS

NOTES

APPROACH SLAB SHALL NOT BE CONSTRUCTED PRIOR TO COMPLETION OF THE BRIDGE DECK.

FOR BRIDGE APPROACH FILL INCLUDING GEOTEXTILE, 6" Ø DRAINAGE PIPE, AND SELECT MATERIAL, SEE ROADWAY PLANS.

GEOTEXTILE SHALL BE TYPE 1 IN ACCORDANCE WITH THE STANDARD SPECIFICATIONS SECTION 1056.

SELECT MATERIAL BACKFILL (CLASS V OR CLASS VI) SHALL BE IN ACCORDANCE WITH STANDARD SPECIFICATIONS SECTION 1016.

SELECT MATERIAL BACKFILL IS TO BE CONTINUOUS ALONG FILL FACE OF BACKWALL FROM OUTSIDE EDGE TO OUTSIDE EDGE OF APPROACH SLAB.

FOR THE 6" Ø DRAINAGE PIPE OUTLET(S), SEE ROADWAY STANDARD DRAWINGS.

AREA BETWEEN THE WINGWALL AND APPROACH SLAB SHALL BE GRADED TO DRAIN THE WATER AWAY FROM THE FILL FACE OF THE BRIDGE AND SHALL BE PAVED. SEE ROADWAY PLANS.

THE JOINT OPENING AT THE APPROACH SLAB/DECK INTERFACE SHALL BE SAWED NO MORE THAN 12 HOURS AFTER THE APPROACH SLAB IS CAST. THE JOINT SHALL BE CLEANED OF ALL DEBRIS BEFORE THE SEALANT IS APPLIED. THE JOINT SEALER MATERIAL SHALL CONFORM TO THE REQUIREMENTS OF SECTION 1028-3 OF THE STANDARD SPECIFICATIONS.

AT THE CONTRACTORS OPTION, "TYPE A - ALTERNATE APPROACH FILL" IN LIEU OF "TYPE I - STANDARD APPROACH FILL" MAY BE CONSTRUCTED AT NO ADDITIONAL COST TO THE DEPARTMENT. SEE SHEET 2 OF 2 FOR DETAILS AND NOTES.

BILL OF MATERIAL

FOR ONE APPROACH SLAB (2 REQ'D)

BAR	NO.	SIZE	TYPE	LENGTH	WEIGHT
* A1	52	#4	STR	24'-7"	854
A2	52	#4	STR	24'-6"	851
* B1	95	#5	STR	24'-2"	2395
B2	95	#6	STR	24'-8"	3520
REINFORCING STEEL				LBS.	4371
* EPOXY COATED REINFORCING STEEL				LBS.	3249
CLASS AA CONCRETE				C.Y.	51.1

SPLICE LENGTHS

BAR SIZE	EPOXY COATED	UNCOATED
#4	2'-0"	1'-9"
#5	2'-6"	2'-2"
#6	3'-10"	2'-7"

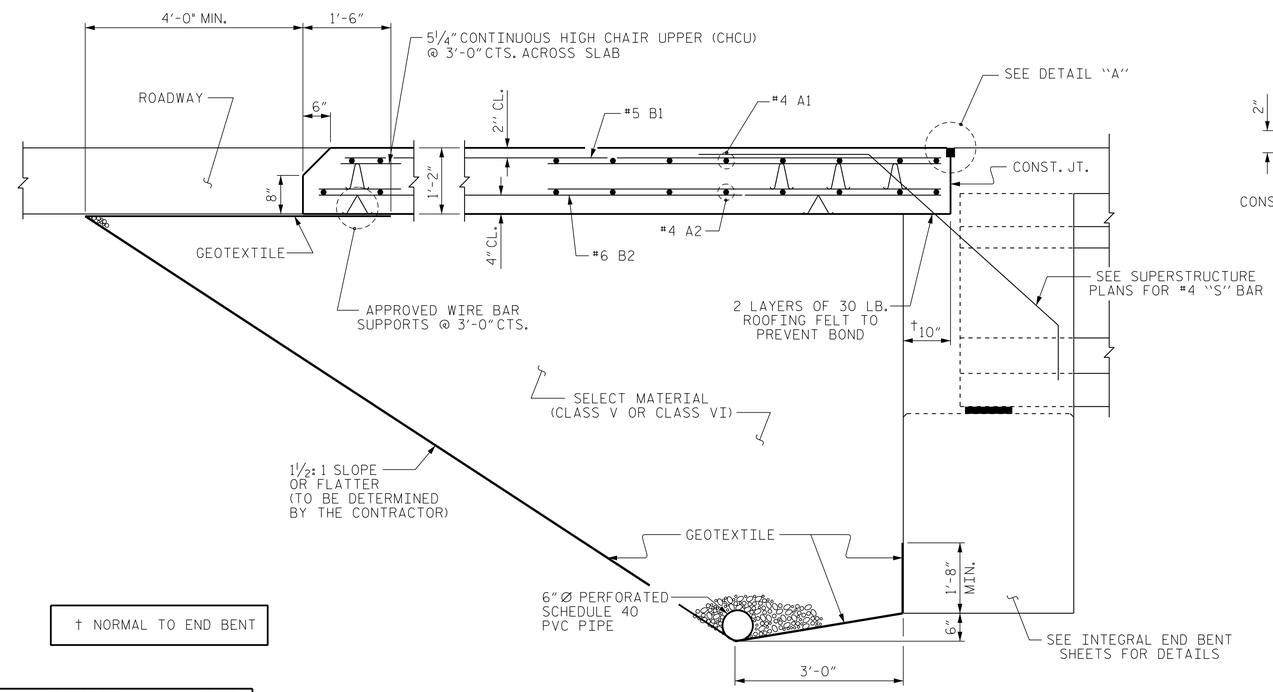

† NORMAL TO END BENT

SECTION THRU SLAB

(TYPE I - STANDARD APPROACH FILL)

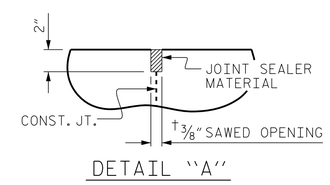

DETAIL "A"

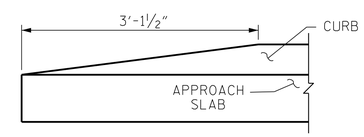

END OF CURB WITHOUT SHOULDER BERM GUTTER

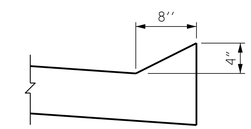

SECTION N-N

PROJECT NO. R-2582A

NORTHAMPTON COUNTY

STATION: 192+85.76 -L-

SHEET 1 OF 2

ENGINEER OF RECORD:

NORTH CAROLINA PROFESSIONAL SEAL 37400 ENGINEER

2/1/2019

WETHERILL ENGINEERING

1223 Jones Franklin Rd.
Raleigh, N.C. 27606
Bus: 919 851 8077
Fax: 919 851 8107
LICENSE NO. F-0377

STATE OF NORTH CAROLINA
DEPARTMENT OF TRANSPORTATION
RALEIGH

STANDARD

BRIDGE APPROACH SLAB FOR INTEGRAL ABUTMENT WITH FLEXIBLE PAVEMENT (LEFT LANE)

REVISIONS						SHEET NO.
NO.	BY:	DATE:	NO.	BY:	DATE:	S3-37
1			3			TOTAL SHEETS
2			4			38

DOCUMENT NOT CONSIDERED FINAL UNLESS ALL SIGNATURES COMPLETED

ASSEMBLED BY : D. HODGE	DATE : 10/18		
CHECKED BY : G.M. GILLAND	DATE : 11/18		
DRAWN BY : TLA 10/05	REV. 12/21/11	MAA/GM	
CHECKED BY : GM 5/06	REV. 6/13	MAA/GM	
	REV. 12/17	MAA/THC	

STD. NO. BAS5 (SHT 1a)

P:\2018\18127.02 R-2582A\Structures\Revision (Site 2)\Site 2\DGN\LEFT LANE\R2582A_SMU_ AS_650128rev.dgn
1/31/2019 11:47:16 AM

DocuSign Envelope ID: 055690B4-FFE3-441E-B1AB-BA43025BCD9B

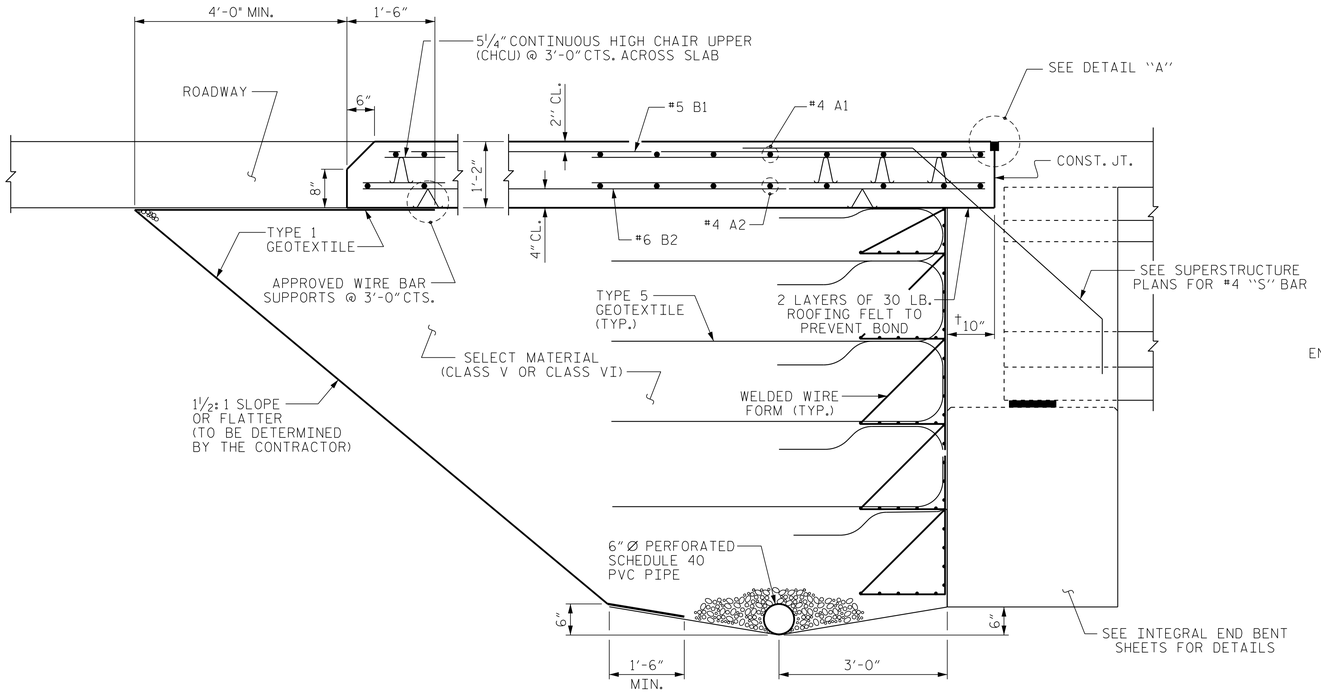

SECTION THRU SLAB

(TYPE A - ALTERNATE APPROACH FILL)

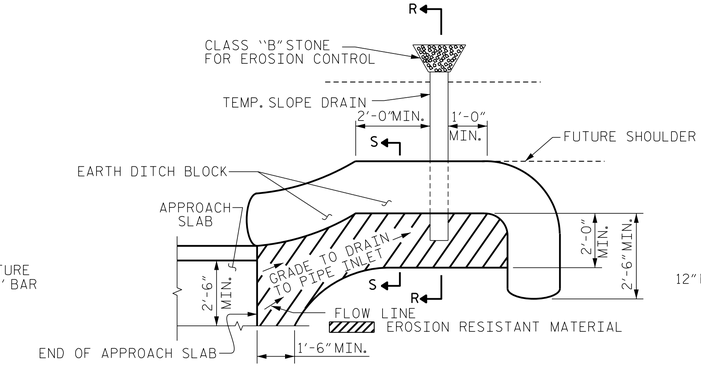

NOTE: IMMEDIATELY AFTER THE CONSTRUCTION OF THE APPROACH SLAB, THE CONTRACTOR SHALL PROVIDE TEMPORARY BERM AND SLOPE DRAIN. CONTRACTOR SHALL GRADE TO PIPE INLET AND PROVIDE EROSION RESISTANT MATERIAL AS SHOWN. THE EROSION RESISTANT MATERIAL SHALL BE EITHER 1) ASPHALT PLANT MIX, TYPE 1 OR TYPE 2, MIN. 2" DEPTH, 2) EROSION CONTROL MAT, OR 3) CONCRETE, AS DIRECTED BY THE ENGINEER. THE SLOPE DRAIN SHALL CONSIST OF A NON-PERFORATED TEMPORARY DRAINAGE PIPE, 12 INCHES IN DIAMETER.

PLAN VIEW

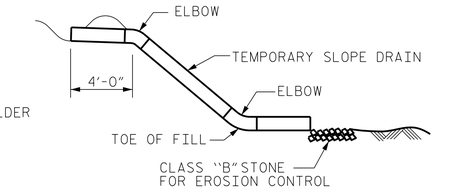

SECTION R-R

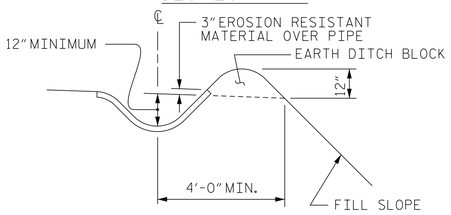

SECTION S-S

TEMPORARY BERM AND SLOPE DRAIN DETAILS

(TO BE USED WHEN SHOULDER BERM GUTTER IS REQUIRED)

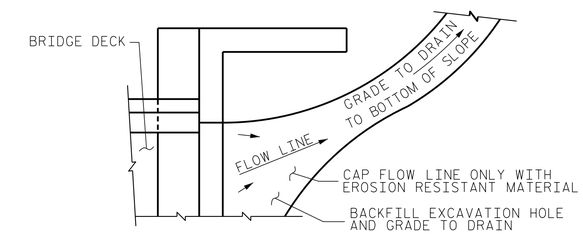

NOTE: IF THE APPROACH SLAB IS NOT CONSTRUCTED IMMEDIATELY AFTER THE BACKFILLING OF THE END BENT EXCAVATION, GRADE TO DRAIN TO THE BOTTOM OF THE SLOPE AND PROVIDE EROSION RESISTANT MATERIAL, SUCH AS FIBERGLASS ROVING OR AS DIRECTED BY THE ENGINEER TO PREVENT SOIL EROSION AND TO PROTECT THE AREA ADJACENT TO THE STRUCTURE. THE CONTRACTOR WILL BE REQUIRED TO REMOVE THESE MATERIALS PRIOR TO CONSTRUCTION OF THE APPROACH SLAB.

TEMPORARY DRAINAGE DETAIL

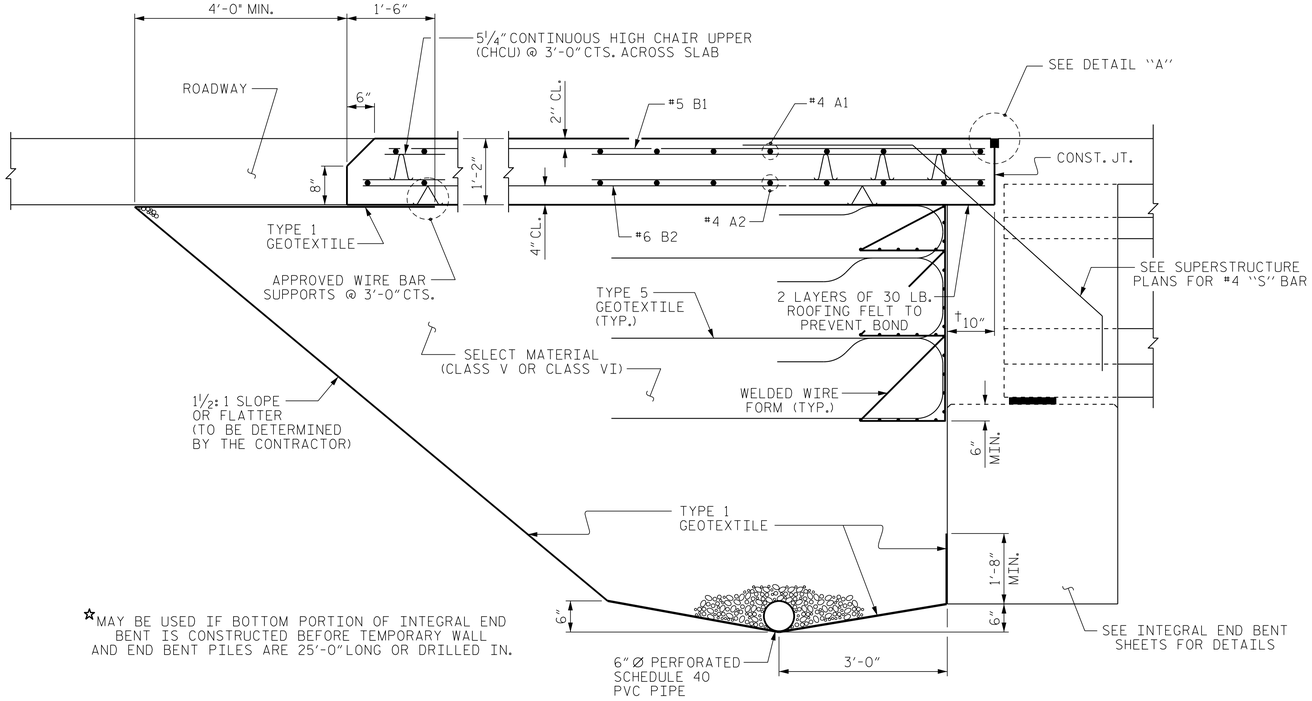

☆MAY BE USED IF BOTTOM PORTION OF INTEGRAL END BENT IS CONSTRUCTED BEFORE TEMPORARY WALL AND END BENT PILES ARE 25'-0" LONG OR DRILLED IN.

SECTION THRU SLAB

☆(TYPE A - ALTERNATE APPROACH FILL)

NOTES

APPROACH SLAB SHALL NOT BE CONSTRUCTED PRIOR TO COMPLETION OF THE BRIDGE DECK.

FOR TEMPORARY GEOTEXTILE WALL INCLUDING GEOTEXTILE, 6" Ø DRAINAGE PIPE, WELDED WIRE FORM, AND SELECT MATERIAL, SEE ROADWAY PLANS.

GEOTEXTILE (TYPE 1 OR TYPE 5) SHALL BE IN ACCORDANCE WITH THE STANDARD SPECIFICATIONS SECTION 1056.

SELECT MATERIAL BACKFILL (CLASS V OR CLASS VI) SHALL BE IN ACCORDANCE WITH STANDARD SPECIFICATIONS SECTION 1016.

SELECT MATERIAL BACKFILL IS TO BE CONTINUOUS ALONG FILL FACE OF BACKWALL FROM OUTSIDE EDGE TO OUTSIDE EDGE OF APPROACH SLAB.

FOR THE 6" Ø DRAINAGE PIPE OUTLET(S), SEE ROADWAY STANDARD DRAWINGS.

AREA BETWEEN THE WINGWALL AND APPROACH SLAB SHALL BE GRADED TO DRAIN THE WATER AWAY FROM THE FILL FACE OF THE BRIDGE AND SHALL BE PAVED. SEE ROADWAY PLANS.

THE JOINT OPENING AT THE APPROACH SLAB/DECK INTERFACE SHALL BE SAWED NO MORE THAN 12 HOURS AFTER THE APPROACH SLAB IS CAST. THE JOINT SHALL BE CLEANED OF ALL DEBRIS BEFORE THE SEALANT IS APPLIED. THE JOINT SEALER MATERIAL SHALL CONFORM TO THE REQUIREMENTS OF SECTION 1028-3 OF THE STANDARD SPECIFICATIONS.

PROJECT NO. R-2582A
NORTHAMPTON COUNTY
STATION: 192+85.76 -L-

SHEET 2 OF 2

ENGINEER OF RECORD:
NORTH CAROLINA PROFESSIONAL SEAL 37400 ENGINEER
GREGORY M. GILLAND
A09KA0A6C5C
2/1/2019

WETHERILL ENGINEERING
1223 Jones Franklin Rd.
Raleigh, N.C. 27606
Bus: 919 851 8077
Fax: 919 851 8107
LICENSE NO. F-0377

STATE OF NORTH CAROLINA
DEPARTMENT OF TRANSPORTATION
RALEIGH

STANDARD

BRIDGE APPROACH SLAB DETAILS

(LEFT LANE)

REVISIONS								SHEET NO.
NO.	BY:	DATE:	NO.	BY:	DATE:			S3-38
1			3					TOTAL SHEETS
2			4					38

ASSEMBLED BY : D. HODGE		DATE : 10/18	
CHECKED BY : G.M. GILLAND		DATE : 11/18	
DRAWN BY : TLA 10/05	REV. 12/21/11	MAA/GM	
CHECKED BY : GM 5/06	REV. 6/13	MAA/GM	
	REV. 12/17	MAA/THC	

DOCUMENT NOT CONSIDERED FINAL UNLESS ALL SIGNATURES COMPLETED

STD. NO. BAS5 (SHT 1a)

P:\2018\18127.02_R-2582A\Structures\Revision (Site 2)\Site 2\DGN\LEFT LANE\R2582A_SMU_ AS_650128rev.dgn
1/31/2019 11:47:41 AM

DocuSign Envelope ID: 817B1D73-88BA-49A0-9F22-45781A03197E

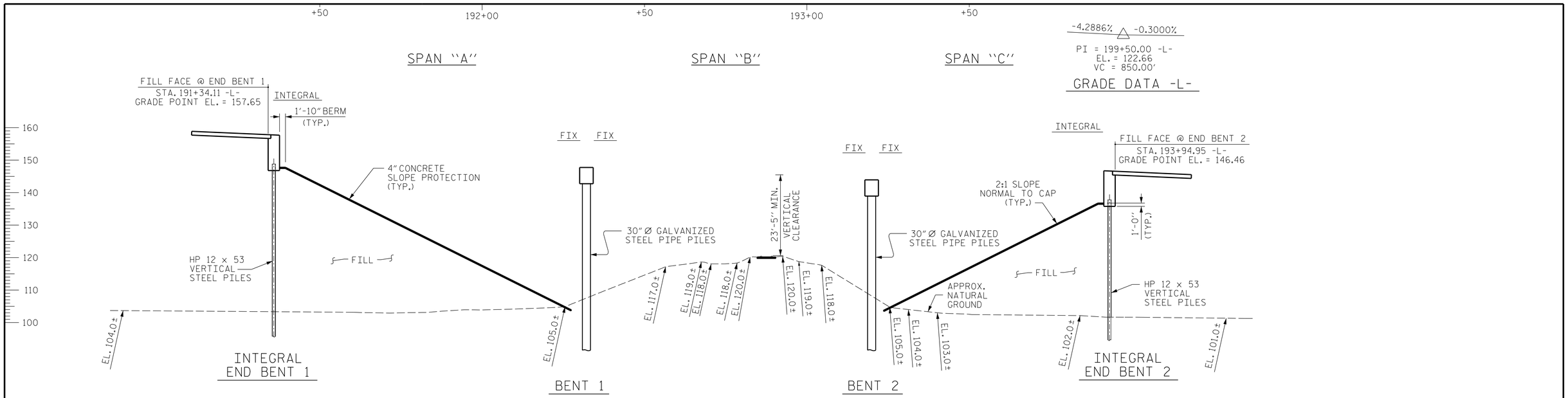

SECTION ALONG RIGHT LANE CONTROL LINE

(SECTIONS AT END BENTS AND BENTS TAKEN AT RIGHT ANGLES)

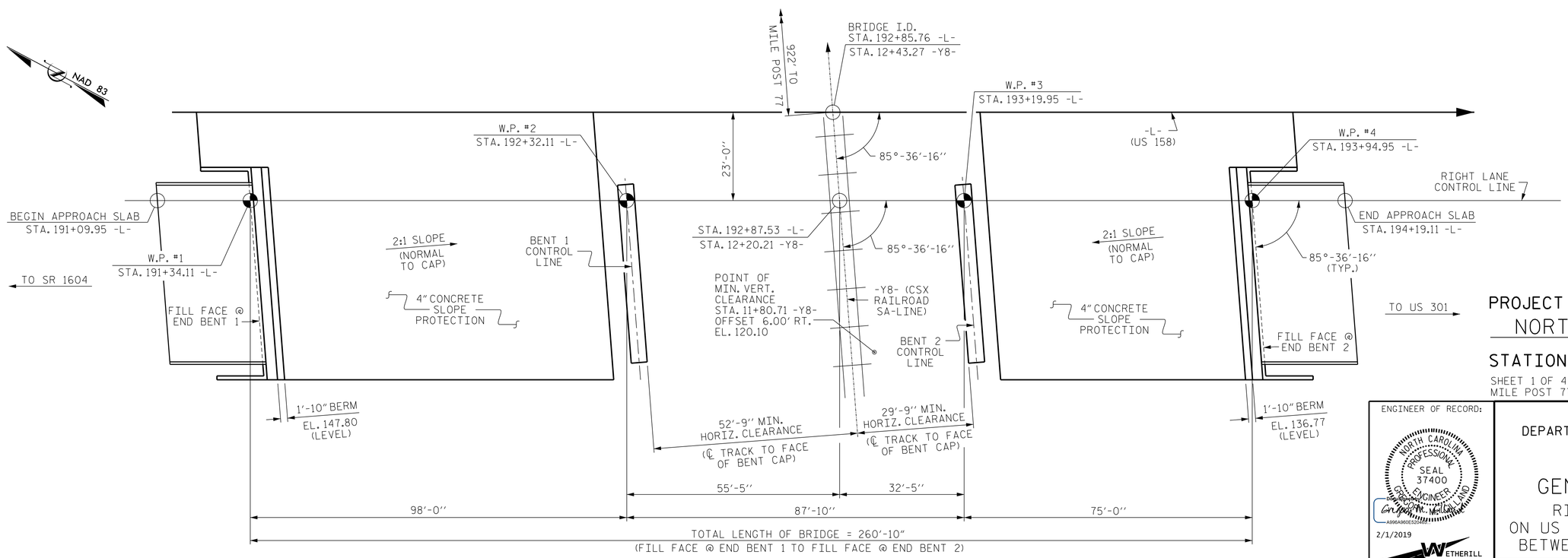

PLAN

(PILES NOT SHOWN IN PLAN VIEW)

PROJECT NO. R-2582A
NORTHAMPTON COUNTY
STATION: 192+85.76 -L-
12+43.27 -Y8-
SHEET 1 OF 4
MILE POST 77.17
BRIDGE No. 129

ENGINEER OF RECORD:
NORTH CAROLINA PROFESSIONAL SEAL 37400 CIVIL ENGINEER
G.M. GILLAND
A996A9B0E5E5B4...
2/1/2019

WETHERILL ENGINEERING
1223 Jones Franklin Rd.
Raleigh, N.C. 27606
Bus: 919 851 8077
Fax: 919 851 8107
LICENSE NO. F-0377

STATE OF NORTH CAROLINA
DEPARTMENT OF TRANSPORTATION
RALEIGH

GENERAL DRAWING
RIGHT LANE BRIDGE
ON US 158 OVER CSX SA-LINE
BETWEEN SR 1604 & US 301

REVISIONS						SHEET NO.
NO.	BY:	DATE:	NO.	BY:	DATE:	S4-1
1			3			TOTAL SHEETS
2			4			38

DRAWN BY : D. HODGE DATE : 10/18
CHECKED BY : G.M. GILLAND DATE : 10/18

DOCUMENT NOT CONSIDERED FINAL
UNLESS ALL SIGNATURES COMPLETED

P:\2018\18127.02 R-2582A\Structures\Revision (Site 2)\Site 2\DGN\RIGHT LANE\R2582A_SMU_ GD_650129rev.dgn
2/1/2019 7:52:02 AM

DocuSign Envelope ID: 817B1D73-88BA-49A0-9F22-45781A03197E

BM #4: R/R SPIKE IN 24" SWEET GUM, 450' LT. OF STA. 197+65 -L-, ELEV. = 102.47

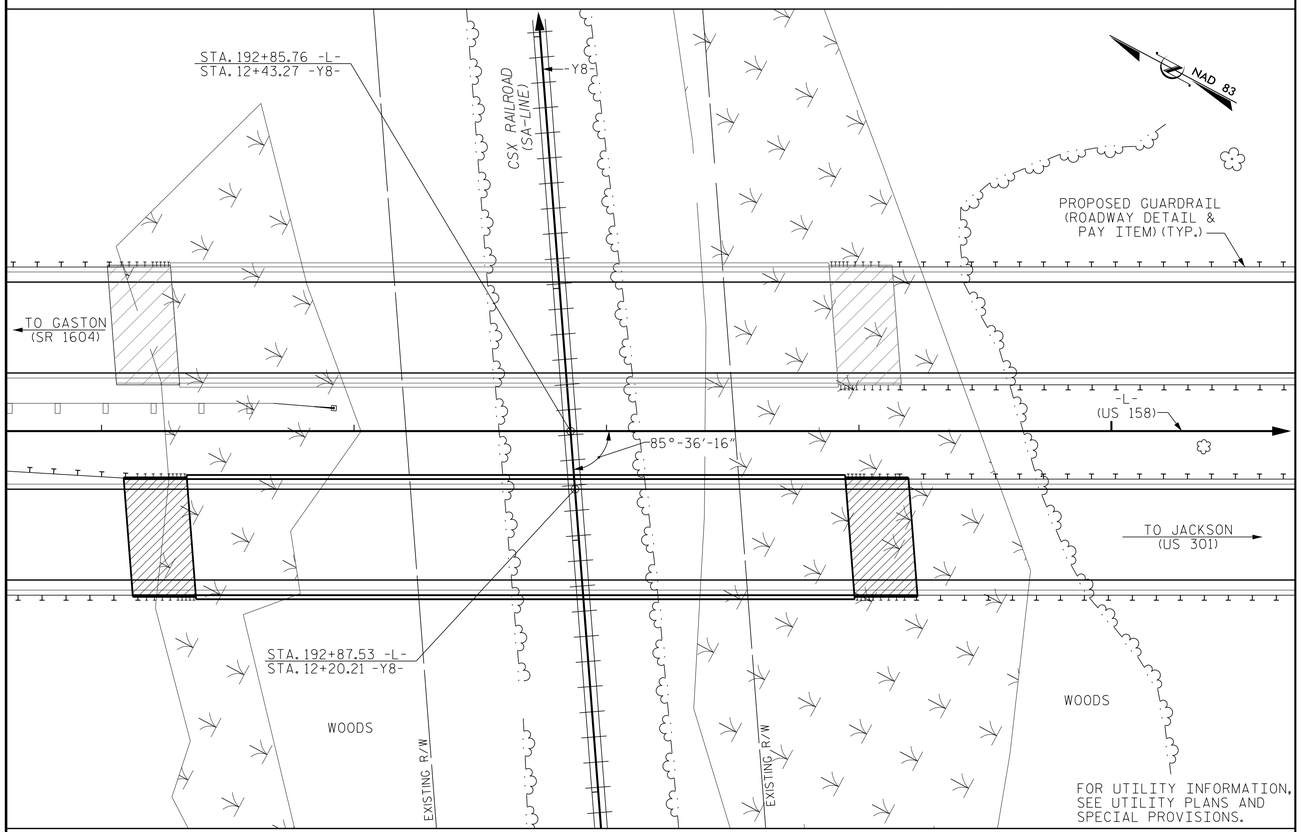

LOCATION SKETCH

RAILROAD EROSION CONTROL DETAIL

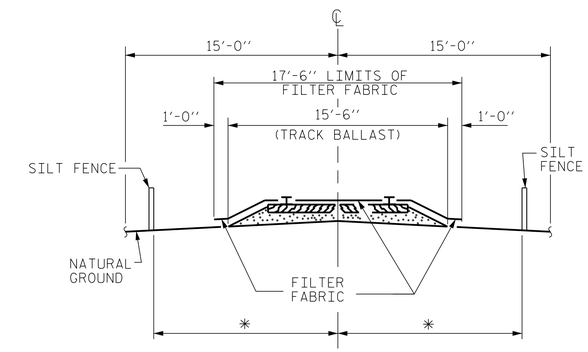

* TO BE DETERMINED BY THE RESIDENT ENGINEER IN CONSULTATION WITH THE RAILROAD ENGINEER.

NOTES

RAILROAD EROSION CONTROL MEASURES SHALL BE INSTALLED PRIOR TO PERFORMING ANY WORK IN THE RAILROAD RIGHT-OF-WAY.

ADDITIONAL EROSION CONTROL MEASURES FOR PROTECTION OF RAILROAD DITCHES MAY BE REQUIRED AS DIRECTED BY THE ENGINEER.

NO SEPARATE PAYMENT WILL BE MADE FOR RAILROAD EROSION CONTROL MEASURES.

LIMITS OF SILT FENCE AND FILTER FABRIC PARALLEL TO RAILROAD SHALL EXTEND A MINIMUM OF 25'-0" OUTSIDE EDGE OF SUPERSTRUCTURE OR TOE OF SLOPE ON CONSTRUCTION. A GREATER LENGTH OF SILT FENCE OR FILTER FABRIC MAY BE REQUIRED IF SO DIRECTED BY THE ENGINEER.

FILTER FABRIC TO BE NAILED TO TIMBER RAIL TIES WITH PRIME SOURCE "GRIP CAP" OR EQUIVALENT. FILTER FABRIC ON SHOULDER TO BE SECURED AS DIRECTED BY THE ENGINEER AND RAILROAD.

TOP OF RAIL ELEVATIONS

-Y8- (CSX SA-LINE)		
STATION	LEFT RAIL	RIGHT RAIL
8+20.29	117.74	117.71
9+01.53	118.26	118.26
9+82.26	118.72	118.73
10+00.00	118.63	118.63
10+87.93	119.31	---
11+02.75	---	119.46
12+11.80	120.37	120.34
12+96.15	121.04	121.04
13+89.68	121.81	121.81
14+76.35	122.48	122.46
15+65.81	123.25	123.24
15+79.35	123.54	123.54
16+33.02	124.04	124.07

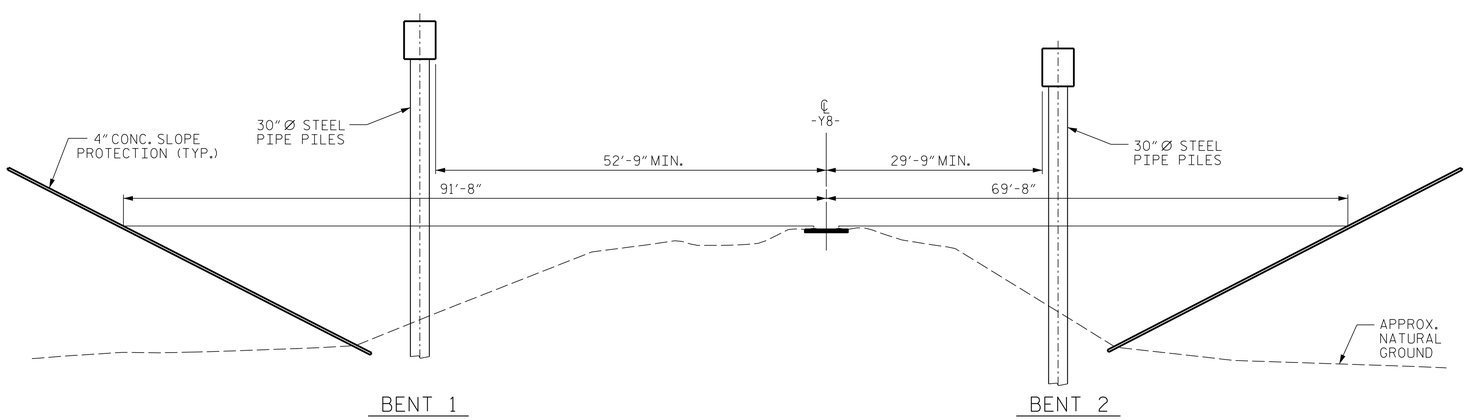

SECTION THROUGH RAILROAD

LOOKING IN DIRECTION OF INCREASING STATIONS ON RAILROAD
(SPAN LENGTH BASED ON THIS SECTION)

PROJECT NO. R-2582A
NORTHAMPTON COUNTY
STATION: 192+85.76 -L-

SHEET 2 OF 4

ENGINEER OF RECORD:
NORTH CAROLINA PROFESSIONAL SEAL 37400 ENGINEER GREGORY M. GILLAND
DocuSigned by: Gregory M. Gilland
2/1/2019

WETHERILL ENGINEERING
1223 Jones Franklin Rd.
Raleigh, N.C. 27606
Bus: 919 851 8077
Fax: 919 851 8107
LICENSE NO. F-0377

STATE OF NORTH CAROLINA
DEPARTMENT OF TRANSPORTATION
RALEIGH

GENERAL DRAWING
RIGHT LANE BRIDGE
ON US 158 OVER CSX SA-LINE
BETWEEN SR 1604 & US 301

REVISIONS						SHEET NO.
NO.	BY:	DATE:	NO.	BY:	DATE:	S4-2
1			3			TOTAL SHEETS
2			4			38

DOCUMENT NOT CONSIDERED FINAL UNLESS ALL SIGNATURES COMPLETED

DRAWN BY : D. HODGE DATE : 10/18
CHECKED BY : G.M. GILLAND DATE : 10/18

P:\2018\18127.02 R-2582A\Structures\Revision (Site 2\Site 2\DGN\RIGHT LANE\R2582A_SMU_ GD_650129rev.dgn
2/1/2019 7:52:49 AM

DocuSign Envelope ID: 817B1D73-88BA-49A0-9F22-45781A03197E

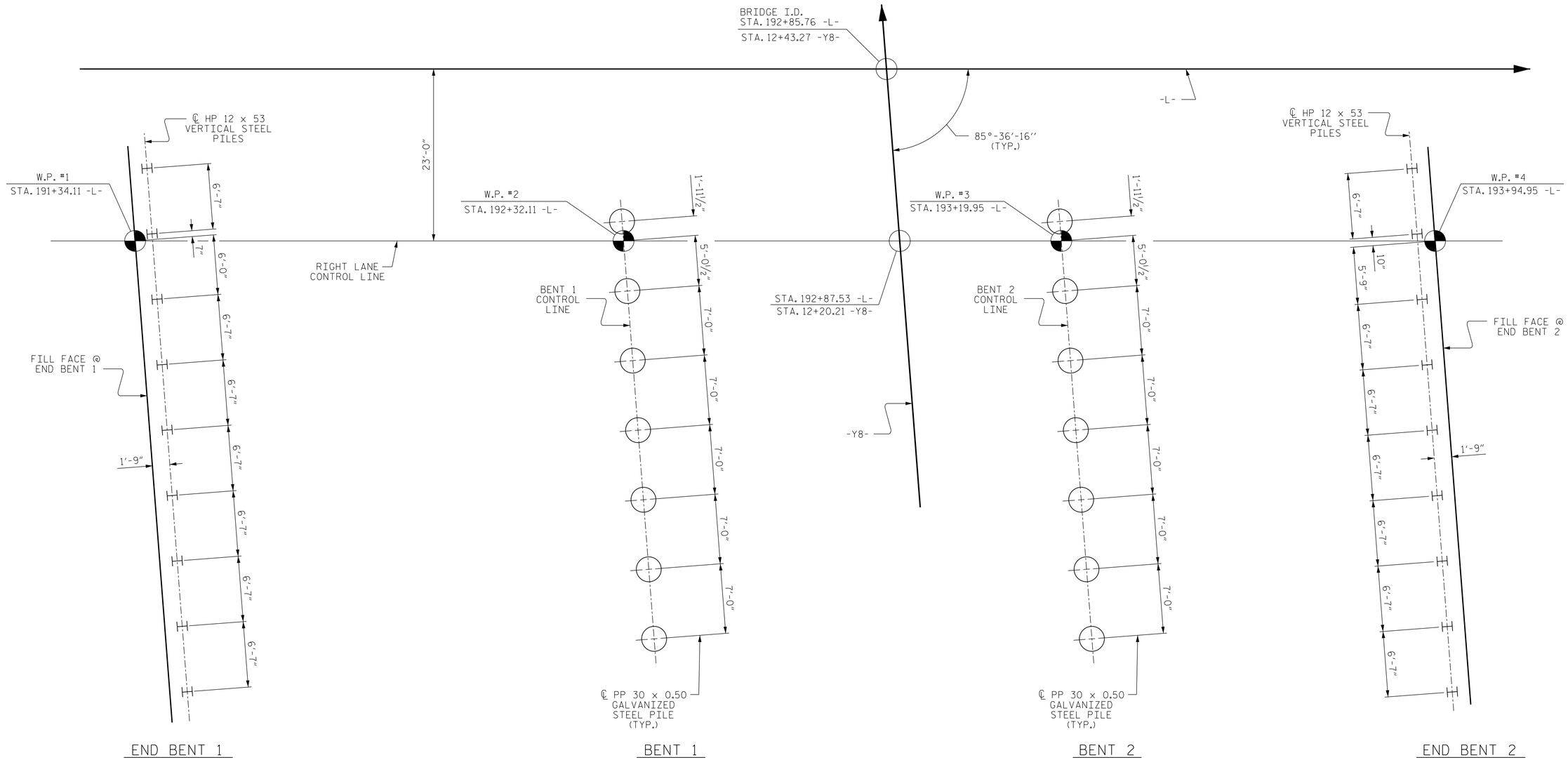

FOUNDATION LAYOUT

PROJECT NO. R-2582A
NORTHAMPTON COUNTY
STATION: 192+85.76 -L-

SHEET 3 OF 4

FOUNDATION NOTES:

FOR PILES, SEE SECTION 450 OF THE STANDARD SPECIFICATIONS.

PILES AT END BENTS NO. 1 AND 2 ARE DESIGNED FOR A FACTORED RESISTANCE OF 110 TONS PER PILE.

DRIVE PILES AT END BENTS NO. 1 AND 2 TO A REQUIRED DRIVING RESISTANCE OF 185 TONS PER PILE.

PILES AT BENTS NO. 1 AND 2 ARE DESIGNED FOR A FACTORED RESISTANCE OF 245 TONS PER PILE.

DRIVE PILES AT BENTS NO. 1 AND 2 TO A REQUIRED DRIVING RESISTANCE OF 330 TONS PER PILE.

INSTALL PILES AT BENT NO. 1 TO A TIP ELEVATION NO HIGHER THAN 78.5 FT.

INSTALL PILES AT BENT NO. 2 TO A TIP ELEVATION NO HIGHER THAN 70.5 FT.

IT HAS BEEN ESTIMATED THAT A HAMMER WITH AN EQUIVALENT RATED ENERGY IN THE RANGE OF 66,300 TO 107,000 FT-LBS PER BLOW WILL BE REQUIRED TO DRIVE PILES AT BENTS NO. 1 & 2. THIS ESTIMATED ENERGY RANGE DOES NOT RELEASE THE CONTRACTOR FROM PROVIDING DRIVING EQUIPMENT IN ACCORDANCE WITH SUBARTICLE 450-3(D)(2) OF THE STANDARD SPECIFICATIONS.

OBSERVE A 5 MONTH WAITING PERIOD AFTER CONSTRUCTING THE EMBANKMENT TO WITHIN 2 FT OF FINISHED GRADE BEFORE BEGINNING END BENT CONSTRUCTION AT END BENTS NO. 1 & 2. FOR BRIDGE WAITING PERIODS, SEE ROADWAY PLANS AND SECTION 235 OF THE STANDARD SPECIFICATIONS.

OBSERVE A 5 MONTH WAITING PERIOD AFTER CONSTRUCTING THE EMBANKMENT TO WITHIN 2 FT OF FINISHED GRADE AT THE APROACHES OF THE BOTH END BENTS BEFORE BEGINNING CONSTRUCTION AT BENTS NO. 1 & 2. FOR BRIDGE WAITING PERIODS, SEE ROADWAY PLANS AND SECTION 235 OF THE STANDARD SPECIFICATIONS.

TESTING THE FIRST PRODUCTION PILE WITH THE PDA DURING DRIVING, RESTRIKING OR REDRIVING IS REQUIRED AT BENTS NO. 1 OR 2. FOR PDA TESTING, SEE SECTION 450 OF THE STANDARD SPECIFICATIONS.

TESTING PILES WITH THE PDA DURING DRIVING, RESTRIKING OR REDRIVING MAY BE REQUIRED AT END BENTS 1 & 2. THE ENGINEER WILL DETERMINE THE NEED FOR PDA TESTING. FOR PDA TESTING, SEE SECTION 450 OF THE STANDARD SPECIFICATIONS.

PIPE PILE PLATES ARE REQUIRED FOR STEEL PIPE PILES AT BENTS NO. 1 & 2. USE PIPE PILE PLATES WITH A DIAMETER EQUAL TO THE PIPE PILE DIAMETER. FOR STEEL PIPE PILE PLATES, SEE SECTION 450 OF THE STANDARD SPECIFICATIONS.

SEE ROADWAY PLANS AND SECTION 235 OF THE STANDARD SPECIFICATIONS FOR THE SETTLEMENT GAUGES REQUIRED AT END BENT NO. 1, END BENT NO. 2, INTERIOR BENT NO. 1, AND INTERIOR BENT NO. 2.

DRAWN BY : D. HODGE DATE : 11/18
CHECKED BY : G.M. GILLAND DATE : 12/18

DOCUMENT NOT CONSIDERED FINAL UNLESS ALL SIGNATURES COMPLETED

ENGINEER OF RECORD:
NORTH CAROLINA PROFESSIONAL SEAL 37400 ENGINEER
GREGORY M. GILLAND
A59BA8D0
2/1/2019

WETHERILL ENGINEERING
1223 Jones Franklin Rd.
Raleigh, N.C. 27606
Bus: 919 851 8077
Fax: 919 851 8107
LICENSE NO. F-0377

STATE OF NORTH CAROLINA
DEPARTMENT OF TRANSPORTATION
RALEIGH

GENERAL DRAWING

RIGHT LANE BRIDGE
ON US 158 OVER CSX SA-LINE
BETWEEN SR 1604 & US 301

REVISIONS						SHEET NO.
NO.	BY:	DATE:	NO.	BY:	DATE:	S3-3
1			3			TOTAL SHEETS
2			4			38

P:\2018\18127.02 R-2582A\Structures\Revision (Site 2\Site 2\DGN\RIGHT LANE\R2582A_SMU_ FL_650129rev.dgn
2/1/2019 7:53:55 AM

DocuSign Envelope ID: 224528F0-0F95-4F76-A9C5-38258D5BEEA0

NOTES:

ASSUMED LIVE LOAD = HL-93 OR ALTERNATE LOADING.

THIS BRIDGE HAS BEEN DESIGNED IN ACCORDANCE WITH THE REQUIREMENTS OF THE AASHTO LRFD BRIDGE DESIGN SPECIFICATIONS.

THIS BRIDGE IS LOCATED IN SEISMIC ZONE 1.

FOR OTHER DESIGN DATA AND GENERAL NOTES, SEE SHEET SN.

FOR SUBMITTAL OF WORKING DRAWINGS, SEE SPECIAL PROVISIONS.

FOR FALSEWORK AND FORMWORK, SEE SPECIAL PROVISIONS.

FOR CRANE SAFETY, SEE SPECIAL PROVISIONS.

FOR GROUT FOR STRUCTURES, SEE SPECIAL PROVISIONS.

PRESTRESSED CONCRETE DECK PANELS MAY BE USED IN LIEU OF METAL STAY-IN-PLACE FORMS IN ACCORDANCE WITH ARTICLE 420-3 OF THE STANDARD SPECIFICATIONS.

REMOVABLE FORMS MAY BE USED IN LIEU OF METAL STAY-IN-PLACE FORMS IN ACCORDANCE WITH ARTICLE 420-3 OF THE STANDARD SPECIFICATIONS.

THE RAILROAD TRACK TOP OF RAIL ELEVATIONS ON THE PLANS ARE FROM THE BEST INFORMATION AVAILABLE. PRIOR TO BEGINNING BRIDGE CONSTRUCTION, VERIFY THE TOP OF RAIL ELEVATIONS AND REPORT ANY VARIATIONS TO THE ENGINEER. ANY PLAN REVISIONS NECESSARY TO ACHIEVE THE REQUIRED MINIMUM CLEARANCE WILL BE PROVIDED BY THE DEPARTMENT.

NEEDLE BEAMS WILL NOT BE ALLOWED UNLESS OTHERWISE CALLED FOR ON THE PLANS OR APPROVED BY THE ENGINEER.

FOR INTERIOR BENTS, ONLY PARTIAL GALVANIZING OF THE PILES IS REQUIRED. SEE INTERIOR BENT SHEETS FOR REQUIRED GALVANIZED LENGTHS. PAYMENT FOR PARTIALLY GALVANIZED PILES WILL BE MADE UNDER THE CONTRACT UNIT PRICE FOR GALVANIZED STEEL PILES.

FOR EROSION CONTROL MEASURES, SEE EROSION CONTROL PLANS.

FOR RAILROAD PROVISIONS, SEE SPECIAL PROVISIONS.

TOTAL BILL OF MATERIAL

	PDA TESTING	REINFORCED CONCRETE DECK SLAB	GROOVING BRIDGE FLOORS	CLASS A CONCRETE	BRIDGE APPROACH SLABS	REINFORCING STEEL	54" PRESTRESSED CONCRETE GIRDERS		PILE DRIVING EQUIPMENT SETUP FOR HP 12 X 53 STEEL PILES	PILE DRIVING EQUIPMENT SETUP FOR PP 30 X 0.50 GALVANIZED STEEL PILES	HP 12 x 53 STEEL PILES		PP 30 x 0.50 GALVANIZED STEEL PILES		PIPE PILE PLATES	PILE REDRIVES	CONCRETE BARRIER RAIL	72" CHAIN LINK FENCE	4" SLOPE PROTECTION	ELASTOMERIC BEARINGS
	EACH	SQ. FT.	SQ. FT.	CU. YDS.	LUMP SUM	LBS.	No.	LIN. FT.	EACH	EACH	No.	LIN. FT.	No.	LIN. FT.	EACH	EACH	LIN. FT.	LIN. FT.	SQ. YDS.	LUMP SUM
SUPERSTRUCTURE		12,846	13,236		LUMP SUM		15	1,285.42									518.33	504.0		LUMP SUM
END BENT No. 1				47.3		7,535			9		9	810				5			815	
BENT No. 1				40.0		4,370				7			7	819	7	4				
BENT No. 2				40.0		4,370				7			7	854	7	4				
END BENT No. 2				46.2		7,406			9		9	900				5			620	
TOTAL	2	12,846	13,236	173.5	LUMP SUM	23,681	15	1,285.42	18	14	18	1,710	14	1,673	14	18	518.33	504.0	1435	LUMP SUM

PROJECT NO. R-2582A

NORTHAMPTON COUNTY

STATION: 192+85.76 -L-

SHEET 4 OF 4

ENGINEER OF RECORD:
3/26/2019

NORTH CAROLINA PROFESSIONAL SEAL 37400 ENGINEER GREGORY M. GILLAND

DocuSigned by: Gregory M. Gilland

WETHERILL ENGINEERING

1223 Jones Franklin Rd.
Raleigh, N.C. 27606
Bus: 919 851 8077
Fax: 919 851 8107
LICENSE NO. F-0377

STATE OF NORTH CAROLINA
DEPARTMENT OF TRANSPORTATION
RALEIGH

GENERAL DRAWING

RIGHT LANE BRIDGE
ON US 158 OVER CSX SA-LINE
BETWEEN SR 1604 & US 301

REVISIONS						SHEET NO.
NO.	BY:	DATE:	NO.	BY:	DATE:	S4-4
1			3			TOTAL SHEETS
2			4			38

DOCUMENT NOT CONSIDERED FINAL UNLESS ALL SIGNATURES COMPLETED

DRAWN BY : D. HODGE DATE : 10/18
CHECKED BY : G.M. GILLAND DATE : 1/19

P:\2018\18127.02 R-2582A\Structures\Revision (Site 2\Site 2\DGN\RIGHT LANE\R2582A_SMU_ GD_650129rev.dgn
3/25/2019 8:13:37 AM

DocuSign Envelope ID: 817B1D73-88BA-49A0-9F22-45781A03197E

LOAD AND RESISTANCE FACTOR RATING (LRFR) SUMMARY FOR PRESTRESSED CONCRETE GIRDERS

LEVEL		VEHICLE	WEIGHT (W) (TONS)	CONTROLLING LOAD RATING (#)	MINIMUM RATING FACTORS (RF)	TONS = W × RF	STRENGTH I LIMIT STATE											SERVICE III LIMIT STATE						COMMENT NUMBER
								MOMENT					SHEAR						MOMENT					
							LIVE-LOAD FACTORS (γ_{LL})	DISTRIBUTION FACTORS (DF)	RATING FACTOR	SPAN	GIRDER LOCATION	DISTANCE FROM LEFT END OF SPAN (ft)	DISTRIBUTION FACTORS (DF)	RATING FACTOR	SPAN	GIRDER LOCATION	DISTANCE FROM LEFT END OF SPAN (ft)	LIVE-LOAD FACTORS (γ_{LL})	DISTRIBUTION FACTORS (DF)	RATING FACTOR	SPAN	GIRDER LOCATION	DISTANCE FROM LEFT END OF SPAN (ft)	
DESIGN LOAD RATING		HL-93 (INVENTORY)	N/A	1	1.06	--	1.75	0.80	1.37	B	I	42.79	1.01	1.06	B	I	60.19	0.80	0.80	1.08	A	I	47.56	1 & 2
		HL-93 (OPERATING)	N/A		1.76	--	1.35	0.80	1.78	B	I	42.79	1.01	1.76	A	I	86.18	N/A	0.80	--	--	--	--	1 & 2
		HS-20 (INVENTORY)	36.000	2	1.49	53.64	1.75	0.80	1.85	B	I	42.79	1.01	1.78	B	I	77.59	0.80	0.80	1.49	A	I	47.56	1 & 2
		HS-20 (OPERATING)	36.000		2.33	83.88	1.35	0.80	2.40	B	I	42.79	1.01	2.33	B	I	77.59	N/A	0.80	--	--	--	--	1 & 2
LEGAL LOAD RATING	SINGLE VEHICLE (SV)	SNSH	13.500		3.52	47.52	1.40	0.80	5.37	B	I	42.79	1.01	5.57	B	I	77.59	0.80	0.80	3.52	A	I	47.56	1 & 2
		SNGARBS2	20.000		2.55	51.00	1.40	0.80	3.93	B	I	42.79	1.01	3.90	B	I	77.59	0.80	0.80	2.55	A	I	47.56	1 & 2
		SNAGRIS2	22.000		2.39	52.58	1.40	0.80	3.70	B	I	42.79	1.01	3.60	B	I	77.59	0.80	0.80	2.39	A	I	47.56	1 & 2
		SNCOTTS3	27.250		1.75	47.69	1.40	0.80	2.67	B	I	42.79	1.01	2.73	B	I	77.59	0.80	0.80	1.75	A	I	47.56	1 & 2
		SNAGGRS4	34.925		1.44	50.29	1.40	0.80	2.20	B	I	42.79	1.01	2.23	B	I	77.59	0.80	0.80	1.44	A	I	47.56	1 & 2
		SNS5A	35.550		1.40	49.77	1.40	0.80	2.16	B	I	42.79	1.01	2.25	B	I	77.59	0.80	0.80	1.40	A	I	47.56	1 & 2
		SNS6A	39.950		1.28	51.14	1.40	0.80	1.97	B	I	42.79	1.01	2.03	B	I	77.59	0.80	0.80	1.28	A	I	47.56	1 & 2
		SNS7B	42.000		1.22	51.24	1.40	0.80	1.88	B	I	42.79	1.01	1.98	B	I	77.59	0.80	0.80	1.22	A	I	47.56	1 & 2
	TRUCK TRACTOR SEMI-TRAILER (TTST)	TNAGRIT3	33.000		1.56	51.48	1.40	0.80	2.40	B	I	42.79	1.01	2.43	B	I	77.59	0.80	0.80	1.56	A	I	47.56	1 & 2
		TNT4A	33.075		1.56	51.60	1.40	0.80	2.41	B	I	42.79	1.01	2.39	B	I	77.59	0.80	0.80	1.56	A	I	47.56	1 & 2
		TNT6A	41.600		1.27	52.83	1.40	0.80	1.96	B	I	42.79	1.01	2.10	B	I	77.59	0.80	0.80	1.27	A	I	47.56	1 & 2
		TNT7A	42.000		1.27	53.34	1.40	0.80	1.96	B	I	42.79	1.01	2.06	B	I	77.59	0.80	0.80	1.27	A	I	47.56	1 & 2
		TNT7B	42.000		1.30	54.60	1.40	0.80	2.02	B	I	42.79	1.01	1.94	B	I	77.59	0.80	0.80	1.30	A	I	47.56	1 & 2
		TNAGRIT4	43.000		1.24	53.32	1.40	0.80	1.93	B	I	42.79	1.01	1.88	B	I	77.59	0.80	0.80	1.24	A	I	47.56	1 & 2
		TNAGT5A	45.000		1.18	53.10	1.40	0.80	1.82	B	I	42.79	1.01	1.84	B	I	77.59	0.80	0.80	1.18	A	I	47.56	1 & 2
		TNAGT5B	45.000	3	1.17	52.65	1.40	0.80	1.80	B	I	42.79	1.01	1.78	B	I	77.59	0.80	0.80	1.17	A	I	47.56	1 & 2

LOAD FACTORS:

	LIMIT STATE	γ_{DC}	γ_{DW}
DESIGN LOAD RATING FACTORS	STRENGTH I	1.25	1.50
	SERVICE III	1.00	1.00

NOTES:

MINIMUM RATING FACTORS ARE BASED ON THE STRENGTH I AND SERVICE III LIMIT STATES.

ALLOWABLE STRESSES FOR SERVICE III LIMIT STATE ARE AS REQUIRED FOR DESIGN.

COMMENTS:

1. END RESTRAINT FOR INTEGRAL END BENTS IS NOT CONSIDERED FOR LOAD RATING ANALYSIS.
2. LOAD RATING ASSUMES SIMPLE SPAN CONDITIONS PER NCDOT BRIDGE DESIGN MANUAL, CHAPTER 6.

(#) CONTROLLING LOAD RATING

(1) DESIGN LOAD RATING (HL-93)

(2) DESIGN LOAD RATING (HS-20)

(3) LEGAL LOAD RATING **

** SEE CHART FOR VEHICLE TYPE

GIRDER LOCATION

I - INTERIOR GIRDER
E - EXTERIOR LEFT AND RIGHT GIRDER

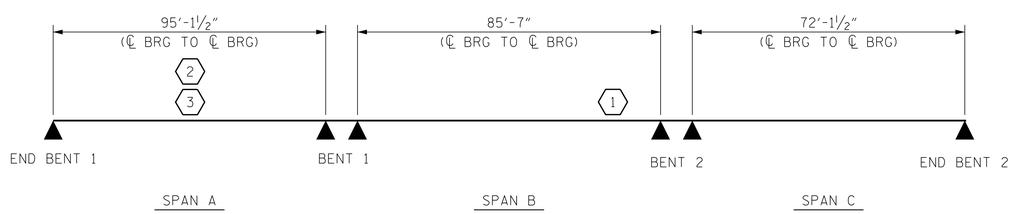

LRFR SUMMARY

PROJECT NO. R-2582A
NORTHAMPTON COUNTY
STATION: 192+85.76 -L-

ENGINEER OF RECORD:
NORTH CAROLINA PROFESSIONAL SEAL 37400 ENGINEER GREGORY M. GILLAND
DocuSigned by: Gregory M. Gilland
2/1/2019

WETHERILL ENGINEERING
1223 Jones Franklin Rd.
Raleigh, N.C. 27606
Bus: 919 851 8077
Fax: 919 851 8107
LICENSE NO. F-0377

STATE OF NORTH CAROLINA
DEPARTMENT OF TRANSPORTATION
RALEIGH

STANDARD
LRFR SUMMARY FOR PRESTRESSED CONCRETE GIRDERS
(NON-INTERSTATE TRAFFIC)
(RIGHT LANE)

REVISIONS						SHEET NO.
NO.	BY:	DATE:	NO.	BY:	DATE:	S4-5
1			3			TOTAL SHEETS
2			4			38

DOCUMENT NOT CONSIDERED FINAL UNLESS ALL SIGNATURES COMPLETED

ASSEMBLED BY : G.M. GILLAND DATE : 11-18
CHECKED BY : B.C. HUNT DATE : 11-18
DRAWN BY : MAA 1/08
CHECKED BY : GM/DI 2/08
REV. 11/12/08RR MAA/GM
REV. 10/1/11 MAA/GM
REV. 12/17 MAA/THC

STD. NO. LRFR1

P:\2018\18127.02 R-2582A\Structures\Revision (Site 2\Site 2\DGN\RIGHT LANE\R2582A_SMU_ LR_650129revdgn
2/1/2019 7:54:39 AM

DocuSign Envelope ID: 817B1D73-88BA-49A0-9F22-45781A03197E

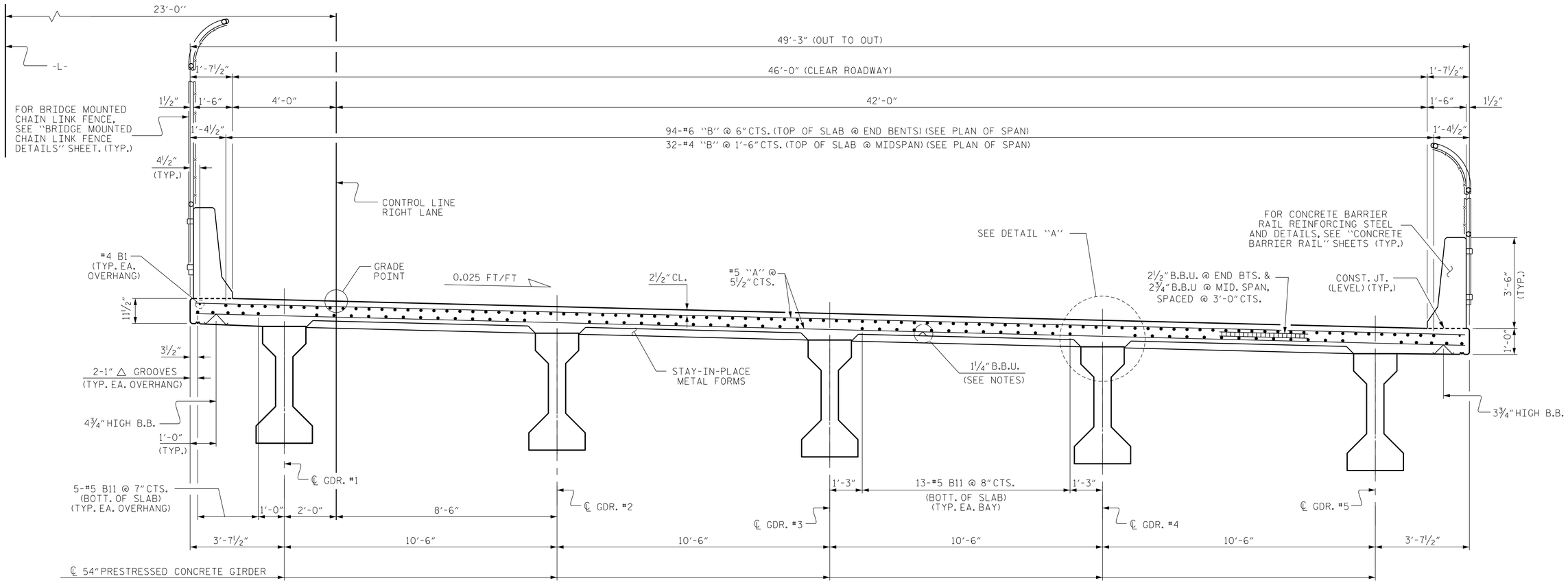

TYPICAL SECTION

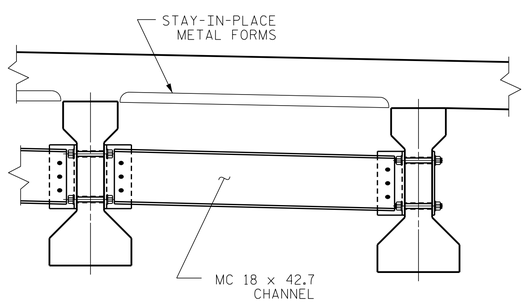

TYPICAL INTERMEDIATE DIAPHRAGM

SEE "INTERMEDIATE STEEL DIAPHRAGMS FOR TYPE IV PRESTRESSED CONCRETE GIRDERS" SHEET FOR DETAILS

NOTES

PROVIDE 1¼" HIGH BEAM BOLSTERS UPPER AT 4'-0" CTS. ATOP THE METAL STAY-IN-PLACE FORMS TO SUPPORT THE BOTTOM MAT OF 'A' BARS. WHEN USING REMOVABLE FORMS, PROVIDE CONTINUOUS HIGH CHAIRS FOR METAL DECK (C.H.C.M.) @ 4'-0" CTS. WITH A HEIGHT TO SUPPORT THE BOTTOM MAT OF 'A' BARS A CLEAR DISTANCE OF 2½" ABOVE THE TOP OF THE REMOVABLE FORM.

LONGITUDINAL STEEL MAY BE SHIFTED SLIGHTLY, AS NECESSARY, TO AVOID INTERFERENCE WITH STIRRUPS IN PRESTRESSED CONCRETE GIRDERS.

BARRIER RAIL IN A CONTINUOUS UNIT SHALL NOT BE CAST UNTIL ALL SLAB CONCRETE IN THE UNIT HAS BEEN CAST AND HAS REACHED A MINIMUM COMPRESSIVE STRENGTH OF 3,000 PSI.

PREVIOUSLY CAST CONCRETE SHALL HAVE ATTAINED A MINIMUM COMPRESSIVE STRENGTH OF 3,000 PSI BEFORE ADDITIONAL CONCRETE IS CAST IN THE SLAB.

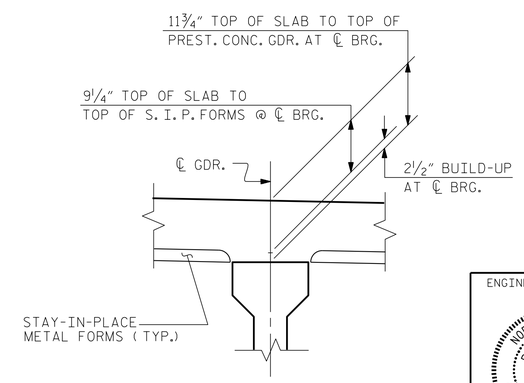

DETAIL "A"

PROJECT NO. R-2582A
NORTHAMPTON COUNTY
STATION: 192+85.76 -L-

SHEET 1 OF 3

ENGINEER OF RECORD:
NORTH CAROLINA PROFESSIONAL SEAL 37400 ENGINEER
Digitally signed by GREGORY M. GILLAND
2/1/2019

WETHERILL ENGINEERING
1223 Jones Franklin Rd.
Raleigh, N.C. 27606
Bus: 919 851 8077
Fax: 919 851 8107
LICENSE NO. F-0377

STATE OF NORTH CAROLINA
DEPARTMENT OF TRANSPORTATION
RALEIGH

SUPERSTRUCTURE
TYPICAL SECTION
(RIGHT LANE)

REVISIONS						SHEET NO.
NO.	BY:	DATE:	NO.	BY:	DATE:	S4-6
1			3			TOTAL SHEETS
2			4			38

DOCUMENT NOT CONSIDERED FINAL UNLESS ALL SIGNATURES COMPLETED

DRAWN BY : D. HODGE DATE : 10/18
CHECKED BY : G.M. GILLAND DATE : 11/18

P:\2018\18127.02 R-2582A\Structures\Revision (Site 2)\Site 2\DGN\RIGHT LANE\R2582A_SMU_ TS_650129rev.dgn
2/1/2019 7:55:27 AM

DocuSign Envelope ID: 817B1D73-88BA-49A0-9F22-45781A03197E

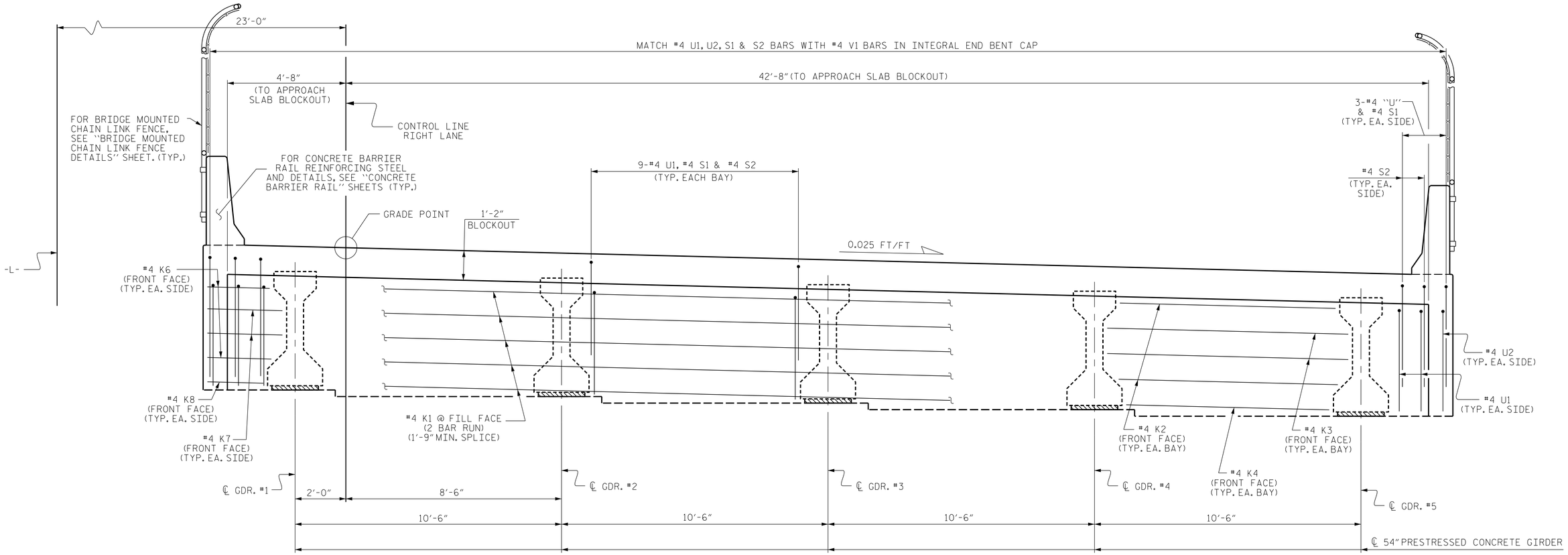

TYPICAL SECTION THROUGH INTEGRAL END BENT

DECK REINFORCEMENT NOT SHOWN FOR CLARITY

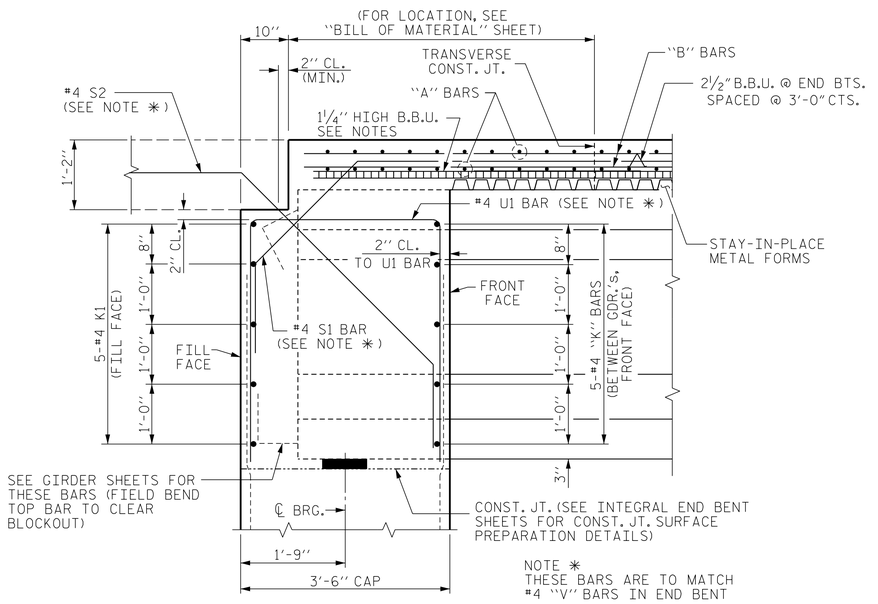

SECTION THRU INTEGRAL END BENT

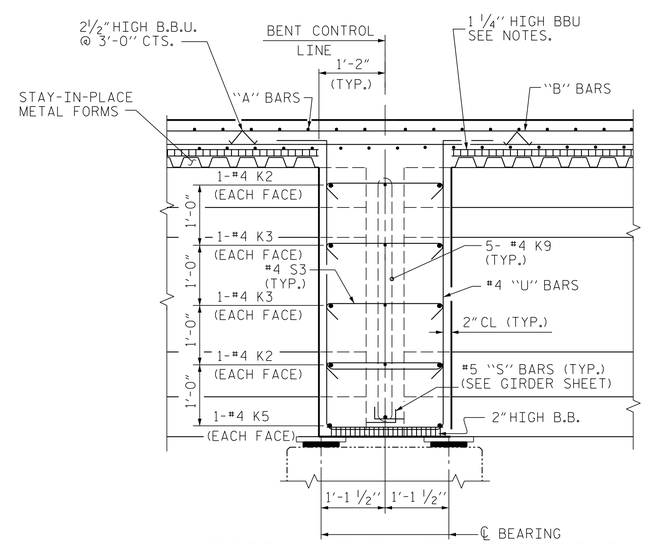

SECTION THRU BENT DIAPHRAGM

PROJECT NO. R-2582A

NORTHAMPTON COUNTY

STATION: 192+85.76 -L-

SHEET 2 OF 3

ENGINEER OF RECORD:

NORTH CAROLINA PROFESSIONAL SEAL 37400 ENGINEER GREGORY M. GILLAND

2/1/2019

WETHERILL ENGINEERING

1223 Jones Franklin Rd.
Raleigh, N.C. 27606
Bus: 919 851 8077
Fax: 919 851 8107
LICENSE NO. F-0377

STATE OF NORTH CAROLINA
DEPARTMENT OF TRANSPORTATION
RALEIGH

SUPERSTRUCTURE

TYPICAL SECTION

(RIGHT LANE)

REVISIONS						SHEET NO.
NO.	BY:	DATE:	NO.	BY:	DATE:	S4-7
1			3			TOTAL SHEETS
2			4			38

DRAWN BY : D. HODGE DATE : 10/18

CHECKED BY : G.M. GILLAND DATE : 11/18

DOCUMENT NOT CONSIDERED FINAL UNLESS ALL SIGNATURES COMPLETED

P:\2018\18127.02 R-2582A\Structures\Revision (Site 2)\Site 2\DGN\RIGHT LANE\R2582A_SMU_ TS_650129rev.dgn
2/1/2019 7:55:46 AM

DocuSign Envelope ID: 817B1D73-88BA-49A0-9F22-45781A03197E

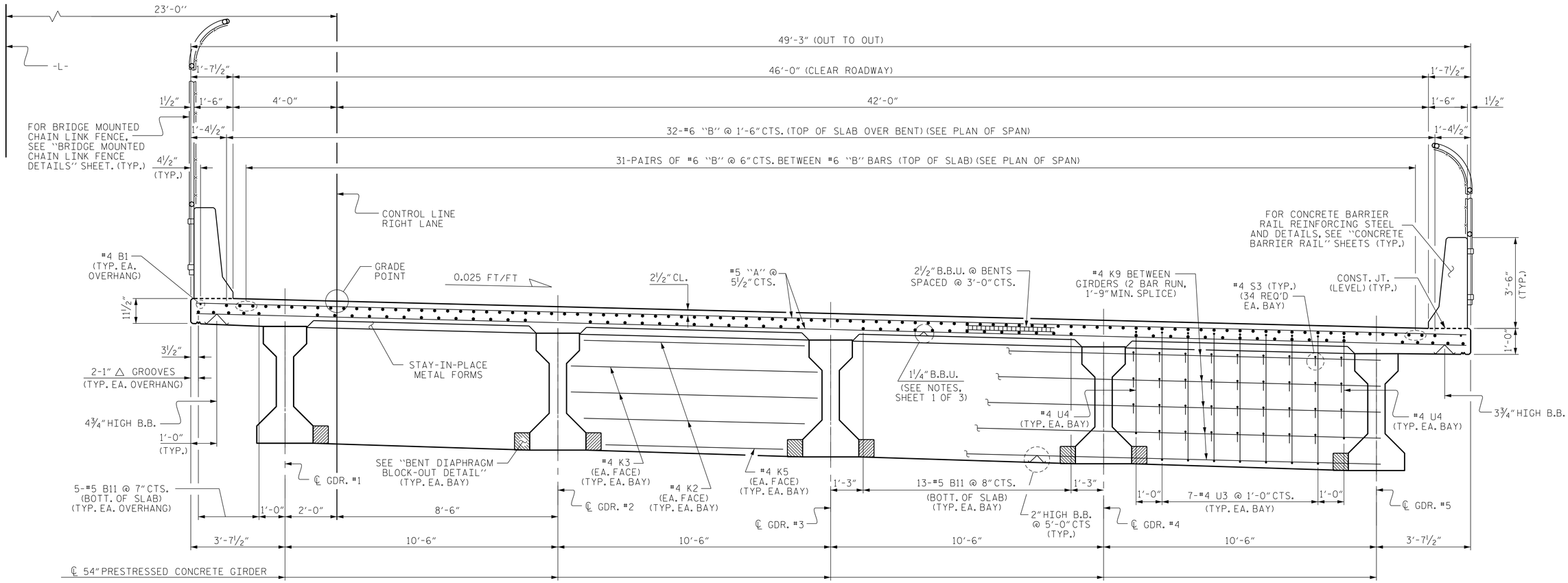

TYPICAL SECTION AT BENTS

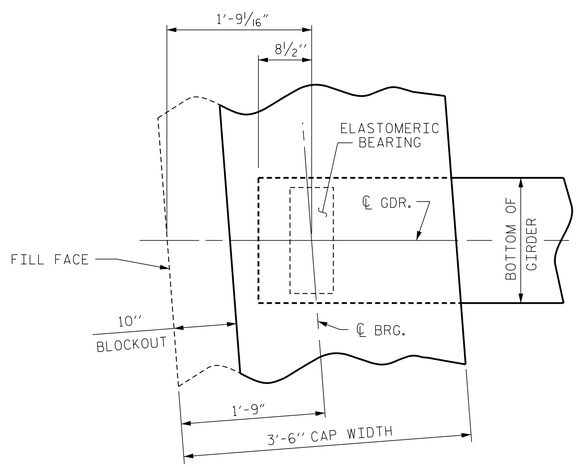

PLAN OF GIRDER @ INTEGRAL END BENT

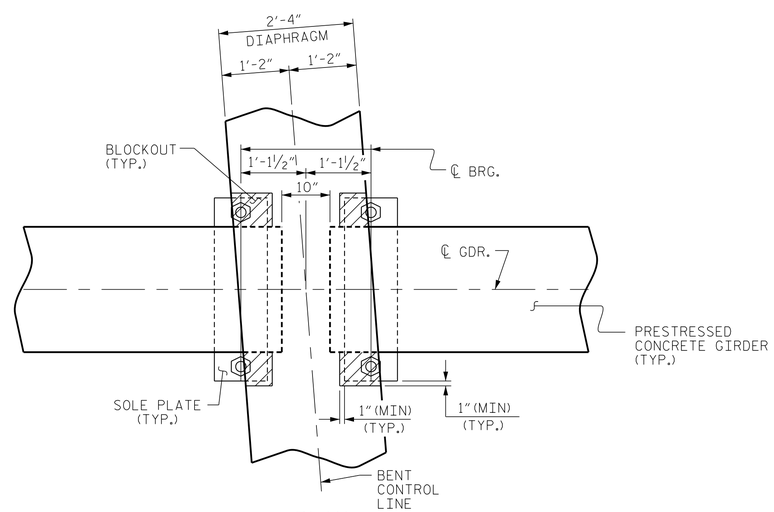

PLAN

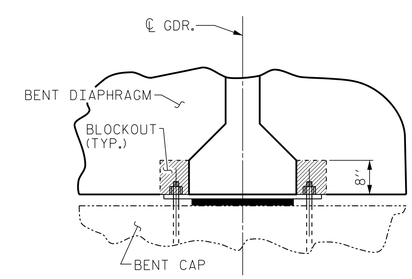

SECTION

BENT DIAPHRAGM BLOCK-OUT DETAIL

PROJECT NO. R-2582A
NORTHAMPTON COUNTY
STATION: 192+85.76 -L-

SHEET 3 OF 3

ENGINEER OF RECORD:

NORTH CAROLINA PROFESSIONAL SEAL 37400 ENGINEER G.M. GILLAND

2/1/2019

WETHERILL ENGINEERING
1223 Jones Franklin Rd.
Raleigh, N.C. 27606
Bus: 919 851 8077
Fax: 919 851 8107
LICENSE NO. F-0377

STATE OF NORTH CAROLINA
DEPARTMENT OF TRANSPORTATION
RALEIGH

SUPERSTRUCTURE
TYPICAL SECTION
(RIGHT LANE)

REVISIONS						SHEET NO.
NO.	BY:	DATE:	NO.	BY:	DATE:	S4-8
1			3			TOTAL SHEETS
2			4			38

DRAWN BY : D. HODGE DATE : 10/18
CHECKED BY : G.M. GILLAND DATE : 11/18

DOCUMENT NOT CONSIDERED FINAL UNLESS ALL SIGNATURES COMPLETED

P:\2018\18127.02 R-2582A\Structures\Revision (Site 2)\Site 2\DGN\RIGHT LANE\R2582A_SMU_ TS_650129rev.dgn
2/1/2019 7:56:06 AM

DocuSign Envelope ID: 224528F0-0F95-4F76-A9C5-38258D5BEEA0

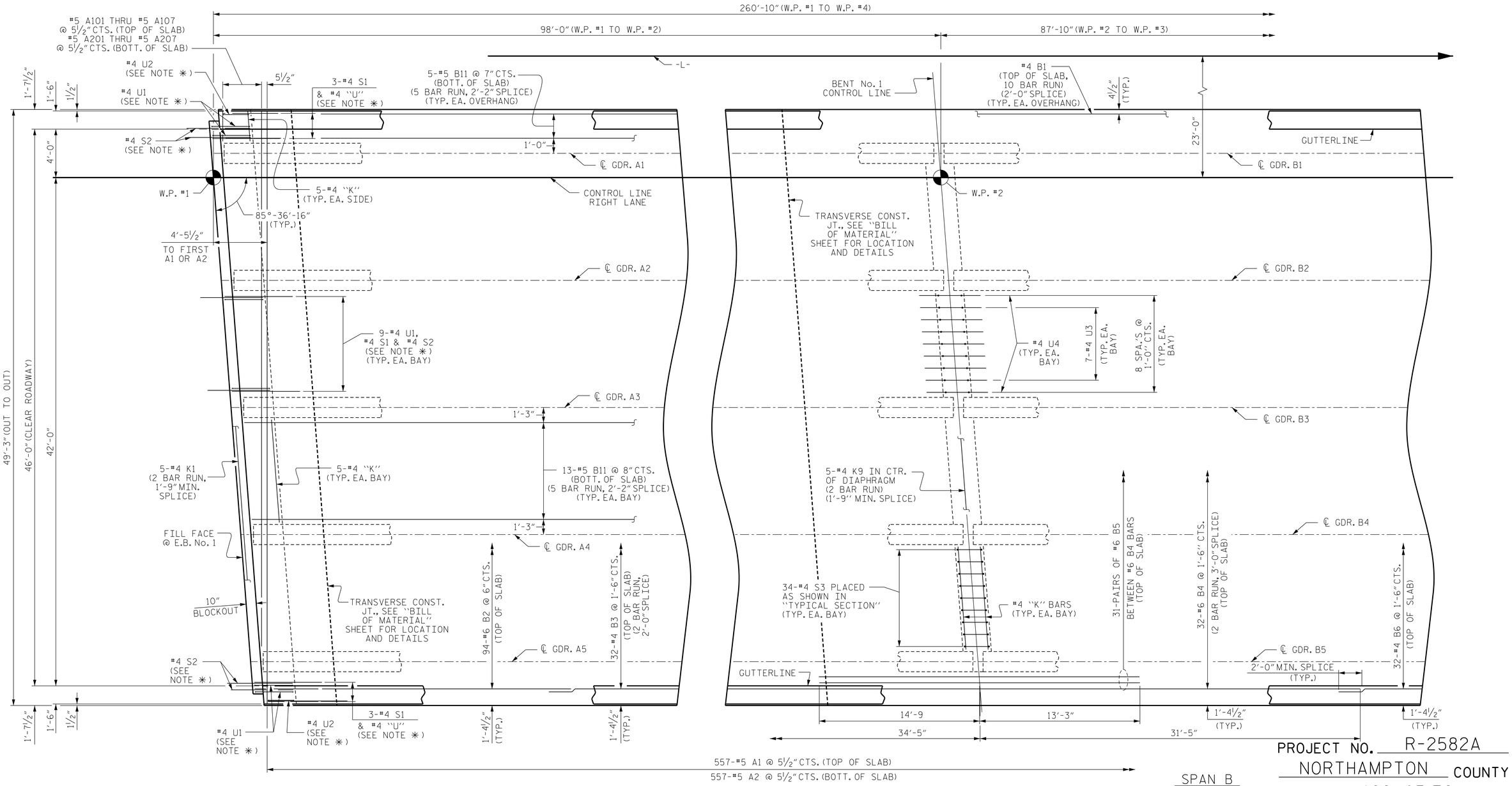

SPAN A

SPAN B

PROJECT NO. R-2582A

NORTHAMPTON COUNTY

STATION: 192+85.76 -L-

SHEET 1 OF 3

PARTIAL PLAN OF SPAN

FOR LOCATION OF INTERMEDIATE DIAPHRAGMS, SEE "FRAMING PLAN" SHEET.

FOR CONCRETE BARRIER RAIL DETAILS AND REINFORCING STEEL, SEE "CONCRETE BARRIER RAIL" SHEETS.

✳ THESE BARS ARE TO MATCH SPACING OF THE #4 "V" BARS IN END BENT.

DRAWN BY : D. HODGE DATE : 11/18

CHECKED BY : G.M. GILLAND DATE : 11/18

DOCUMENT NOT CONSIDERED FINAL UNLESS ALL SIGNATURES COMPLETED

ENGINEER OF RECORD: 3/26/2019

NORTH CAROLINA PROFESSIONAL SEAL 37400 ENGINEER GREGORY M. GILLAND

DocuSigned by: Gregory M. Gilland

WETHERILL ENGINEERING

1223 Jones Franklin Rd.
Raleigh, N.C. 27606
Bus: 919 851 8077
Fax: 919 851 8107
LICENSE NO. F-0377

STATE OF NORTH CAROLINA
DEPARTMENT OF TRANSPORTATION
RALEIGH

SUPERSTRUCTURE

PLAN OF SPANS
(RIGHT LANE)

REVISIONS						SHEET NO.
NO.	BY:	DATE:	NO.	BY:	DATE:	S4-9
1			3			TOTAL SHEETS
2			4			38

P:\2018\18127.02 R-2582A\Structures\Revision (Site 2)\Site 2\DGN\RIGHT LANE\R2582A_SMU_ PS_650129rev.dgn
3/25/2019 8:17:31 AM

DocuSign Envelope ID: 817B1D73-88BA-49A0-9F22-45781A03197E

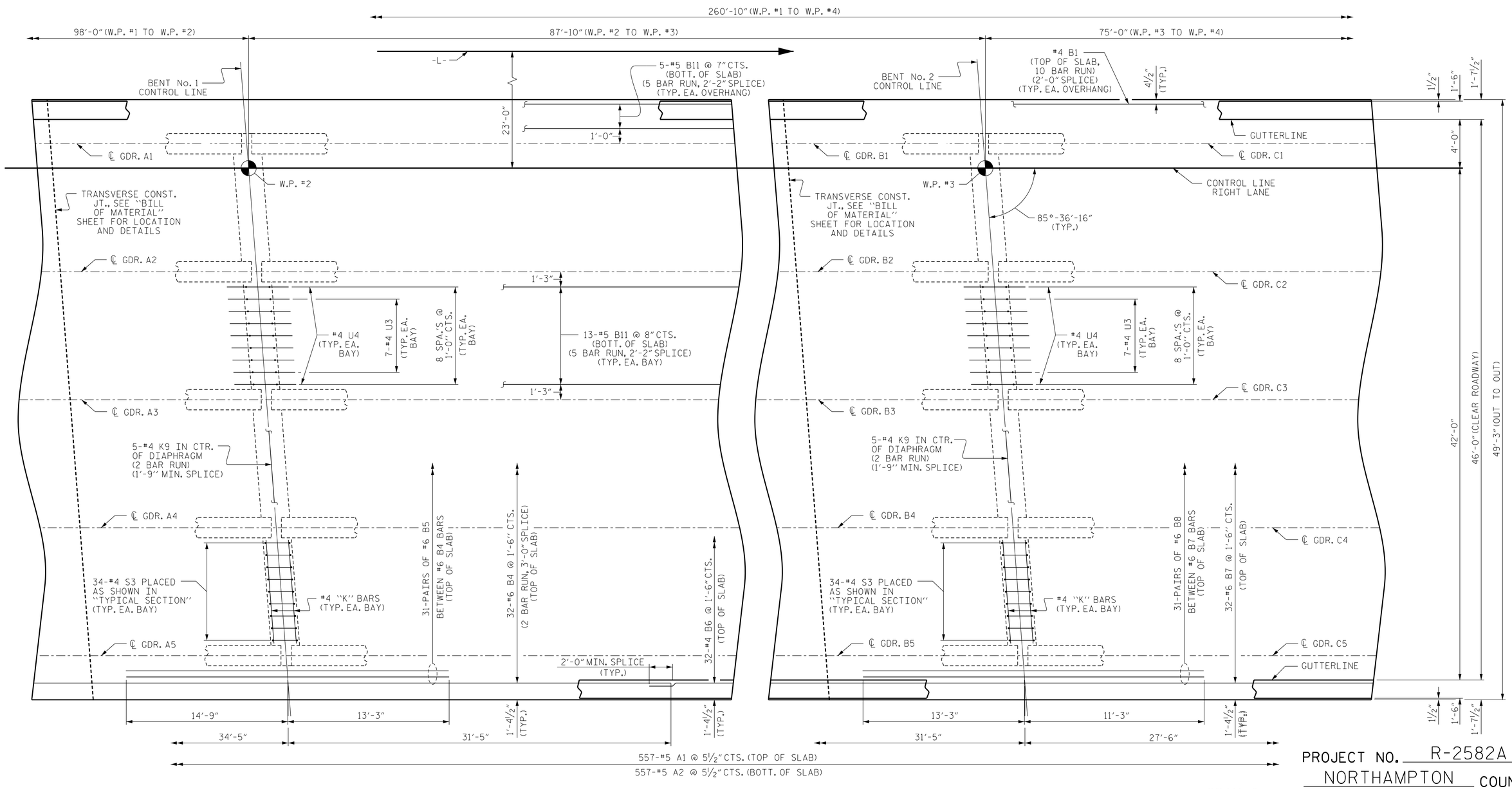

PROJECT NO. R-2582A

NORTHAMPTON COUNTY

STATION: 192+85.76 -L-

SHEET 2 OF 3

PARTIAL PLAN OF SPAN

FOR LOCATION OF INTERMEDIATE DIAPHRAGMS, SEE "FRAMING PLAN" SHEET.

FOR CONCRETE BARRIER RAIL DETAILS AND REINFORCING STEEL, SEE "CONCRETE BARRIER RAIL" SHEETS.

ENGINEER OF RECORD:

NORTH CAROLINA PROFESSIONAL SEAL 37400 ENGINEER GREGORY MICHAEL GILLAND

DocuSigned by: Gregory Michael Gilland
A996A960E5204D0...
2/1/2019

WETHERILL ENGINEERING
1223 Jones Franklin Rd.
Raleigh, N.C. 27606
Bus: 919 851 8077
Fax: 919 851 8107
LICENSE NO. F-0377

STATE OF NORTH CAROLINA
DEPARTMENT OF TRANSPORTATION
RALEIGH

SUPERSTRUCTURE

PLAN OF SPANS
(RIGHT LANE)

REVISIONS						SHEET NO.
NO.	BY:	DATE:	NO.	BY:	DATE:	S4-10
1			3			TOTAL SHEETS
2			4			38

DRAWN BY : D. HODGE DATE : 11/18
CHECKED BY : G.M. GILLAND DATE : 11/18

DOCUMENT NOT CONSIDERED FINAL UNLESS ALL SIGNATURES COMPLETED

P:\2018\18127.02 R-2582A\Structures\Revision (Site 2)\Site 2\DGN\RIGHT LANE\R2582A_SMU_ PS_650129rev.dgn
2/1/2019 7:57:19 AM

DocuSign Envelope ID: 224528F0-0F95-4F76-A9C5-38258D5BEEA0

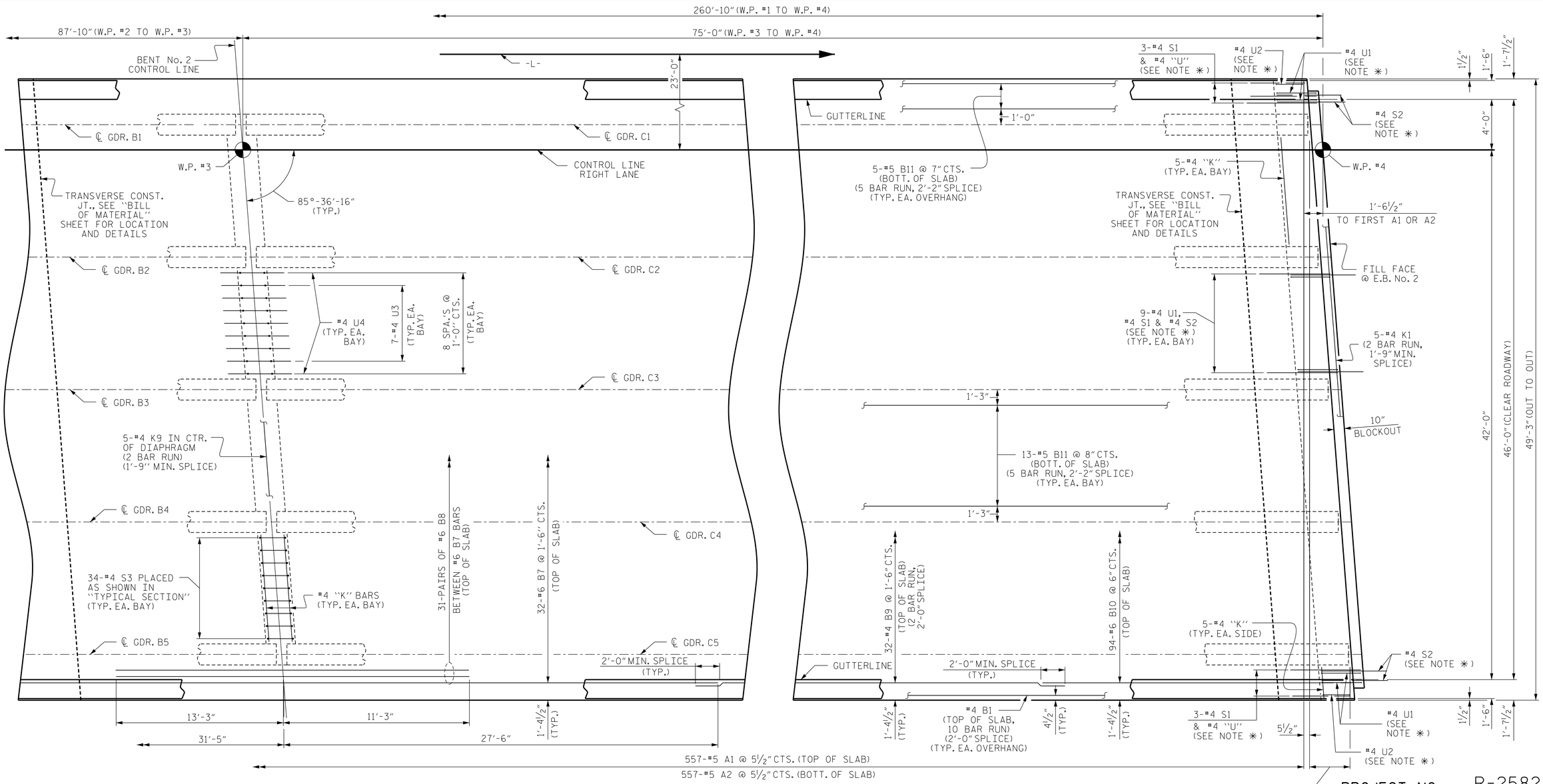

PROJECT NO. R-2582A

NORTHAMPTON COUNTY

STATION: 192+85.76 -L-

SHEET 3 OF 3

PARTIAL PLAN OF SPAN

FOR LOCATION OF INTERMEDIATE DIAPHRAGMS, SEE "FRAMING PLAN" SHEET.

FOR CONCRETE BARRIER RAIL DETAILS AND REINFORCING STEEL, SEE "CONCRETE BARRIER RAIL" SHEETS.

✳ THESE BARS ARE TO MATCH SPACING OF THE #4 "V" BARS IN END BENT.

ENGINEER OF RECORD:
3/26/2019

NORTH CAROLINA PROFESSIONAL SEAL 37400 ENGINEER GREGORY M. GILLAND

DocuSigned by: Gregory M. Gilland
A9964A80E52046...

WETHERILL ENGINEERING
1223 Jones Franklin Rd.
Raleigh, N.C. 27606
Bus: 919 851 8077
Fax: 919 851 8107
LICENSE NO. F-0377

STATE OF NORTH CAROLINA
DEPARTMENT OF TRANSPORTATION
RALEIGH

SUPERSTRUCTURE

PLAN OF SPANS
(RIGHT LANE)

REVISIONS						SHEET NO.
NO.	BY:	DATE:	NO.	BY:	DATE:	S4-11
1			3			TOTAL SHEETS
2			4			38

DOCUMENT NOT CONSIDERED FINAL UNLESS ALL SIGNATURES COMPLETED

DRAWN BY :	D. HODGE	DATE :	11/18
CHECKED BY :	G.M. GILLAND	DATE :	11/18

P:\2018\18127.02 R-2582A\Structures\Revision (Site 2)\Site 2\DGN\RIGHT LANE\R2582A_SMU_ PS_650129rev.dgn
3/25/2019 8:18:01 AM

DocuSign Envelope ID: 817B1D73-88BA-49A0-9F22-45781A03197E

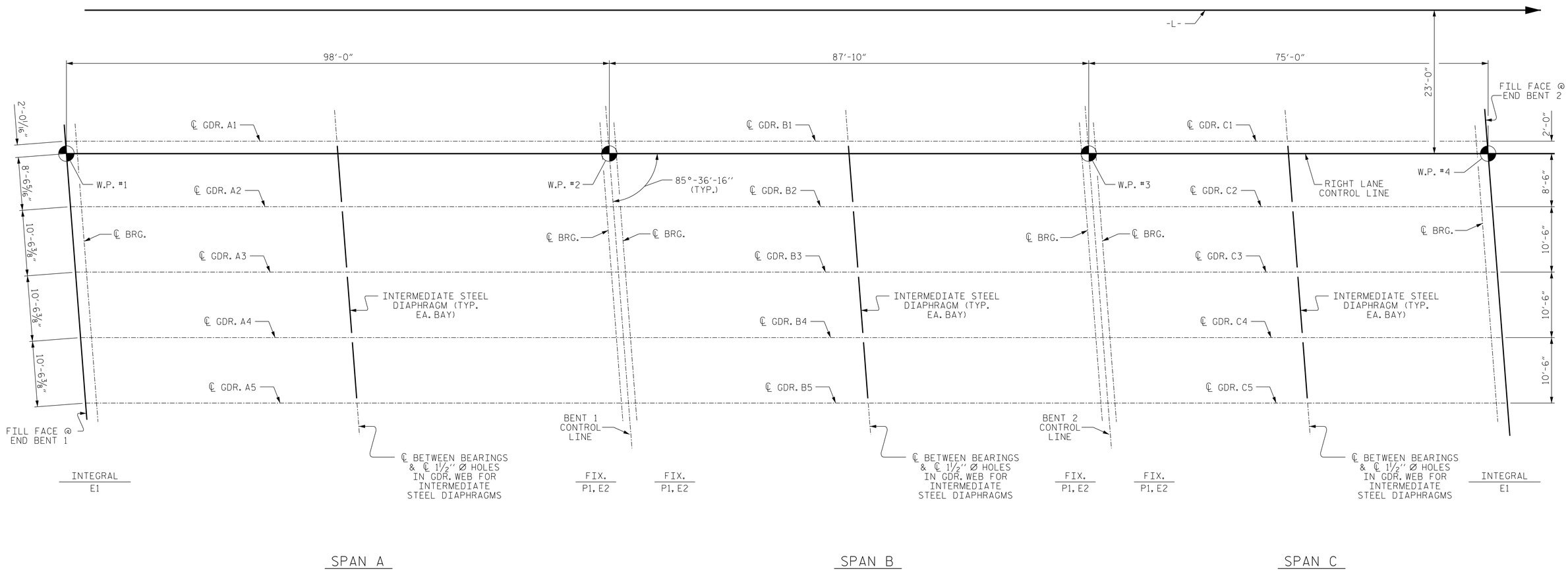

GIRDER LAYOUT

PROJECT NO. R-2582A
NORTHAMPTON COUNTY
STATION: 192+85.76 -L-

ENGINEER OF RECORD:

NORTH CAROLINA PROFESSIONAL SEAL 37400 ENGINEER GREGORY M. GILLAND

DocuSigned by: Gregory M. Gilland
4D6A0A0E3C4A4...
2/1/2019

WETHERILL ENGINEERING
1223 Jones Franklin Rd.
Raleigh, N.C. 27606
Bus: 919 851 8077
Fax: 919 851 8107
LICENSE NO. F-0377

STATE OF NORTH CAROLINA
DEPARTMENT OF TRANSPORTATION
RALEIGH

SUPERSTRUCTURE
GIRDER LAYOUT
(RIGHT LANE)

REVISIONS						SHEET NO.
NO.	BY:	DATE:	NO.	BY:	DATE:	S4-12
1			3			TOTAL SHEETS
2			4			38

DRAWN BY : D. HODGE DATE : 10/18
CHECKED BY : G.M. GILLAND DATE : 11/18

DOCUMENT NOT CONSIDERED FINAL UNLESS ALL SIGNATURES COMPLETED

P:\2018\18127.02 R-2582A\Structures\Revision (Site 2)\Site 2\DGN\RIGHT LANE\R2582A_SMU_ FP_650129rev.dgn
2/1/2019 7:58:21 AM

DocuSign Envelope ID: 817B1D73-88BA-49A0-9F22-45781A03197E

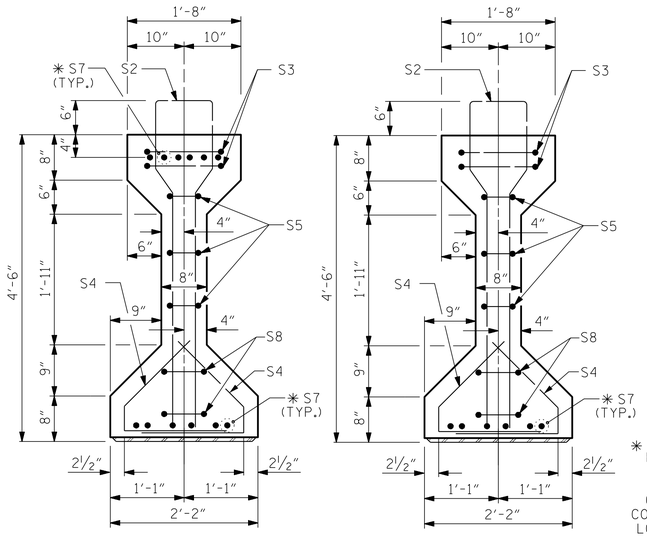

SECTION A-A

SECTION B-B

✱ FOR S7 BARS, SEE DETAIL "A" OF PRESTRESSED CONCRETE GIRDER CONTINUOUS FOR LIVE LOAD DETAILS SHEET

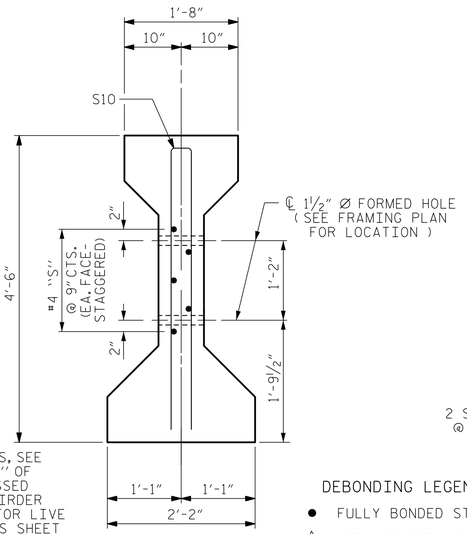

SECTION C-C

(S1 BARS NOT SHOWN)

DEBONDING LEGEND

- ● FULLY BONDED STRANDS
- ◬ STRANDS DEBONDED FOR 8'-0" FROM END OF GIRDER
- ⦿ STRANDS DEBONDED FOR 16'-0" FROM END OF GIRDER

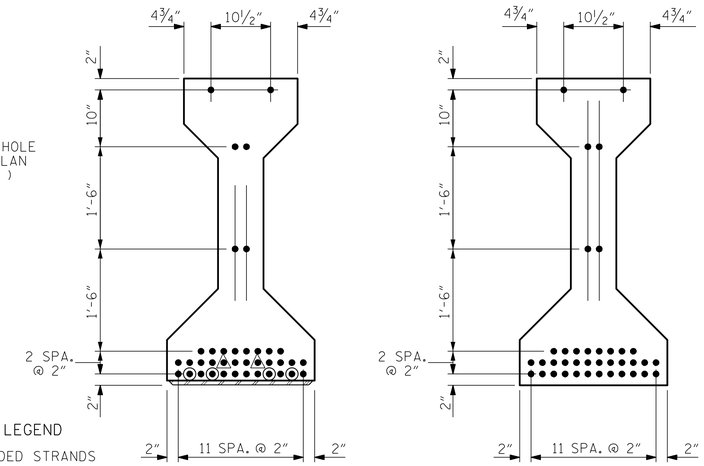

AT END OF GIRDER

AT ℄ OF GIRDER

0.6" Ø LOW RELAXATION STRAND LAYOUT

0.6" Ø L. R. GRADE 270 STRANDS

AREA (SQUARE INCHES)	ULTIMATE STRENGTH (LBS. PER STRAND)	APPLIED PRESTRESS (LBS. PER STRAND)
0.217	58,600	43,950

REINFORCING STEEL FOR ONE GIRDER

BAR	NUMBER	SIZE	TYPE	LENGTH	WEIGHT
S1	74	#4	1	10'-8"	527
S2	14	#6	1	10'-8"	224
S3	4	#4	2	9'-1"	24
S4	68	#4	3	3'-5"	155
S5	6	#4	2	8'-5"	34
✱ S7	18	#5	STR	3'-8"	69
S8	4	#4	2	8'-7"	23
S9	2	#3	STR	1'-10"	1
S10	2	#5	2	8'-8"	18
S11	5	#4	STR	7'-0"	23
S13	1	#3	STR	1'-4"	1

✱ NOTE: S7 BARS SHALL BE BENT BEFORE SHIPMENT. HEAT BENDING SHALL NOT BE ALLOWED.

BAR TYPES

ALL BAR DIMENSIONS ARE OUT-TO-OUT

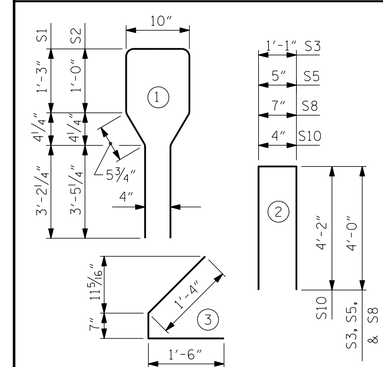

QUANTITIES FOR ONE GIRDER

	REINFORCING STEEL	9000 PSI CONCRETE	0.6" Ø L. R. STRANDS
	LB.	C.Y.	No.
	1,099	19.6	38

GIRDERS REQUIRED

NUMBER	LENGTH	TOTAL LENGTH
5	96'-6½"	482.71

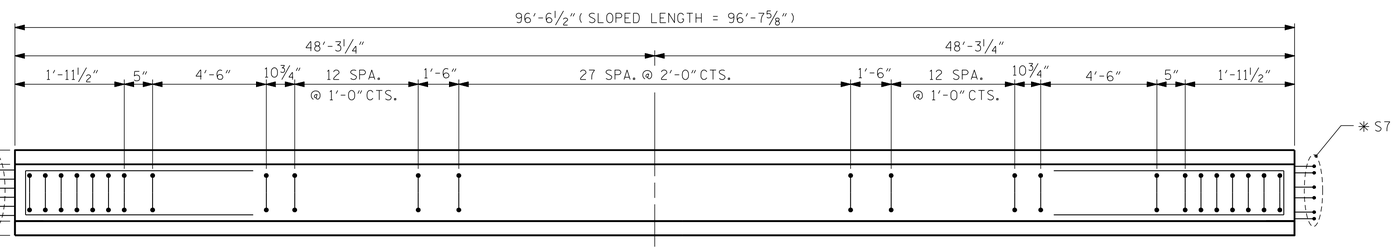

PLAN OF GIRDER

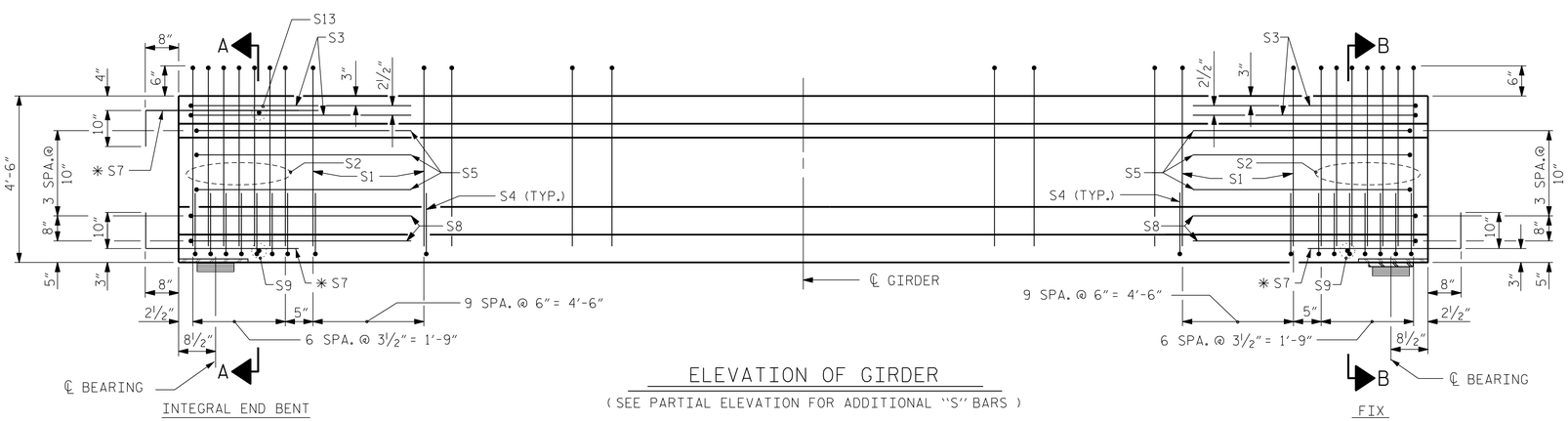

ELEVATION OF GIRDER

(SEE PARTIAL ELEVATION FOR ADDITIONAL "S" BARS)

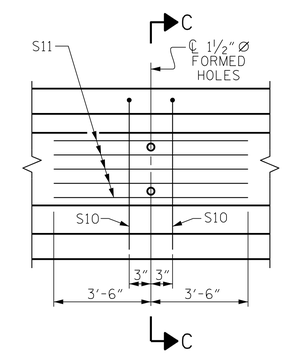

PARTIAL ELEVATION

SHOWING INTERMEDIATE DIAPHRAGM REINFORCING STEEL FOR GIRDERS

PROJECT NO. R-2582A

NORTHAMPTON COUNTY

STATION: 192+85.76 -L-

SHEET 1 OF 5

ENGINEER OF RECORD:

NORTH CAROLINA PROFESSIONAL SEAL 37400 ENGINEER GREGORY R. GILLAND

A99BA9D0E52D485...

2/1/2019

WETHERILL ENGINEERING

1223 Jones Franklin Rd.
Raleigh, N.C. 27606
Bus: 919 851 8077
Fax: 919 851 8107
LICENSE NO. F-0377

STATE OF NORTH CAROLINA
DEPARTMENT OF TRANSPORTATION
RALEIGH

STANDARD
AASHTO TYPE IV
PRESTRESSED CONCRETE GIRDER
CONTINUOUS FOR LIVE LOAD
(RIGHT LANE)
(SPAN A)

REVISIONS						SHEET NO.
NO.	BY:	DATE:	NO.	BY:	DATE:	S4-13
1			3			TOTAL SHEETS
2			4			38

DOCUMENT NOT CONSIDERED FINAL UNLESS ALL SIGNATURES COMPLETED

ASSEMBLED BY : D. HODGE	DATE : 11/18		
CHECKED BY : G.M. GILLAND	DATE : 11/18		
DRAWN BY : ELR 8/91	REV. 10/1/11	MAA/GM	
CHECKED BY : GRP 8/91	REV. 1/15	MAA/TMG	
	REV. 12/17	MAA/THC	

P:\2018\18127.02 R-2582A\Structures\Revision (Site 2\Site 2\DGNVRIGHT LANE\R2582A_SMU_ PCG_650129rev.dgn
2/1/2019 7:58:57 AM

STD. NO. PCG6 (Sht. 2)

DocuSign Envelope ID: 817B1D73-88BA-49A0-9F22-45781A03197E

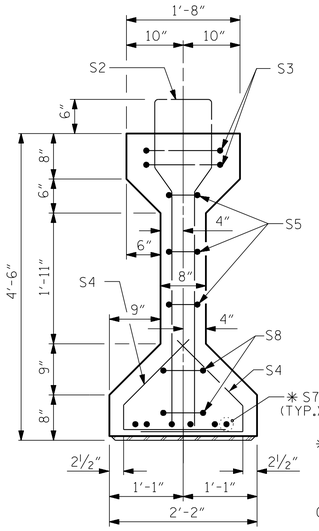

SECTION B-B

✱ FOR S7 BARS, SEE DETAIL "A" OF PRESTRESSED CONCRETE GIRDER CONTINUOUS FOR LIVE LOAD DETAILS SHEET

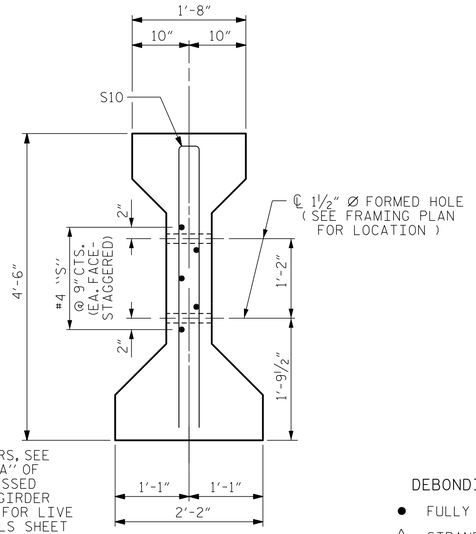

SECTION C-C

(S1 BARS NOT SHOWN)

DEBONDING LEGEND

- ● FULLY BONDED STRANDS
- ▲ STRANDS DEBONDED FOR 8'-0" FROM END OF GIRDER
- ⊙ STRANDS DEBONDED FOR 16'-0" FROM END OF GIRDER

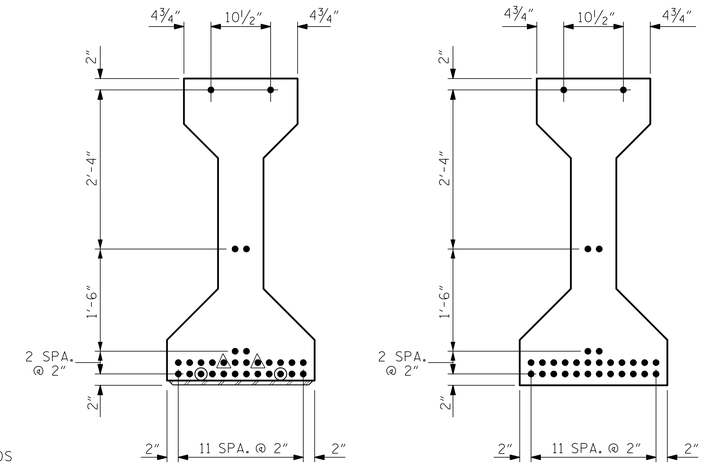

0.6" Ø LOW RELAXATION STRAND LAYOUT

0.6" Ø L. R. GRADE 270 STRANDS

AREA (SQUARE INCHES)	ULTIMATE STRENGTH (LBS. PER STRAND)	APPLIED PRESTRESS (LBS. PER STRAND)
0.217	58,600	43,950

REINFORCING STEEL FOR ONE GIRDER

BAR	NUMBER	SIZE	TYPE	LENGTH	WEIGHT
S1	72	#4	1	10'-8"	513
S2	12	#6	1	10'-8"	192
S3	4	#4	2	9'-1"	24
S4	64	#4	3	3'-5"	146
S5	6	#4	2	8'-5"	34
✱ S7	12	#5	STR	3'-8"	46
S8	4	#4	2	8'-7"	23
S9	2	#3	STR	1'-10"	1
S10	2	#5	2	8'-8"	18
S11	5	#4	STR	7'-0"	23

✱ NOTE: S7 BARS SHALL BE BENT BEFORE SHIPMENT. HEAT BENDING SHALL NOT BE ALLOWED.

BAR TYPES

ALL BAR DIMENSIONS ARE OUT-TO-OUT

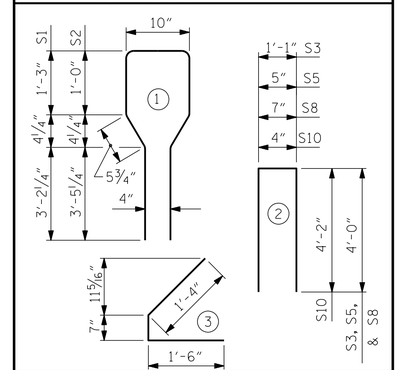

QUANTITIES FOR ONE GIRDER

	REINFORCING STEEL	7000 PSI CONCRETE	0.6" Ø L. R. STRANDS
	LB.	C.Y.	No.
	1020	17.7	30

GIRDERS REQUIRED

NUMBER	LENGTH	TOTAL LENGTH
5	87'-0"	435.00

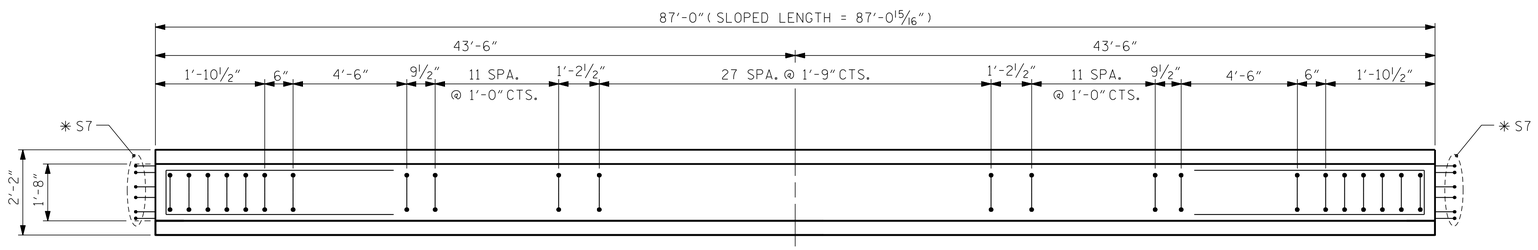

PLAN OF GIRDER

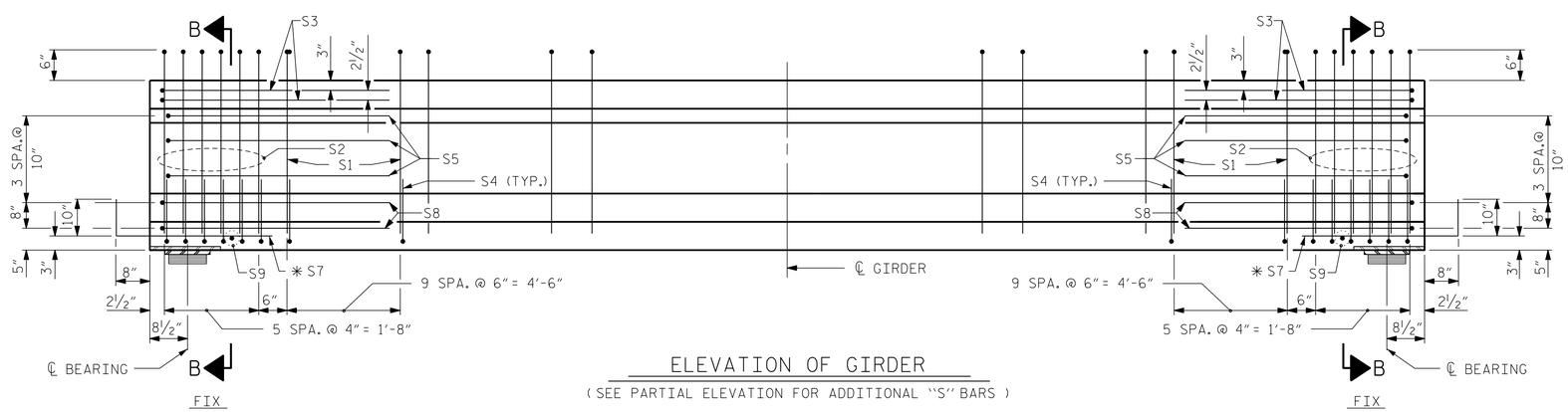

ELEVATION OF GIRDER

(SEE PARTIAL ELEVATION FOR ADDITIONAL "S" BARS)

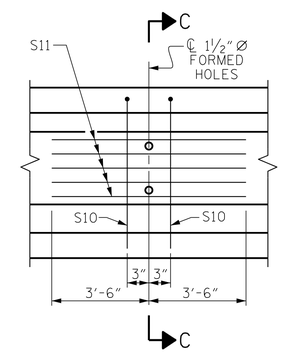

PARTIAL ELEVATION

SHOWING INTERMEDIATE DIAPHRAGM REINFORCING STEEL FOR GIRDERS

PROJECT NO. R-2582A

NORTHAMPTON COUNTY

STATION: 192+85.76 -L-

SHEET 2 OF 5

ENGINEER OF RECORD:

NORTH CAROLINA PROFESSIONAL SEAL 37400 ENGINEER G.M. GILLAND

2/1/2019

WETHERILL ENGINEERING

1223 Jones Franklin Rd.
Raleigh, N.C. 27606
Bus: 919 851 8077
Fax: 919 851 8107
LICENSE NO. F-0377

STATE OF NORTH CAROLINA
DEPARTMENT OF TRANSPORTATION
RALEIGH

STANDARD
AASHTO TYPE IV
PRESTRESSED CONCRETE GIRDER
CONTINUOUS FOR LIVE LOAD
(RIGHT LANE)
(SPAN B)

REVISIONS							SHEET NO.
NO.	BY:	DATE:	NO.	BY:	DATE:		S4-14
1			3				TOTAL SHEETS
2			4				38

DOCUMENT NOT CONSIDERED FINAL UNLESS ALL SIGNATURES COMPLETED

ASSEMBLED BY : D. HODGE	DATE : 11/18		
CHECKED BY : G.M. GILLAND	DATE : 11/18		
DRAWN BY : ELR 8/91	REV. 10/1/11	MAA/GM	
CHECKED BY : GRP 8/91	REV. 1/15	MAA/TMG	
	REV. 12/17	MAA/THC	

P:\2018\18127.02 R-2582A\Structures\Revision (Site 2)\Site 2\DGN\RIGHT LANE\R2582A_SMU_ PCG_650129rev.dgn
2/1/2019 7:59:16 AM

STD. NO. PCG6 (Sht. 1)

DocuSign Envelope ID: 817B1D73-88BA-49A0-9F22-45781A03197E

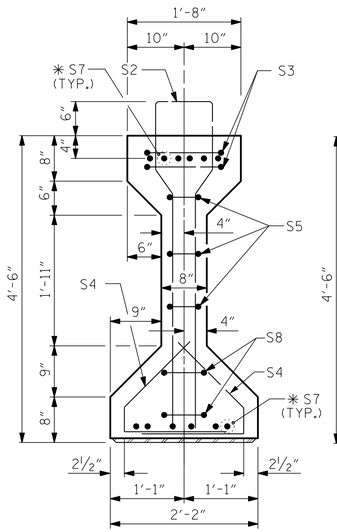

SECTION A-A

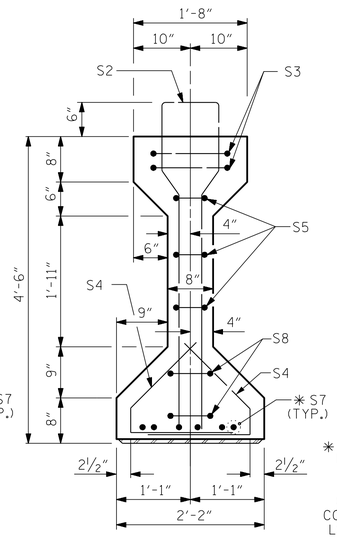

SECTION B-B

✱ FOR S7 BARS, SEE DETAIL "A" OF PRESTRESSED CONCRETE GIRDER CONTINUOUS FOR LIVE LOAD DETAILS SHEET

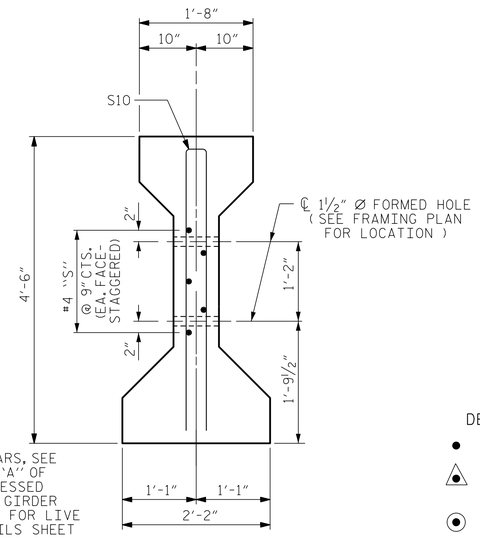

SECTION C-C

(S1 BARS NOT SHOWN)

DEBONDING LEGEND

- ● FULLY BONDED STRANDS
- △ STRANDS DEBONDED FOR 8'-0" FROM END OF GIRDER
- ⊙ STRANDS DEBONDED FOR 16'-0" FROM END OF GIRDER

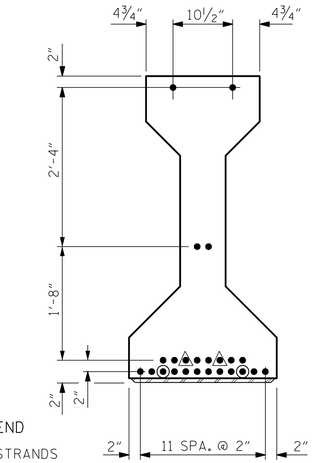

AT END OF GIRDER

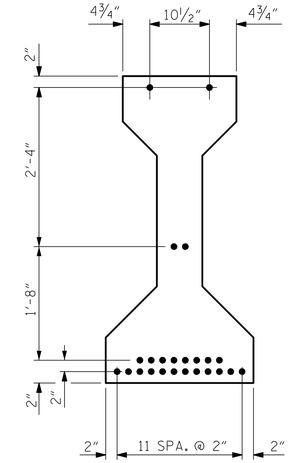

AT ℄ OF GIRDER

0.6" Ø LOW RELAXATION STRAND LAYOUT

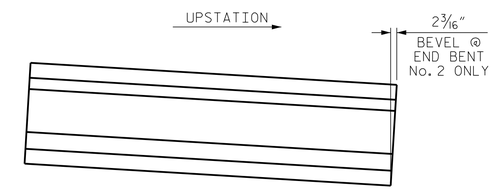

ELEVATION

SHOWING BEVELED END OF GIRDERS

0.6" Ø L. R. GRADE 270 STRANDS

AREA (SQUARE INCHES)	ULTIMATE STRENGTH (LBS. PER STRAND)	APPLIED PRESTRESS (LBS. PER STRAND)
0.217	58,600	43,950

REINFORCING STEEL FOR ONE GIRDER

BAR	NUMBER	SIZE	TYPE	LENGTH	WEIGHT
S1	66	#4	1	10'-8"	470
S2	12	#6	1	10'-8"	192
S3	4	#4	2	9'-1"	24
S4	64	#4	3	3'-5"	146
S5	6	#4	2	8'-5"	34
✱ S7	18	#5	STR	3'-8"	69
S8	4	#4	2	8'-7"	23
S9	2	#3	STR	1'-10"	1
S10	2	#5	2	8'-8"	18
S11	5	#4	STR	7'-0"	23
S13	1	#3	STR	1'-4"	1

✱ NOTE: S7 BARS SHALL BE BENT BEFORE SHIPMENT. HEAT BENDING SHALL NOT BE ALLOWED.

BAR TYPES

ALL BAR DIMENSIONS ARE OUT-TO-OUT

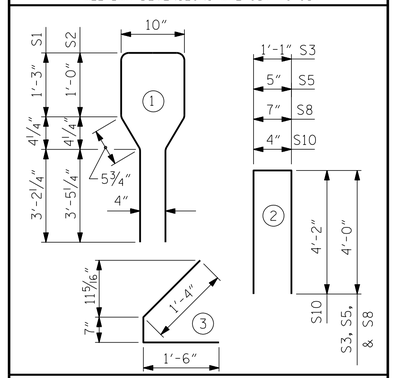

QUANTITIES FOR ONE GIRDER

	REINFORCING STEEL LB.	5000 PSI CONCRETE C.Y.	0.6" Ø L.R. STRANDS No.
	1,001	14.9	24

GIRDERS REQUIRED

NUMBER	LENGTH	TOTAL LENGTH
5	73'-6½"	367.71

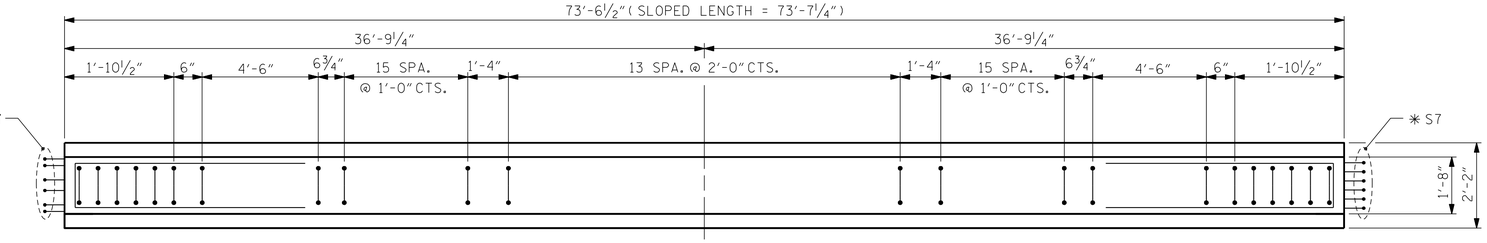

PLAN OF GIRDER

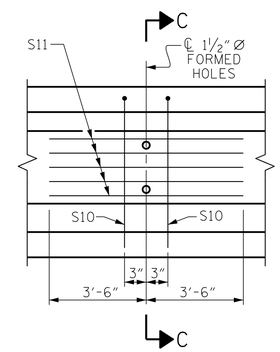

PARTIAL ELEVATION

SHOWING INTERMEDIATE DIAPHRAGM REINFORCING STEEL FOR GIRDERS

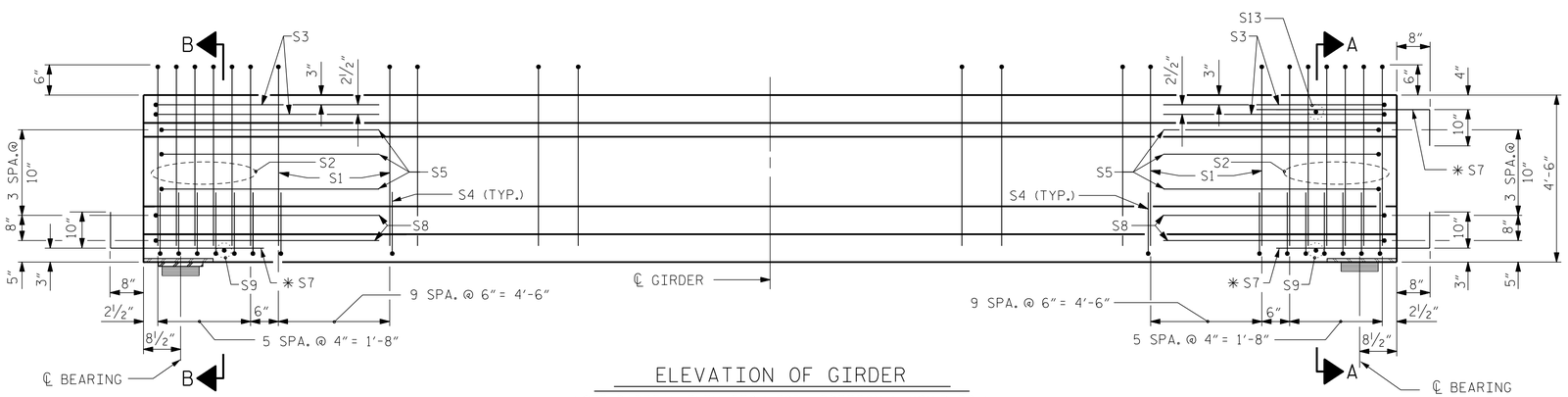

ELEVATION OF GIRDER

(SEE PARTIAL ELEVATION FOR ADDITIONAL "S" BARS)

PROJECT NO. R-2582A

NORTHAMPTON COUNTY

STATION: 192+85.76 -L-

SHEET 3 OF 5

ENGINEER OF RECORD:

NORTH CAROLINA PROFESSIONAL SEAL 37400 ENGINEER GREGORY R. GILLAND

DocuSigned by: Gregory R. Gilland 2/1/2019

WETHERILL ENGINEERING

1223 Jones Franklin Rd.
Raleigh, N.C. 27606
Bus: 919 851 8077
Fax: 919 851 8107
LICENSE NO. F-0377

STATE OF NORTH CAROLINA
DEPARTMENT OF TRANSPORTATION
RALEIGH

STANDARD
AASHTO TYPE IV
PRESTRESSED CONCRETE GIRDER
CONTINUOUS FOR LIVE LOAD
(RIGHT LANE)
(SPAN C)

REVISIONS						SHEET NO.
NO.	BY:	DATE:	NO.	BY:	DATE:	S4-15
1			3			TOTAL SHEETS
2			4			38

DOCUMENT NOT CONSIDERED FINAL UNLESS ALL SIGNATURES COMPLETED

ASSEMBLED BY : D. HODGE	DATE : 11/18		
CHECKED BY : G.M. GILLAND	DATE : 11/18		
DRAWN BY : ELR 8/91	REV. 10/1/11	MAA/GM	
CHECKED BY : GRP 8/91	REV. 1/15	MAA/TMG	
	REV. 12/17	MAA/THC	

P:\2018\18127.02_R-2582A\Structures\Revision (Site 2)\Site 2\DGN\RIGHT LANE\R2582A_SMU_PCG_650129rev.dgn
2/1/2019 7:59:42 AM

STD. NO. PCG6 (Sht. 2)

DocuSign Envelope ID: 817B1D73-88BA-49A0-9F22-45781A03197E

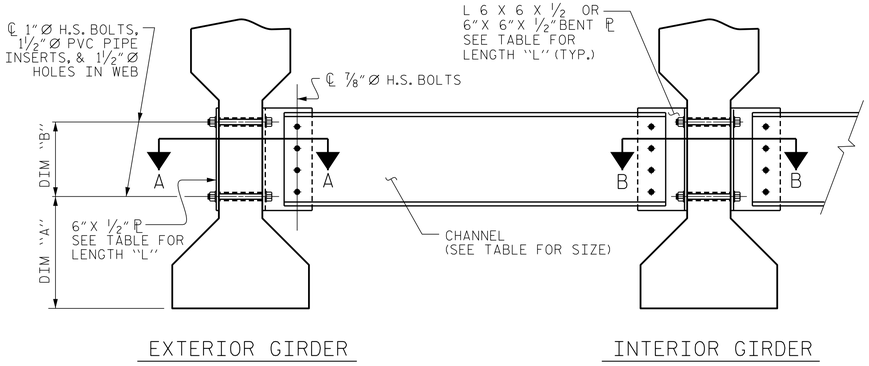

PART SECTION AT INTERMEDIATE DIAPHRAGM

(TYPE IV GIRDER SHOWN)

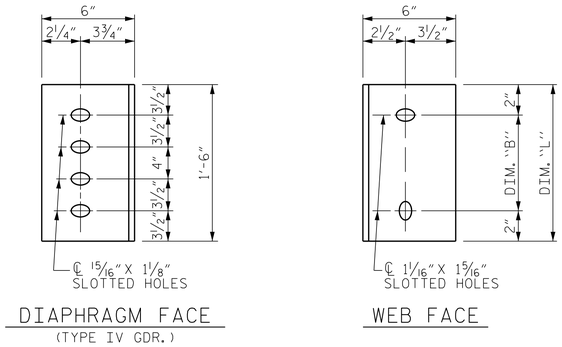

DIAPHRAGM FACE

(TYPE IV GDR.)

WEB FACE

CONNECTOR PLATE DETAILS

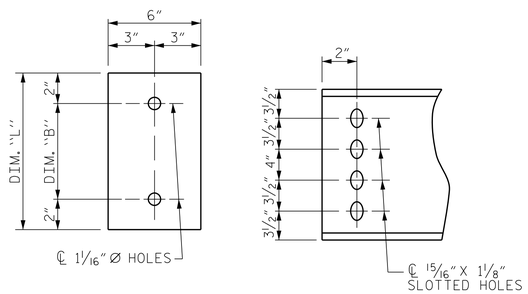

PLATE DETAILS

CHANNEL END

(TYPE IV GDR.)

STRUCTURAL STEEL NOTES

ALL INTERMEDIATE DIAPHRAGM STEEL AND CONNECTOR PLATES SHALL BE AASHTO M270 GRADE 50 OR APPROVED EQUAL.

TENSION ON THE ASTM A325 BOLTS THROUGH THE CHANNEL MEMBER SHALL BE CALIBRATED USING DIRECT TENSION INDICATOR WASHERS IN ACCORDANCE WITH THE STANDARD SPECIFICATIONS.

TENSION ON THE ASTM A449 BOLTS THROUGH THE GIRDER WEB SHALL BE SNUG TIGHTENED FOLLOWED BY AN ADDITIONAL ¼ TURN.

THE PLATES, BENT PLATES, CHANNELS, AND ANGLES SHALL BE GALVANIZED OR METALLIZED IN ACCORDANCE WITH THE STANDARD SPECIFICATIONS. FOR THERMAL SPRAYED COATINGS (METALLIZATION), SEE SPECIAL PROVISIONS.

FOR METALLIZATION, APPLY A THERMAL SPRAYED COATING WITH A SEAL COAT TO ALL STEEL DIAPHRAGM SURFACES IN ACCORDANCE WITH THE DEPARTMENTS THERMAL SPRAYED COATINGS (METALLIZATION) PROGRAM, THERMAL SPRAYED COATINGS SPECIAL PROVISION AND SECTION 442 OF THE STANDARD SPECIFICATIONS.

GALVANIZE THE HIGH STRENGTH BOLTS, NUTS, WASHERS AND DIRECT TENSION INDICATORS IN ACCORDANCE WITH THE STANDARD SPECIFICATIONS.

USE AN ASTM F436 HARDENED WASHER WITH STANDARD AND SLOTTED HOLES UNDER EACH BOLT HEAD AND NUT.

FOR BOLTS THROUGH THE GIRDER WEB, PROVIDE SUFFICIENT LENGTH OF THREADS ON ALL BOLTS TO ACCOMMODATE WASHERS AND THE THICKNESS OF CONNECTING MEMBER PLUS AT LEAST ¼" PROJECTION BEYOND THE NUT.

INTERMEDIATE DIAPHRAGM ASSEMBLY SHALL COMPLY WITH SECTION 1072 OF THE STANDARD SPECIFICATIONS.

SUBMIT TWO SETS OF WORKING DRAWINGS FOR THE INTERMEDIATE DIAPHRAGM ASSEMBLY FOR REVIEW, COMMENTS AND ACCEPTANCE. AFTER REVIEW, COMMENTS, AND ACCEPTANCE, SUBMIT SEVEN SETS FOR DISTRIBUTION.

IN THE EXTERIOR BAYS, PLACE TEMPORARY STRUTS BETWEEN PRESTRESSED GIRDERS ADJACENT TO THE STEEL DIAPHRAGMS. STRUTS SHALL REMAIN IN PLACE 3 DAYS AFTER CONCRETE IS PLACED.

THE COST OF THE STEEL DIAPHRAGMS AND ASSEMBLIES SHALL BE INCLUDED IN THE UNIT PRICE BID FOR PRESTRESSED CONCRETE GIRDERS.

TABLE

GIRDER TYPE	CHANNEL SIZE	DIM "A"	DIM "B"	DIM "L"
IV	MC 18 x 42.7	1'-9½"	1'-2"	1'-6"

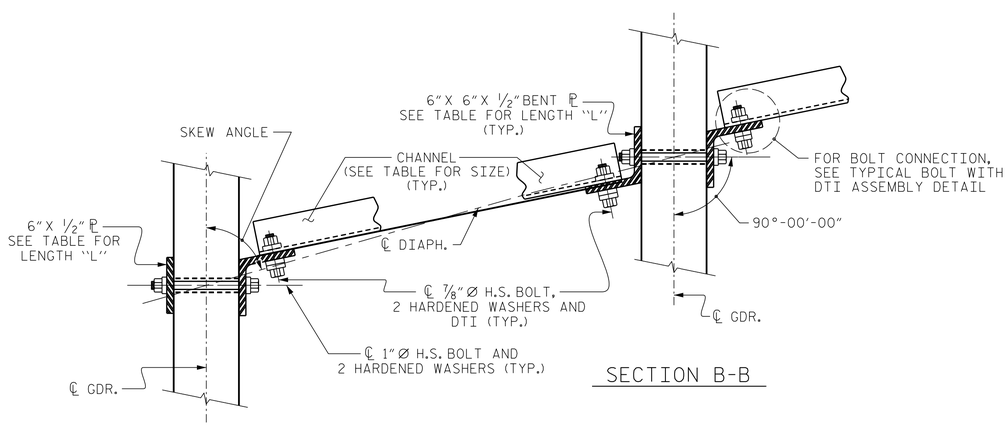

SECTION B-B

SECTION A-A

CONNECTION DETAILS

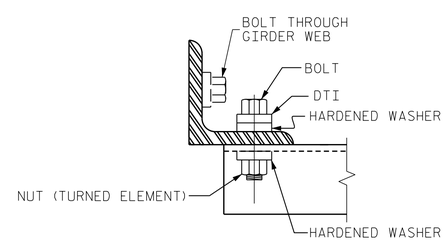

BOLT WITH DTI ASSEMBLY DETAIL

PROJECT NO. R-2582A

NORTHAMPTON COUNTY

STATION: 192+85.76 -L-

SHEET 4 OF 5

ENGINEER OF RECORD:

NORTH CAROLINA PROFESSIONAL SEAL 37400 ENGINEER GREGORY M. GILLAND

A99AA8DC... 2/1/2019

WETHERILL ENGINEERING

1223 Jones Franklin Rd.
Raleigh, N.C. 27606
Bus: 919 851 8077
Fax: 919 851 8107
LICENSE NO. F-0377

STATE OF NORTH CAROLINA
DEPARTMENT OF TRANSPORTATION
RALEIGH

STANDARD
INTERMEDIATE
STEEL DIAPHRAGMS
FOR TYPE IV PRESTRESSED
CONCRETE GIRDERS
(RIGHT LANE)

REVISIONS						SHEET NO.
NO.	BY:	DATE:	NO.	BY:	DATE:	S4-16
1			3			TOTAL SHEETS
2			4			38

STD. NO. PCG10 (SHT 2)

ASSEMBLED BY : D. HODGE	DATE : 11/18		
CHECKED BY : G.M. GILLAND	DATE : 11/18		
DRAWN BY : TLA 6/05	REV. 5/1/06	RRR	KMM/GM
CHECKED BY : VC 6/05	REV. 10/1/11		MAA/GM
	REV. 12/17		MAA/THC

DOCUMENT NOT CONSIDERED FINAL UNLESS ALL SIGNATURES COMPLETED

P:\2018\18127.02 R-2582A\Structures\Revision (Site 2\Site 2\DGN\RIGHT LANE\R2582A_SMU_ PCG_650129rev.dgn
2/1/2019 8:00:03 AM

DocuSign Envelope ID: 817B1D73-88BA-49A0-9F22-45781A03197E

DEAD LOAD DEFLECTION TABLE FOR GIRDERS

0.6"Ø LOW RELAXATION	SPAN A GIRDERS #1 & #5										
TENTH POINTS	0	.1	.2	.3	.4	.5	.6	.7	.8	.9	0
CAMBER (GIRDER ALONE IN PLACE) ↑	0.000	0.057	0.109	0.149	0.174	0.183	0.174	0.149	0.109	0.057	0.000
✳ DEFLECTION DUE TO SUPERIMPOSED D.L. ↓	0.000	0.046	0.090	0.125	0.147	0.154	0.147	0.125	0.090	0.046	0.000
FINAL CAMBER ↑	0	1/8"	1/4"	5/16"	5/16"	3/8"	5/16"	5/16"	1/4"	1/8"	0

✳ INCLUDES FUTURE WEARING SURFACE
ALL VALUES ARE SHOWN IN FEET (DECIMAL FORM), EXCEPT "FINAL CAMBER", WHICH IS GIVEN IN INCHES (FRACTION FORM).

DEAD LOAD DEFLECTION TABLE FOR GIRDERS

0.6"Ø LOW RELAXATION	SPAN A GIRDERS #2, #3 & #4										
TENTH POINTS	0	.1	.2	.3	.4	.5	.6	.7	.8	.9	0
CAMBER (GIRDER ALONE IN PLACE) ↑	0.000	0.057	0.109	0.149	0.174	0.183	0.174	0.149	0.109	0.057	0.000
✳ DEFLECTION DUE TO SUPERIMPOSED D.L. ↓	0.000	0.049	0.097	0.134	0.158	0.166	0.158	0.134	0.097	0.049	0.000
FINAL CAMBER ↑	0	1/8"	1/8"	3/16"	3/16"	3/16"	3/16"	3/16"	1/8"	1/8"	0

✳ INCLUDES FUTURE WEARING SURFACE
ALL VALUES ARE SHOWN IN FEET (DECIMAL FORM), EXCEPT "FINAL CAMBER", WHICH IS GIVEN IN INCHES (FRACTION FORM).

DEAD LOAD DEFLECTION TABLE FOR GIRDERS

0.6"Ø LOW RELAXATION	SPAN B GIRDERS #1 & #5										
TENTH POINTS	0	.1	.2	.3	.4	.5	.6	.7	.8	.9	0
CAMBER (GIRDER ALONE IN PLACE) ↑	0.000	0.050	0.095	0.130	0.153	0.160	0.153	0.130	0.095	0.050	0.000
✳ DEFLECTION DUE TO SUPERIMPOSED D.L. ↓	0.000	0.032	0.064	0.088	0.104	0.109	0.104	0.088	0.064	0.032	0.000
FINAL CAMBER ↑	0	1/4"	3/8"	1/2"	9/16"	5/8"	9/16"	1/2"	3/8"	1/4"	0

✳ INCLUDES FUTURE WEARING SURFACE
ALL VALUES ARE SHOWN IN FEET (DECIMAL FORM), EXCEPT "FINAL CAMBER", WHICH IS GIVEN IN INCHES (FRACTION FORM).

DEAD LOAD DEFLECTION TABLE FOR GIRDERS

0.6"Ø LOW RELAXATION	SPAN B GIRDERS #2, #3 & #4										
TENTH POINTS	0	.1	.2	.3	.4	.5	.6	.7	.8	.9	0
CAMBER (GIRDER ALONE IN PLACE) ↑	0.000	0.050	0.095	0.130	0.153	0.160	0.153	0.130	0.095	0.050	0.000
✳ DEFLECTION DUE TO SUPERIMPOSED D.L. ↓	0.000	0.035	0.070	0.097	0.114	0.120	0.114	0.097	0.070	0.035	0.000
FINAL CAMBER ↑	0	3/16"	5/16"	3/8"	7/16"	1/2"	7/16"	3/8"	5/16"	3/16"	0

✳ INCLUDES FUTURE WEARING SURFACE
ALL VALUES ARE SHOWN IN FEET (DECIMAL FORM), EXCEPT "FINAL CAMBER", WHICH IS GIVEN IN INCHES (FRACTION FORM).

DEAD LOAD DEFLECTION TABLE FOR GIRDERS

0.6"Ø LOW RELAXATION	SPAN C GIRDERS #1 & #5										
TENTH POINTS	0	.1	.2	.3	.4	.5	.6	.7	.8	.9	0
CAMBER (GIRDER ALONE IN PLACE) ↑	0.000	0.034	0.064	0.088	0.103	0.108	0.103	0.088	0.064	0.034	0.000
✳ DEFLECTION DUE TO SUPERIMPOSED D.L. ↓	0.000	0.018	0.036	0.049	0.058	0.062	0.058	0.049	0.036	0.018	0.000
FINAL CAMBER ↑	0	3/16"	5/16"	7/16"	9/16"	9/16"	9/16"	7/16"	5/16"	3/16"	0

✳ INCLUDES FUTURE WEARING SURFACE
ALL VALUES ARE SHOWN IN FEET (DECIMAL FORM), EXCEPT "FINAL CAMBER", WHICH IS GIVEN IN INCHES (FRACTION FORM).

DEAD LOAD DEFLECTION TABLE FOR GIRDERS

0.6"Ø LOW RELAXATION	SPAN C GIRDERS #2, #3 & #4										
TENTH POINTS	0	.1	.2	.3	.4	.5	.6	.7	.8	.9	0
CAMBER (GIRDER ALONE IN PLACE) ↑	0.000	0.034	0.064	0.088	0.103	0.108	0.103	0.088	0.064	0.034	0.000
✳ DEFLECTION DUE TO SUPERIMPOSED D.L. ↓	0.000	0.019	0.038	0.053	0.063	0.066	0.063	0.053	0.038	0.019	0.000
FINAL CAMBER ↑	0	3/16"	5/16"	7/16"	1/2"	1/2"	1/2"	7/16"	5/16"	3/16"	0

✳ INCLUDES FUTURE WEARING SURFACE
ALL VALUES ARE SHOWN IN FEET (DECIMAL FORM), EXCEPT "FINAL CAMBER", WHICH IS GIVEN IN INCHES (FRACTION FORM).

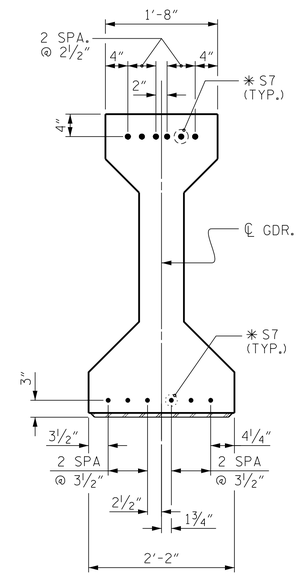

DETAIL "A"
(FOR AASHTO TYPE IV GIRDERS)

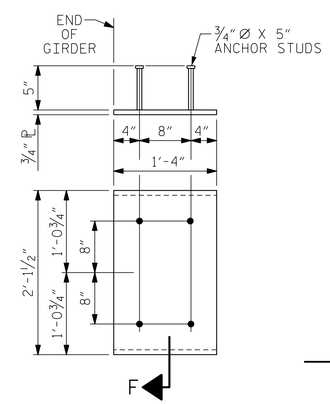

EMBEDDED PLATE "B-1" DETAILS FOR AASHTO TYPE IV GIRDER
(2 REQ'D PER GIRDER)

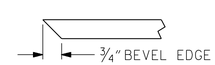

SECTION "F"
(SEE NOTES)

NOTES

ALL PRESTRESSING STRANDS SHALL BE 7-WIRE LOW-RELAXATION GRADE 270 STRANDS AND SHALL CONFORM TO AASHTO M203 EXCEPT FOR SAMPLING REQUIREMENTS WHICH SHALL BE IN ACCORDANCE WITH THE STANDARD SPECIFICATIONS.

ALL REINFORCING STEEL SHALL BE GRADE 60.

EMBEDDED PLATE "B-1" SHALL BE GALVANIZED IN ACCORDANCE WITH THE STANDARD SPECIFICATIONS.

ANCHOR STUDS SHALL CONFORM TO AASHTO M169 GRADES 1010 THROUGH 1020 OR APPROVED EQUAL, AND SHALL MEET THE TYPE "B" REQUIREMENTS OF SUBSECTION 7.3 OF THE ANSI/AASHTO/AWS D1.5 BRIDGE WELDING CODE.

AT ENDS OF GIRDERS TO BE EMBEDDED IN CONCRETE DIAPHRAGMS OR END WALLS, PRESTRESSING STRANDS MAY EXTEND A MAXIMUM OF 2" BEYOND THE GIRDER ENDS. OTHERWISE, PRESTRESSING STRANDS SHALL BE CUT FLUSH WITH THE GIRDER ENDS.

THE TRANSFER OF LOAD FROM THE ANCHORAGES TO THE GIRDER SHALL BE DONE WHEN CONCRETE HAS REACHED A COMPRESSIVE STRENGTH OF NOT LESS THAN 7,000 PSI FOR SPAN A, 5,500 PSI FOR SPAN B AND 4,000 PSI FOR SPAN C.

DEPENDING ON THE TYPE OF SYSTEM USED TO SUPPORT THE DECK SLAB FORMS, PRESET ANCHORS MAY BE NECESSARY IN THE PRESTRESSED CONCRETE GIRDER.

THE TOP SURFACE OF THE GIRDER, EXCLUDING THE OUTSIDE 4", SHALL BE RAKED TO A DEPTH OF 1/4".

THE CONTRACTOR HAS THE OPTION TO PROVIDE, AT NO ADDITIONAL COST TO THE DEPARTMENT, 2 ADDITIONAL STRANDS AT THE TOP OF THE GIRDER TO FACILITATE TYING OF THE REINFORCING STEEL. THESE STRANDS SHALL BE PULLED TO A LOAD OF 4500 lbs.

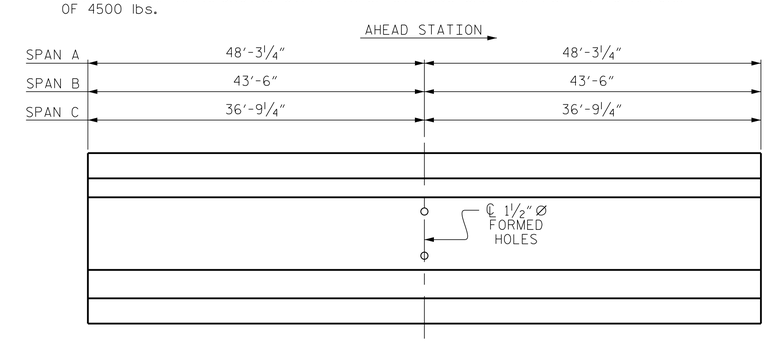

LOCATION OF BOLT HOLES IN GIRDERS

PROJECT NO. R-2582A
NORTHAMPTON COUNTY
STATION: 192+85.76 -L-

SHEET 5 OF 5

ENGINEER OF RECORD:
NORTH CAROLINA PROFESSIONAL SEAL 37400 ENGINEER
A996A9D0E52A8B...
2/1/2019
WETHERILL ENGINEERING
1223 Jones Franklin Rd.
Raleigh, N.C. 27606
Bus: 919 851 8077
Fax: 919 851 8107
LICENSE NO. F-0377

STATE OF NORTH CAROLINA
DEPARTMENT OF TRANSPORTATION
RALEIGH

STANDARD
PRESTRESSED CONCRETE GIRDER CONTINUOUS FOR LIVE LOAD DETAILS
(RIGHT LANE)

REVISIONS						SHEET NO.
NO.	BY:	DATE:	NO.	BY:	DATE:	S4-17
1			3			TOTAL SHEETS
2			4			38

DOCUMENT NOT CONSIDERED FINAL UNLESS ALL SIGNATURES COMPLETED

ASSEMBLED BY : D. HODGE		DATE :	11/18
CHECKED BY : G.M. GILLAND		DATE :	11/18
DRAWN BY : ELR 11/91	REV. 1/15		MAA/TMG
CHECKED BY : GRP 11/91	REV. 2/15		MAA/TMG
	REV. 12/17		MAA/THC

P:\2018\18127.02_R-2582A\Structures\Revision (Site 2)\Site 2\DGN\RIGHT LANE\R2582A_SMU_ PCG_650129revdgn
2/1/2019 8:00:29 AM

DocuSign Envelope ID: 817B1D73-88BA-49A0-9F22-45781A03197E

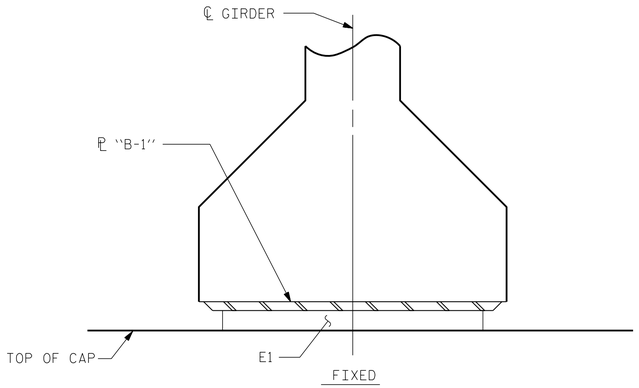

SECTION D-D

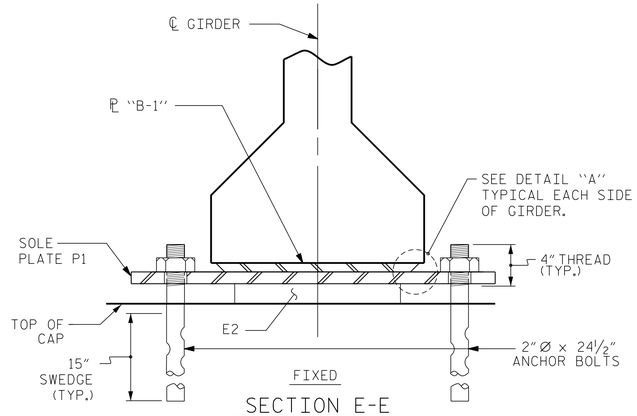

SECTION E-E

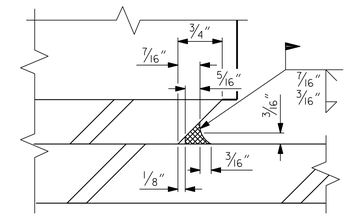

DETAIL "A"

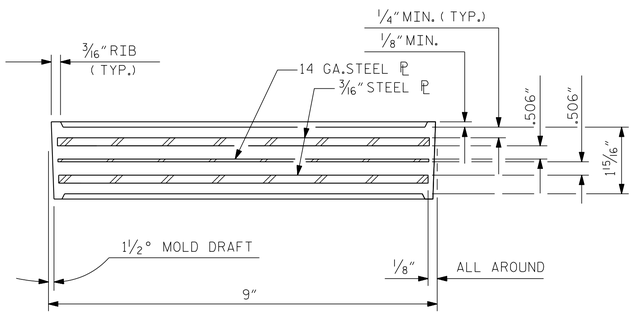

TYPICAL SECTION OF ELASTOMERIC BEARINGS

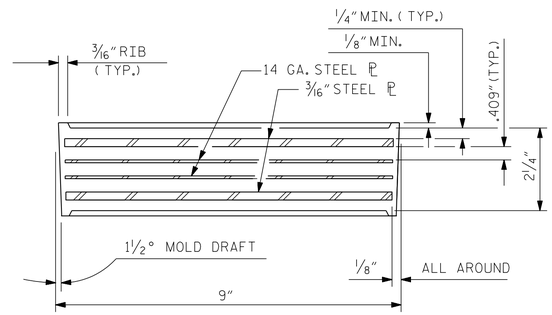

TYPICAL SECTION OF ELASTOMERIC BEARINGS

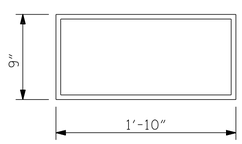

E1 (10 REQ'D)

PLAN VIEW OF ELASTOMERIC BEARING

TYPE IV

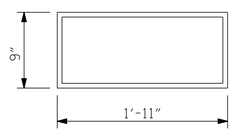

E2 (20 REQ'D)

PLAN VIEW OF ELASTOMERIC BEARING

TYPE V

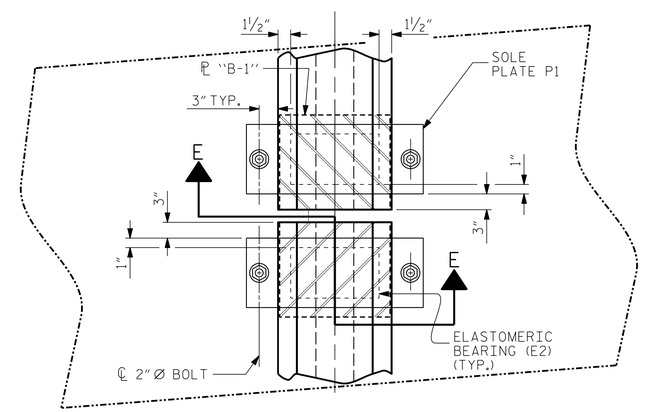

TYPICAL PLAN

(SHOWING CONTINUOUS BENT)

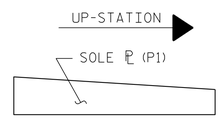

SOLE ℗ PLACEMENT DETAIL

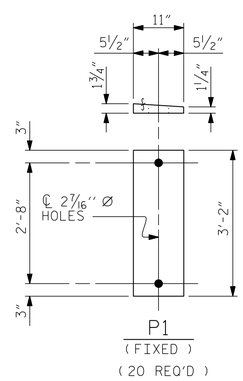

SOLE PLATE DETAILS (P1)

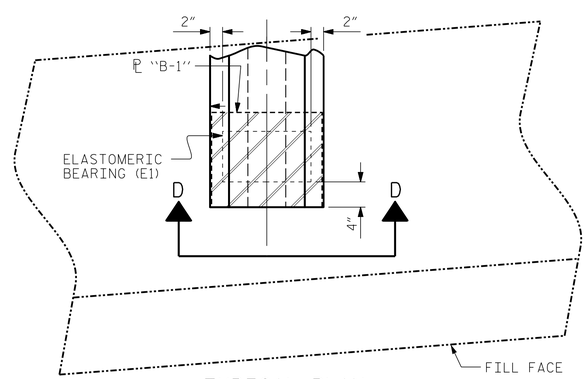

TYPICAL PLAN

(SHOWING END BENT)

NOTES

AT ALL FIXED POINTS OF SUPPORT, NUTS FOR ANCHOR BOLTS ARE TO BE TIGHTENED FINGER TIGHT AND THEN BACKED OFF ½ TURN. THE THREAD OF THE NUT AND BOLT SHALL THEN BE BURRED WITH A SHARP POINTED TOOL.

STEEL SOLE PLATES, ANCHOR BOLTS, NUTS, AND WASHERS SHALL BE GALVANIZED IN ACCORDANCE WITH THE STANDARD SPECIFICATIONS.

PRIOR TO WELDING, GRIND THE GALVANIZED SURFACE OF THE PORTION OF THE EMBEDDED PLATE AND SOLE PLATE THAT ARE TO BE WELDED. AFTER WELDING, DAMAGED GALVANIZED SURFACES SHALL BE REPAIRED IN ACCORDANCE WITH THE STANDARD SPECIFICATIONS.

WHEN WELDING THE SOLE PLATE TO THE EMBEDDED PLATE IN THE GIRDER, USE TEMPERATURE INDICATING WAX PENS, OR OTHER SUITABLE MEANS, TO ENSURE THAT THE TEMPERATURE OF THE SOLE PLATE DOES NOT EXCEED 300°F. TEMPERATURES ABOVE THIS MAY DAMAGE THE ELASTOMER.

SOLE PLATE "P", BOLTS, NUTS, WASHERS, AND PIPE SLEEVE SHALL BE INCLUDED IN THE PAY ITEM FOR PRESTRESSED CONCRETE GIRDERS.

ANCHOR BOLTS SHALL MEET THE REQUIREMENTS OF ASTM A449. NUTS SHALL MEET THE REQUIREMENTS OF AASHTO M291-DH OR AASHTO M292-2H. WASHERS SHALL MEET THE REQUIREMENTS OF AASHTO M293. SHOP DRAWINGS ARE NOT REQUIRED FOR ANCHOR BOLT, NUTS AND WASHERS. SHOP INSPECTION IS REQUIRED.

ALL SURFACES OF BEARING PLATES SHALL BE SMOOTH AND STRAIGHT.

THE ELASTOMER IN THE STEEL REINFORCED BEARINGS SHALL HAVE A SHEAR MODULUS OF 0.160 KSI, IN ACCORDANCE WITH AASHTO M251.

FOR STEEL REINFORCED ELASTOMERIC BEARINGS, SEE SPECIAL PROVISIONS.

ALL SOLE PLATES SHALL BE AASHTO M270 GRADE 36.

MAXIMUM ALLOWABLE SERVICE LOADS	
D.L.+L.L. (NO IMPACT)	
TYPE IV	225 k
TYPE V	365 k

PROJECT NO. R-2582A

NORTHAMPTON COUNTY

STATION: 192+85.76 -L-

ENGINEER OF RECORD:

NORTH CAROLINA PROFESSIONAL SEAL 37400 ENGINEER G.M. GILLAND

A096A06C-2E3A-4A0A-A7A1-A7A1A7A1A7A1

2/1/2019

ETHERILL ENGINEERING

1223 Jones Franklin Rd.
Raleigh, N.C. 27606
Bus: 919 851 8077
Fax: 919 851 8107
LICENSE NO. F-0377

STATE OF NORTH CAROLINA
DEPARTMENT OF TRANSPORTATION
RALEIGH

STANDARD
ELASTOMERIC BEARING DETAILS
PRESTRESSED CONCRETE GIRDER SUPERSTRUCTURE (RIGHT LANE)

REVISIONS							SHEET NO.
NO.	BY:	DATE:	NO.	BY:	DATE:		S4-18
1			3				TOTAL SHEETS
2			4				38

DRAWN BY : D. HODGE DATE : 11/18

CHECKED BY : G.M. GILLAND DATE : 11/18

DOCUMENT NOT CONSIDERED FINAL UNLESS ALL SIGNATURES COMPLETED

P:\2018\18127.02 R-2582A\Structures\Revision (Site 2)\Site 2\DGN\RIGHT LANE\R2582A_SMU_ BG_650129rev.dgn
2/1/2019 8:01:28 AM

DocuSign Envelope ID: 817B1D73-88BA-49A0-9F22-45781A03197E

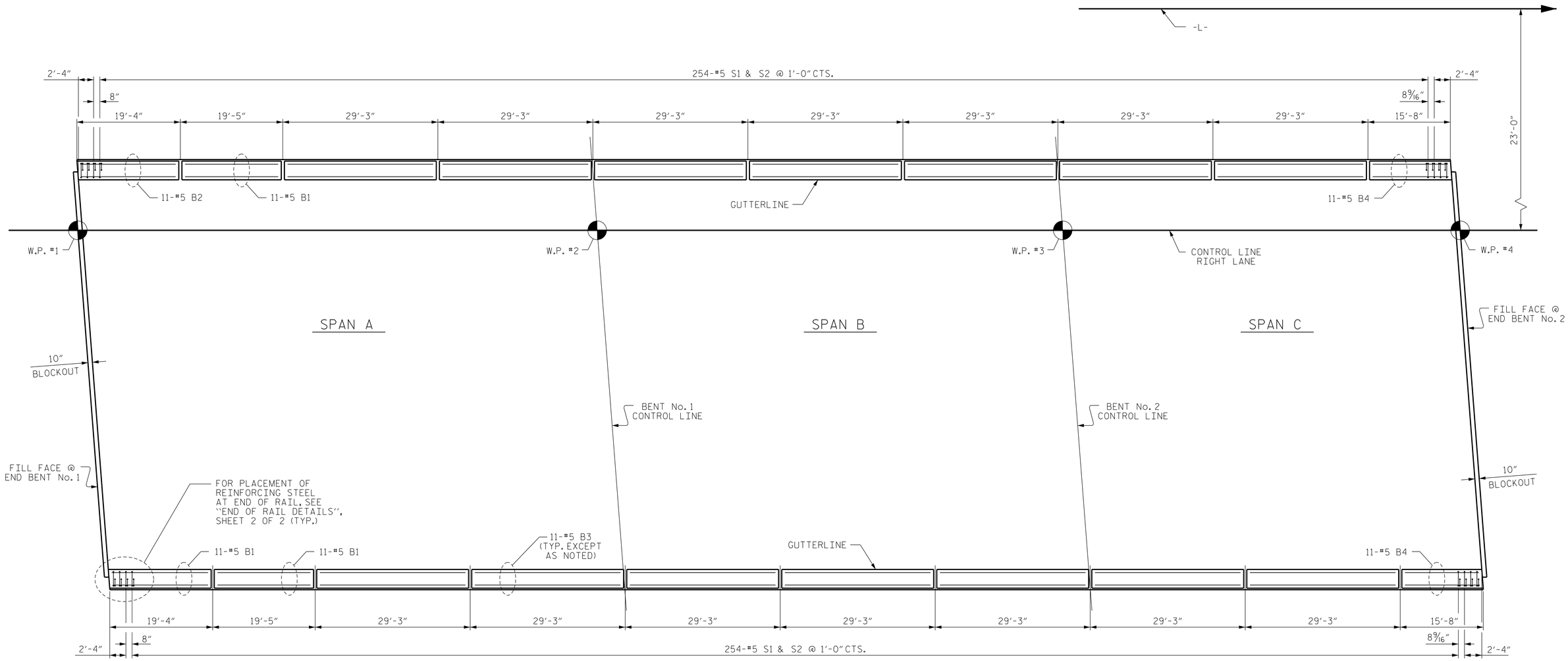

PLAN OF CONCRETE BARRIER RAIL

PROJECT NO. R-2582A
NORTHAMPTON COUNTY
STATION: 192+85.76 -L-

SHEET 1 OF 2

ENGINEER OF RECORD:

NORTH CAROLINA PROFESSIONAL SEAL 37400 ENGINEER

G.M. GILLAND

A99AA9C6E5...

2/1/2019

WETHERILL ENGINEERING

1223 Jones Franklin Rd.
Raleigh, N.C. 27606
Bus: 919 851 8077
Fax: 919 851 8107
LICENSE NO. F-0377

STATE OF NORTH CAROLINA
DEPARTMENT OF TRANSPORTATION
RALEIGH

CONCRETE
BARRIER RAIL
(RIGHT LANE)

REVISIONS						SHEET NO.
NO.	BY:	DATE:	NO.	BY:	DATE:	S4-19
1			3			TOTAL SHEETS
2			4			38

DRAWN BY : D. HODGE DATE : 10/18
CHECKED BY : G.M. GILLAND DATE : 11/18

DOCUMENT NOT CONSIDERED FINAL
UNLESS ALL SIGNATURES COMPLETED

P:\2018\18127.02 R-2582A\Structures\Revision (Site 2)\Site 2\DGN\RIGHT LANE\R2582A_SMU_ BR_650129rev.dgn
2/1/2019 8:02:11 AM

DocuSign Envelope ID: 817B1D73-88BA-49A0-9F22-45781A03197E

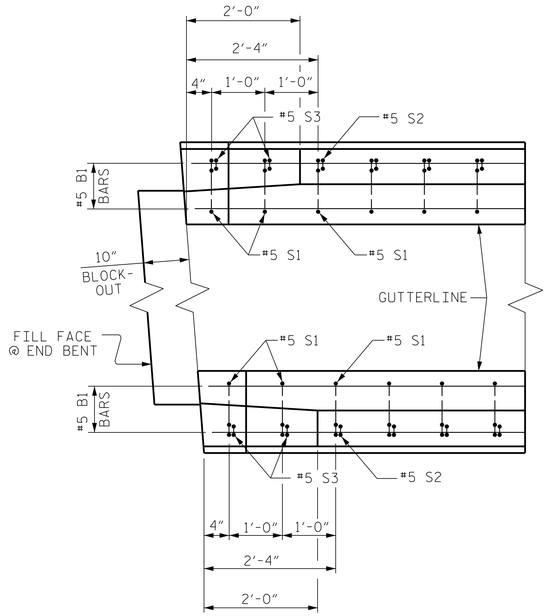

PLAN

NOTES

THE BARRIER RAIL SHALL NOT BE CAST UNTIL ALL SLAB CONCRETE HAS REACHED A MINIMUM COMPRESSIVE STRENGTH OF 3,000 PSI.

ALL REINFORCING STEEL IN BARRIER RAILS SHALL BE EPOXY COATED.

GROOVED CONTRACTION JOINTS, 1/2" IN DEPTH, SHALL BE TOOLED IN ALL EXPOSED FACES OF THE BARRIER RAIL AND IN ACCORDANCE WITH ARTICLE 825-10(B) OF THE STANDARD SPECIFICATIONS. THE CONTRACTION JOINT SHALL BE LOCATED AT EACH THIRD POINT BETWEEN BARRIER RAIL EXPANSION JOINTS. ONLY ONE CONTRACTION JOINT IS REQUIRED AT MIDPOINT OF BARRIER RAIL SEGMENTS LESS THAN 20 FEET IN LENGTH AND NO CONTRACTION JOINTS ARE REQUIRED FOR THOSE SEGMENTS LESS THAN 10 FEET IN LENGTH.

THE #5 S1 & S2 BARS MAY BE SHIFTED SLIGHTLY IN ORDER TO MAINTAIN A 2" MINIMUM CLEARANCE TO THE 1/2" EXPANSION JOINT MATERIAL IN THE BARRIER RAIL.

BAR TYPES

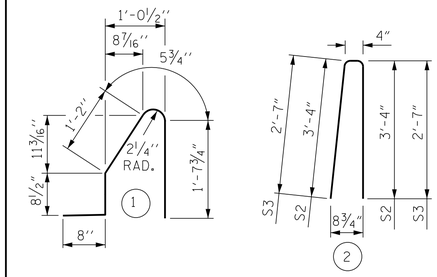

ALL BAR DIMENSIONS ARE OUT TO OUT

BILL OF MATERIAL

FOR CONCRETE BARRIER RAIL ONLY

BAR	NO.	SIZE	TYPE	LENGTH	WEIGHT
* S1	520	#5	1	4'-8"	2531
* S2	512	#5	2	7'-0"	3738
* S3	8	#5	2	5'-6"	46
* B1	33	#5	STR	19'-0"	654
* B2	11	#5	STR	18'-10"	216
* B3	154	#5	STR	28'-10"	4631
* B4	22	#5	STR	15'-2"	348

* EPOXY COATED REINFORCING STEEL	12,164 LBS.
CLASS AA CONCRETE	70.4 CU. YDS.
CONCRETE BARRIER RAIL	518.33 LIN. FT.

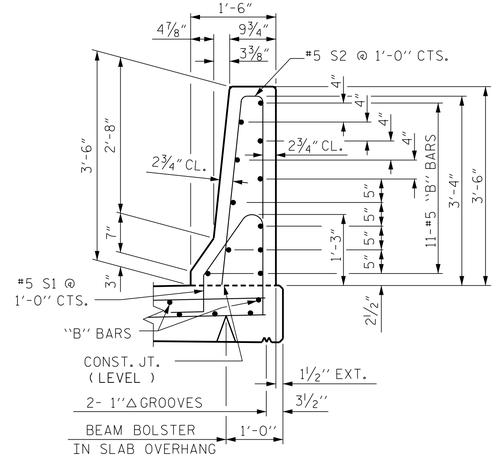

SECTION THRU RAIL

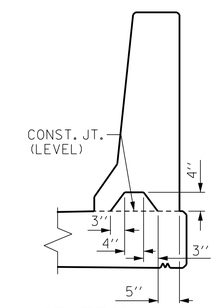

SECTION S-S

AT DAM IN OPEN JOINT (THIS IS TO BE USED ONLY WHEN SLIP FORM IS USED)

** VARIES, SEE "PLAN", SHEET 1 OF 2

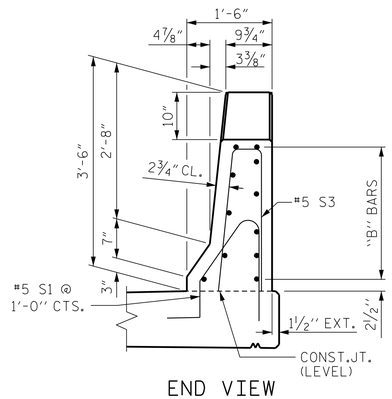

END VIEW

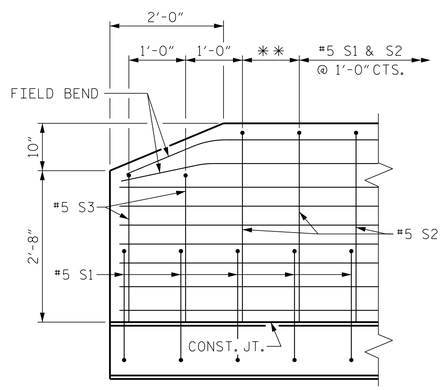

SIDE VIEW

END OF RAIL DETAILS

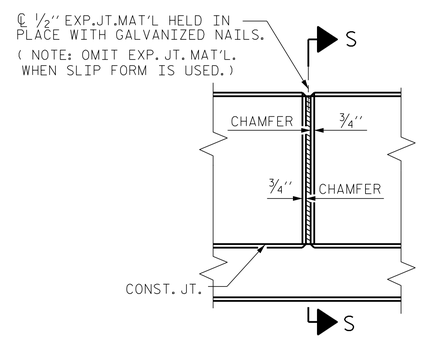

ELEVATION AT EXPANSION JOINTS

BARRIER RAIL DETAILS

PROJECT NO. R-2582A

NORTHAMPTON COUNTY

STATION: 192+85.76 -L-

SHEET 2 OF 2

ENGINEER OF RECORD:

NORTH CAROLINA PROFESSIONAL SEAL 37400 ENGINEER GREGORY M. GILLAND

DocuSigned by: Gregory M. Gilland 2/1/2019

WETHERILL ENGINEERING

1223 Jones Franklin Rd. Raleigh, N.C. 27606 Bus: 919 851 8077 Fax: 919 851 8107 LICENSE NO. F-0377

STATE OF NORTH CAROLINA
DEPARTMENT OF TRANSPORTATION
RALEIGH

STANDARD

CONCRETE BARRIER RAIL

(RIGHT LANE)

REVISIONS						SHEET NO.
NO.	BY:	DATE:	NO.	BY:	DATE:	S4-20
1			3			TOTAL SHEETS
2			4			38

DOCUMENT NOT CONSIDERED FINAL UNLESS ALL SIGNATURES COMPLETED

ASSEMBLED BY : D. HODGE		DATE : 10/18	
CHECKED BY : G.M. GILLAND		DATE : 11/18	
DRAWN BY : ARB 5/87	REV. 7/12	MAA/GM	
CHECKED BY : SJD 9/87	REV. 6/13	MAA/GM	
	REV. 12/17	MAA/THC	

P:\2018\181227.02 R-2582A\Structures\Revision (Site 2\Site 2\DGN\RIGHT LANE\R2582A_SMU_ BR_650129rev.dgn
2/1/2019 8:02:28 AM

STD. NO. CBR1 (SHT 3)

DocuSign Envelope ID: 817B1D73-88BA-49A0-9F22-45781A03197E

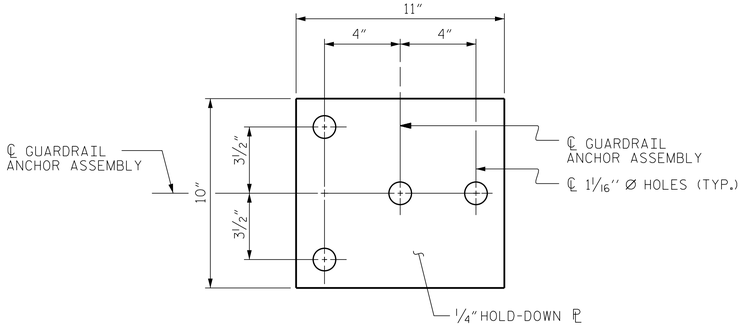

PLAN

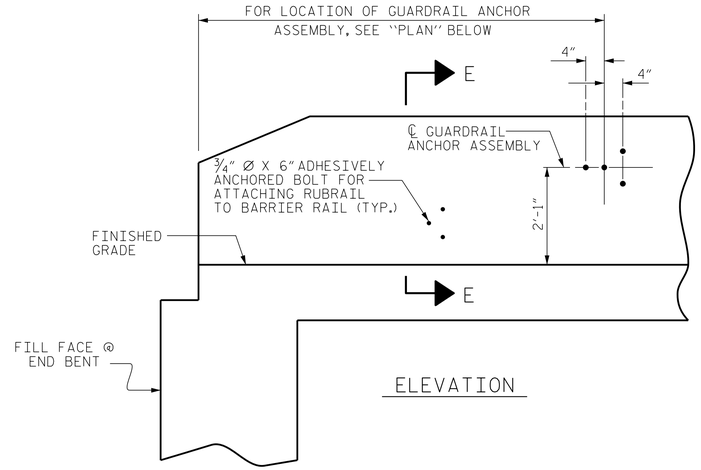

ELEVATION

NOTES

THE GUARDRAIL ANCHOR ASSEMBLY SHALL CONSIST OF A 1/4" HOLD-DOWN PLATE AND 4 - 7/8" Ø BOLTS WITH NUTS AND WASHERS, RUBRAIL, AND ADHESIVELY ANCHORED BOLTS.

THE HOLD-DOWN PLATE SHALL CONFORM TO AASHTO M270 GRADE 36. AFTER FABRICATION, THE HOLD-DOWN PLATE SHALL BE HOT-DIP GALVANIZED IN ACCORDANCE WITH AASHTO M111.

BOLTS SHALL CONFORM TO THE REQUIREMENTS OF ASTM A307 AND NUTS SHALL CONFORM TO THE REQUIREMENTS OF AASHTO M291. BOLTS, NUTS AND WASHERS SHALL BE GALVANIZED. (AT THE CONTRACTOR'S OPTION, STAINLESS STEEL BOLTS, NUTS AND WASHERS MAY BE USED AS AN ALTERNATE FOR THE 7/8" Ø GALVANIZED BOLTS, NUTS AND WASHERS. THEY SHALL CONFORM TO OR EXCEED THE MECHANICAL REQUIREMENTS OF ASTM A307. THE USE OF THIS ALTERNATE SHALL BE APPROVED BY THE ENGINEER.)

THE GUARDRAIL ANCHOR ASSEMBLY IS REQUIRED AT ALL POINTS WHERE APPROACH GUARDRAIL IS TO BE ATTACHED TO THE END OF BARRIER RAIL. FOR POINTS OF ATTACHMENT, SEE SKETCH.

AFTER INSTALLATION, THE EXPOSED THREAD OF THE BOLT SHALL BE BURRED WITH A SHARP POINTED TOOL.

THE COST OF THE GUARDRAIL ANCHOR ASSEMBLY SHALL BE INCLUDED IN THE UNIT CONTRACT PRICE BID FOR CONCRETE BARRIER RAIL.

THE 1 1/4" Ø HOLES SHALL BE FORMED OR DRILLED WITH A CORE BIT. IMPACT TOOLS WILL NOT BE PERMITTED. ANY CONCRETE DAMAGED BY THIS WORK SHALL BE REPAIRED TO THE SATISFACTION OF THE ENGINEER.

THE C6 X 8.2 RUBRAIL IS TO BE ADHESIVELY ANCHORED TO THE RAIL USING THREE 3/4" Ø X 6" BOLTS WITH WASHERS. LEVEL ONE FIELD TESTING IS REQUIRED, AND THE YIELD LOAD OF THE 3/4" Ø BOLT IS 12 KIPS. FOR ADHESIVELY ANCHORED ANCHOR BOLTS OR DOWELS, SEE STANDARD SPECIFICATIONS. SEE ROADWAY STANDARD 862.03 FOR DETAILS AND LOCATION OF THE RUBRAIL.

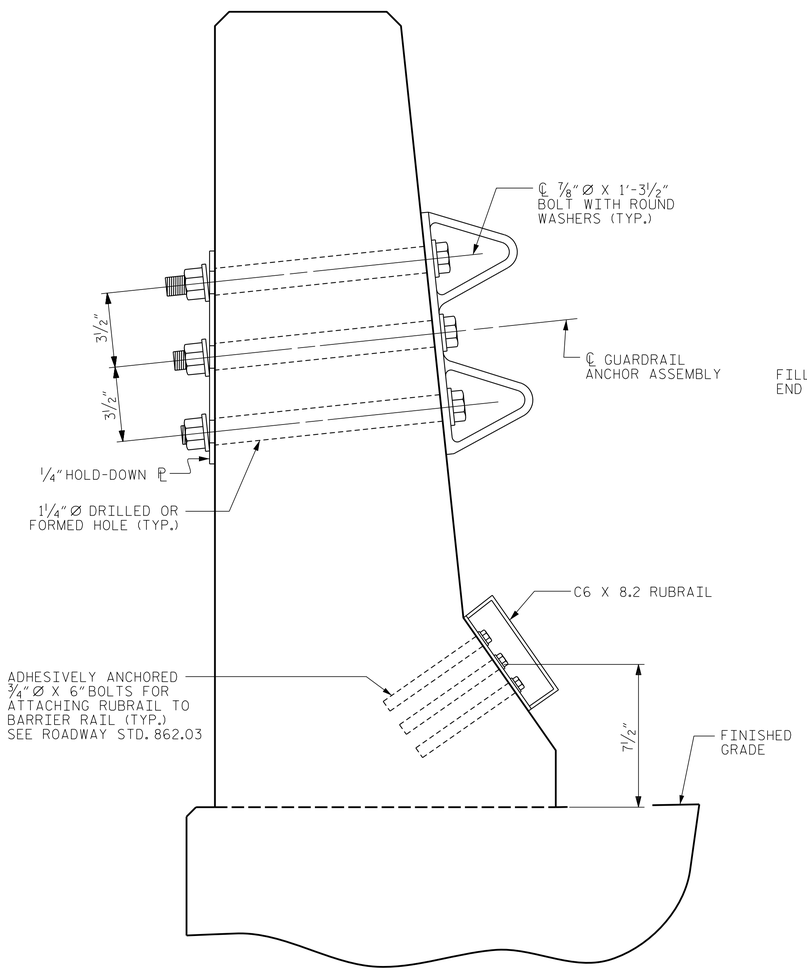

SECTION E-E

GUARDRAIL ANCHOR ASSEMBLY DETAILS

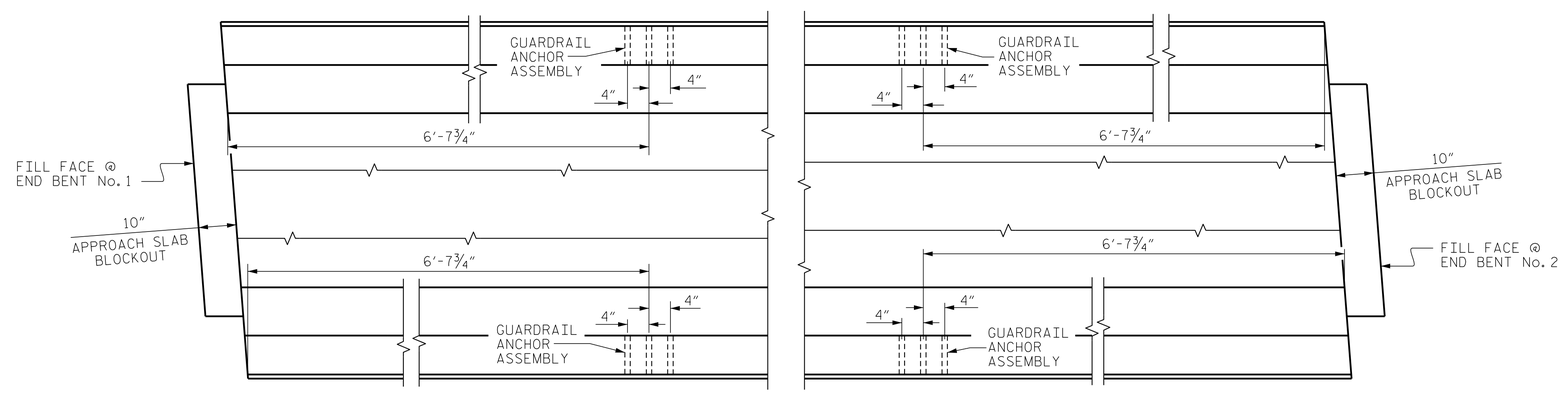

PLAN

LOCATION OF ANCHORS FOR GUARDRAIL

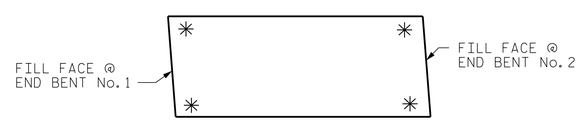

SKETCH SHOWING POINTS OF ATTACHMENTS

✳ DENOTES GUARDRAIL ANCHOR ASSEMBLY

PROJECT NO. R-2582A
NORTHAMPTON COUNTY
STATION: 192+85.76 -L-

ENGINEER OF RECORD:
NORTH CAROLINA PROFESSIONAL SEAL 37400 ENGINEER
A096A0B0A
2/1/2019

WETHERILL ENGINEERING
1223 Jones Franklin Rd.
Raleigh, N.C. 27606
Bus: 919 851 8077
Fax: 919 851 8107
LICENSE NO. F-0377

STATE OF NORTH CAROLINA
DEPARTMENT OF TRANSPORTATION
RALEIGH

GUARDRAIL ANCHORAGE FOR BARRIER RAIL (RIGHT LANE)

REVISIONS								SHEET NO.
NO.	BY:	DATE:	NO.	BY:	DATE:			S4-21
1			3					TOTAL SHEETS
2			4					38

DOCUMENT NOT CONSIDERED FINAL UNLESS ALL SIGNATURES COMPLETED

DRAWN BY : D. HODGE DATE : 11/18
CHECKED BY : G.M. GILLAND DATE : 11/18

P:\2018\18127.02 R-2582A\Structures\Revision (Site 2\Site 2\DGN\RIGHT LANE\R2582A_SMU_ GR_650129revdgn
2/1/2019 8:03:15 AM

DocuSign Envelope ID: 817B1D73-88BA-49A0-9F22-45781A03197E

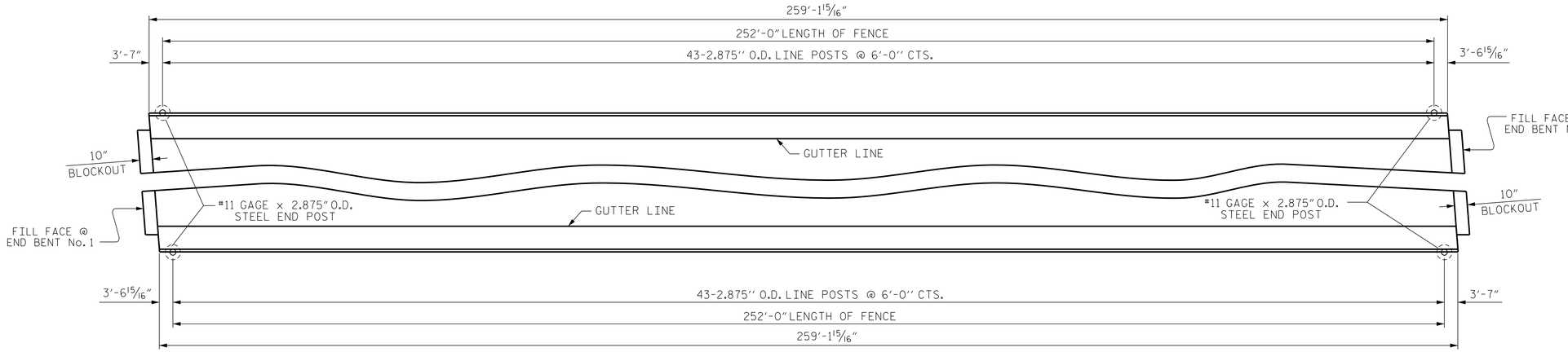

PLAN OF FENCE POST SPACING

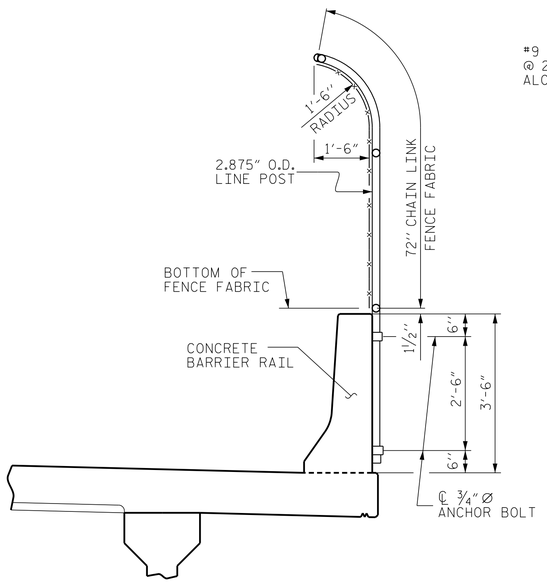

SECTION THRU FENCE

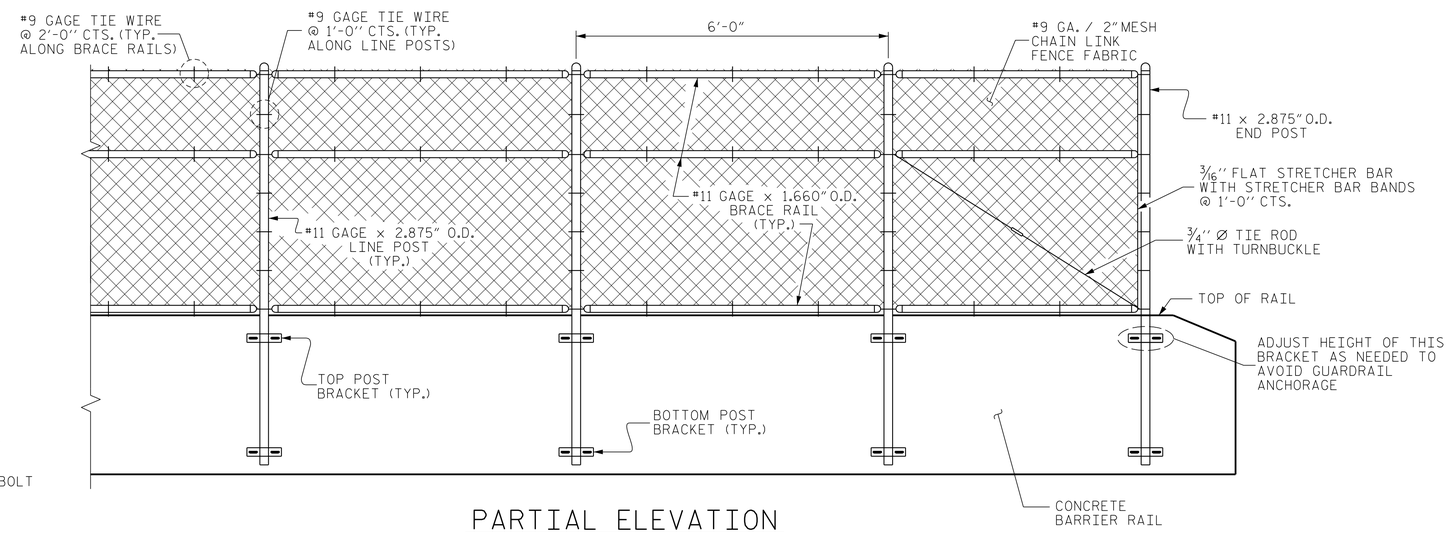

PARTIAL ELEVATION

NOTES

FOR BRIDGE MOUNTED CHAIN LINK FENCE, SEE SPECIAL PROVISIONS.

MATERIAL FOR ANCHOR BOLTS SHALL BE TYPE 304 STAINLESS STEEL WITH A MINIMUM 9000 PSI ULTIMATE STRENGTH. NUTS AND WASHERS SHALL BE TYPE 304 STAINLESS STEEL. ANCHOR BOLTS SHALL BE EMBEDDED AS PER ADHESIVE BONDING SYSTEM MANUFACTURER SPECIFICATIONS. NUTS SHALL BE AMERICAN STANDARD FINISHED HEXAGON THICK NUTS, CLASS 2B THREADS.

FOR SETTING ANCHOR BOLTS, THE CONTRACTOR SHALL USE AN ADHESIVE BONDING SYSTEM. LEVEL ONE FIELD TESTING OF BONDING SYSTEM IS REQUIRED.

ALL FENCE MATERIAL SHALL MEET THE REQUIREMENTS OF SECTION 1050 OF THE STANDARD SPECIFICATIONS. VINYL COAT ALL STEEL PARTS AND HARDWARE IN ACCORANCE WITH ARTICLE 1050 OF THE STANDARD SPECIFICATIONS.

ALL FENCE COMPONENTS SHALL BE VINYL COATED - BLACK.

FENCE POST LOCATIONS SHALL BE SHIFTED, AS NECESSARY, TO MAINTAIN A 6" MINIMUM DISTANCE FROM ANCHOR BOLT TO JOINTS IN BARRIER RAIL.

WELDING SHALL BE DONE IN ACCORDANCE WITH ARTICLE 1072-20 OF STANDARD SPECIFICATIONS.

ADHESIVE BONDING SYSTEM SHALL HAVE MINIMUM PULLOUT STRENGTH OF 10 KIPS. THE ADHESIVE BONDING SYSTEM SHALL BE CHOSEN FROM THOSE ON THE NCDOT APPROVED PRODUCTS LIST.

72" CHAIN LINK FENCE
TOTAL PAY LENGTH 504.0 LIN. FT.

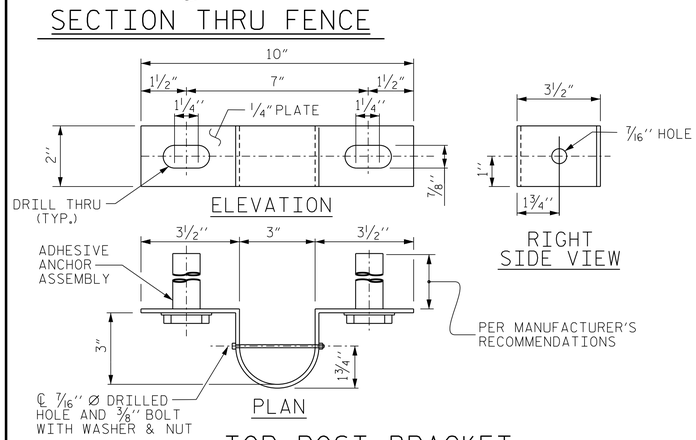

TOP POST BRACKET

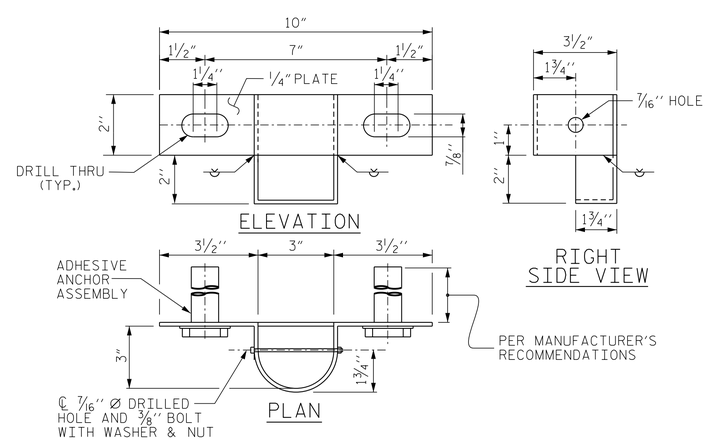

BOTTOM POST BRACKET

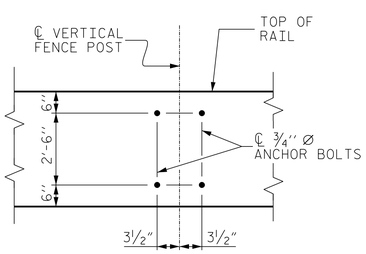

BOLT SETTING DETAIL

PROJECT NO. R-2582A
NORTHAMPTON COUNTY
STATION: 192+85.76 -L-

DRAWN BY : D. HODGE DATE : 11/18
CHECKED BY : G.M. GILLAND DATE : 11/18

DOCUMENT NOT CONSIDERED FINAL UNLESS ALL SIGNATURES COMPLETED

ENGINEER OF RECORD:
NORTH CAROLINA PROFESSIONAL SEAL 37400 ENGINEER GREGORY M. GILLAND
2/1/2019

WETHERILL ENGINEERING
1223 Jones Franklin Rd.
Raleigh, N.C. 27606
Bus: 919 851 8077
Fax: 919 851 8107
LICENSE NO. F-0377

STATE OF NORTH CAROLINA
DEPARTMENT OF TRANSPORTATION
RALEIGH

BRIDGE MOUNTED CHAIN LINK FENCE DETAILS
(RIGHT LANE)

REVISIONS						SHEET NO.
NO.	BY:	DATE:	NO.	BY:	DATE:	S4-22
1			3			TOTAL SHEETS
2			4			38

P:\2018\18127.02_R-2582A\Structures\Revision (Site 2)\Site 2\DGN\RIGHT LANE\R2582A_SMU_ CL_650129rev.dgn
2/1/2019 8:03:43 AM

DocuSign Envelope ID: 224528F0-0F95-4F76-A9C5-38258D5BEEA0

GROOVING BRIDGE FLOORS		
APPROACH SLABS	2,092	SQ.FT.
BRIDGE DECK	11,144	SQ.FT.
TOTAL	13,236	SQ.FT.

CLASS AA CONCRETE BREAKDOWN		
POUR #1	133.5	CY
POUR #2	160.2	CY
POUR #3	144.3	CY
POUR #4	75.0	CY
CLASS AA CONCRETE BREAKDOWN TOTAL	513.0	CY

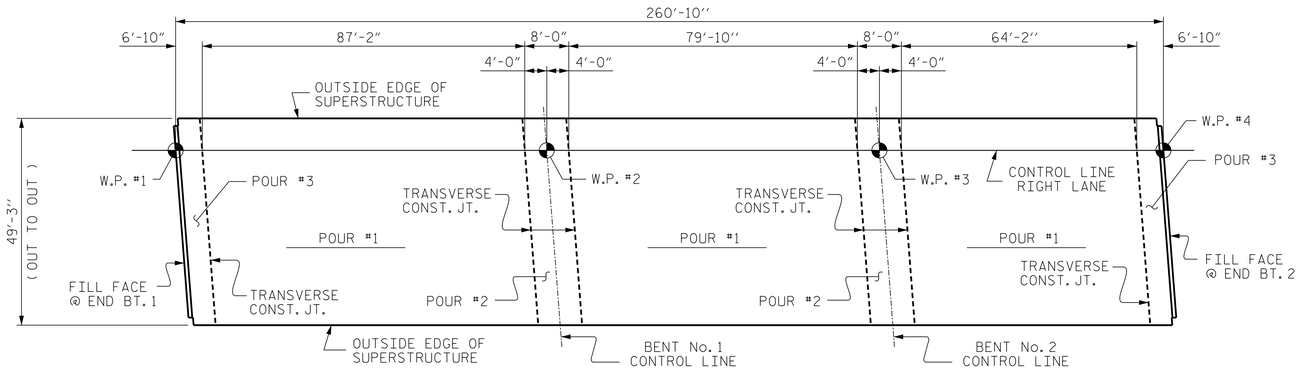

OPTIONAL POUR SEQUENCE SKETCH

NOTE :
POUR #3 INCLUDES UPPER PART OF THE INTEGRAL END BENT.

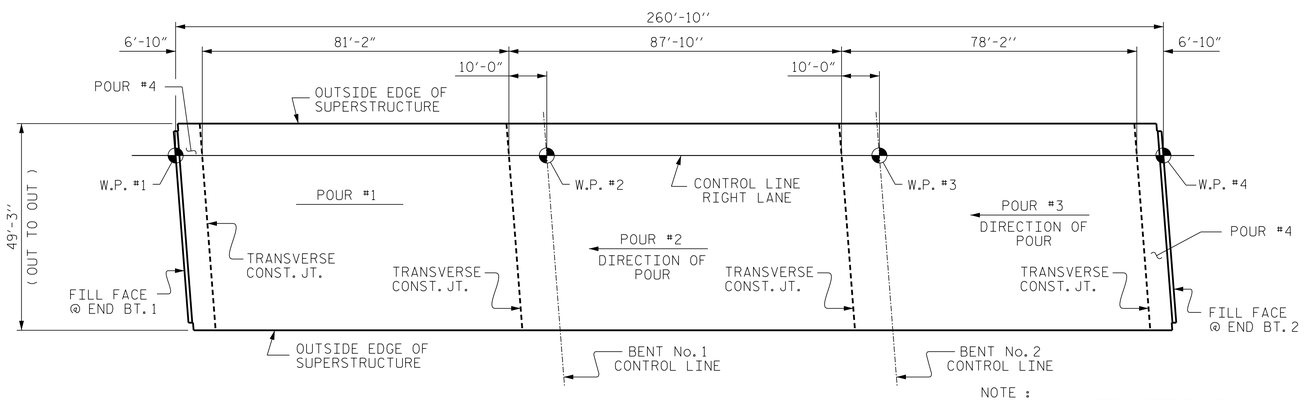

POUR SEQUENCE SKETCH

NOTE :
POUR #4 INCLUDES UPPER PART OF THE INTEGRAL END BENT.

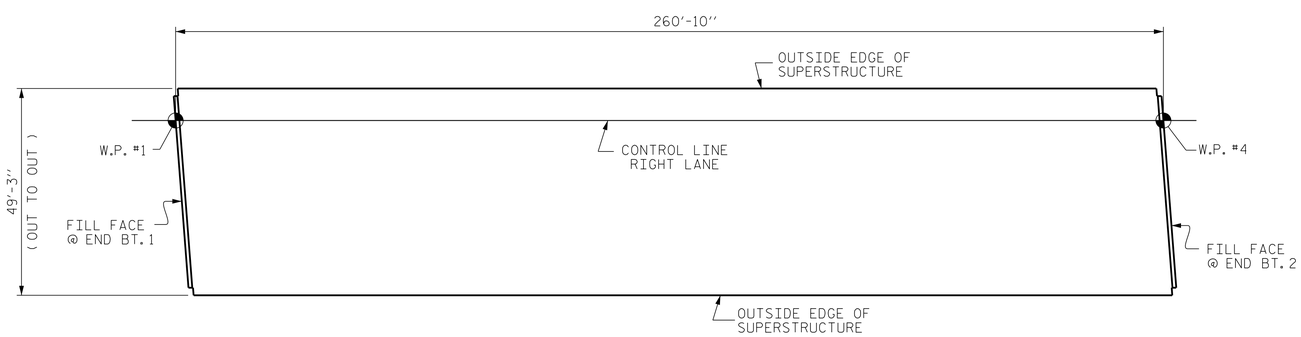

LAYOUT FOR COMPUTING AREA REINFORCED CONCRETE DECK SLAB
(SQ. FT. = 12,846)

DRAWN BY : D. HODGE DATE : 10/18
CHECKED BY : G.M. GILLAND DATE : 11/18

BAR TYPES

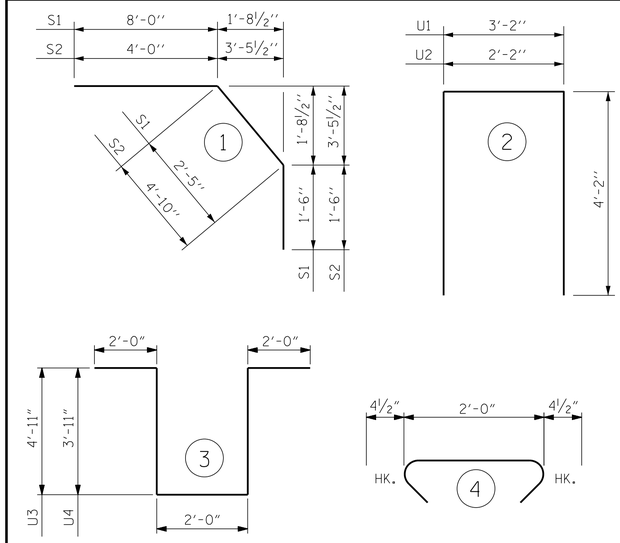

ALL BAR DIMENSIONS ARE OUT TO OUT

SUPERSTRUCTURE BILL OF MATERIAL

	CLASS AA CONCRETE	REINFORCING STEEL	✳ EPOXY COATED REINFORCING STEEL
	(CU. YDS.)	(LBS.)	(LBS.)
TOTALS ✳✳	513.0	49,338	48,831

✳✳ QUANTITIES FOR CONCRETE BARRIER RAIL ARE NOT INCLUDED

BILL OF MATERIAL

BAR	NO.	SIZE	TYPE	LENGTH	WEIGHT
✳ A1	557	#5	STR	48'-11"	28,418
A2	557	#5	STR	48'-11"	28,418
✳ A101	2	#5	STR	44'-6"	93
✳ A102	2	#5	STR	38'-6"	80
✳ A103	2	#5	STR	32'-7"	68
✳ A104	2	#5	STR	26'-7"	55
✳ A105	2	#5	STR	20'-7"	43
✳ A106	2	#5	STR	14'-8"	31
✳ A107	2	#5	STR	8'-8"	18
A201	2	#5	STR	44'-6"	93
A202	2	#5	STR	38'-6"	80
A203	2	#5	STR	32'-7"	68
A204	2	#5	STR	26'-7"	55
A205	2	#5	STR	20'-7"	43
A206	2	#5	STR	14'-8"	31
A207	2	#5	STR	8'-8"	18
✳ B1	20	#4	STR	27'-9"	371
✳ B2	94	#6	STR	20'-0"	2824
✳ B3	64	#4	STR	24'-4"	1040
✳ B4	64	#6	STR	34'-5"	3308
✳ B5	62	#6	STR	28'-0"	2607
✳ B6	32	#4	STR	29'-0"	620
✳ B7	32	#6	STR	58'-11"	2832
✳ B8	62	#6	STR	24'-6"	2282
✳ B9	64	#4	STR	18'-9"	802
✳ B10	94	#6	STR	15'-0"	2118
B11	310	#5	STR	53'-6"	17,298
K1	20	#4	STR	24'-6"	327
K2	48	#4	STR	8'-6"	273
K3	48	#4	STR	9'-6"	305
K4	8	#4	STR	8'-0"	43
K5	16	#4	STR	6'-10"	73
K6	8	#4	STR	2'-5"	13
K7	8	#4	STR	2'-10"	15
K8	4	#4	STR	2'-1"	6
K9	20	#4	STR	22'-2"	296
✳ S1	84	#4	1	11'-11"	669
✳ S2	80	#4	1	10'-4"	552
S3	272	#4	4	2'-9"	500
U1	80	#4	2	11'-6"	615
U2	4	#4	2	10'-6"	28
U3	56	#4	3	15'-10"	592
U4	16	#4	3	13'-10"	148
REINFORCING STEEL				LBS.	49,338
✳ EPOXY COATED REINFORCING STEEL				LBS.	48,831

✳ THESE BARS ARE EPOXY COATED.

SUPERSTRUCTURE REINFORCING STEEL LENGTHS ARE BASED ON THE FOLLOWING MINIMUM SPLICE LENGTHS

BAR SIZE	SUPERSTRUCTURE EXCEPT APPROACH SLABS, PARAPET, AND BARRIER RAIL		APPROACH SLABS		PARAPET AND BARRIER RAIL
	EPOXY COATED	UNCOATED	EPOXY COATED	UNCOATED	
#4	2'-0"	1'-9"	2'-0"	1'-9"	2'-9"
#5	2'-6"	2'-2"	2'-6"	2'-2"	3'-5"
#6	3'-0"	2'-7"	3'-10"	2'-7"	4'-4"
#7	5'-3"	3'-6"			
#8	6'-10"	4'-7"			

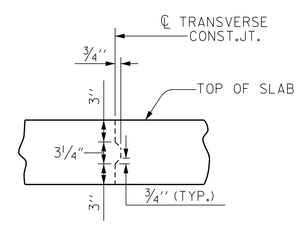

TRANSVERSE CONSTRUCTION JOINT DETAIL

NOTE: SLAB REINFORCING STEEL SHALL BE CONTINUOUS THRU JOINT

PROJECT NO. R-2582A
NORTHAMPTON COUNTY
STATION: 192+85.76 -L-

ENGINEER OF RECORD:
3/26/2019
NORTH CAROLINA PROFESSIONAL SEAL 37400 ENGINEER GREGORY M. GILLAND

DocuSigned by:
Gregory M. Gilland
A9B6A90E52D485...

WETHERILL ENGINEERING
1223 Jones Franklin Rd.
Raleigh, N.C. 27606
Bus: 919 851 8077
Fax: 919 851 8107
LICENSE NO. F-0377

DOCUMENT NOT CONSIDERED FINAL UNLESS ALL SIGNATURES COMPLETED

STATE OF NORTH CAROLINA
DEPARTMENT OF TRANSPORTATION
RALEIGH

SUPERSTRUCTURE
BILL OF MATERIAL
(RIGHT LANE)

REVISIONS							SHEET NO.
NO.	BY:	DATE:	NO.	BY:	DATE:		S4-23
1			3				TOTAL SHEETS
2			4				38

P:\2018\18127.02 R-2582A\Structures\Revision (Site 2\Site 2\DGN\RIGHT LANE\R2582A_SMU_ BM_650129rev.dgn
3/25/2019 8:18:54 AM

DocuSign Envelope ID: 224528F0-0F95-4F76-A9C5-38258D5BEEA0

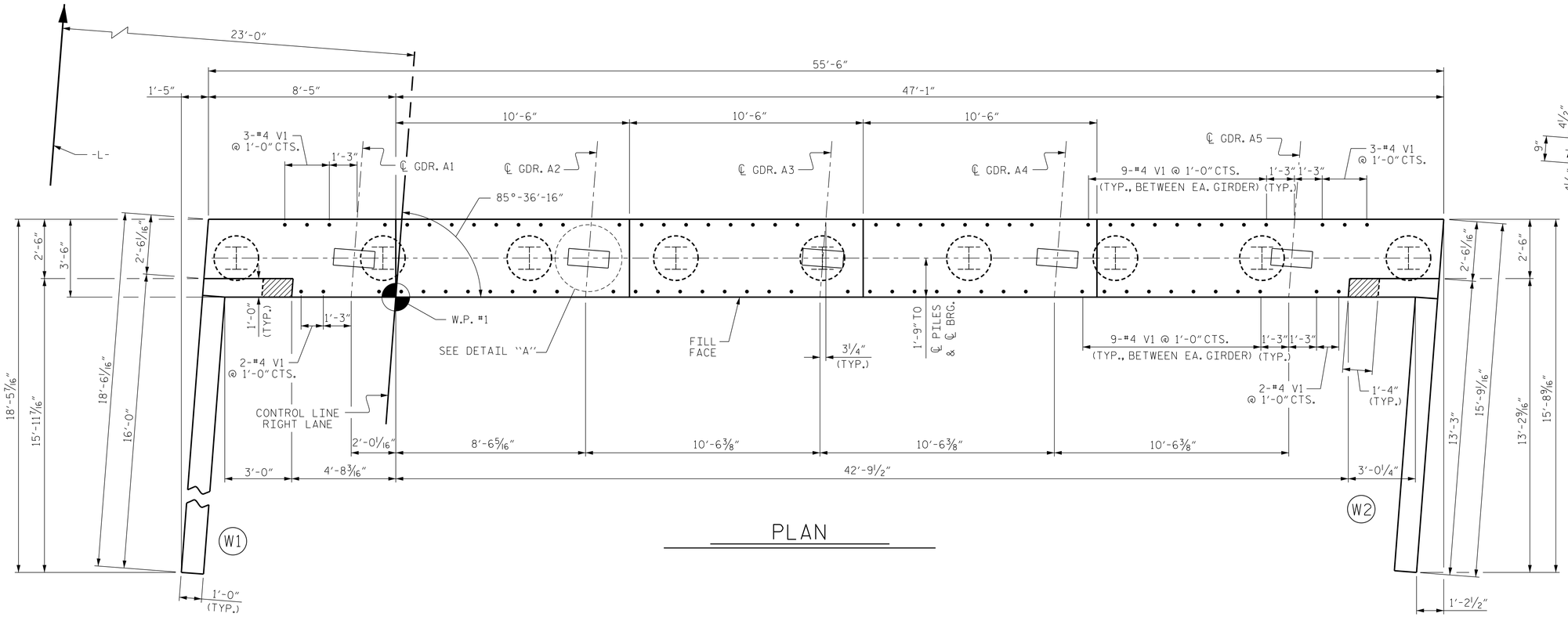

PLAN

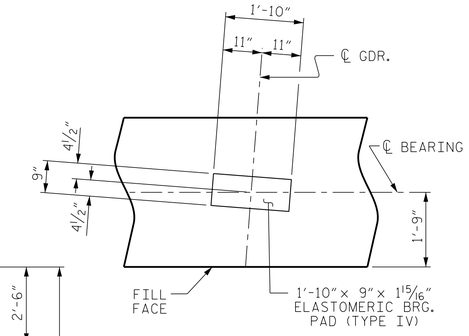

DETAIL "A"

(TYP. EACH GIRDER)

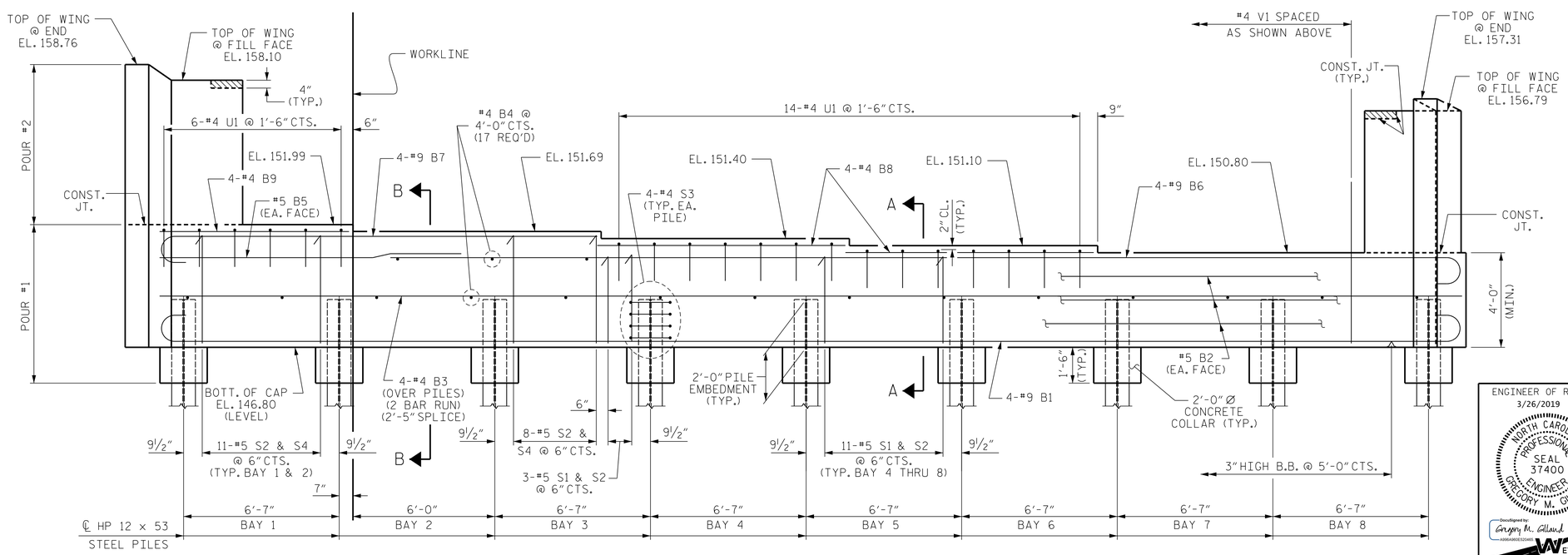

ELEVATION

FOR SECTION A-A & B-B, SEE SHEET 3 OF 3.

PROJECT NO. R-2582A

NORTHAMPTON COUNTY

STATION: 192+85.76 -L-

SHEET 1 OF 3

ENGINEER OF RECORD: 3/26/2019

NORTH CAROLINA PROFESSIONAL SEAL 37400 ENGINEER GREGORY M. GILLAND

DocuSigned by: Gregory M. Gilland

WETHERILL ENGINEERING

1223 Jones Franklin Rd.
Raleigh, N.C. 27606
Bus: 919 851 8077
Fax: 919 851 8107
LICENSE NO. F-0377

STATE OF NORTH CAROLINA
DEPARTMENT OF TRANSPORTATION
RALEIGH

SUBSTRUCTURE

END BENT No. 1

(RIGHT LANE)

REVISIONS						SHEET NO.
NO.	BY:	DATE:	NO.	BY:	DATE:	S4-24
1			3			TOTAL SHEETS
2			4			38

DRAWN BY : D. HODGE DATE : 11/18

CHECKED BY : G.M. GILLAND DATE : 11/18

DOCUMENT NOT CONSIDERED FINAL UNLESS ALL SIGNATURES COMPLETED

P:\2018\18127.02_R-2582A\Structures\Revision (Site 2)\Site 2\DGN\RIGHT LANE\R2582A_SMU_ EB_650129rev.dgn
3/25/2019 8:19:50 AM

DocuSign Envelope ID: 224528F0-0F95-4F76-A9C5-38258D5BEEA0

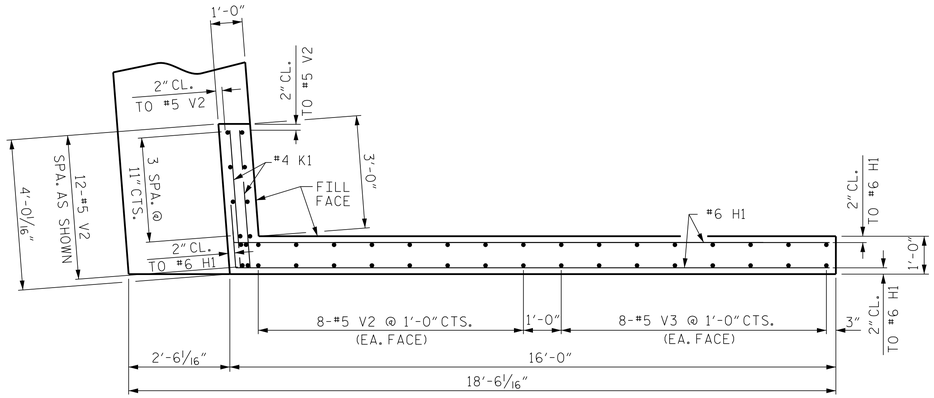

PLAN OF WING - (W1)

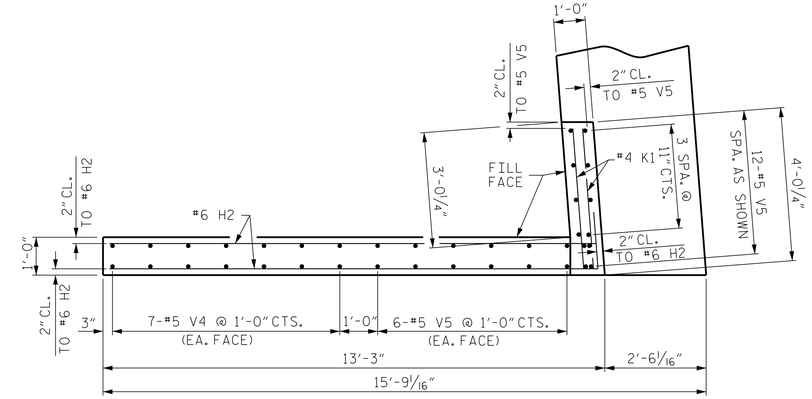

PLAN OF WING - (W2)

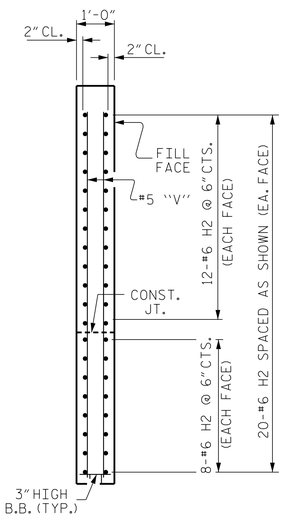

SECTION Y-Y

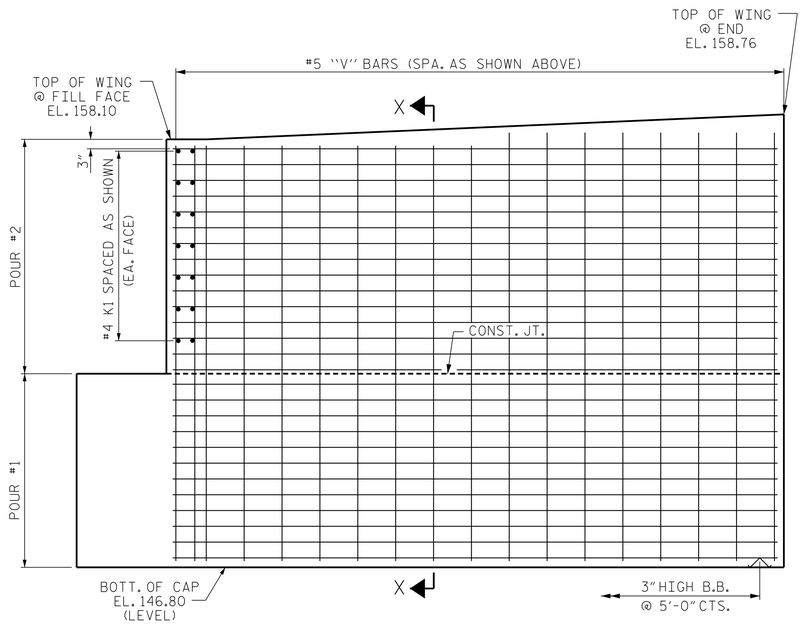

ELEVATION OF WING - (W1)

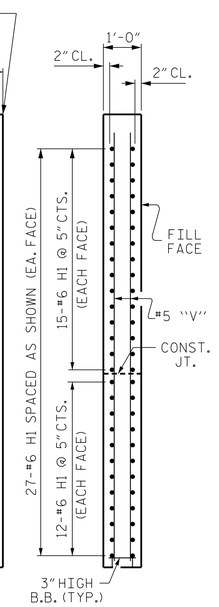

SECTION X-X

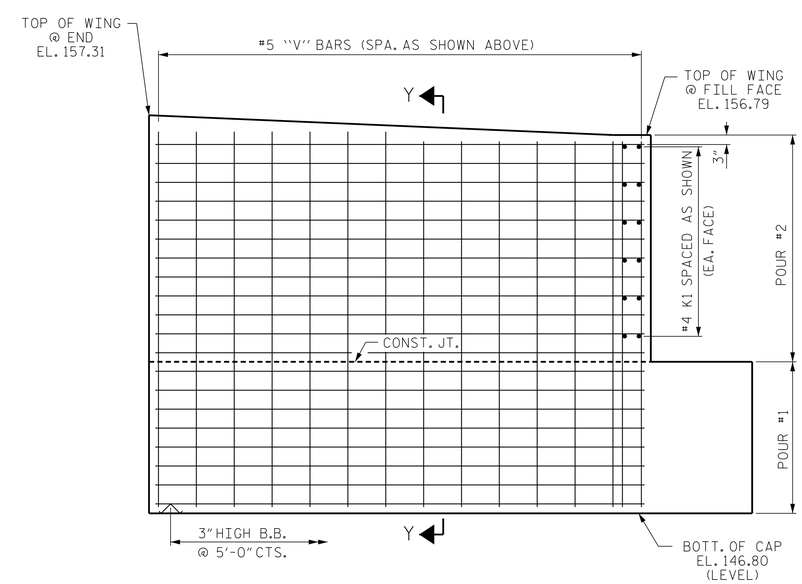

ELEVATION OF WING - (W2)

PROJECT NO. R-2582A

NORTHAMPTON COUNTY

STATION: 192+85.76 -L-

SHEET 2 OF 3

ENGINEER OF RECORD:
3/26/2019

NORTH CAROLINA PROFESSIONAL SEAL 37400 ENGINEER GREGORY M. GILLAND

Docusigned by: Gregory M. Gilland

WETHERILL ENGINEERING
1223 Jones Franklin Rd.
Raleigh, N.C. 27606
Bus: 919 851 8077
Fax: 919 851 8107
LICENSE NO. F-0377

STATE OF NORTH CAROLINA
DEPARTMENT OF TRANSPORTATION
RALEIGH

SUBSTRUCTURE
END BENT No. 1
(RIGHT LANE)

REVISIONS						SHEET NO.
NO.	BY:	DATE:	NO.	BY:	DATE:	S4-25
1			3			TOTAL SHEETS
2			4			38

DRAWN BY : D. HODGE DATE : 11/18
CHECKED BY : G.M. GILLAND DATE : 11/18

DOCUMENT NOT CONSIDERED FINAL UNLESS ALL SIGNATURES COMPLETED

P:\2018\18127.02 R-2582A\Structures\Revision \Site 2\Site 2\DGN\RIGHT LANE\R2582A_SMU_ EB_650129rev.dgn
3/25/2019 8:20:15 AM

DocuSign Envelope ID: 224528F0-0F95-4F76-A9C5-38258D5BEEA0

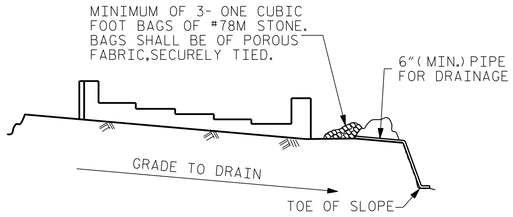

BAGGED STONE AND PIPE SHALL BE PLACED IMMEDIATELY AFTER COMPLETION OF END BENT EXCAVATION. PIPE MAY BE EITHER CONCRETE, CORRUGATED STEEL, CORRUGATED ALUMINUM ALLOY, OR CORRUGATED PLASTIC. PERFORATED PIPE WILL NOT BE ALLOWED.

BAGGED STONE SHALL REMAIN IN PLACE UNTIL THE ENGINEER DIRECTS THAT IT BE REMOVED. THE CONTRACTOR SHALL REMOVE AND DISPOSE OF SILT ACCUMULATIONS AT BAGGED STONE WHEN SO DIRECTED BY THE ENGINEER. BAGS SHALL BE REMOVED AND REPLACED WHENEVER THE ENGINEER DETERMINES THAT THEY HAVE DETERIORATED AND LOST THEIR EFFECTIVENESS.

NO SEPARATE PAYMENT WILL BE MADE FOR THIS WORK AND THE ENTIRE COST OF THIS WORK SHALL BE INCLUDED IN THE UNIT CONTRACT PRICE BID FOR THE SEVERAL PAY ITEMS.

TEMPORARY DRAINAGE AT END BENT

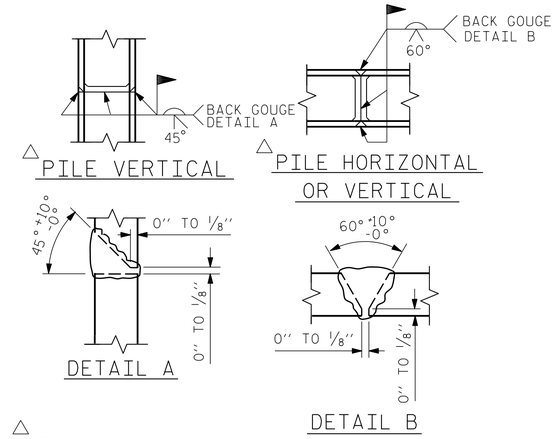

PILE SPLICE DETAILS

BAR TYPES

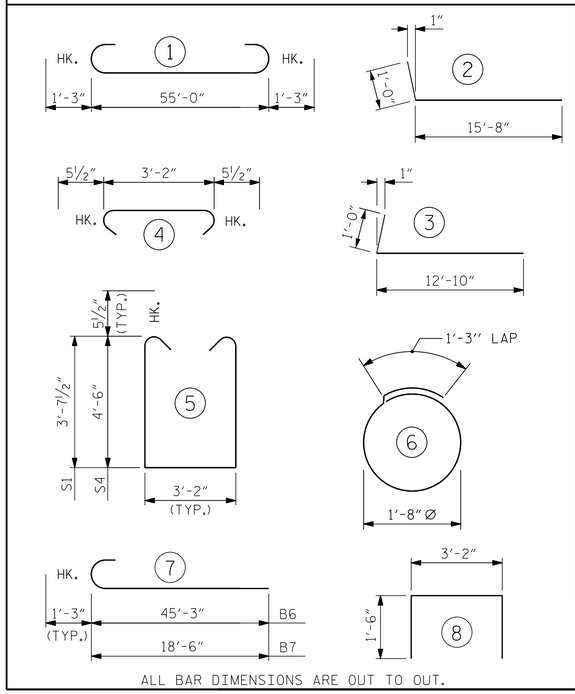

ALL BAR DIMENSIONS ARE OUT TO OUT.

BILL OF MATERIAL

END BENT No. 1

BAR	NO.	SIZE	TYPE	LENGTH	WEIGHT
B1	4	#9	1	57'-6"	782
B2	6	#5	STR	55'-2"	345
B3	8	#4	STR	28'-10"	154
B4	17	#4	STR	3'-2"	36
B5	2	#5	STR	13'-1"	27
B6	4	#9	7	46'-6"	632
B7	4	#9	7	19'-9"	269
B8	8	#4	STR	10'-6"	56
B9	4	#4	STR	8'-1"	22
H1	54	#6	2	16'-8"	1352
H2	40	#6	3	13'-10"	831
K1	26	#4	STR	3'-7"	62
S1	58	#5	5	11'-4"	686
S2	88	#5	4	4'-1"	375
S3	36	#4	6	6'-6"	156
S4	30	#5	5	13'-1"	409
U1	20	#4	8	6'-2"	82
V1	82	#4	STR	6'-8"	365
V2	28	#5	STR	10'-11"	319
V3	16	#5	STR	11'-3"	188
V4	14	#5	STR	9'-11"	145
V5	24	#5	STR	9'-8"	242

REINFORCING STEEL 7,535 LBS.

CLASS A CONCRETE BREAKDOWN

POUR #1	CAP, LOWER PART OF WINGS AND CONCRETE COLLARS	39.1 C.Y.
POUR #2	UPPER PART OF WINGS	8.2 C.Y.
TOTAL CLASS A CONCRETE		47.3 C.Y.

HP 12 X 53 STEEL PILES
NO: 9 810 L.F.

PILE DRIVING EQUIPMENT SETUP FOR HP 12 X 53 STEEL PILES 9 EA.

PILE REDRIVES 5 EA.

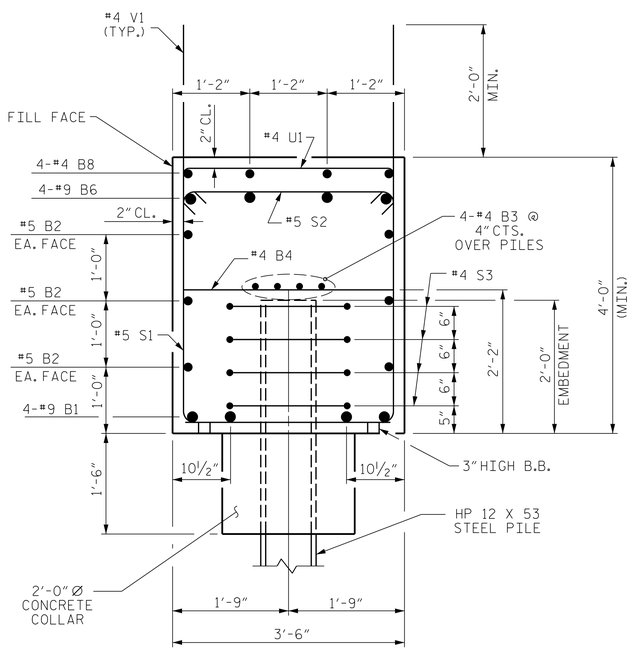

SECTION A-A

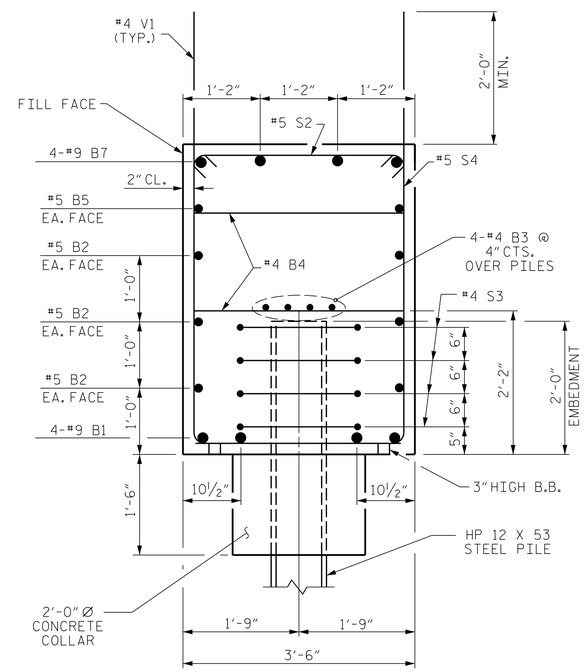

SECTION B-B

NOTES

THE CONCRETE IN THE SHADED AREA OF THE WING SHALL BE POURED AFTER THE BARRIER RAILS ARE CAST IF SLIP FORMING IS USED.

THE TOP SURFACE OF THE END BENT CAP AND WINGS, EXCEPT THE BEARING AREA AND THE AREA OUTSIDE THE EDGE OF SUPERSTRUCTURE, SHALL BE RAKED TO A DEPTH OF 1/4".

PROJECT NO. R-2582A
NORTHAMPTON COUNTY
STATION: 192+85.76 -L-

SHEET 3 OF 3

ENGINEER OF RECORD:
3/26/2019
NORTH CAROLINA PROFESSIONAL SEAL 37400 ENGINEER GREGORY M. GILLAND
DocuSigned by: Gregory M. Gilland
A39EA9DE32D4E...
WETHERILL ENGINEERING
1223 Jones Franklin Rd.
Raleigh, N.C. 27606
Bus: 919 851 8077
Fax: 919 851 8107
LICENSE NO. F-0377

STATE OF NORTH CAROLINA
DEPARTMENT OF TRANSPORTATION
RALEIGH

SUBSTRUCTURE
END BENT No. 1
(RIGHT LANE)

REVISIONS						SHEET NO.
NO.	BY:	DATE:	NO.	BY:	DATE:	S4-26
1			3			TOTAL SHEETS
2			4			38

DRAWN BY : D. HODGE DATE : 11/18
CHECKED BY : G.M. GILLAND DATE : 11/18

DOCUMENT NOT CONSIDERED FINAL UNLESS ALL SIGNATURES COMPLETED

P:\2018\181270\2 R-2582A\Structures\Revision (Site 2)\Site 2\DGN\RIGHT LANE\R2582A_SMU_ EB_650129rev.dgn
3/25/2019 8:20:46 AM

DocuSign Envelope ID: 817B1D73-88BA-49A0-9F22-45781A03197E

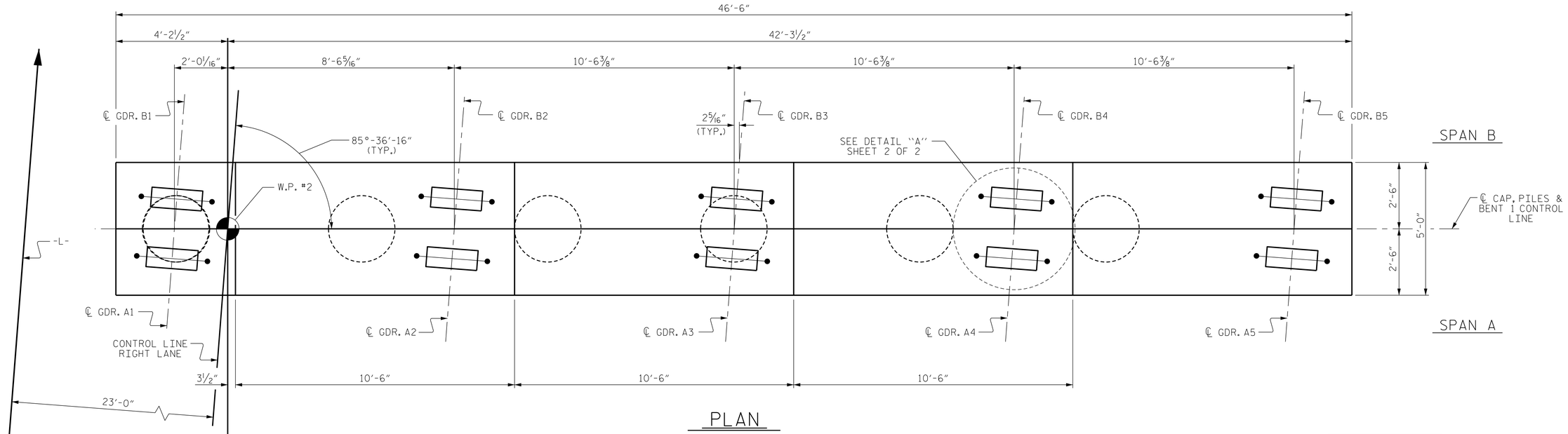

PLAN

NOTE:
INVERT ALTERNATE STIRRUPS

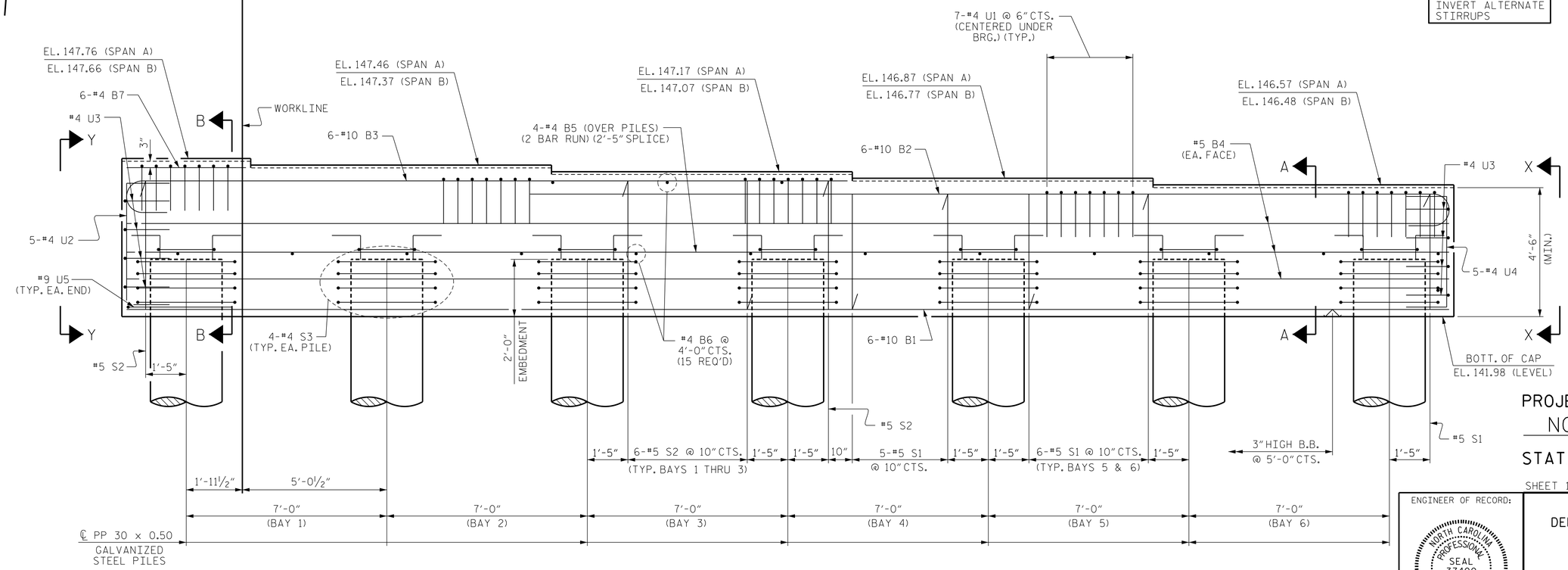

ELEVATION

FOR STEEL PIPE PILE REINFORCING STEEL, CONCRETE QUANTITIES & SPLICE DETAIL, SEE "30" STEEL PIPE PILE" STANDARD, FOR SECTION A-A, SECTION B-B AND DETAIL "A", SEE SHEET 2 OF 2

PROJECT NO. R-2582A
NORTHAMPTON COUNTY
STATION: 192+85.76 -L-

SHEET 1 OF 2

ENGINEER OF RECORD:

NORTH CAROLINA PROFESSIONAL SEAL 37400 ENGINEER GREGORY M. GILLAND
A096A96C0A4A4A0...
2/1/2019

WETHERILL ENGINEERING
1223 Jones Franklin Rd.
Raleigh, N.C. 27606
Bus: 919 851 8077
Fax: 919 851 8107
LICENSE NO. F-0377

STATE OF NORTH CAROLINA
DEPARTMENT OF TRANSPORTATION
RALEIGH

SUBSTRUCTURE
BENT No. 1
(RIGHT LANE)

REVISIONS						SHEET NO.
NO.	BY:	DATE:	NO.	BY:	DATE:	S4-27
1			3			TOTAL SHEETS
2			4			38

DRAWN BY : D. HODGE DATE : 1/19
CHECKED BY : G.M. GILLAND DATE : 1/19

DOCUMENT NOT CONSIDERED FINAL UNLESS ALL SIGNATURES COMPLETED

P:\2018\18127.02 R-2582A\Structures\Revision (Site 2)\Site 2\DGN\RIGHT LANE\R2582A_SMU_ BT_650129rev.dgn
2/1/2019 8:07:08 AM

DocuSign Envelope ID: 817B1D73-88BA-49A0-9F22-45781A03197E

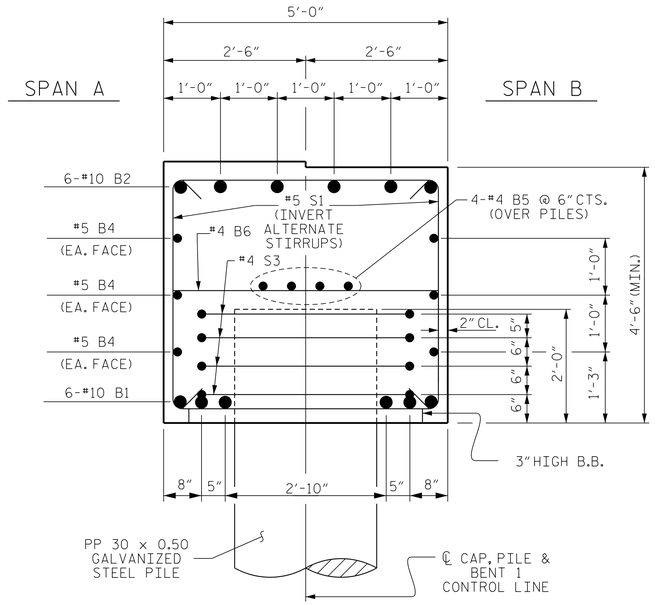

SECTION A-A

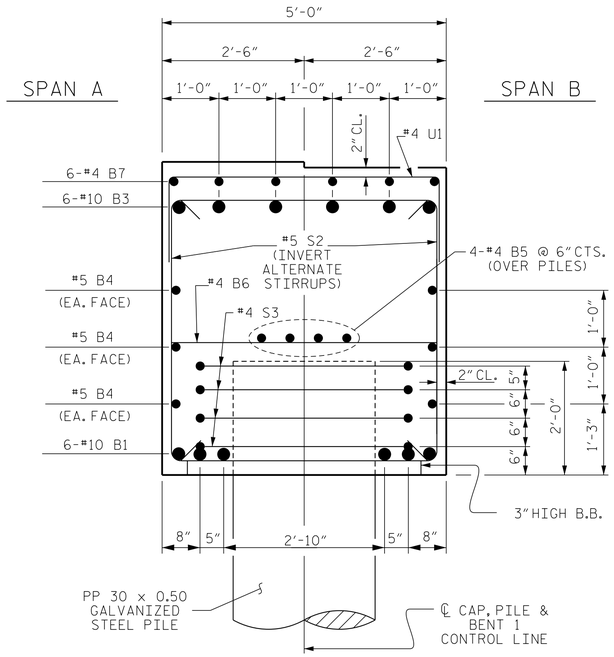

SECTION B-B

BAR TYPES

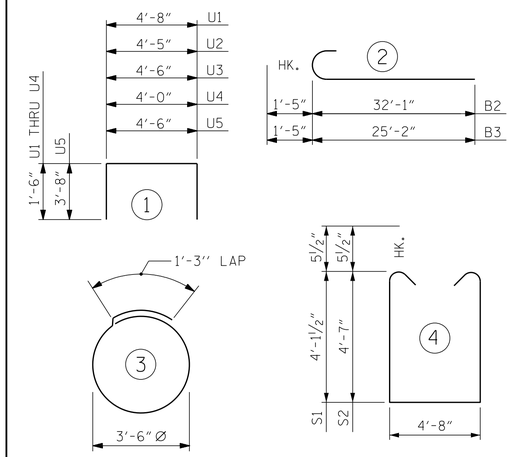

ALL BAR DIMENSIONS ARE OUT TO OUT.

BILL OF MATERIAL

BENT No. 1

BAR	NO.	SIZE	TYPE	LENGTH	WEIGHT
B1	6	#10	STR	46'-2"	1192
B2	6	#10	2	33'-6"	865
B3	6	#10	2	26'-7"	686
B4	6	#5	STR	46'-2"	289
B5	8	#4	STR	24'-4"	130
B6	15	#4	STR	4'-8"	47
B7	6	#4	STR	4'-2"	17
S1	18	#5	4	13'-10"	260
S2	20	#5	4	14'-9"	308
S3	28	#4	3	12'-3"	229
U1	35	#4	1	7'-8"	179
U2	5	#4	1	7'-5"	25
U3	8	#4	1	7'-6"	40
U4	5	#4	1	7'-0"	23
U5	2	#9	1	11'-10"	80

REINFORCING STEEL 4,370 LBS.

CLASS A CONCRETE 40.0 C.Y.

NOTE:
THE VOLUME OF CONCRETE DISPLACED BY THE PIPE PILES HAS BEEN DEDUCTED FROM THE TOTAL.

PP 30" x 0.50 GALVANIZED STEEL PILES
NO: 7 LIN. FT.= 819

PILE REDRIVES 4 EA.

PILE DRIVING EQUIPMENT SETUP FOR PP 30 x 0.50 STEEL PILES 7 EA.

NOTES:

STIRRUPS AND "U" BARS IN CAP MAY BE SHIFTED AS NECESSARY TO CLEAR ANCHOR BOLTS.

GALVANIZE THE TOP 58 FEET OF EACH BENT No. 1 PILE IN ACCORDANCE WITH SECTION 1076 OF THE STANDARD SPECIFICATIONS.

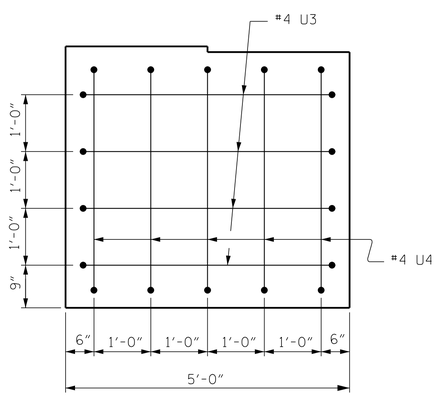

VIEW X-X

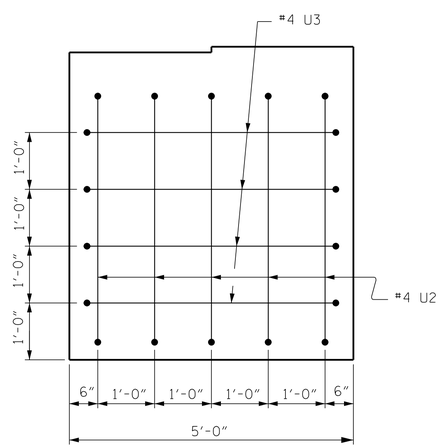

VIEW Y-Y

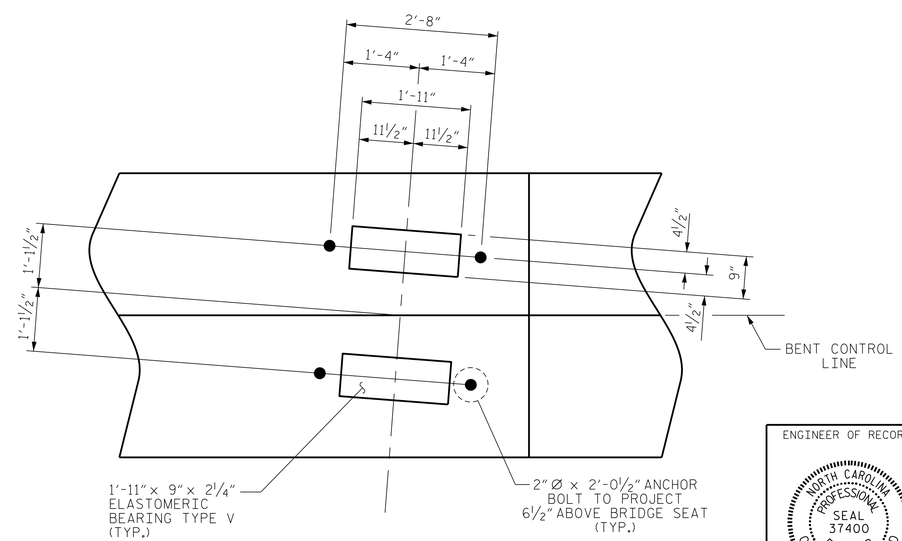

DETAIL "A"

(TYP. EACH GIRDER)

PROJECT NO. R-2582A
NORTHAMPTON COUNTY
STATION: 192+85.76 -L-

SHEET 2 OF 2

ENGINEER OF RECORD:

NORTH CAROLINA PROFESSIONAL SEAL 37400 ENGINEER G. M. GILLAND

2/1/2019

WETHERILL ENGINEERING
1223 Jones Franklin Rd.
Raleigh, N.C. 27606
Bus: 919 851 8077
Fax: 919 851 8107
LICENSE NO. F-0377

STATE OF NORTH CAROLINA
DEPARTMENT OF TRANSPORTATION
RALEIGH

SUBSTRUCTURE
BENT No. 1
(RIGHT LANE)

REVISIONS						SHEET NO.
NO.	BY:	DATE:	NO.	BY:	DATE:	S4-28
1			3			TOTAL SHEETS
2			4			38

DRAWN BY : D. HODGE DATE : 1/19
CHECKED BY : G.M. GILLAND DATE : 1/19

DOCUMENT NOT CONSIDERED FINAL UNLESS ALL SIGNATURES COMPLETED

P:\2018\18127.02_R-2582A\Structures\Revision (Site 2)\Site 2\DGN\RIGHT LANE\R2582A_SMU_BT_650129rev.dgn
2/1/2019 8:07:28 AM

DocuSign Envelope ID: 817B1D73-88BA-49A0-9F22-45781A03197E

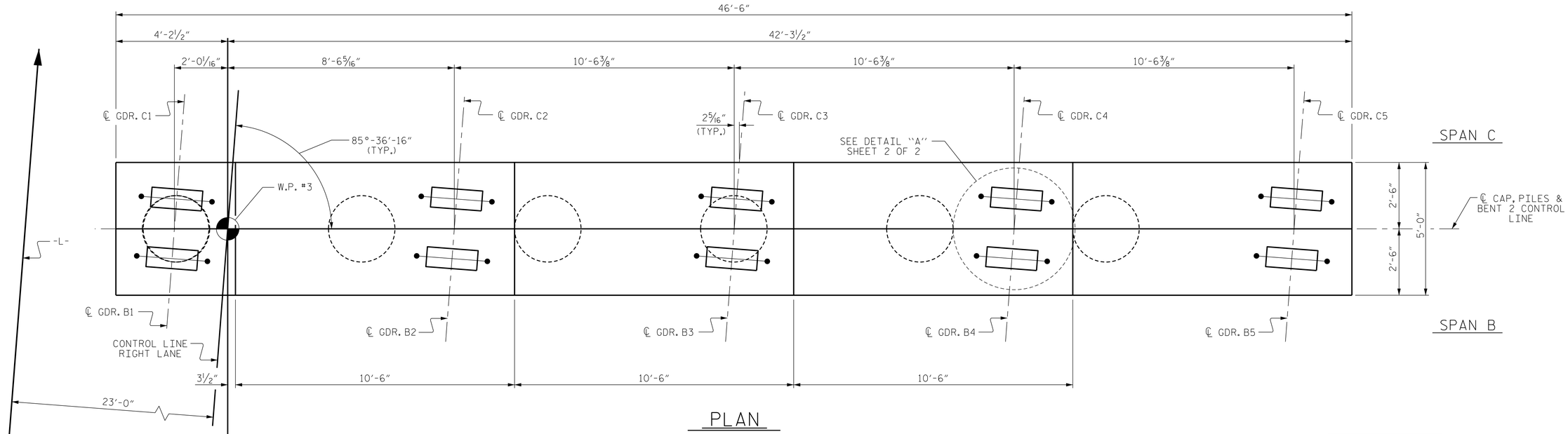

PLAN

NOTE:
INVERT ALTERNATE STIRRUPS

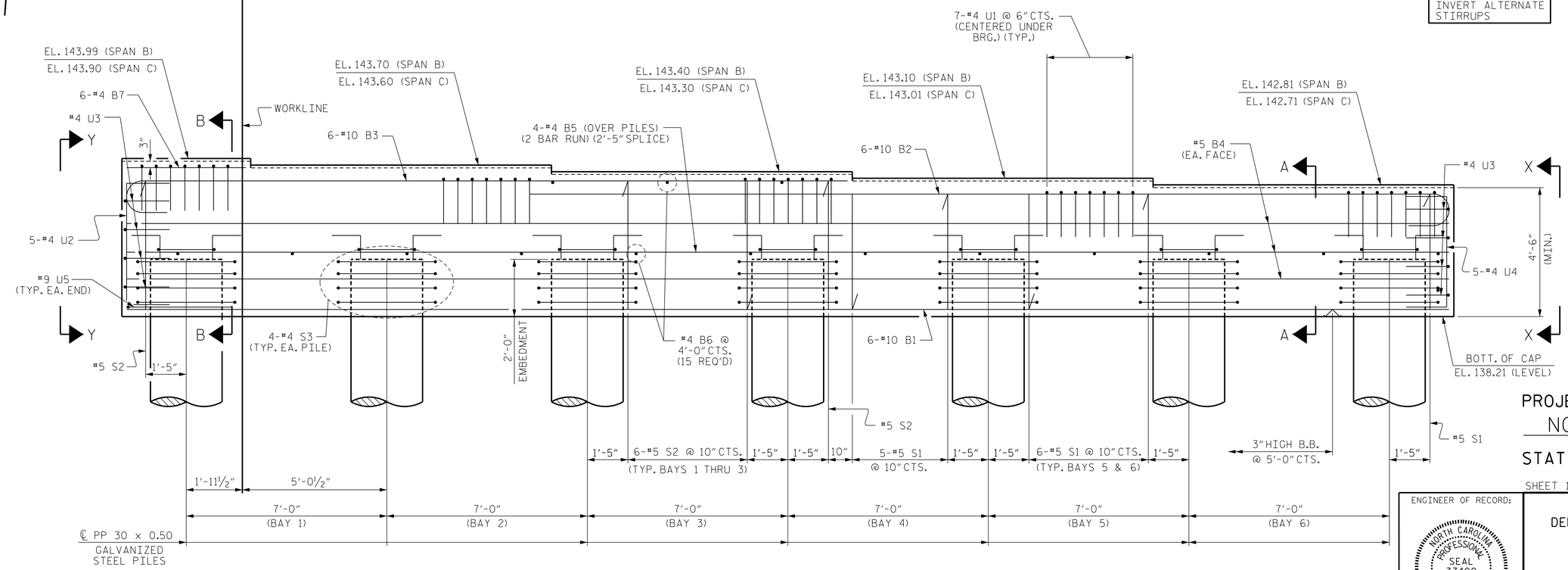

ELEVATION

FOR STEEL PIPE PILE REINFORCING STEEL, CONCRETE QUANTITIES & SPLICE DETAIL, SEE "30" STEEL PIPE PILE" STANDARD, FOR SECTION A-A, SECTION B-B AND DETAIL "A", SEE SHEET 2 OF 2

PROJECT NO. R-2582A
NORTHAMPTON COUNTY
STATION: 192+85.76 -L-

SHEET 1 OF 2

ENGINEER OF RECORD:
NORTH CAROLINA PROFESSIONAL SEAL 37400 ENGINEER
DocuSigned by: Gregory M. Gilland
A99BA9C0C4...
2/1/2019

WETHERILL ENGINEERING
1223 Jones Franklin Rd.
Raleigh, N.C. 27606
Bus: 919 851 8077
Fax: 919 851 8107
LICENSE NO. F-0377

STATE OF NORTH CAROLINA
DEPARTMENT OF TRANSPORTATION
RALEIGH

SUBSTRUCTURE
BENT No. 2
(RIGHT LANE)

REVISIONS						SHEET NO.
NO.	BY:	DATE:	NO.	BY:	DATE:	S4-29
1			3			TOTAL SHEETS
2			4			38

DRAWN BY : D. HODGE DATE : 1/19
CHECKED BY : G.M. GILLAND DATE : 1/19

DOCUMENT NOT CONSIDERED FINAL UNLESS ALL SIGNATURES COMPLETED

P:\2018\18127.02 R-2582A\Structures\Revision (Site 2\Site 2\DGN\RIGHT LANE\R2582A_SMU_ BT_650129rev.dgn
2/1/2019 8:07:47 AM

DocuSign Envelope ID: 817B1D73-88BA-49A0-9F22-45781A03197E

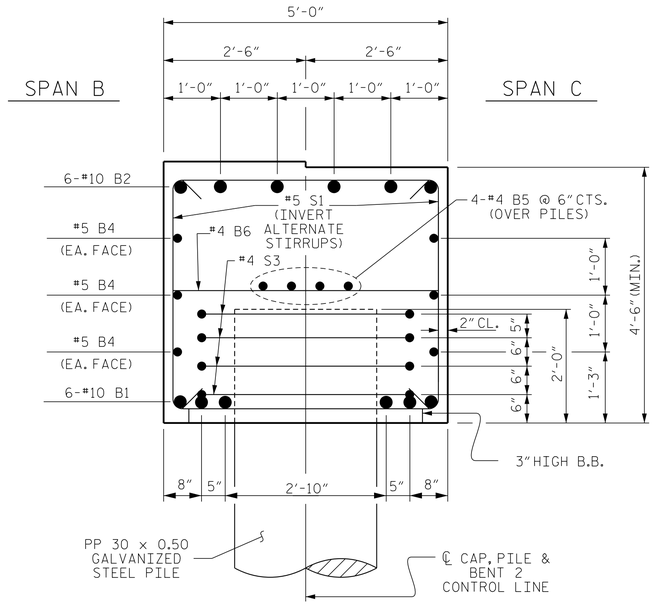

SECTION A-A

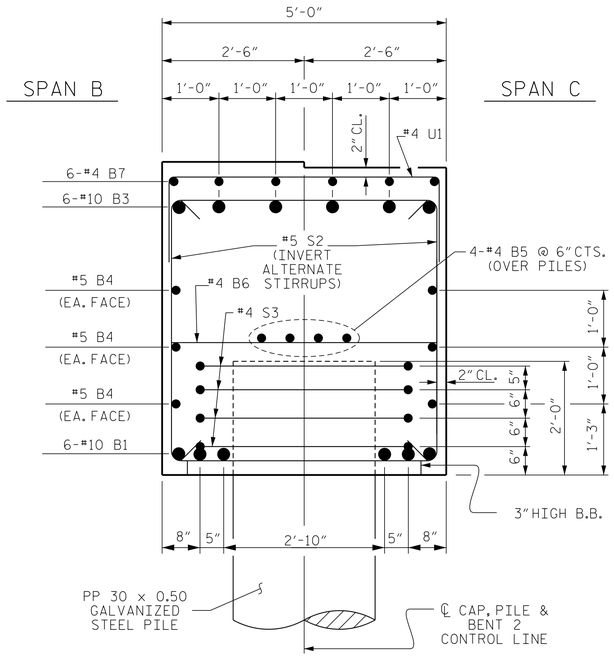

SECTION B-B

BAR TYPES

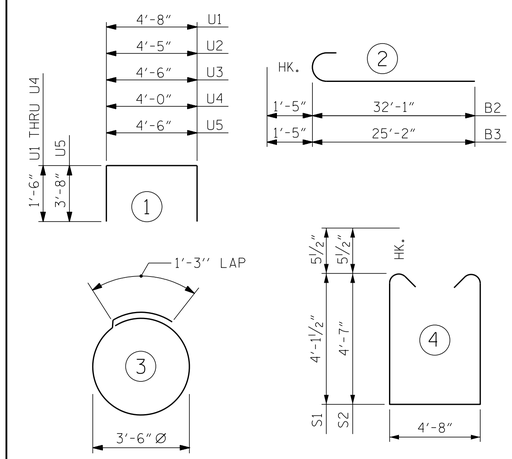

ALL BAR DIMENSIONS ARE OUT TO OUT.

BILL OF MATERIAL

BENT No. 2

BAR	NO.	SIZE	TYPE	LENGTH	WEIGHT
B1	6	#10	STR	46'-2"	1192
B2	6	#10	2	33'-6"	865
B3	6	#10	2	26'-7"	686
B4	6	#5	STR	46'-2"	289
B5	8	#4	STR	24'-4"	130
B6	15	#4	STR	4'-8"	47
B7	6	#4	STR	4'-2"	17
S1	18	#5	4	13'-10"	260
S2	20	#5	4	14'-9"	308
S3	28	#4	3	12'-3"	229
U1	35	#4	1	7'-8"	179
U2	5	#4	1	7'-5"	25
U3	8	#4	1	7'-6"	40
U4	5	#4	1	7'-0"	23
U5	2	#9	1	11'-10"	80

REINFORCING STEEL 4,370 LBS.

CLASS A CONCRETE 40.0 C.Y.

NOTE:
THE VOLUME OF CONCRETE DISPLACED BY THE PIPE PILES HAS BEEN DEDUCTED FROM THE TOTAL.

PP 30"x 0.50 GALVANIZED STEEL PILES
NO: 7 LIN. FT.= 854

PILE REDRIVES 4 EA.

PILE DRIVING EQUIPMENT SETUP FOR PP 30 x 0.50 STEEL PILES 7 EA.

NOTES:

STIRRUPS AND "U" BARS IN CAP MAY BE SHIFTED AS NECESSARY TO CLEAR ANCHOR BOLTS.

GALVANIZE THE TOP 54 FEET OF EACH BENT No. 2 PILE IN ACCORDANCE WITH SECTION 1076 OF THE STANDARD SPECIFICATIONS.

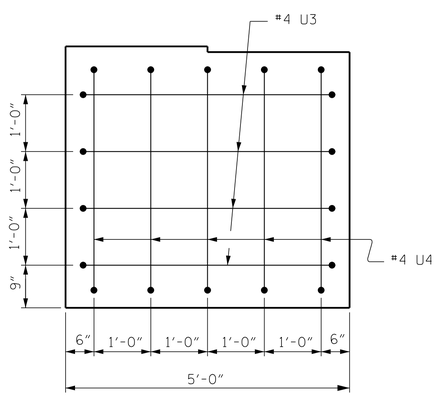

VIEW X-X

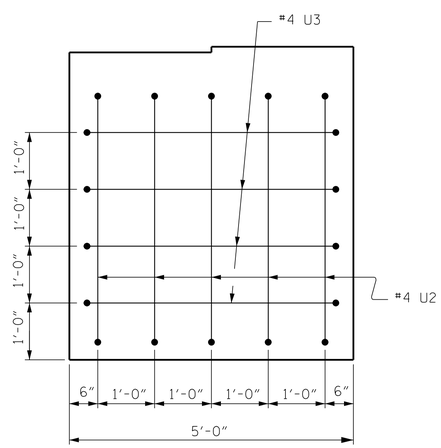

VIEW Y-Y

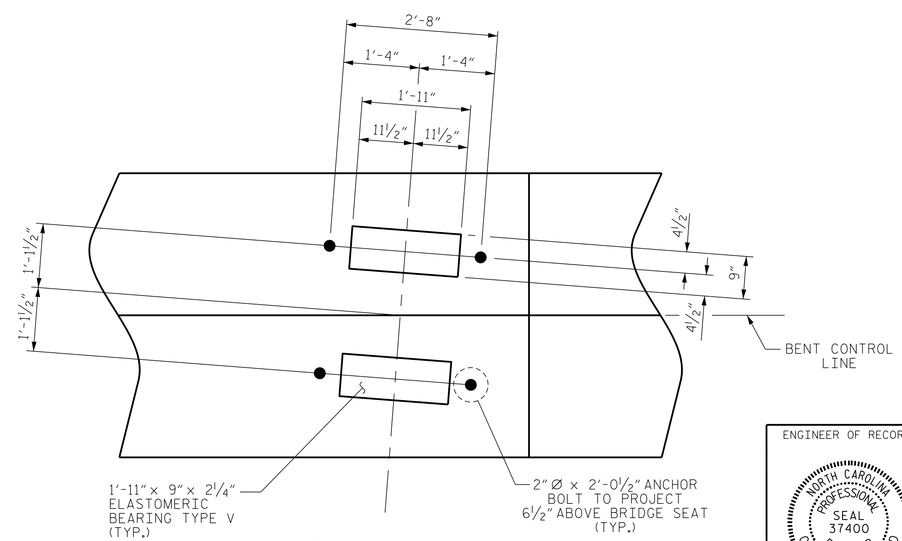

DETAIL "A"

(TYP. EACH GIRDER)

PROJECT NO. R-2582A
NORTHAMPTON COUNTY
STATION: 192+85.76 -L-

SHEET 2 OF 2

ENGINEER OF RECORD:
NORTH CAROLINA PROFESSIONAL SEAL 37400 ENGINEER G.M. GILLAND
A096A0F2-DC4A-4E0A-A
2/1/2019

WETHERILL ENGINEERING
1223 Jones Franklin Rd.
Raleigh, N.C. 27606
Bus: 919 851 8077
Fax: 919 851 8107
LICENSE NO. F-0377

STATE OF NORTH CAROLINA
DEPARTMENT OF TRANSPORTATION
RALEIGH

SUBSTRUCTURE
BENT No. 2
(RIGHT LANE)

REVISIONS						SHEET NO.
NO.	BY:	DATE:	NO.	BY:	DATE:	S4-30
1			3			TOTAL SHEETS
2			4			38

DOCUMENT NOT CONSIDERED FINAL UNLESS ALL SIGNATURES COMPLETED

DRAWN BY : D. HODGE DATE : 1/19
CHECKED BY : G.M. GILLAND DATE : 1/19

P:\2018\18127.02_R-2582A\Structures\Revision (Site 2)\Site 2\DGN\RIGHT LANE\R2582A_SMU_BT_650129rev.dgn
2/1/2019 8:08:07 AM

DocuSign Envelope ID: 817B1D73-88BA-49A0-9F22-45781A03197E

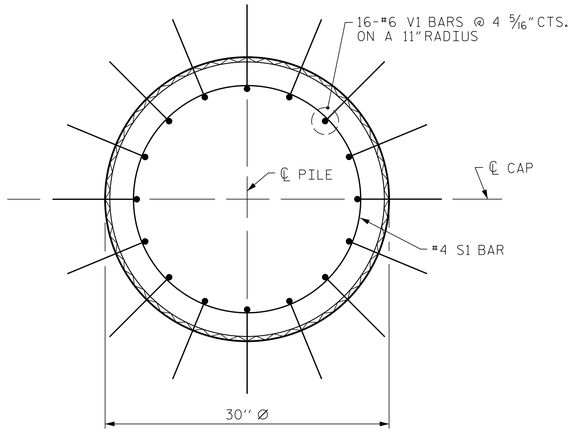

PLAN

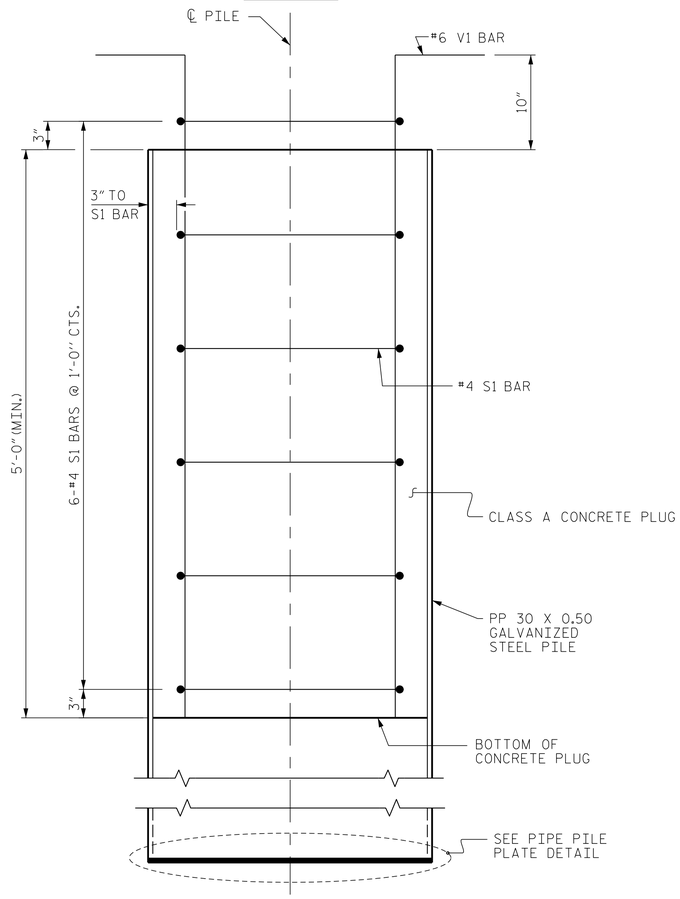

ELEVATION

PP 30 X 0.50 GALVANIZED STEEL PILE

(CLOSED END)

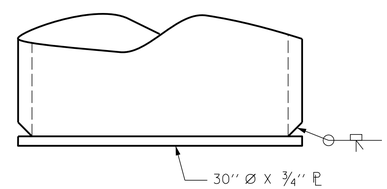

PIPE PILE PLATE DETAIL

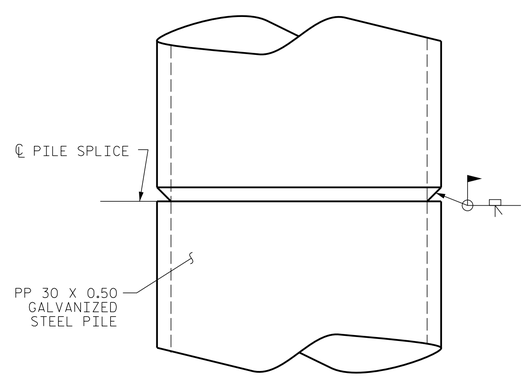

PIPE PILE SPLICE DETAIL

NOTES

PIPE PILES SHALL BE IN ACCORDANCE WITH SECTION 1084 OF THE STANDARD SPECIFICATIONS.

GALVANIZE STEEL PIPE PILES IN ACCORDANCE WITH SECTION 1076 OF THE STANDARD SPECIFICATIONS UNLESS METALLIZING IS REQUIRED. GALVANIZING OR METALLIZING PIPE PILE PLATES IS NOT REQUIRED.

PIPE PILE PLATES, SHALL BE IN ACCORDANCE WITH SECTION 450 OF THE STANDARD SPECIFICATIONS.

REMOVE AND REPLACE OR REPAIR TO THE SATISFACTION OF THE ENGINEER PILES THAT ARE DAMAGED, DEFORMED OR COLLAPSED DURING INSTALLATION OR DRIVING.

PILE SPLICES SHALL BE IN ACCORDANCE WITH THE STANDARD SPECIFICATIONS AND AWS D1.1.

FOR CLOSED END PIPE PILES, REMOVE ALL SOIL AND WATER FROM INSIDE THE PILES JUST PRIOR TO PLACING REINFORCING STEEL AND CONCRETE FOR THE CONCRETE PLUG.

FORM THE CONCRETE PLUG SUCH THAT THE REINFORCING STEEL OR CONCRETE DOES NOT MOVE AND THE CLEARANCE FROM THE REINFORCING STEEL TO THE INSIDE OF THE PILE IS MAINTAINED AFTER CONCRETE PLACEMENT. DO NOT PLACE CONCRETE IN THE BENT CAP UNTIL THE CONCRETE PLUG HAS ATTAINED A MINIMUM COMPRESSIVE STRENGTH OF 1500 PSI.

THE REINFORCING STEEL, CLASS A CONCRETE, AND GALVANIZING ARE CONSIDERED INCIDENTAL TO THE CONTRACT UNIT PRICE BID PER LINEAR FOOT FOR PP 30 X 0.50 GALVANIZED STEEL PILES.

BILL OF MATERIAL FOR ONE PP 30 X 0.50 GALVANIZED STEEL PILE

BAR	NO.	SIZE	TYPE	LENGTH	WEIGHT
S1	6	#4	1	7'-7"	30
V1	16	#6	2	6'-10"	164
REINFORCING STEEL =					194 lbs
CLASS A CONCRETE					
5'-0" MINIMUM PLUG					0.8 CY

BAR TYPES

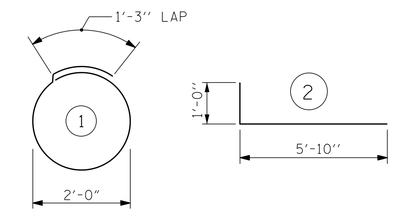

ALL BAR DIMENSIONS ARE OUT TO OUT.

PROJECT NO. R-2582A
NORTHAMPTON COUNTY
STATION: 192+85.76 -L-

ENGINEER OF RECORD:

NORTH CAROLINA PROFESSIONAL SEAL 37400 ENGINEER GREGORY M. GILLAND

Docu Sign Envelope ID: A996A5B2-D7A1-4A1A-A1A1-A1A1A1A1A1A1
2/1/2019

WETHERILL ENGINEERING
1223 Jones Franklin Rd.
Raleigh, N.C. 27606
Bus: 919 851 8077
Fax: 919 851 8107
LICENSE NO. F-0377

STATE OF NORTH CAROLINA
DEPARTMENT OF TRANSPORTATION
RALEIGH

STANDARD
30" STEEL PIPE PILE
(RIGHT LANE)

REVISIONS						SHEET NO.
NO.	BY:	DATE:	NO.	BY:	DATE:	S4-31
1			3			TOTAL SHEETS
2			4			38

DOCUMENT NOT CONSIDERED FINAL UNLESS ALL SIGNATURES COMPLETED

ASSEMBLED BY : D. HODGE	DATE : 1/19		
CHECKED BY : G.M. GILLAND	DATE : 1/19		
DRAWN BY : TLA 8/05	REV. 5/1/06R	MAA/KMM	
CHECKED BY : GM 9/05	REV. 10/1/11	MAA/GM	
	REV. 12/17	MAA/THC	

P:\2018\181127.02 R-2582A\Structures\Revision (Site 2)\Site 2\DGN\RIGHT LANE\R2582A_SMU_ BT_650129rev.dgn
2/1/2019 8:08:27 AM

STD. NO. SPP5

DocuSign Envelope ID: 224528F0-0F95-4F76-A9C5-38258D5BEEA0

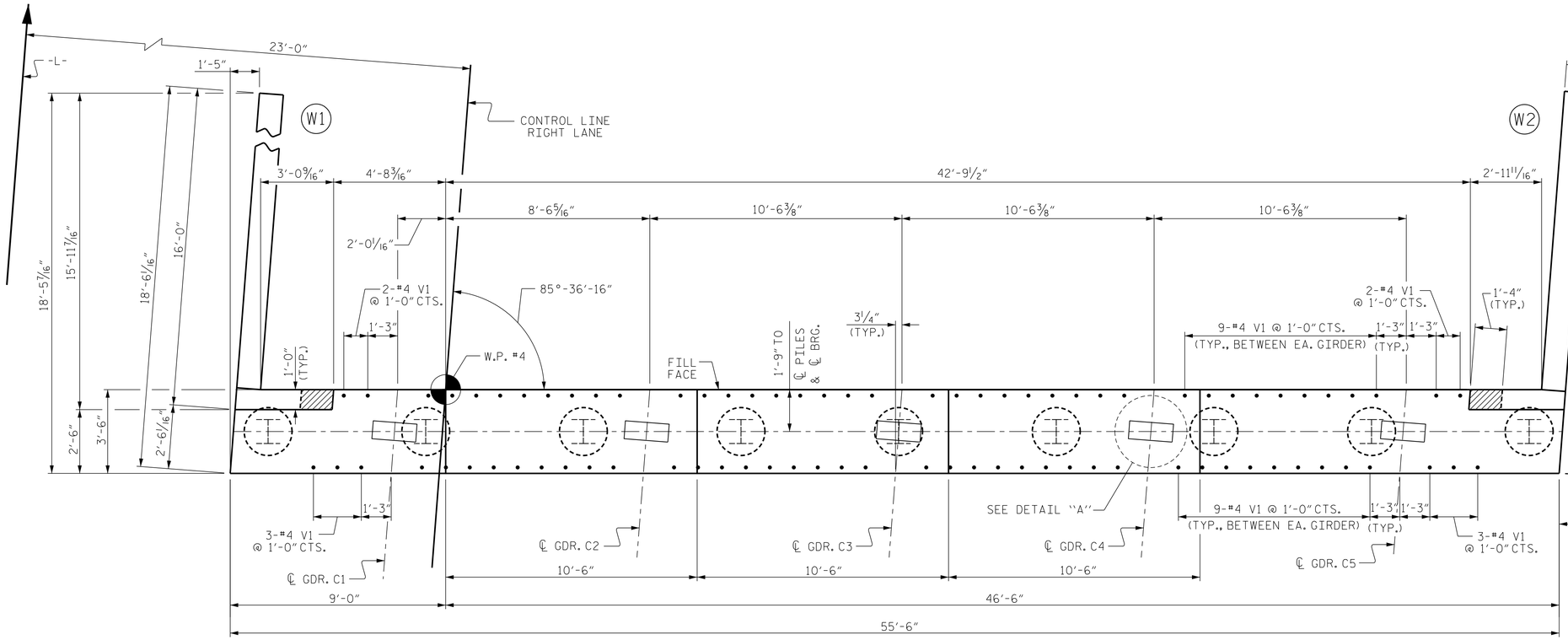

PLAN

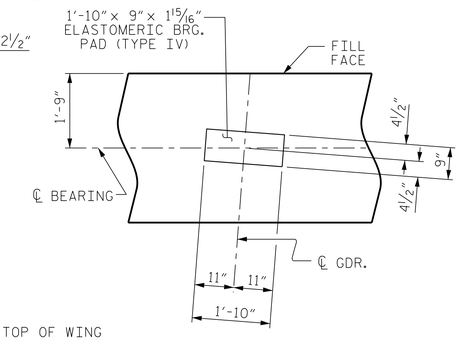

DETAIL "A"

(TYP. EACH GIRDER)

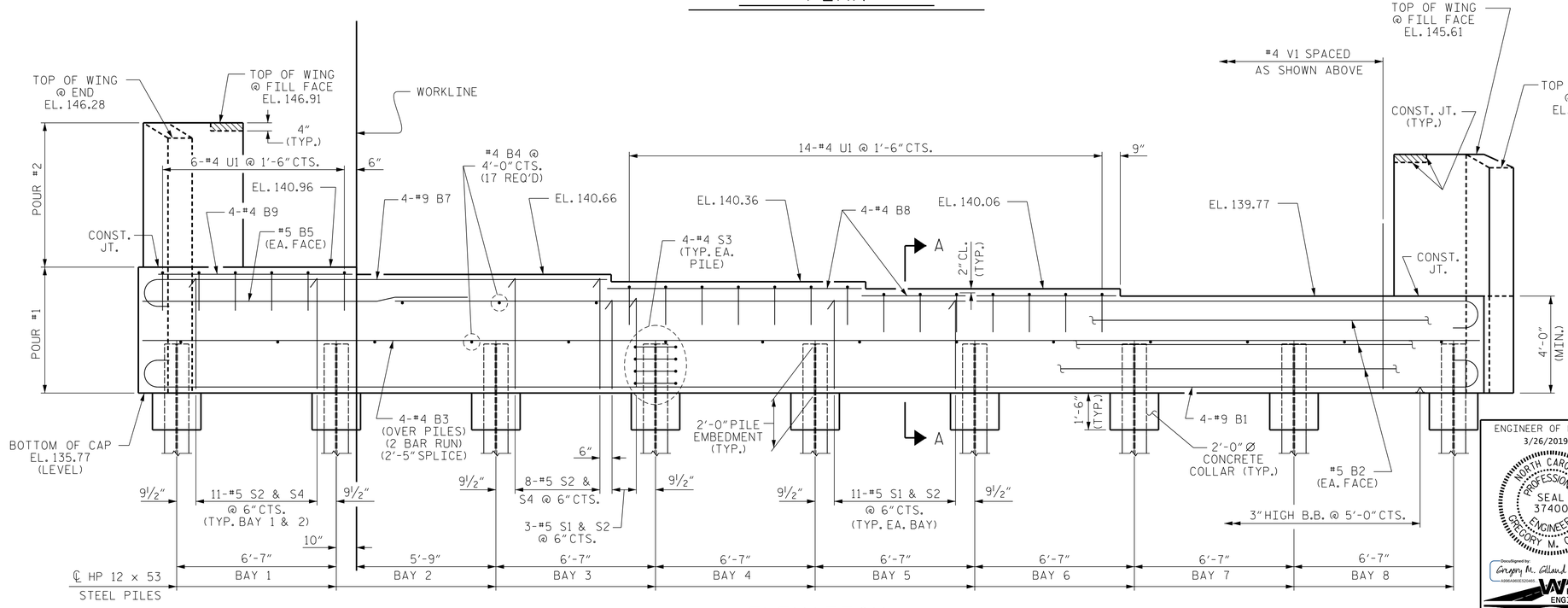

ELEVATION

FOR SECTION A-A & B-B, SEE SHEET 3 OF 3.

PROJECT NO. R-2582A

NORTHAMPTON COUNTY

STATION: 192+85.76 -L-

SHEET 1 OF 3

ENGINEER OF RECORD:
3/26/2019

NORTH CAROLINA PROFESSIONAL SEAL 37400 ENGINEER GREGORY M. GILLAND

Gregory M. Gilland

WETHERILL ENGINEERING

1223 Jones Franklin Rd.
Raleigh, N.C. 27606
Bus: 919 851 8077
Fax: 919 851 8107
LICENSE NO. F-0377

STATE OF NORTH CAROLINA
DEPARTMENT OF TRANSPORTATION
RALEIGH

SUBSTRUCTURE

END BENT No. 2

(RIGHT LANE)

REVISIONS						SHEET NO.
NO.	BY:	DATE:	NO.	BY:	DATE:	S4-32
1			3			TOTAL SHEETS
2			4			38

DRAWN BY : D. HODGE DATE : 11/18

CHECKED BY : G.M. GILLAND DATE : 11/18

DOCUMENT NOT CONSIDERED FINAL UNLESS ALL SIGNATURES COMPLETED

P:\2018\18127.02 R-2582A\Structures\Revision (Site 2\Site 2\DGN\RIGHT LANE\R2582A_SMU_ EB_650129rev.dgn
3/25/2019 8:21:38 AM

DocuSign Envelope ID: 224528F0-0F95-4F76-A9C5-38258D5BEEA0

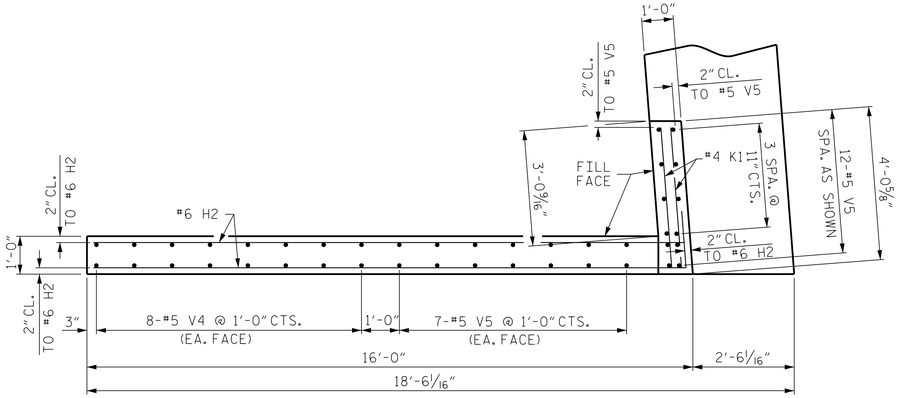

PLAN OF WING - (W1)

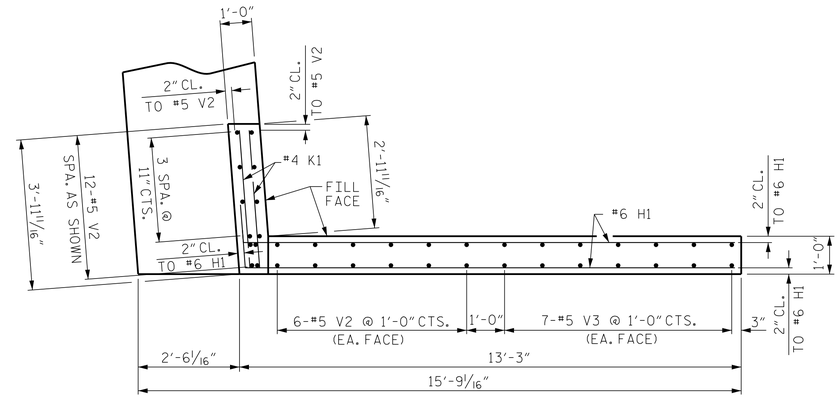

PLAN OF WING - (W2)

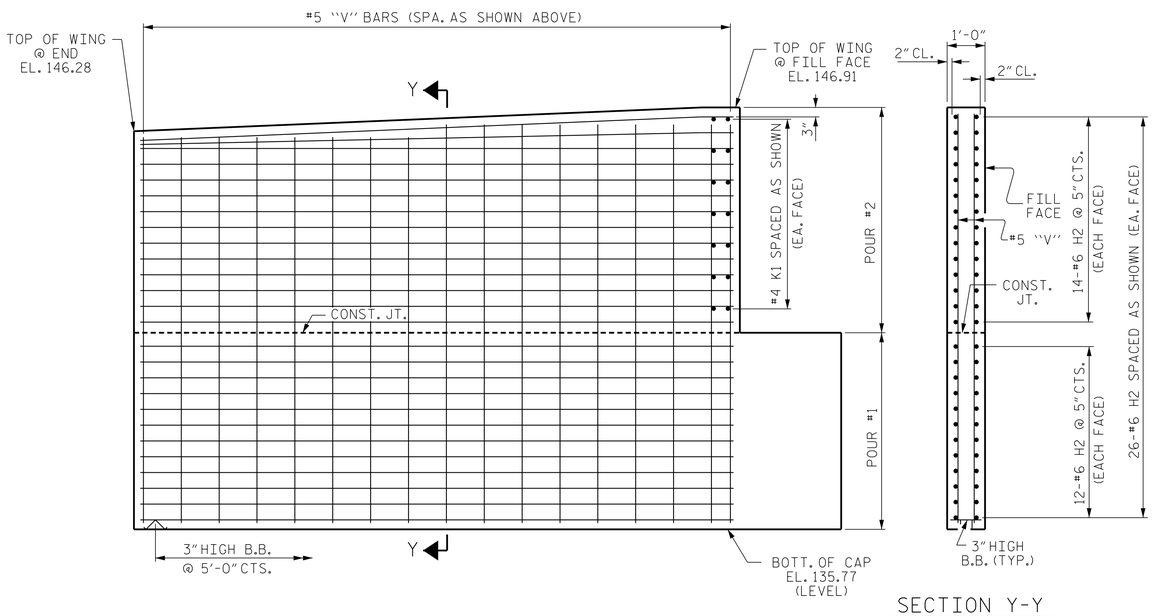

SECTION Y-Y

ELEVATION OF WING - (W1)

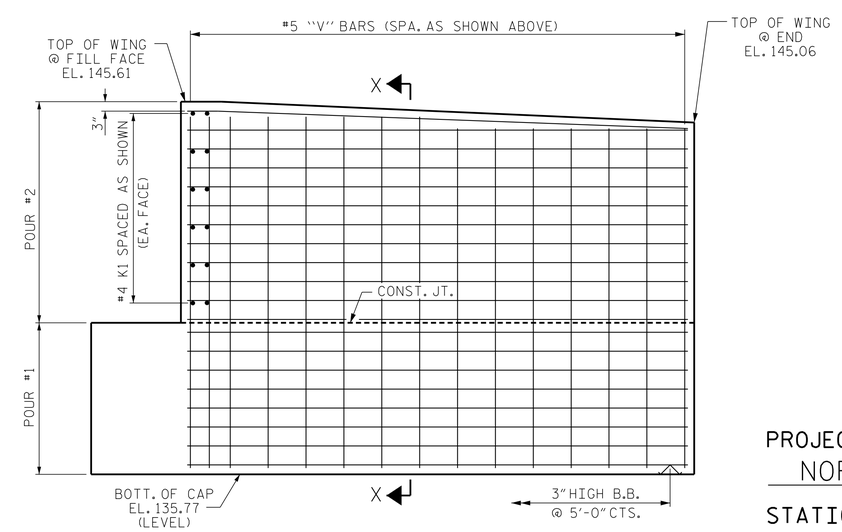

ELEVATION OF WING - (W2)

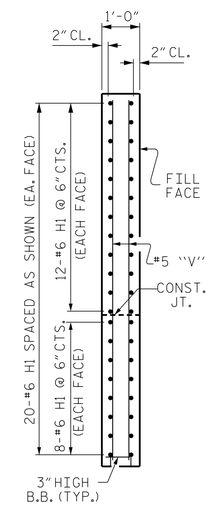

SECTION X-X

PROJECT NO. R-2582A

NORTHAMPTON COUNTY

STATION: 192+85.76 -L-

SHEET 2 OF 3

ENGINEER OF RECORD:
3/26/2019

NORTH CAROLINA PROFESSIONAL SEAL 37400 ENGINEER GREGORY M. GILLAND

DocuSigned by: Gregory M. Gilland

WETHERILL ENGINEERING
1223 Jones Franklin Rd.
Raleigh, N.C. 27606
Bus: 919 851 8077
Fax: 919 851 8107
LICENSE NO. F-0377

STATE OF NORTH CAROLINA
DEPARTMENT OF TRANSPORTATION
RALEIGH

SUBSTRUCTURE
END BENT No. 2
(RIGHT LANE)

REVISIONS						SHEET NO.
NO.	BY:	DATE:	NO.	BY:	DATE:	S4-33
1			3			TOTAL SHEETS
2			4			38

DOCUMENT NOT CONSIDERED FINAL UNLESS ALL SIGNATURES COMPLETED

DRAWN BY :	D. HODGE	DATE :	11/18
CHECKED BY :	G.M. GILLAND	DATE :	11/18

P:\2018\181202 R-2582A\Structures\Revision (Site 2\Site 2\DGN\RIGHT LANE\R2582A_SMU_ EB_650129rev.dgn
3/25/2019 8:22:05 AM

DocuSign Envelope ID: 224528F0-0F95-4F76-A9C5-38258D5BEEA0

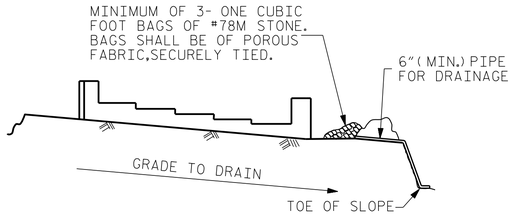

BAGGED STONE AND PIPE SHALL BE PLACED IMMEDIATELY AFTER COMPLETION OF END BENT EXCAVATION. PIPE MAY BE EITHER CONCRETE, CORRUGATED STEEL, CORRUGATED ALUMINUM ALLOY, OR CORRUGATED PLASTIC. PERFORATED PIPE WILL NOT BE ALLOWED.

BAGGED STONE SHALL REMAIN IN PLACE UNTIL THE ENGINEER DIRECTS THAT IT BE REMOVED. THE CONTRACTOR SHALL REMOVE AND DISPOSE OF SILT ACCUMULATIONS AT BAGGED STONE WHEN SO DIRECTED BY THE ENGINEER. BAGS SHALL BE REMOVED AND REPLACED WHENEVER THE ENGINEER DETERMINES THAT THEY HAVE DETERIORATED AND LOST THEIR EFFECTIVENESS.

NO SEPARATE PAYMENT WILL BE MADE FOR THIS WORK AND THE ENTIRE COST OF THIS WORK SHALL BE INCLUDED IN THE UNIT CONTRACT PRICE BID FOR THE SEVERAL PAY ITEMS.

TEMPORARY DRAINAGE AT END BENT

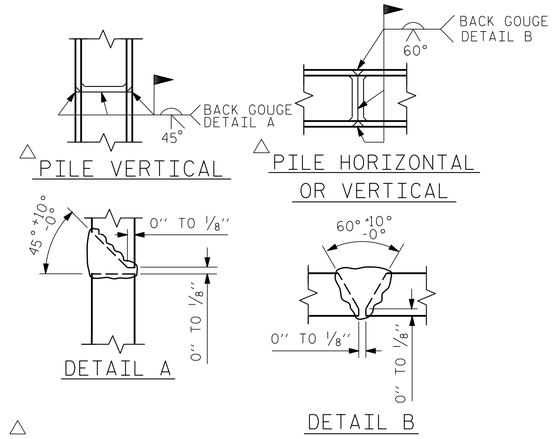

PILE SPLICE DETAILS

BAR TYPES

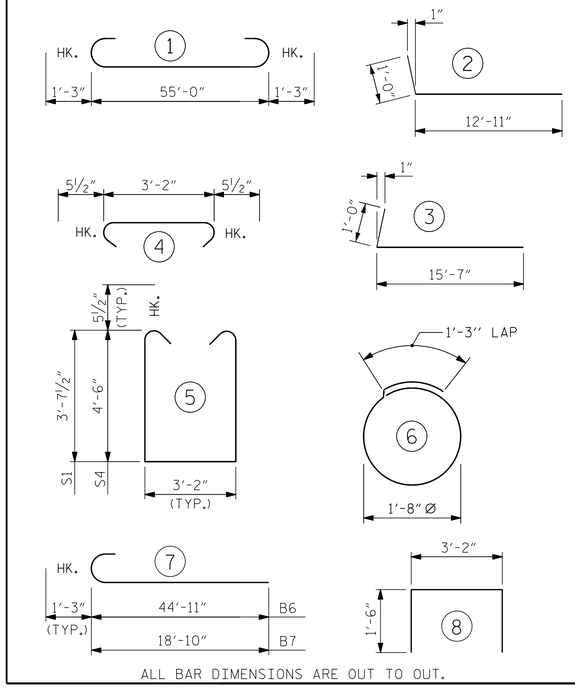

ALL BAR DIMENSIONS ARE OUT TO OUT.

BILL OF MATERIAL

END BENT No. 2

BAR	NO.	SIZE	TYPE	LENGTH	WEIGHT
B1	4	#9	1	57'-6"	782
B2	6	#5	STR	55'-2"	345
B3	8	#4	STR	28'-10"	154
B4	17	#4	STR	3'-2"	36
B5	2	#5	STR	13'-1"	27
B6	4	#9	7	46'-2"	628
B7	4	#9	7	20'-1"	273
B8	8	#4	STR	10'-6"	56
B9	4	#4	STR	8'-4"	22
H1	40	#6	2	13'-11"	836
H2	52	#6	3	16'-7"	1295
K1	26	#4	STR	3'-7"	62
S1	58	#5	5	11'-4"	686
S2	88	#5	4	4'-1"	375
S3	36	#4	6	6'-6"	156
S4	30	#5	5	13'-1"	409
U1	20	#4	8	6'-2"	82
V1	82	#4	STR	6'-8"	365
V2	24	#5	STR	9'-3"	232
V3	14	#5	STR	8'-11"	130
V4	16	#5	STR	10'-2"	170
V5	26	#5	STR	10'-6"	285

REINFORCING STEEL 7,406 LBS.

CLASS A CONCRETE BREAKDOWN

POUR #1	CAP, LOWER PART OF WINGS AND CONCRETE COLLARS	38.8 C.Y.
POUR #2	UPPER PART OF WINGS	7.4 C.Y.
TOTAL CLASS A CONCRETE		46.2 C.Y.

HP 12 X 53 STEEL PILES
NO: 9 900 L.F.

PILE DRIVING EQUIPMENT SETUP FOR HP 12 X 53 STEEL PILES 9 EA.

PILE REDRIVES 5 EA.

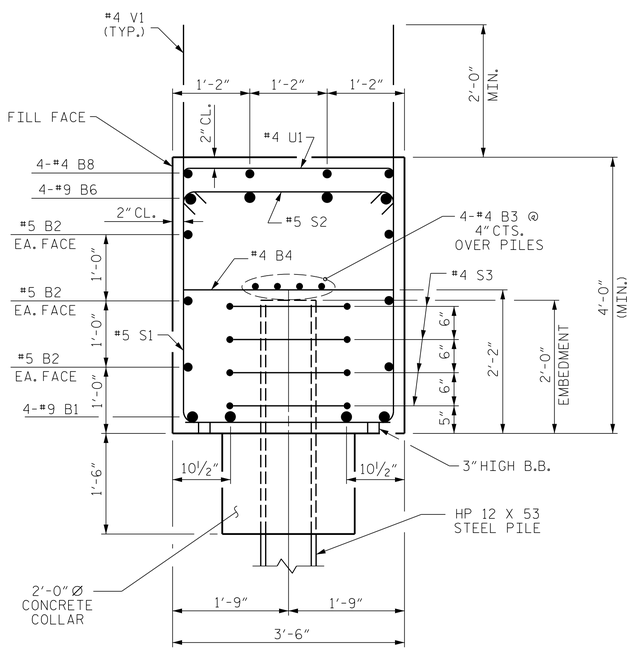

SECTION A-A

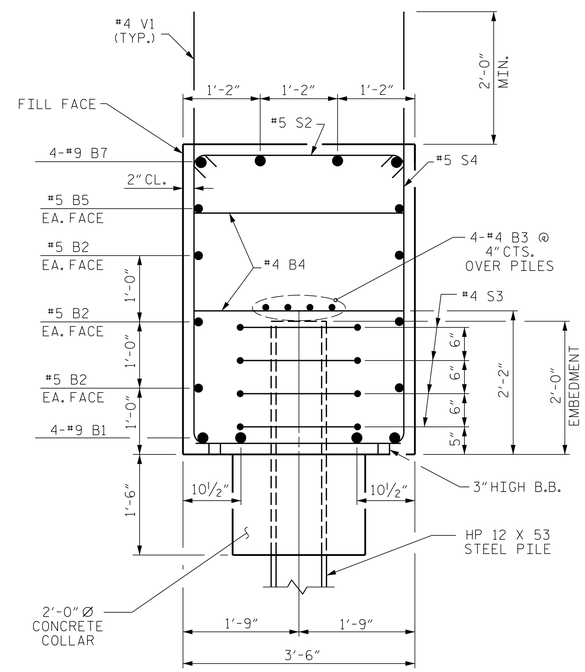

SECTION B-B

NOTES

THE CONCRETE IN THE SHADED AREA OF THE WING SHALL BE POURED AFTER THE BARRIER RAILS ARE CAST IF SLIP FORMING IS USED.

THE TOP SURFACE OF THE END BENT CAP AND WINGS, EXCEPT THE BEARING AREA AND THE AREA OUTSIDE THE EDGE OF SUPERSTRUCTURE, SHALL BE RAKED TO A DEPTH OF 1/4".

PROJECT NO. R-2582A
NORTHAMPTON COUNTY
STATION: 192+85.76 -L-

SHEET 3 OF 3

ENGINEER OF RECORD:
3/26/2019
NORTH CAROLINA PROFESSIONAL SEAL 37400 ENGINEER GREGORY M. GILLAND
DocuSigned by: Gregory M. Gilland
A956A9D0E320485...
WETHERILL ENGINEERING
1223 Jones Franklin Rd.
Raleigh, N.C. 27606
Bus: 919 851 8077
Fax: 919 851 8107
LICENSE NO. F-0377

STATE OF NORTH CAROLINA
DEPARTMENT OF TRANSPORTATION
RALEIGH

SUBSTRUCTURE
END BENT No. 2
(RIGHT LANE)

REVISIONS						SHEET NO.
NO.	BY:	DATE:	NO.	BY:	DATE:	S4-34
1			3			TOTAL SHEETS
2			4			38

DRAWN BY : D. HODGE DATE : 11/18
CHECKED BY : G.M. GILLAND DATE : 11/18

DOCUMENT NOT CONSIDERED FINAL UNLESS ALL SIGNATURES COMPLETED

P:\2018\18127.02 R-2582A\Structures\Revision (Site 2)\Site 2\DGN\RIGHT LANE\R2582A_SMU_ EB_650129rev.dgn
3/25/2019 8:22:45 AM

DocuSign Envelope ID: 817B1D73-88BA-49A0-9F22-45781A03197E

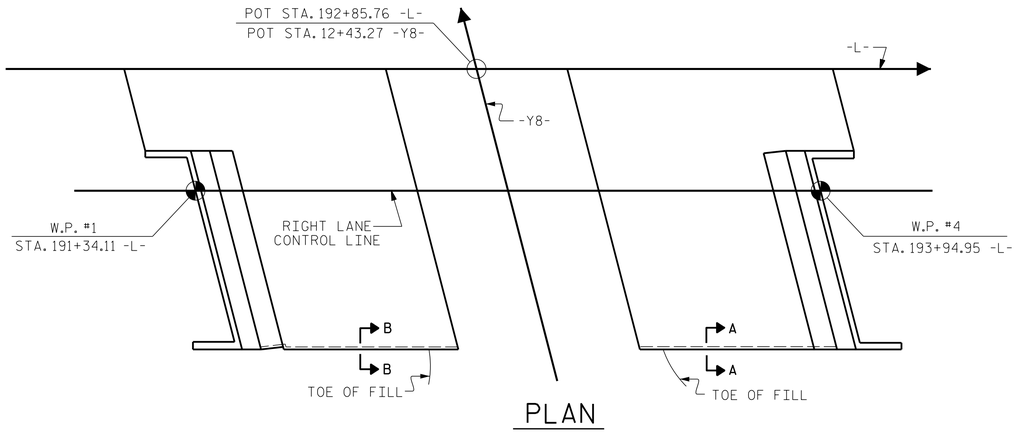

PLAN

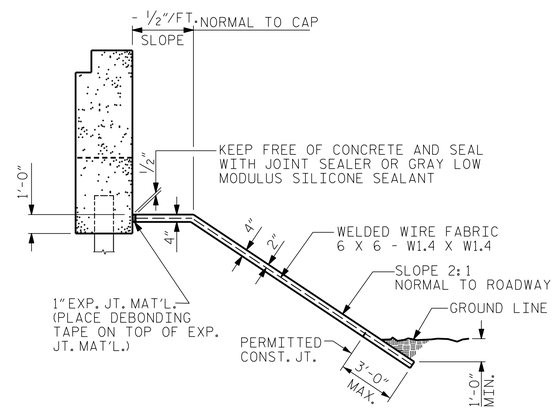

SECTION ALONG ℄ SURVEY WHEN DITCH IS NOT PROVIDED

GENERAL NOTES

SLOPE PROTECTION SHALL BE PLACED UNDER THE ENDS OF THE BRIDGE AS SHOWN IN THE DETAILS. STRAIGHT EDGING WILL NOT BE REQUIRED UNLESS, IN THE OPINION OF THE ENGINEER, VISUAL INSPECTION INDICATES A NEED FOR IT. MEASUREMENT AND PAYMENT SHALL BE AS PRESCRIBED IN SECTION 462 OF THE STANDARD SPECIFICATIONS. FOR BERM WIDTH, SEE GENERAL DRAWING.

SLOPE PROTECTION SHALL CONSIST OF 4" POURED-IN-PLACE CONCRETE PAVING AS SHOWN IN THE DETAILS ON THIS SHEET. CONCRETE SHALL BE CLASS "B". THE CONCRETE SURFACE SHALL BE FLOATED WITH A WOODEN FLOAT AND FINISHED. WELDED WIRE FABRIC REINFORCING SHALL BE 6 X 6 - W1.4 X W1.4, 60" WIDE. SLOPE PROTECTION SHALL BE POURED IN 5' STRIPS AS SHOWN IN THE "POURING DETAIL" WITH 2'-0" LONG #4 BARS PLACED ALONG THE SLOPE BETWEEN STRIPS AT 1'-6" MAXIMUM SPACING. SLOPE PROTECTION MAY BE POURED IN ALTERNATE 4' AND 5' STRIPS AS SHOWN IN THE "OPTIONAL POURING DETAIL" WITH ADJACENT RUNS OF WELDED WIRE FABRIC LAPPING AT LEAST 6". THE COST OF THE WELDED WIRE FABRIC AND #4 BARS, IF USED, SHALL BE INCLUDED IN THE CONTRACT UNIT PRICE BID PER SQUARE YARD FOR SLOPE PROTECTION.

BRIDGE @ STA. 192+85.76 -L-	4 INCH SLOPE PROTECTION	* WELDED WIRE FABRIC 60 INCHES WIDE
	SQUARE YARDS	APPROX. L.F.
END BENT 1	815	1,430
END BENT 2	620	1,085

* QUANTITY SHOWN IS BASED ON 5' POURS.

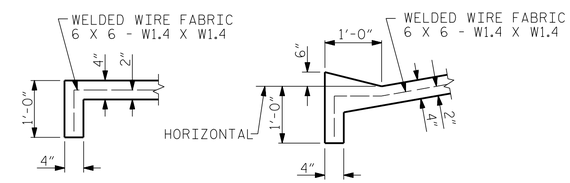

SECTION A-A

SECTION B-B

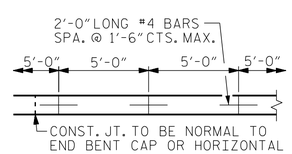

STRIP WIDTHS MAY VARY IN CURVED PORTION.

POURING DETAIL

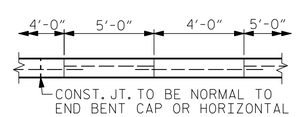

POUR A 4'-0" STRIP FIRST. STRIP WIDTHS MAY VARY IN CURVED PORTION.

OPTIONAL POURING DETAIL

PROJECT NO. R-2582A

NORTHAMPTON COUNTY

STATION: 192+85.76 -L-

SHEET 1 OF 2

ENGINEER OF RECORD:

NORTH CAROLINA PROFESSIONAL SEAL 37400 ENGINEER

DocuSigned by: Gregory M. Gilland
2/1/2019

WETHERILL ENGINEERING

1223 Jones Franklin Rd.
Raleigh, N.C. 27606
Bus: 919 851 8077
Fax: 919 851 8107
LICENSE NO. F-0377

DOCUMENT NOT CONSIDERED FINAL UNLESS ALL SIGNATURES COMPLETED

STATE OF NORTH CAROLINA
DEPARTMENT OF TRANSPORTATION
RALEIGH

STANDARD

SLOPE PROTECTION DETAILS

(RIGHT LANE)

REVISIONS								SHEET NO.
NO.	BY:	DATE:	NO.	BY:	DATE:			S4-35
1			3					TOTAL SHEETS
2			4					38

ASSEMBLED BY : D. HODGE		DATE :	11/18
CHECKED BY : G.M. GILLAND		DATE :	12/18
DRAWN BY : ELR 5/92	REV. 12/21/11		MAA/GM
CHECKED BY : GRP 6/92	REV. 1/16		MAA/TMC
	REV. 12/17		MAA/THC

P:\2018\18127.02 R-2582A\Structures\Revision (Site 2)\Site 2\DGN\RIGHT LANE\R2582A_SMU_ SP_650129rev.dgn
2/1/2019 8:10:08 AM

STD. NO. SP1 (SHT 2)

DocuSign Envelope ID: 2862EEE0-D568-45AA-8E16-EA956DC50B31

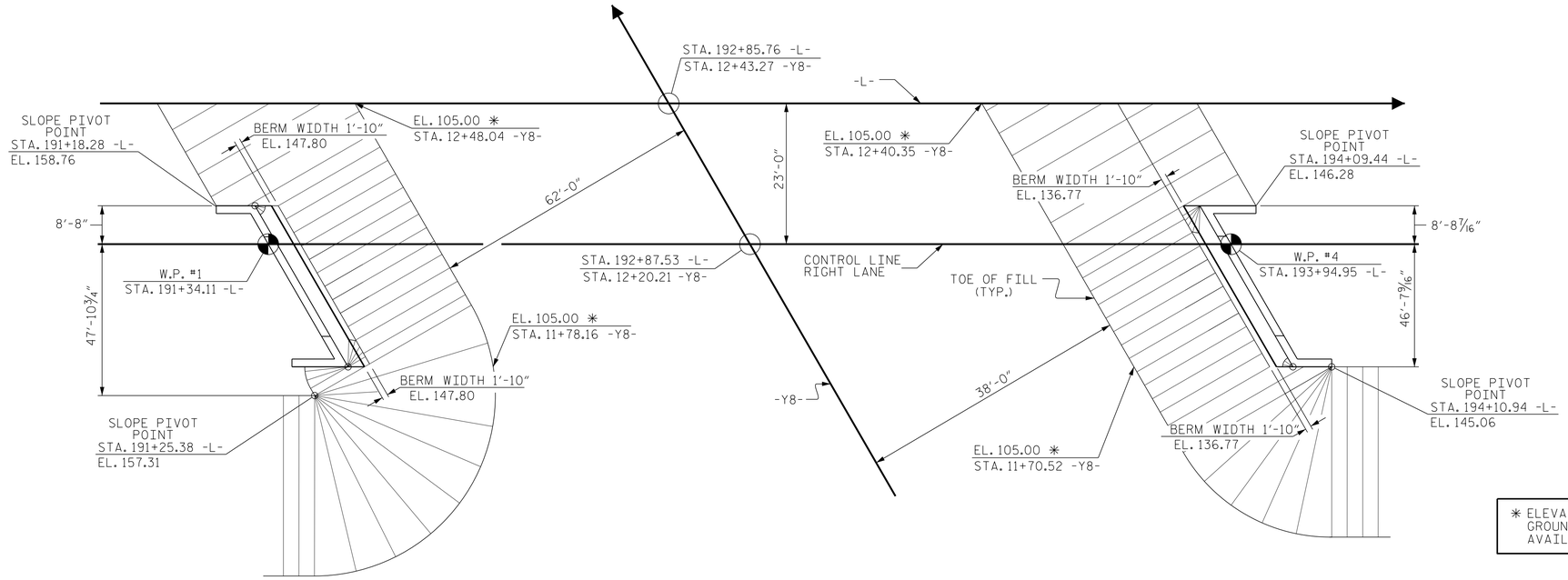

* ELEVATIONS AT APPROXIMATE EXISTING GROUND IS BASED ON BEST INFORMATION AVAILABLE.

PLAN - GRADING

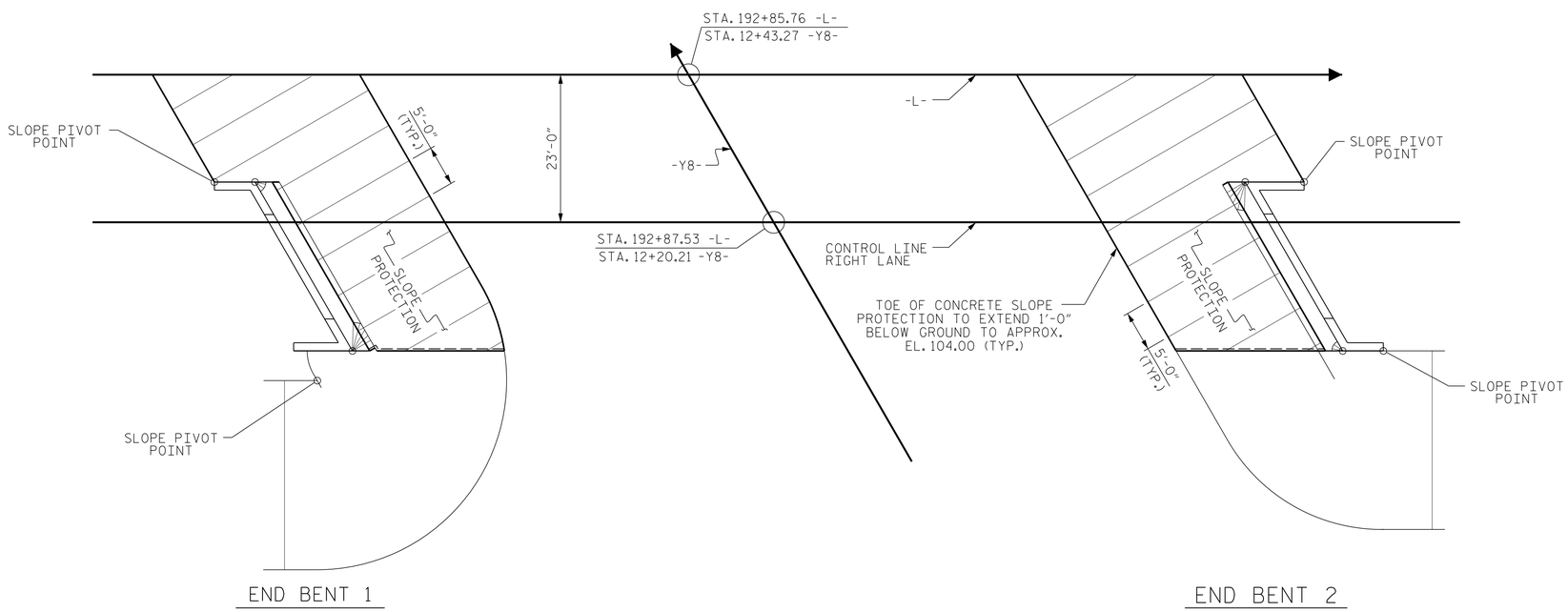

PLAN - CONCRETE PLACEMENT

PROJECT NO. R-2582A

NORTHAMPTON COUNTY

STATION: 192+85.76 -L-

SHEET 2 OF 2

ENGINEER OF RECORD:
5/2/2019

NORTH CAROLINA PROFESSIONAL SEAL 37400 ENGINEER GREGORY M. GILLAND

DocuSigned by: Gregory M. Gilland

WETHERILL ENGINEERING
1223 Jones Franklin Rd.
Raleigh, N.C. 27606
Bus: 919 851 8077
Fax: 919 851 8107
LICENSE NO. F-0377

STATE OF NORTH CAROLINA
DEPARTMENT OF TRANSPORTATION
RALEIGH

STANDARD

SLOPE PROTECTION DETAILS

(RIGHT LANE)

REVISIONS						SHEET NO.
NO.	BY:	DATE:	NO.	BY:	DATE:	S4-36
1			3			TOTAL SHEETS
2			4			38

ASSEMBLED BY : D. HODGE		DATE :	11/18
CHECKED BY : G.M. GILLAND		DATE :	12/18
DRAWN BY : WJH 10/88	REV. 10/1/11		MAA/GM
CHECKED BY : FCJ 10/88	REV. 1/16		MAA/TMG
	REV. 12/17		MAA/THC

DOCUMENT NOT CONSIDERED FINAL UNLESS ALL SIGNATURES COMPLETED

STD. NO. SP2 (SHT 2)

P:\2018\18127.02 R-2582A\Structures\Revision (Site 2)\Site 2\DGN\RIGHT LANE\R2582A_SMU_SP_650129rev.dgn
5/2/2019 2:10:18 PM

DocuSign Envelope ID: 817B1D73-88BA-49A0-9F22-45781A03197E

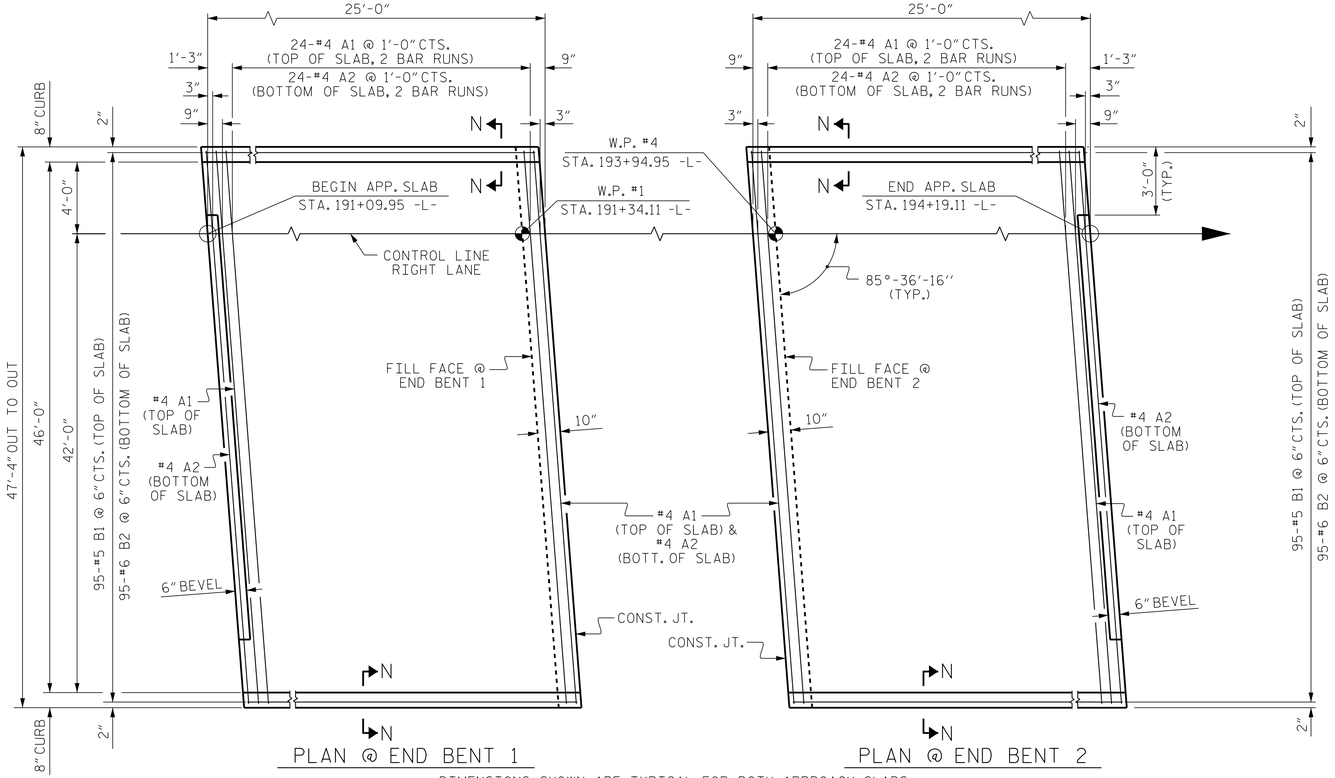

DIMENSIONS SHOWN ARE TYPICAL FOR BOTH APPROACH SLABS

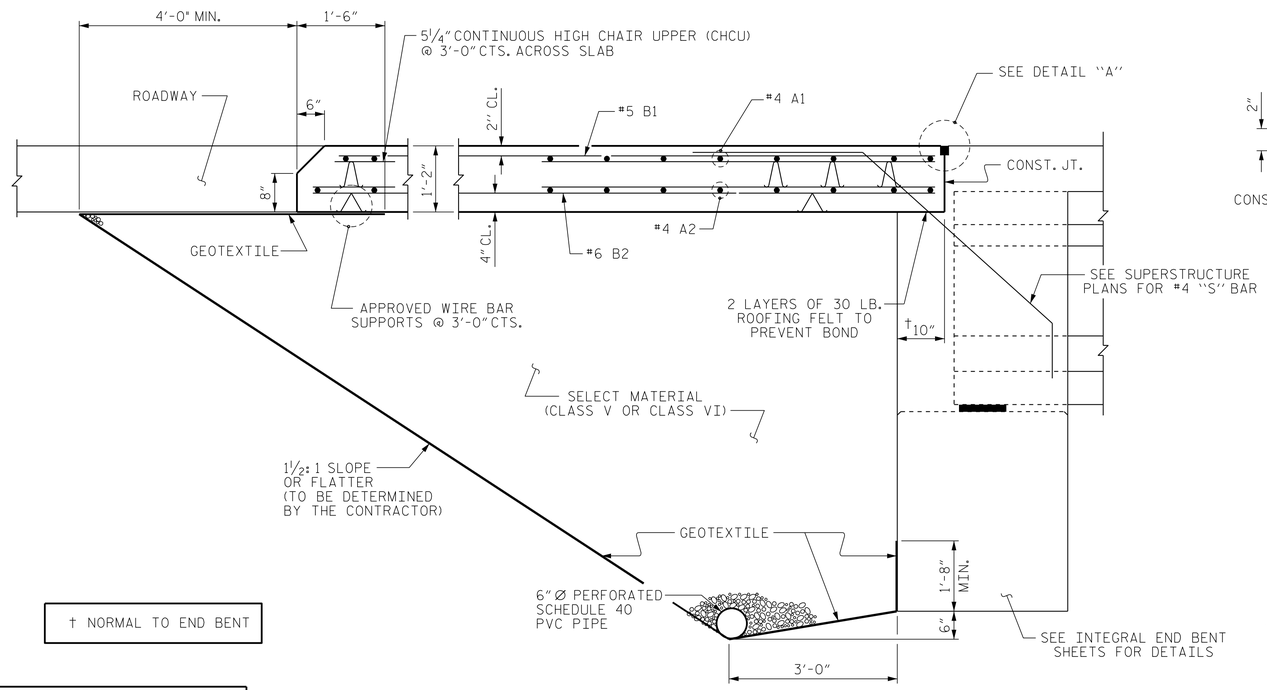

† NORMAL TO END BENT

SECTION THRU SLAB

(TYPE I - STANDARD APPROACH FILL)

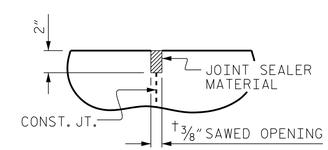

DETAIL "A"

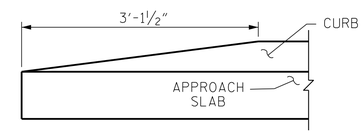

END OF CURB WITHOUT SHOULDER BERM GUTTER

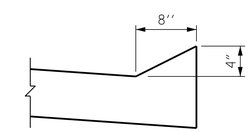

SECTION N-N

NOTES

APPROACH SLAB SHALL NOT BE CONSTRUCTED PRIOR TO COMPLETION OF THE BRIDGE DECK.

FOR BRIDGE APPROACH FILL INCLUDING GEOTEXTILE, 6" Ø DRAINAGE PIPE, AND SELECT MATERIAL, SEE ROADWAY PLANS.

GEOTEXTILE SHALL BE TYPE 1 IN ACCORDANCE WITH THE STANDARD SPECIFICATIONS SECTION 1056.

SELECT MATERIAL BACKFILL (CLASS V OR CLASS VI) SHALL BE IN ACCORDANCE WITH STANDARD SPECIFICATIONS SECTION 1016.

SELECT MATERIAL BACKFILL IS TO BE CONTINUOUS ALONG FILL FACE OF BACKWALL FROM OUTSIDE EDGE TO OUTSIDE EDGE OF APPROACH SLAB.

FOR THE 6" Ø DRAINAGE PIPE OUTLET(S), SEE ROADWAY STANDARD DRAWINGS.

AREA BETWEEN THE WINGWALL AND APPROACH SLAB SHALL BE GRADED TO DRAIN THE WATER AWAY FROM THE FILL FACE OF THE BRIDGE AND SHALL BE PAVED. SEE ROADWAY PLANS.

THE JOINT OPENING AT THE APPROACH SLAB/DECK INTERFACE SHALL BE SAWED NO MORE THAN 12 HOURS AFTER THE APPROACH SLAB IS CAST. THE JOINT SHALL BE CLEANED OF ALL DEBRIS BEFORE THE SEALANT IS APPLIED. THE JOINT SEALER MATERIAL SHALL CONFORM TO THE REQUIREMENTS OF SECTION 1028-3 OF THE STANDARD SPECIFICATIONS.

AT THE CONTRACTORS OPTION, "TYPE A - ALTERNATE APPROACH FILL" IN LIEU OF "TYPE I - STANDARD APPROACH FILL" MAY BE CONSTRUCTED AT NO ADDITIONAL COST TO THE DEPARTMENT. SEE SHEET 2 OF 2 FOR DETAILS AND NOTES.

BILL OF MATERIAL

FOR ONE APPROACH SLAB (2 REQ'D)

BAR	NO.	SIZE	TYPE	LENGTH	WEIGHT
* A1	52	#4	STR	24'-7"	854
A2	52	#4	STR	24'-6"	851
* B1	95	#5	STR	24'-2"	2395
B2	95	#6	STR	24'-8"	3520
REINFORCING STEEL				LBS.	4371
* EPOXY COATED REINFORCING STEEL				LBS.	3249
CLASS AA CONCRETE				C.Y.	51.1

SPLICE LENGTHS

BAR SIZE	EPOXY COATED	UNCOATED
#4	2'-0"	1'-9"
#5	2'-6"	2'-2"
#6	3'-10"	2'-7"

PROJECT NO. R-2582A

NORTHAMPTON COUNTY

STATION: 192+85.76 -L-

SHEET 1 OF 2

ENGINEER OF RECORD:

NORTH CAROLINA PROFESSIONAL SEAL 37400 ENGINEER

A08AA00C0D

2/1/2019

WETHERILL ENGINEERING

1223 Jones Franklin Rd.
Raleigh, N.C. 27606
Bus: 919 851 8077
Fax: 919 851 8107
LICENSE NO. F-0377

STATE OF NORTH CAROLINA
DEPARTMENT OF TRANSPORTATION
RALEIGH

STANDARD

BRIDGE APPROACH SLAB FOR INTEGRAL ABUTMENT WITH FLEXIBLE PAVEMENT (RIGHT LANE)

REVISIONS						SHEET NO.
NO.	BY:	DATE:	NO.	BY:	DATE:	S4-37
1			3			TOTAL SHEETS
2			4			38

DOCUMENT NOT CONSIDERED FINAL UNLESS ALL SIGNATURES COMPLETED

ASSEMBLED BY : D. HODGE		DATE :	10/18
CHECKED BY : G.M. GILLAND		DATE :	11/18
DRAWN BY : TLA 10/05	REV. 12/21/11		MAA/GM
CHECKED BY : GM 5/06	REV. 6/13		MAA/GM
	REV. 12/17		MAA/THC

P:\2018\18127.02 R-2582A\Structures\Revision (Site 2)\Site 2\DGN\RIGHT LANE\R2582A_SMU_ AS_650129rev.dgn
2/1/2019 8:10:59 AM

STD. NO. BAS5 (SHT 1a)

DocuSign Envelope ID: 817B1D73-88BA-49A0-9F22-45781A03197E

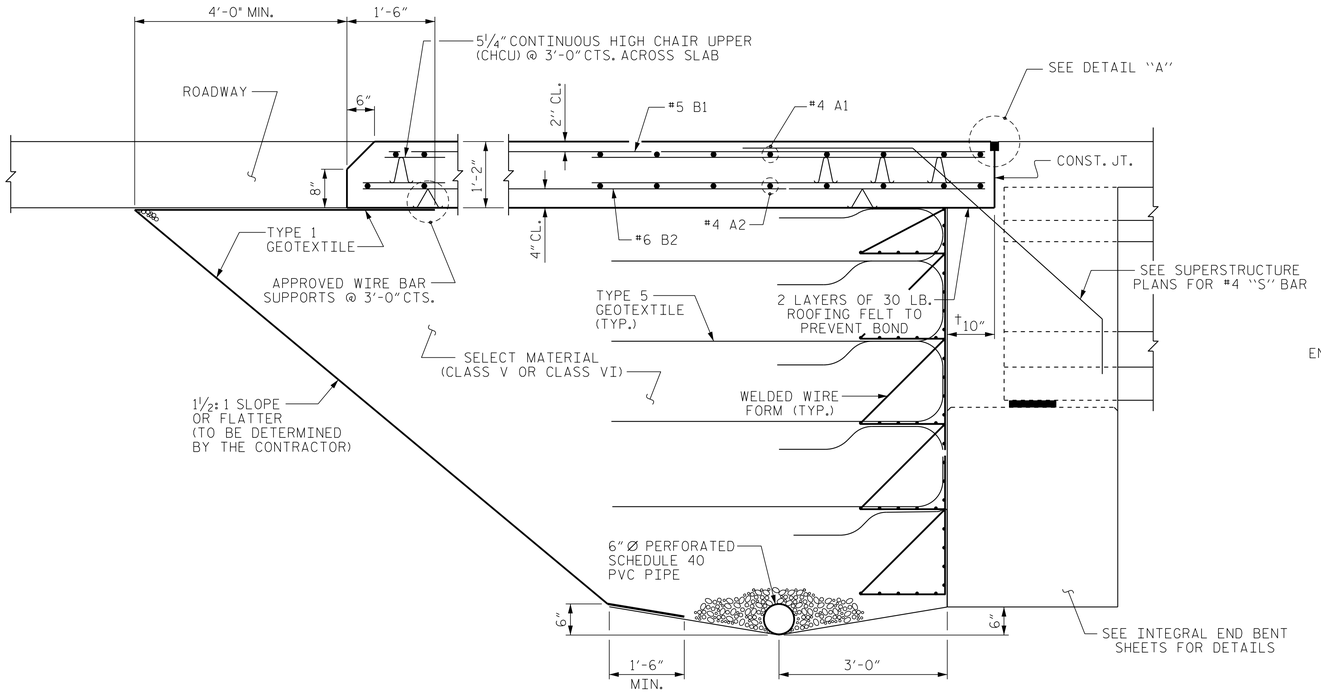

SECTION THRU SLAB

(TYPE A - ALTERNATE APPROACH FILL)

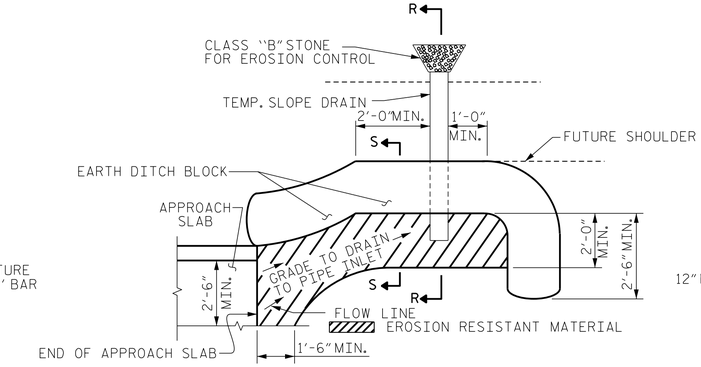

NOTE: IMMEDIATELY AFTER THE CONSTRUCTION OF THE APPROACH SLAB, THE CONTRACTOR SHALL PROVIDE TEMPORARY BERM AND SLOPE DRAIN. CONTRACTOR SHALL GRADE TO PIPE INLET AND PROVIDE EROSION RESISTANT MATERIAL AS SHOWN. THE EROSION RESISTANT MATERIAL SHALL BE EITHER 1) ASPHALT PLANT MIX, TYPE 1 OR TYPE 2, MIN. 2" DEPTH, 2) EROSION CONTROL MAT, OR 3) CONCRETE, AS DIRECTED BY THE ENGINEER. THE SLOPE DRAIN SHALL CONSIST OF A NON-PERFORATED TEMPORARY DRAINAGE PIPE, 12 INCHES IN DIAMETER.

PLAN VIEW

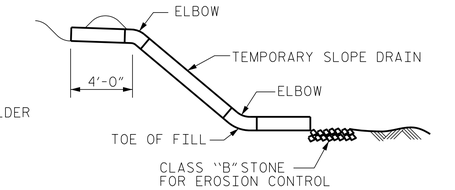

SECTION R-R

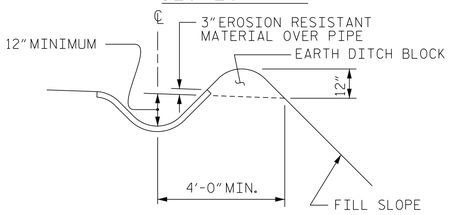

SECTION S-S

TEMPORARY BERM AND SLOPE DRAIN DETAILS

(TO BE USED WHEN SHOULDER BERM GUTTER IS REQUIRED)

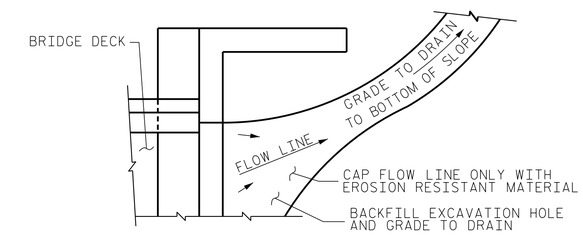

NOTE: IF THE APPROACH SLAB IS NOT CONSTRUCTED IMMEDIATELY AFTER THE BACKFILLING OF THE END BENT EXCAVATION, GRADE TO DRAIN TO THE BOTTOM OF THE SLOPE AND PROVIDE EROSION RESISTANT MATERIAL, SUCH AS FIBERGLASS ROVING OR AS DIRECTED BY THE ENGINEER TO PREVENT SOIL EROSION AND TO PROTECT THE AREA ADJACENT TO THE STRUCTURE. THE CONTRACTOR WILL BE REQUIRED TO REMOVE THESE MATERIALS PRIOR TO CONSTRUCTION OF THE APPROACH SLAB.

TEMPORARY DRAINAGE DETAIL

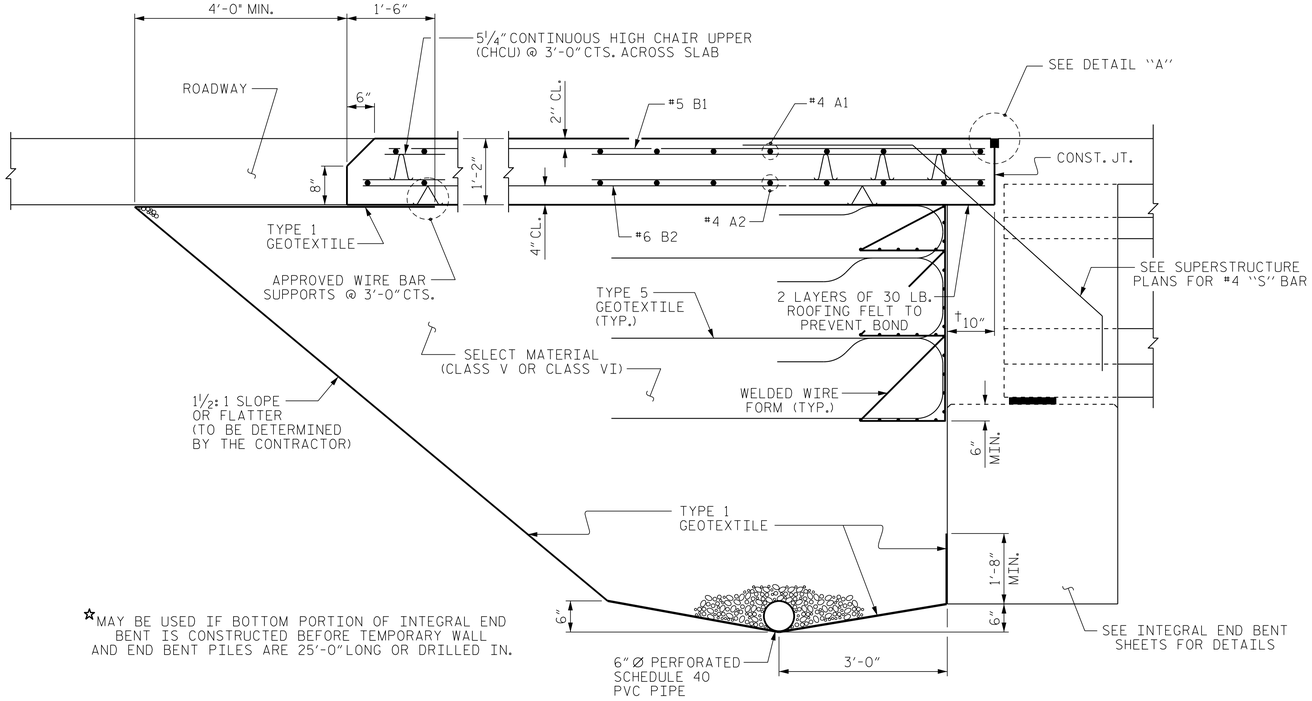

☆MAY BE USED IF BOTTOM PORTION OF INTEGRAL END BENT IS CONSTRUCTED BEFORE TEMPORARY WALL AND END BENT PILES ARE 25'-0" LONG OR DRILLED IN.

SECTION THRU SLAB

☆(TYPE A - ALTERNATE APPROACH FILL)

NOTES

APPROACH SLAB SHALL NOT BE CONSTRUCTED PRIOR TO COMPLETION OF THE BRIDGE DECK.

FOR TEMPORARY GEOTEXTILE WALL INCLUDING GEOTEXTILE, 6" Ø DRAINAGE PIPE, WELDED WIRE FORM, AND SELECT MATERIAL, SEE ROADWAY PLANS.

GEOTEXTILE (TYPE 1 OR TYPE 5) SHALL BE IN ACCORDANCE WITH THE STANDARD SPECIFICATIONS SECTION 1056.

SELECT MATERIAL BACKFILL (CLASS V OR CLASS VI) SHALL BE IN ACCORDANCE WITH STANDARD SPECIFICATIONS SECTION 1016.

SELECT MATERIAL BACKFILL IS TO BE CONTINUOUS ALONG FILL FACE OF BACKWALL FROM OUTSIDE EDGE TO OUTSIDE EDGE OF APPROACH SLAB.

FOR THE 6" Ø DRAINAGE PIPE OUTLET(S), SEE ROADWAY STANDARD DRAWINGS.

AREA BETWEEN THE WINGWALL AND APPROACH SLAB SHALL BE GRADED TO DRAIN THE WATER AWAY FROM THE FILL FACE OF THE BRIDGE AND SHALL BE PAVED. SEE ROADWAY PLANS.

THE JOINT OPENING AT THE APPROACH SLAB/DECK INTERFACE SHALL BE SAWED NO MORE THAN 12 HOURS AFTER THE APPROACH SLAB IS CAST. THE JOINT SHALL BE CLEANED OF ALL DEBRIS BEFORE THE SEALANT IS APPLIED. THE JOINT SEALER MATERIAL SHALL CONFORM TO THE REQUIREMENTS OF SECTION 1028-3 OF THE STANDARD SPECIFICATIONS.

PROJECT NO. R-2582A
NORTHAMPTON COUNTY
STATION: 192+85.76 -L-

SHEET 2 OF 2

ENGINEER OF RECORD:
NORTH CAROLINA PROFESSIONAL SEAL 37400 ENGINEER
GREGORY M. GILLAND
AUDIGRAPH
2/1/2019

WETHERILL ENGINEERING
1223 Jones Franklin Rd.
Raleigh, N.C. 27606
Bus: 919 851 8077
Fax: 919 851 8107
LICENSE NO. F-0377

STATE OF NORTH CAROLINA
DEPARTMENT OF TRANSPORTATION
RALEIGH

STANDARD

BRIDGE APPROACH SLAB DETAILS

(RIGHT LANE)

REVISIONS								SHEET NO.
NO.	BY:	DATE:	NO.	BY:	DATE:			S4-38
1			3					TOTAL SHEETS
2			4					38

ASSEMBLED BY : D. HODGE		DATE : 10/18	
CHECKED BY : G.M. GILLAND		DATE : 11/18	
DRAWN BY : TLA 10/05	REV. 12/21/11	MAA/GM	
CHECKED BY : GM 5/06	REV. 6/13	MAA/GM	
	REV. 12/17	MAA/THC	

DOCUMENT NOT CONSIDERED FINAL UNLESS ALL SIGNATURES COMPLETED

STD. NO. BAS5 (SHT 1a)

P:\2018\18127.02 R-2582A\Structures\Revision (Site 2)\Site 2\DGN\RIGHT LANE\R2582A_SMU_ AS_650129rev.dgn
2/1/2019 8:11:17 AM

DocuSign Envelope ID: E71BEC2A-96B7-4F00-B96D-28C43A0519A3

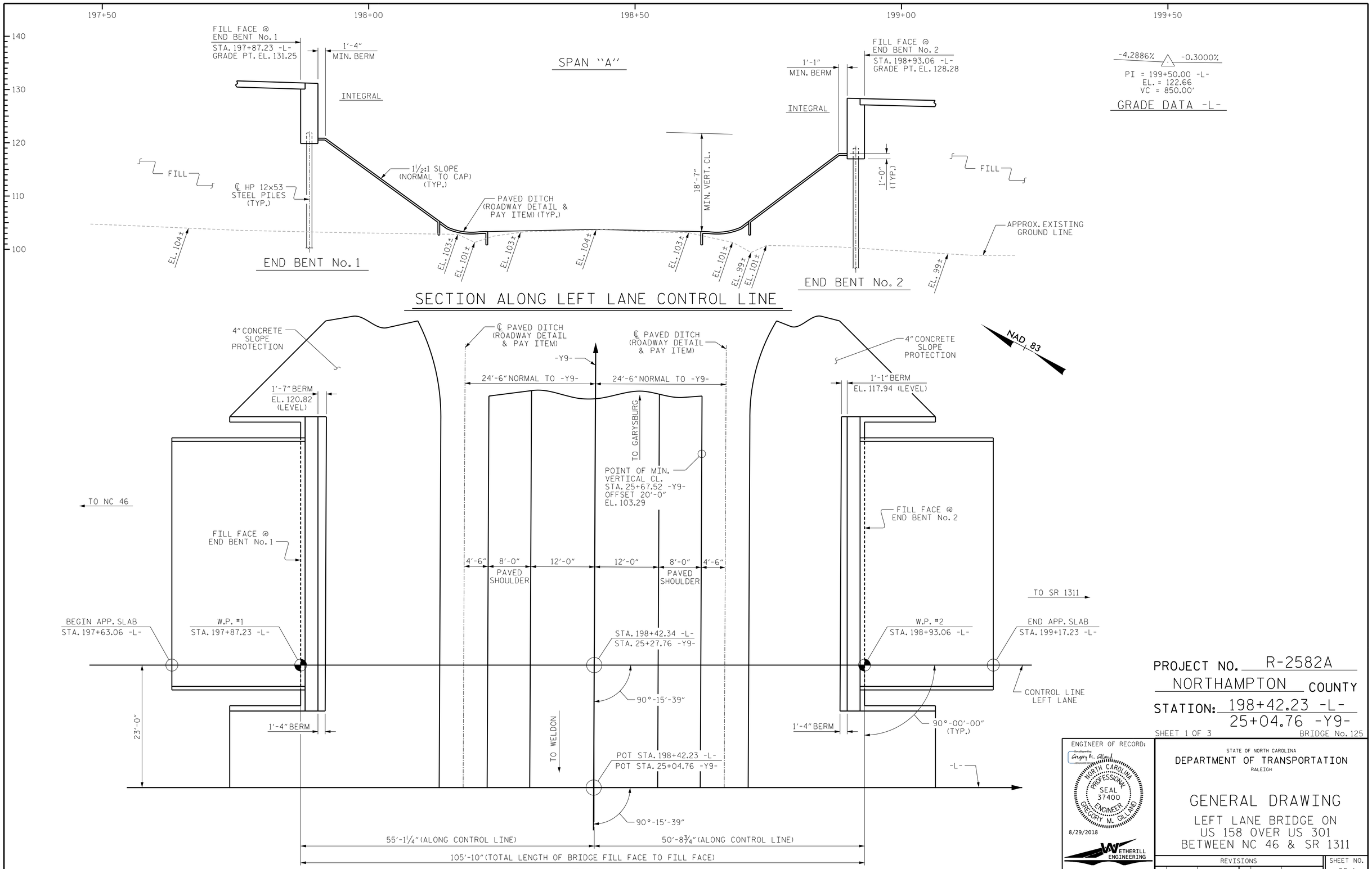

P:\2018\18127.02 R-2582A\Structures\Site 3\DGN\STR5_LT LN\R2582A_SMU_GD_650125.dgn
8/29/2018 8:48:13 AM

DRAWN BY : D. HODGE DATE : 4/18
CHECKED BY : G.M. GILLAND DATE : 5/18

DOCUMENT NOT CONSIDERED FINAL UNLESS ALL SIGNATURES COMPLETED

PROJECT NO. R-2582A
NORTHAMPTON COUNTY
STATION: 198+42.23 -L-
25+04.76 -Y9-

SHEET 1 OF 3 BRIDGE No. 125

ENGINEER OF RECORD:
Developed by: Gregory M. Gilland
NORTH CAROLINA PROFESSIONAL SEAL 37400 ENGINEER GREGORY M. GILLAND
8/29/2018

WETHERILL ENGINEERING
1223 Jones Franklin Rd.
Raleigh, N.C. 27606
Bus: 919 851 8077
Fax: 919 851 8107
LICENSE NO. F-0377

STATE OF NORTH CAROLINA
DEPARTMENT OF TRANSPORTATION
RALEIGH

GENERAL DRAWING
LEFT LANE BRIDGE ON US 158 OVER US 301 BETWEEN NC 46 & SR 1311

REVISIONS								SHEET NO.
NO.	BY:	DATE:	NO.	BY:	DATE:			S5-1
1			3					TOTAL SHEETS
2			4					26

DocuSign Envelope ID: E71BEC2A-96B7-4F00-B96D-28C43A0519A3

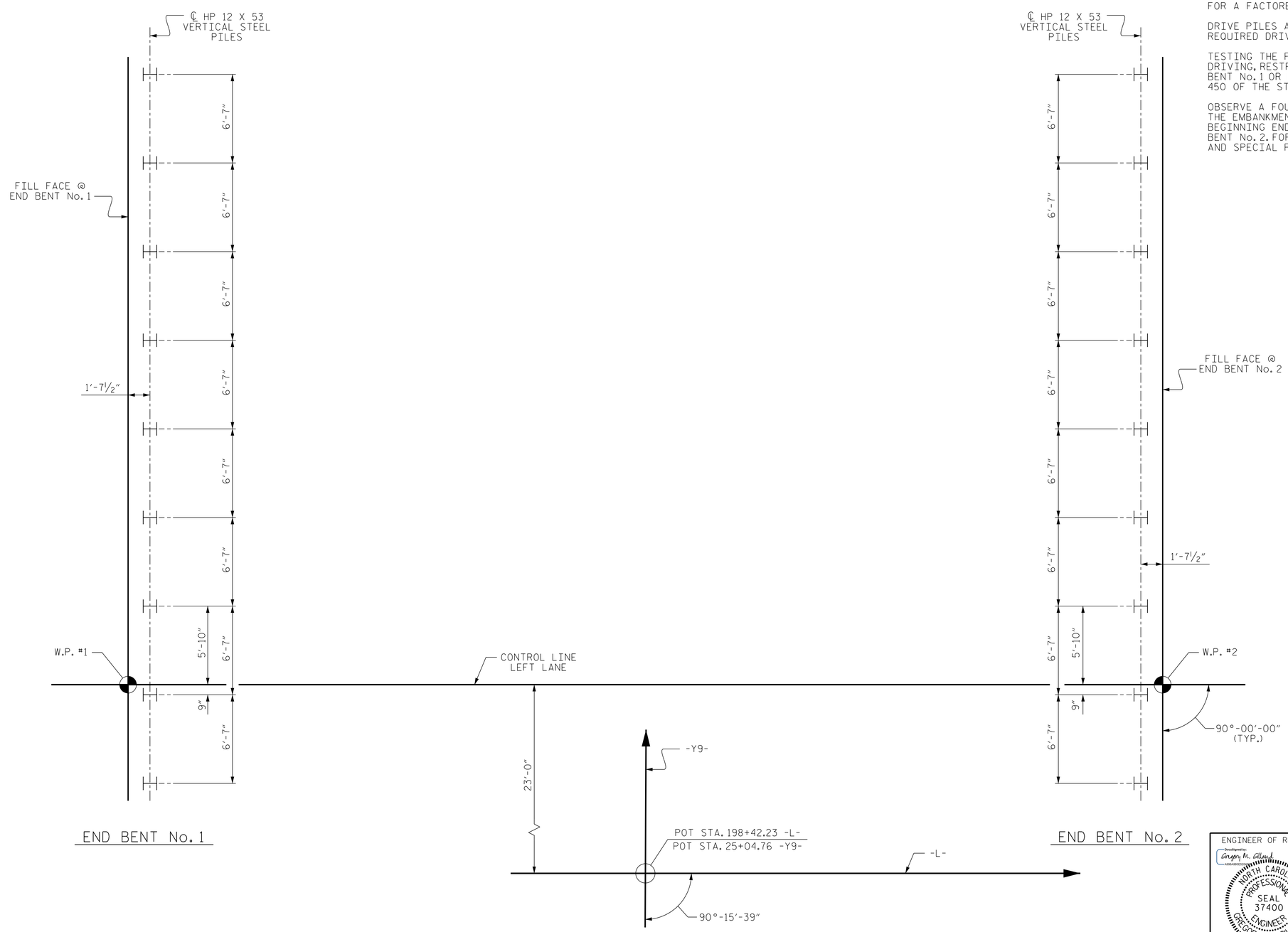

END BENT No. 1

END BENT No. 2

FOUNDATION LAYOUT

NOTES:

FOR PILES, SEE SECTION 450 OF THE STANDARD SPECIFICATIONS.

PILES AT END BENT No. 1 AND END BENT No. 2 ARE DESIGNED FOR A FACTORED RESISTANCE OF 120 TONS PER PILE.

DRIVE PILES AT END BENT No. 1 AND END BENT No. 2 TO A REQUIRED DRIVING RESISTANCE OF 200 TONS PER PILE.

TESTING THE FIRST PRODUCTION PILE WITH THE PDA DURING DRIVING, RESTRIKING, OR REDRIVING IS REQUIRED AT END BENT No. 1 OR END BENT No. 2. FOR PDA TESTING, SEE SECTION 450 OF THE STANDARD SPECIFICATIONS.

OBSERVE A FOUR MONTH WAITING PERIOD AFTER CONSTRUCTING THE EMBANKMENT TO WITHIN 2 FEET OF FINISHED GRADE BEFORE BEGINNING END BENT CONSTRUCTION AT END BENT No. 1 AND END BENT No. 2. FOR BRIDGE WAITING PERIODS, SEE ROADWAY PLANS AND SPECIAL PROVISIONS.

PROJECT NO. R-2582A
NORTHAMPTON COUNTY
STATION: 198+42.23 -L-

SHEET 2 OF 3

ENGINEER OF RECORD:
Gregory M. Gilland
NORTH CAROLINA PROFESSIONAL SEAL 37400 ENGINEER GREGORY M. GILLAND
8/29/2018

WETHERILL ENGINEERING
1223 Jones Franklin Rd.
Raleigh, N.C. 27606
Bus: 919 851 8077
Fax: 919 851 8107
LICENSE NO. F-0377

STATE OF NORTH CAROLINA
DEPARTMENT OF TRANSPORTATION
RALEIGH

GENERAL DRAWING
LEFT LANE BRIDGE ON
US 158 OVER US 301
BETWEEN NC 46 & SR 1311

REVISIONS						
NO.	BY:	DATE:	NO.	BY:	DATE:	
1			3			
2			4			

SHEET NO. S5-2
TOTAL SHEETS 26

DRAWN BY : D. HODGE DATE : 4/18
CHECKED BY : G.M. GILLAND DATE : 5/18

DOCUMENT NOT CONSIDERED FINAL UNLESS ALL SIGNATURES COMPLETED

P:\2018\18127.02_R-2582A\Structures\Site 3\DGN\STR5_LT_LWR2582A_SMU_FL_650125.dgn
8/29/2018 8:48:59 AM