This electronic collection of documents is provided for the convenience of the user and is Not a Certified Document –

The documents contained herein were originally issued and sealed by the individuals whose names and license numbers appear on each page, on the dates appearing with their signature on that page.
This file or an individual page shall not be considered a certified document.

PROJECT REFERENCE NO.	SHEET NO.
R-2582A	E1

DOCUMENT NOT CONSIDERED FINAL UNLESS ALL SIGNATURES COMPLETED

NORTH CAROLINA PROFESSIONAL SEAL 022582 ENGINEER PAUL KI-BUN CHAN

DocuSigned by: Paul Chan 3/4/2019
E83C4985EEEE4A2...

PLANS AND DETAILS FOR PROPOSED LIGHTING /ELECTRICAL CONSTRUCTION

△ NOTES

1. AT THESE LOCATIONS, PROVIDE ELECTRICAL DUCT IN ACCORDANCE WITH NEC REQUIREMENTS FOR AN APPROVED RACEWAY FOR ELECTRICAL CIRCUITS. SEE TABLE "C"
2. INSTALL ALL BORE PITS OUTSIDE THE CLEAR ZONE, AS DEFINED BY THE 2011 AASHTO ROADSIDE DESIGN GUIDE OR AS DIRECTED BY THE ENGINEER.
3. LOCATE ALL JUNCTION BOXES OUTSIDE CLEAR ZONE AND IN AN AREA UNLIKELY TO BE USED BY TRAFFIC.
4. LOCATE PROPOSED CONTROL SYSTEM IN AN AREA ACCESSIBLE FOR MAINTENANCE VEHICLES AND OUTSIDE OF CLEAR ZONE AS DEFINED BY THE 2011 AASHTO ROADSIDE DESIGN GUIDE.
5. INSTALL RIGID GALVANIZED CONDUIT (RGC) ABOVE GROUND, AND POLYVINYL CHLORIDE (PVC) SCHEDULE 40 CONDUIT UNDERGROUND, EXCEPT AS MODIFIED ON THESE PLANSHEETS OR IN APPLICABLE SECTIONS OF THE ROADWAY STANDARD DRAWINGS FOR THIS PROJECT.
6. ALL JUNCTION BOXES SHALL BE 18″ HIGH, UNLESS OTHERWISE NOTED.
7. CONTRACTOR SHALL RECORD THE GPS COORDINATES OF EACH JUNCTION BOX IN THE JUNCTION BOX SUMMARY, TABLE C. PROVIDE A COPY OF THE JUNCTION BOX SUMMARY WITH THESE COORDINATES TO THE LIGHTING ENGINEER DURING PROJECT INSPECTION.
8. POLE NUMBERING CONVENTION IS CONTROL SYSTEM-POLE #-CIRCUIT NUMBER (A-9-4).
9. OFFSET TWIN ARM POLE AND JUNCTION BOXES 10′ FROM CENTER OF DITCH LINE. MAINTAIN A MINIMUM OFFSET OF 5.5′ FROM FACE OF GUARDRAIL TO FACE OF POLE.
10. INSTALL POLE A-2-2 18′ PRIOR TO BEGINNING STATION -I95_RPC- STA 10+00 WITH OFFSET 50′ FROM EOT.
11. INSTALL DUCT FOR BEST ALIGNMENT OF CIRCUITRY.

SCOPE OF WORK

PLACE ROADWAY LIGHTING SYSTEM INTO SERVICE BY PROVIDING AND INSTALLING LIGHT STANDARDS WITH LIGHT EMITTING DIODE LUMINAIRES, UNDERGROUND CIRCUITRY, CONTROL SYSTEM AND JUNCTION BOXES.

DESIGN CRITERIA

0.8 AVERAGE FOOTCANDLE ON TRAVEL LANES

4:1 AVERAGE TO MINIMUM UNIFORMITY RATIO ON TRAVEL LANES

0.3 MAXIMUM VEILING LUMINANCE

2018 AASHTO ROADWAY LIGHTING DESIGN GUIDE

2013 AASHTO STANDARD SPECIFICATIONS FOR STRUCTURAL SUPPORTS FOR HIGHWAY SIGNS, LUMINAIRES, AND TRAFFIC SIGNALS, 6TH EDITION AND LATEST INTERIM SPECIFICATIONS VALID AT THE TIME OF LETTING (HANDHOLE SHAFT DIAMETER REQUIREMENT AND HANDHOLE PLACEMENT REQUIREMENT WAIVED)

FATIGUE CATEGORY II SHALL BE USED IN DESIGN

DESIGN HIGH MOUNT SUPPORT FOR BASIC WIND SPEED OF 110 MPH

DESIGN HIGH MOUNT STANDARD FOUNDATION FOR BASIC WIND SPEED OF 130 MPH. ANY CONTRACTOR-DESIGNED SITE SPECIFIC FOUNDATION DESIGN SHALL BE DESIGNED FOR THE SAME WIND SPEED

2017 NATIONAL ELECTRICAL CODE

2011 AASHTO ROADSIDE DESIGN GUIDE

ROADWAY STANDARDS

THE FOLLOWING ROADWAY ENGLISH STANDARDS AS APPEAR IN "NCDOT ROADWAY STANDARD DRAWINGS", ROADWAY DESIGN UNIT-N.C. DEPARTMENT OF TRANSPORTATION RALEIGH, N.C., DATED JANUARY 2018 ARE APPLICABLE TO THIS PROJECT AND BY REFERENCE HEREBY ARE CONSIDERED A PART OF THESE PLANS:

STD NO.	TITLE
1401.01	HIGH MOUNT STANDARD
1404.01	LIGHT STANDARDS
1405.01	STANDARD FOUNDATION
1407.01	ELECTRIC SERVICE POLE AND LATERAL
1408.01	LIGHT CONTROL SYSTEM (USE ATTACHED DETAIL SHEET 1408D01 IN LIEU OF STANDARD DRAWING 1408.01, SHEETS 1 & 2)
1409.01	ELECTRICAL DUCT
1410.01	FEEDER CIRCUITS
1411.01	ELECTRICAL JUNCTION BOXES

ALL WORK SHALL BE IN CONFORMANCE WITH DIVISION 14 OF THE STANDARD SPECIFICATIONS FOR ROADS AND STRUCTURES, DATED JANUARY 2018.

LEGEND

120′ — PROPOSED 120′ HIGH MAST STANDARD W/ HM FOUNDATION, JUNCTION BOX & (8) HM LED LUMINAIRES. 560W MAX, 54,000 MIN. MAINTAINED DELIVERED LUMENS, TYPE V. MAXIMUM BUG RATING 5-0-5. SEE TABLE C, SHEET E1A.

100′ — PROPOSED 100′ HIGH MAST STANDARD W/ HM FOUNDATION, JUNCTION BOX & (6) HM LED LUMINAIRES 560W MAX, 54,000 MIN. MAINTAINED DELIVERED LUMENS, TYPE V. MAXIMUM BUG RATING 5-0-5. SEE TABLE C, SHEET E1A.

PROPOSED LIGHT STANDARD TYPE MTLT 45′ WITH 15′ TWIN ARMS. INCLUDES STANDARD FOUNDATION TYPE R1 OR R2, JUNCTION BOX & 285W MAX LED ROADWAY LUMINAIRE. IES DISTRIBUTION: TYPE II OR III AS REQUIRED. MAXIMUM BUG RATING 3-0-3.

PROPOSED CONTROL SYSTEM WITH JUNCTION BOX (CSxJB). BREAKER SIZE SHOWN IN LOAD SCHEDULE. SEE SHEET E2.

JB1 — PROPOSED ELECTRICAL JUNCTION BOX SEE DETAILS & TABLE C, SHEET E1A.

△1 — REFERENCE TO CORRESPONDING NOTE AS NUMBERED.

A1 6 — PROPOSED FEEDER CIRCUIT CONTROL SYSTEM(A), CIRCUIT(1) PLAN SYMBOL (6) SEE TABLE A, THIS SHEET.

3#1/0 USE 2″ — PROPOSED 30′ CLASS 4 SERVICE POLE AND LATERAL 3 #1/0 USE CONDUCTORS 2″ CONDUIT

PROPOSED ELECTRICAL DUCT SIZE 2″, 3″ OR 4″ TYPE (JA) OR (BD) LOCATION: SEE TABLE B, SHEET E1A.

2″, 3″ OR 4″ ELEC. DUCT JA & BD

TABLE "A"
CIRCUITRY CONDUCTOR CONDUIT TYPE & SIZE

PLAN SYMBOL	DESCRIPTION		CONTRACT ITEM
8	2 #8 Ø 1 #10G 1.5″ P	2 AWG SIZE 8 CONDUCTOR (BK & RD) 1 AWG SIZE 10 GROUNDING CONDUCTOR 1.5″ PVC CONDUIT	2 - 8 W/G FEEDER CIRCUIT IN 1.5″ CONDUIT
*8	2 #8 Ø 1 #10G	2 AWG SIZE 8 CONDUCTOR (BK & RD) 1 AWG SIZE 10 GROUNDING CONDUCTOR	2 - 8 W/G FEEDER CIRCUIT
6	2 #6 Ø 1 #8G 1.5″ P	2 AWG SIZE 6 CONDUCTOR (BK & RD) 1 AWG SIZE 8 GROUNDING CONDUCTOR 1.5″ PVC CONDUIT	2 - 6 W/G FEEDER CIRCUIT IN 1.5″ CONDUIT
*6	2 #6 Ø 1 #10G	2 AWG SIZE 6 CONDUCTOR (BK & RD) 1 AWG SIZE 8 GROUNDING CONDUCTOR	2 - 6 W/G FEEDER CIRCUIT
4	2 #4 Ø 1 #6G 1.5″ P	2 AWG SIZE 4 CONDUCTOR (BK & RD) 1 AWG SIZE 6 GROUNDING CONDUCTOR 1.5″ PVC CONDUIT	2 - 4 W/G FEEDER CIRCUIT IN 1.5″ CONDUIT
*4	2 #4 Ø 1 #6G	2 AWG SIZE 4 CONDUCTOR (BK & RD) 1 AWG SIZE 6 GROUNDING CONDUCTOR	2 - 4 W/G FEEDER CIRCUIT
2	2 #2 Ø 1 #4G 1.5″ P	2 AWG SIZE 2 CONDUCTOR (BK & RD) 1 AWG SIZE 4 GROUNDING CONDUCTOR 1.5″ PVC CONDUIT	2 - 2 W/G FEEDER CIRCUIT IN 1.5″ CONDUIT
*2	2 #2 Ø 1 #4G	2 AWG SIZE 2 CONDUCTOR (BK & RD) 1 AWG SIZE 4 GROUNDING CONDUCTOR	2 - 2 W/G FEEDER CIRCUIT

ABBREVIATIONS

BD	BURIED	PVC	PVC SCHEDULE 40 CONDUIT
LT	LIGHT	RGC	RIGID GALVANIZED STEEL CONDUIT
JA	JACKED	C	CONDUIT
MH	MOUNTING HEIGHT	CKT	CIRCUIT
Ø	PHASE	N	NEUTRAL
SER LAT	SERVICE LATERAL	G	GROUND
IGJB	IN GROUND JUNCTION BOX	HM	HIGH MAST
LED	LIGHT EMITTING DIODE	LSJB	LIGHT STANDARD JUNCTION BOX
HMJB	HIGH MAST JUNCTION BOX	CSJB	CONTROL SYSTEM JUNCTION BOX

COMPUTED BY: XH DATE: 03/01/19
CHECKED BY: PC DATE: 3/4/2019

01-MAR-2019 13:48
R:\Lighting\Electrical\Lighting Design\R2582A_L&E_dsn_PSH_E1.dgn
$$$$USERNAME$$$$

PROJECT REFERENCE NO.	SHEET NO.
R-2582A	E1A

DOCUMENT NOT CONSIDERED FINAL UNLESS ALL SIGNATURES COMPLETED

NORTH CAROLINA PROFESSIONAL SEAL 022582 ENGINEER PAUL KI-BUN CHAN

DocuSigned by: Paul Chan 3/4/2019
F82C4086E6E443...

TABLE "C" JUNCTION BOX SUMMARY (6)

CONTROL SYSTEM "A"															GPS LOCATION (7)
SHEET	LABEL	LOCATION AND OFFSET	IGJB SIZE			LSJB SIZE			HMJB SIZE			CSJB SIZE	BRJB SIZE	SWJB SIZE	LAT/LONG
			18"X12"	30"X17"	36"X24"	18"X12"	30"X17"	36"X24"	18"X12"	30"X17"	36"X24"	36"X24"	18"X12"	18"X12"	
E2	JBA1	-I95 RPD- STA. 13+63, 24' RT			X										
E2	A-1-1JB	10' FROM HIGH MAST A-1							X						
E2	JBA2	-L- STA. 21+54, 29' LT	X												
E2	JBA3	-I95 RPC- STA. 12+14, 169' LT	X												
E2	A-2-2JB	10' FROM HIGH MAST A-2							X						
E2	JBA4	ACROSS FROM A-2-2JB, IN MEDIAN	X												
E2	JBA5	265' NORTH OF JBA4, IN MEDIAN	X												
E2	A-3-2JB	5' FROM LIGHT STANDARD A-3				X									
E2	A-4-2JB	5' FROM LIGHT STANDARD A-4				X									
E2	JBA6	-I95 RPD- STA. 10+02, 94' RT			X										
E2	JBA7	ACROSS FROM JBA6 AND A-8-4JB, IN MEDIAN			X										
E2	A-5-3JB	5' FROM LIGHT STANDARD A-5				X									
E2	A-6-3JB	5' FROM LIGHT STANDARD A-6				X									
E2	A-7-3JB	5' FROM LIGHT STANDARD A-7				X									
E2	A-8-4JB	10' FROM HIGH MAST A-8							X						
E2	JBA8	-L- STA. 25+41, 138' RT	X												
E2	JBA9	-L- STA. 24+07, 44' LT	X												
E2	A-9-4JB	10' FROM HIGH MAST A-9							X						
E2	CSAJB	2' FROM CONTROL SYSTEM "A"										X			
		CSA TOTALS	6		3	5			4			1			

TABLE "B" ELECTRICAL DUCT SUMMARY (ESTIMATED LENGTH IN FEET)

			TYPE							
			JACKED (JA) FEET				BURIED (BD) FEET			
LOCATION	RACEWAY (1)	SHEET	SIZE 2"	SIZE 3"	SIZE 4"	SIZE 6"	SIZE 2"	SIZE 3"	SIZE 4"	SIZE 6"
-I95_RPD- STA. 13+63	CSA - JBA1	E2			40		80			
-L- STA. 21+54		E2		60						
BETWEEN A-2-2JB - JBA4		E2		70						
BETWEEN JBA6 AND JBA7	JBA6 - JBA7	E2			70		80			
BETWEEN JBA7 - A-8-4JB		E2		70						
	CSA TOTALS			200	110		160			

SEE SHEET "E1" FOR LEGEND & △ NOTES

COMPUTED BY: XH DATE: 03/01/19
CHECKED BY: PC DATE: 3/4/2019

02/03/98

01-MAR-2019 13:48
R:\Lighting\Electrical\Lighting Design\R2582A_L&E_dsn_PSH_E1.dgn
$$$$USERNAME$$$$

PROJECT REFERENCE NO.	SHEET NO.
R-2582A	E2

0 50 100

NORTH CAROLINA PROFESSIONAL SEAL 022582 ENGINEER PAUL KI-BUN CHAN

DocuSigned by: Paul Chan 3/4/2019

DOCUMENT NOT CONSIDERED FINAL UNLESS ALL SIGNATURES COMPLETED

LOAD SCHEDULE
US 46/I-95 INTERCHANGE RPD

1Ø, 3W, 240/480 VAC — CONTROL SYSTEM "A"

CIRCUIT ID	TWIN ARM 2 @ 285W MAX. LED	100' HIGH MAST W/ 6 560W MAX. LED LUMINAIRES	120' HIGH MAST W/ 8 560W MAX. LED LUMINAIRES	AMPS @ 480V	KW LOAD	BREAKER SIZE (AMPS)
A1			A-1	9.3	4.5	15
A2	A-3, A-4		A-2	11.7	5.6	15
A3	A-5, A-6, A-7			3.6	1.7	15
A4		A-8	A-9	16.3	7.8	20
SPARE						20
TOTAL	5	1	3	40.9	19.6	

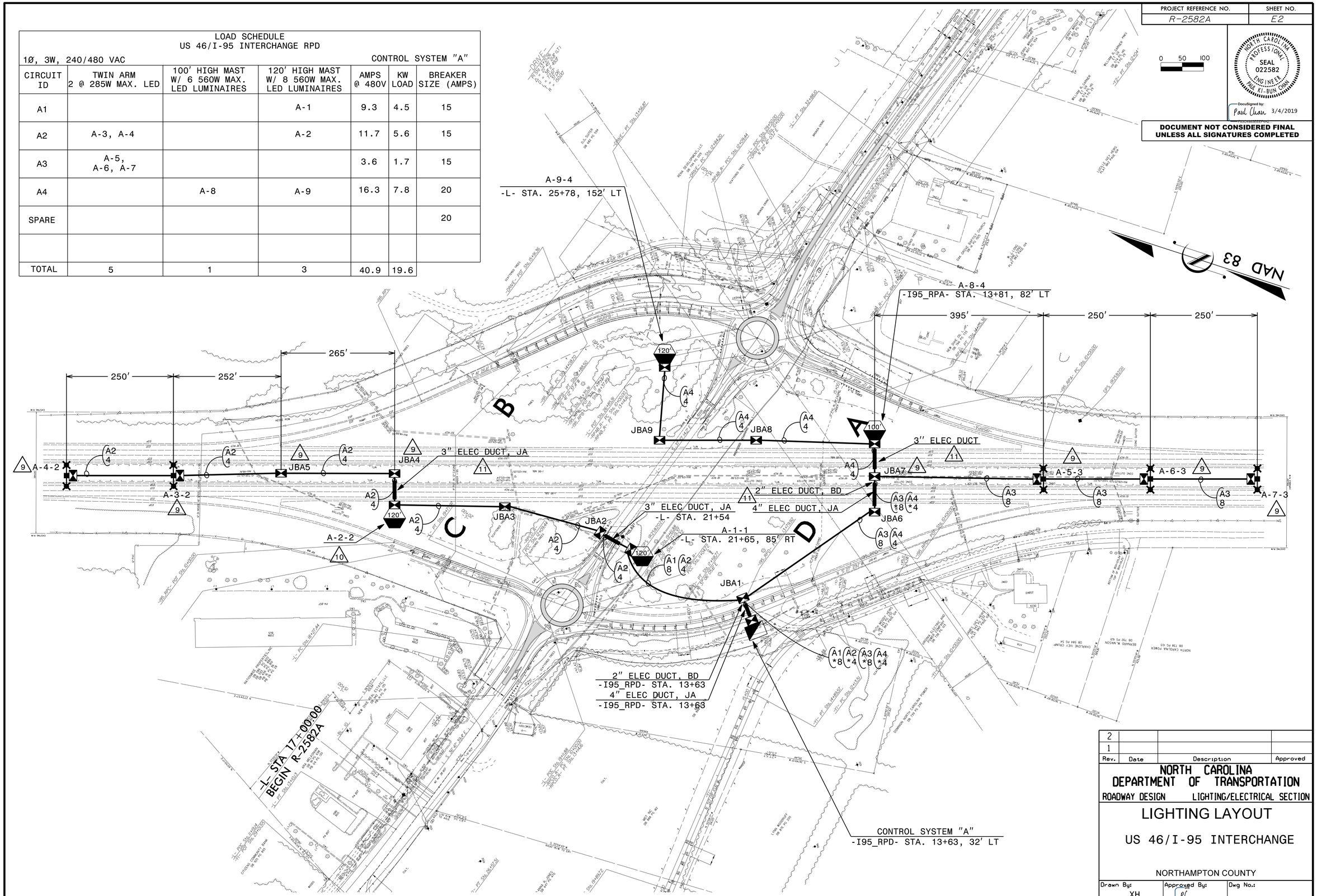

Rev.	Date	Description	Approved
2			
1			

NORTH CAROLINA DEPARTMENT OF TRANSPORTATION

ROADWAY DESIGN — LIGHTING/ELECTRICAL SECTION

LIGHTING LAYOUT

US 46/I-95 INTERCHANGE

NORTHAMPTON COUNTY

Drawn By:	Approved By:	Dwg No.:
XH	PC	

01-MAR-2019 13:51
R:\Lighting\Electrical\Lighting Design\R2582A_L&E_dsn_PSH_E2.dgn
xghan AT FDEA-292594

PROJECT REFERENCE NO.	SHEET NO.
R-2582A	E3

DOCUMENT NOT CONSIDERED FINAL UNLESS ALL SIGNATURES COMPLETED

NORTH CAROLINA PROFESSIONAL SEAL 022582 ENGINEER PAUL KI-SUN CHAN

DocuSigned by: Paul Chan 3/4/2019

USE FOR LIGHTING CONSTRUCTION ONLY

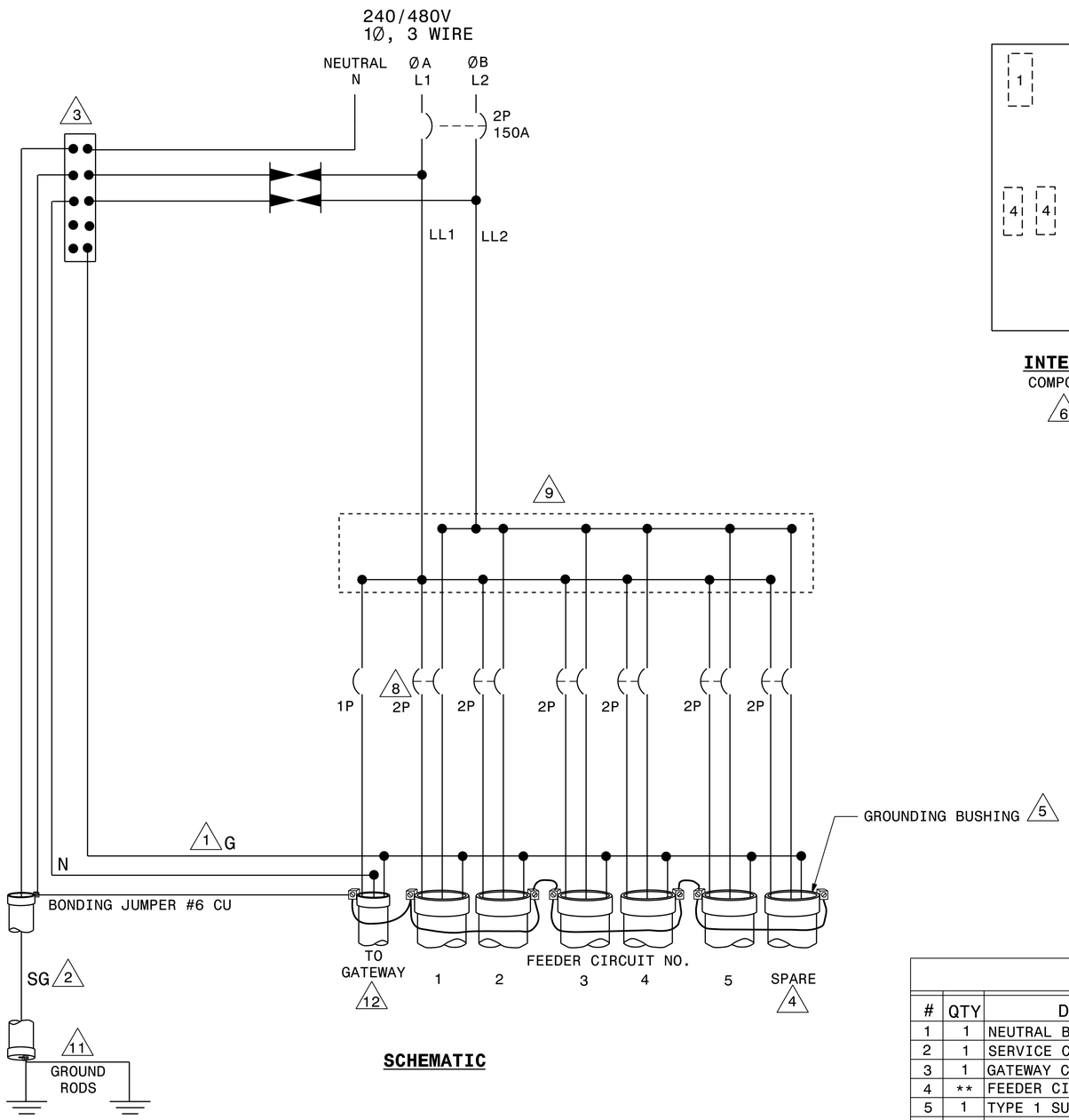

SCHEMATIC

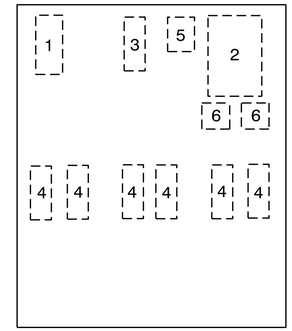

INTERIOR PANEL
COMPONENT LAYOUT
6 7 10

NOTES

1. EQUIPMENT GROUNDS (G) SHALL BE SIZED ACCORDING TO CIRCUIT DESCRIPTION. SEE PLANS.
2. SYSTEM GROUND (SG) SHALL BE CONTINUOUS FROM THE NEUTRAL BAR TO THE GROUNDING ELECTRODE (GROUND ROD).
3. THE NEUTRAL BAR SHALL BE BONDED TO THE PANEL.
4. INSTALL 6 FEEDER CIRCUIT CONDUITS AS SHOWN. UNUSED CONDUIT SHALL BE CAPPED IN THE CONTROL SYSTEM JUNCTION BOX.
5. INSTALL A GROUNDING BUSHING ON EACH METAL CONDUIT. CONNECT BONDING JUMPER AS REQUIRED BY NEC.
6. SEE STANDARD DRAWING 1408.01 SHEET 3 OF 3 FOR ENCLOSURE.
7. THE CONTROL SYSTEM MUST BE LABELED "SUITABLE FOR USE AS SERVICE EQUIPMENT." REFER TO STANDARD SPECIFICATION 1408-2 FOR OTHER REQUIREMENTS.
8. SEE PLANS FOR LIGHTING CIRCUIT BREAKER SIZES.
9. PROVIDE MULTI-TAP LOAD LUGS OR POWER DISTRIBUTION BLOCKS.
10. PROVIDE MANUFACTURER SUPPLIED MOUNTING BRACKETS OR SCREW STUDS PERMANENTLY ATTACHED TO THE BACK PANEL, FOR MOUNTING COMPONENTS.
11. PROVIDE AND INSTALL A CONDUIT CHOKE ON THE UNDERGROUND END OF THE ¾" RGS SYSTEM GROUND CONDUIT.
12. INSTALL #12 THWN CONDUCTOR FROM ENCLOSURE TO GATEWAY.

COMPONENT LIST

#	QTY	DESCRIPTION	SPECIFICATIONS
1	1	NEUTRAL BAR	
2	1	SERVICE CIRCUIT BREAKER	2P, 480V, 150A
3	1	GATEWAY CIRCUIT BREAKER	1P, 240V, 15A
4	**	FEEDER CIRCUIT BREAKERS	2P, 480V, 50A MAX
5	1	TYPE 1 SURGE PROTECTION DEVICE	20,000A RATED
6	2	POWER DISTRIBUTION LUGS OR BLOCKS	
		MOUNTING BRACKETS OR SCREW STUDS	

**PROVIDE THE NUMBER OF BREAKERS SHOWN IN THE LOAD SCHEDULE ON THE PLANS. INCLUDE SPARE BREAKER AS WELL.

Rev.	Date	Description	Approved
2			
1			

NORTH CAROLINA DEPARTMENT OF TRANSPORTATION
ROADWAY DESIGN — LIGHTING/ELECTRICAL SECTION

CONTROL SYSTEM DETAILS

1408D01, SHEET 1
CONTROL SYSTEM SCHEMATIC

NORTHAMPTON COUNTY

Drawn By:	Approved By:	Dwg No.:
XH	PC	

01-MAR-2019 13:52
R:\Lighting\Electrical\Lighting Design\R2582A_L&E.dsn_PSH_E3.dgn
$$$$USERNAME$$$$

PROJECT REFERENCE NO.	SHEET NO.
R-2582A	E4

DOCUMENT NOT CONSIDERED FINAL UNLESS ALL SIGNATURES COMPLETED

NORTH CAROLINA PROFESSIONAL SEAL 022582 ENGINEER PAUL KI-BUN CHAN

DocuSigned by: Paul Chan 3/4/2019

USE FOR LIGHTING CONSTRUCTION ONLY

NOTES

1. CURRENT TRANSFORMER (CT) CABINET AND METER MAY BE MOUNTED ON SERVICE POLE OR BACK OF CONTROL ENCLOSURE.
2. SEE SECTION 1407 OF THE STANDARD SPECIFICATIONS FOR SERVICE POLE AND SERVICE LATERAL.
3. SEE PLANS FOR SIZE OF CONDUITS AND/OR ELECTRICAL DUCT.
4. STUB FEEDER CIRCUIT CONDUITS INTO JUNCTION BOX. CAP UNUSED CONDUITS. FEEDER CIRCUITS MUST BE MINIMUM 30″ BELOW GRADE
5. SEE SECTION 1411 OF THE STANDARD SPECIFICATIONS FOR JUNCTION BOX INSTALLATION.
6. ALL ABOVE GROUND CIRCUITRY TO BE INSTALLED IN RIGID GALVANIZED CONDUIT. UNDERGROUND FEEDER CIRCUITS TO BE INSTALLED IN SCH 40 PVC CONDUIT.
7. TOP OF GROUND ROD(S) SHALL BE NO MORE THAN FOUR INCHES BELOW GRADE TO ALLOW FOR EASE OF INSPECTION BY DEPARTMENT OF INSURANCE, OFFICE OF STATE FIRE MARSHAL PERSONNEL.
8. INSTALL A CONDUIT GROUND CHOKE AND BOND THE EQUIPMENT GROUNDING CONDUCTOR TO THE END OF THE ¾″ CONDUIT UNDERGROUND PER NEC ARTICLE 250.64E.
9. GROUNDING ELECTRODE CONDUCTOR ¾″ CONDUIT SHALL NOT TERMINATE BELOW THE CONCRETE FOUNDATION PAD.
10. STRAP GATEWAY TO 2″ RGC USING STEEL BANDS PREINSTALLED ON GATEWAY ENCLOSURE.

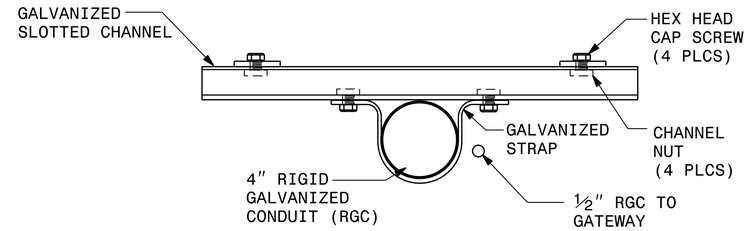

DETAIL"A"
MOUNTING HARDWARE

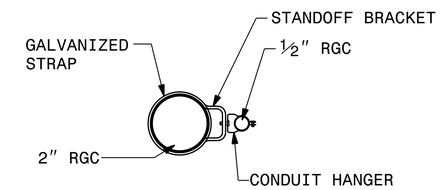

DETAIL"B"
STRAP WITH STANDOFF BRACKET & CONDUIT HANGER

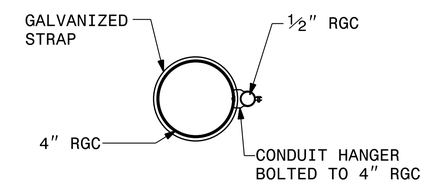

DETAIL"C"
STRAP WITH CONDUIT HANGER

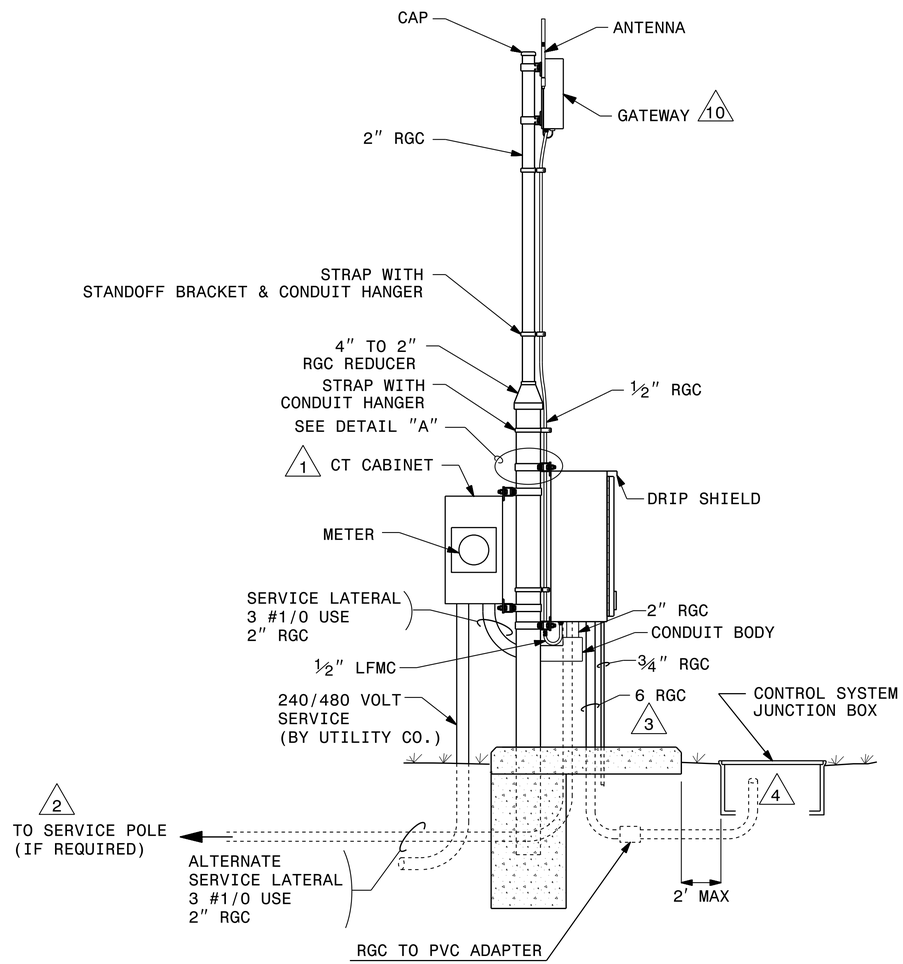

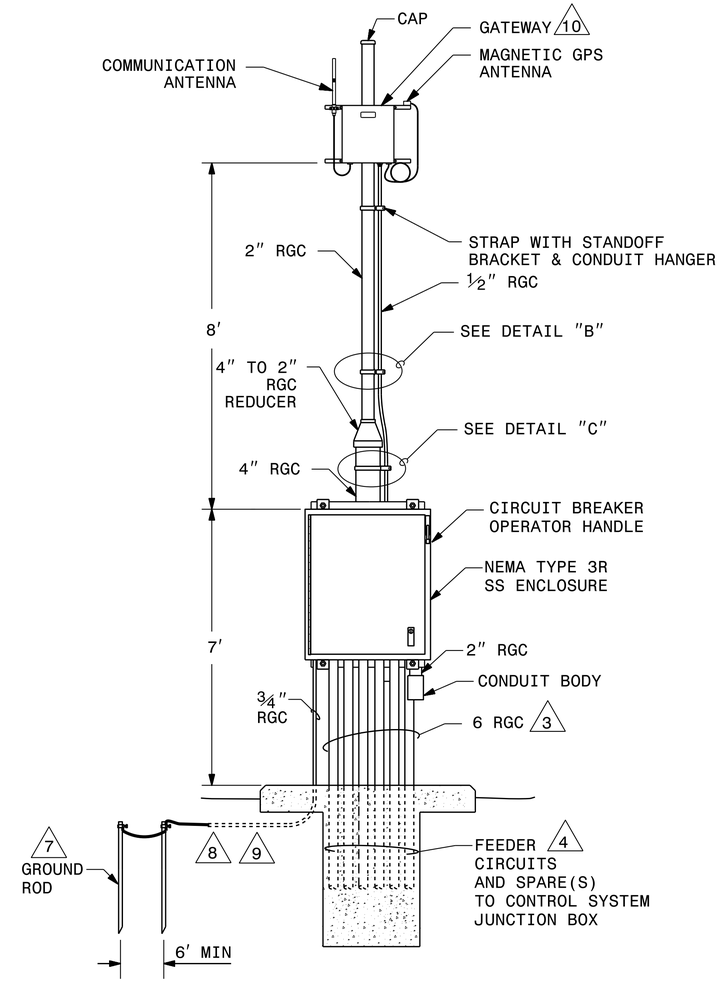

ASSEMBLY

Rev.	Date	Description	Approved
2			
1			

NORTH CAROLINA DEPARTMENT OF TRANSPORTATION
ROADWAY DESIGN — LIGHTING/ELECTRICAL SECTION

CONTROL SYSTEM DETAILS

1408D01, SHEET 2
CONTROL SYSTEM ASSEMBLY

NORTHAMPTION COUNTY

Drawn By:	Approved By:	Dwg No.:
XH	PC	

01-MAR-2019 13:53
R:\Lighting\Electrical\Lighting Design\R2582A_L&E_dsn_PSH_E4.dgn
$$$$USERNAME$$$$