This electronic collection of documents is provided for the convenience of the user and is Not a Certified Document –

The documents contained herein were originally issued and sealed by the individuals whose names and license numbers appear on each page, on the dates appearing with their signature on that page.
This file or an individual page shall not be considered a certified document.

DocuSign Envelope ID: 7B1144E2-6E31-4651-AC02-27EB853CA959

09/08/99

TIP PROJECT: R-2582A

CONTRACT: C204210

See Sheet 1-A For Index of Sheets
See Sheet 1-B For Conventional Symbols
See Sheet 1-C For Survey Control Sheets

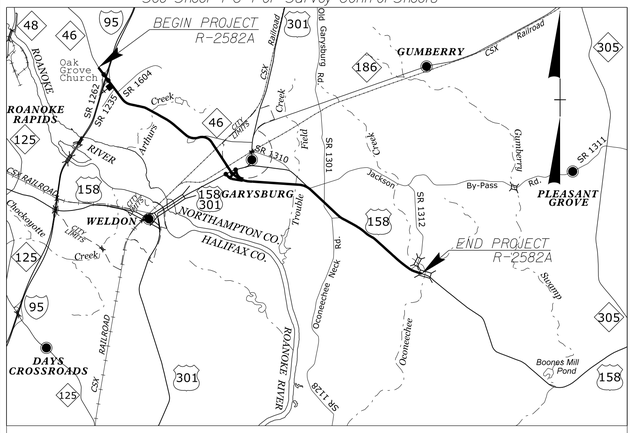

VICINITY MAP

STATE OF NORTH CAROLINA
DIVISION OF HIGHWAYS

NORTHAMPTON COUNTY

STATE	STATE PROJECT REFERENCE NO.	SHEET NO.	TOTAL SHEETS
N.C.	R-2582A	1	

STATE PROJ. NO.	F. A. PROJ. NO.	DESCRIPTION
34472.1.4		PE
34472.2.4		R/W, UTIL.
34472.3.2		CONSTRUCTION

LOCATION: US 158 FROM I-95/NC 46 IN ROANOKE RAPIDS TO SR 1312 (ST. JOHN CHURCH RD)

TYPE OF WORK: GRADING, DRAINAGE, PAVING, RETAINING WALLS, AND STRUCTURES.

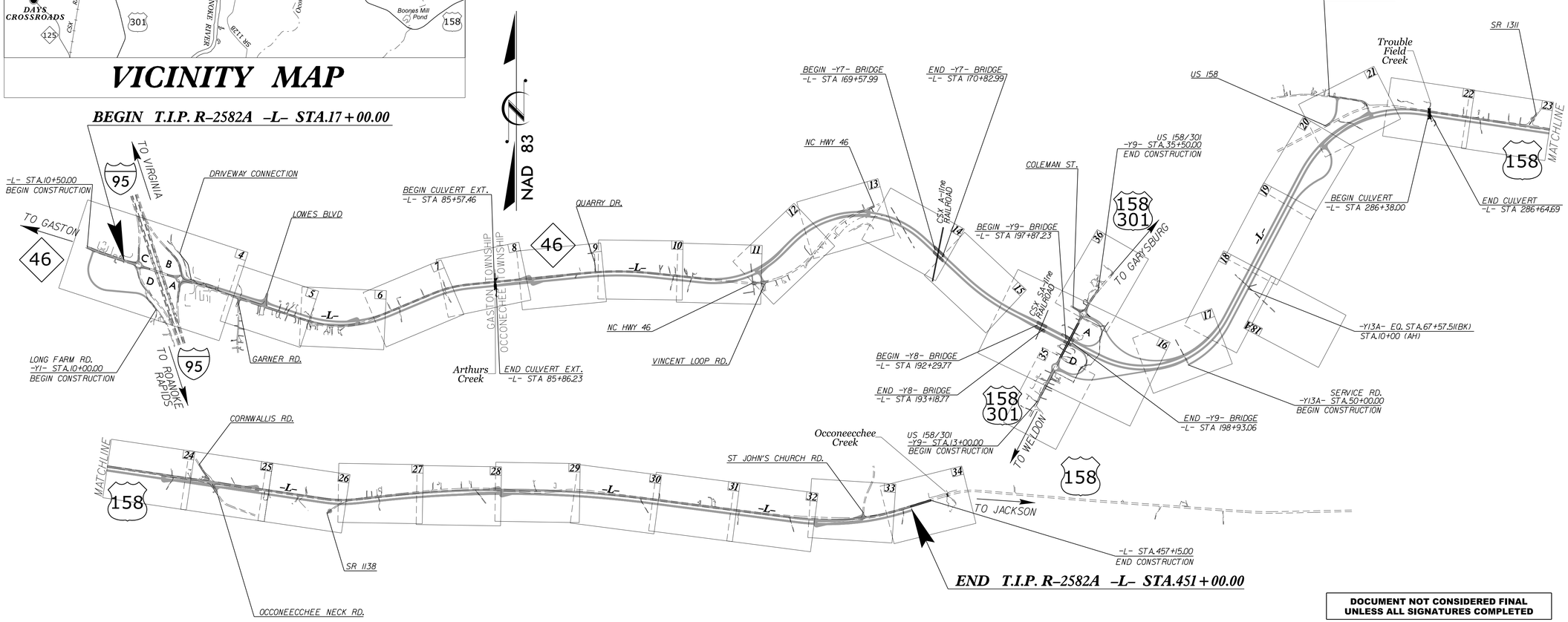

DOCUMENT NOT CONSIDERED FINAL UNLESS ALL SIGNATURES COMPLETED

PORTIONS OF THIS PROJECT HAVE PARTIAL AND/OR FULL CONTROL OF ACCESS.

GRAPHIC SCALES

50 25 0 50 100
PLANS

50 25 0 50 100
PROFILE (HORIZONTAL)

10 5 0 10 20
PROFILE (VERTICAL)

DESIGN DATA

ADT 2019 = 6400
ADT 2039 = 8418
K = 11 %
D = 60 %
T = 21 % *
V = 70 MPH
* TTST =14 DUAL=7
FUNC CLASS =
EXPRESSWAY
STATEWIDE TIER

PROJECT LENGTH

LENGTH ROADWAY T.I.P. PROJECT R-2582A = 8.122 MILES
LENGTH STRUCTURE T.I.P. PROJECT R-2582A = 0.098 MILES
TOTAL LENGTH OF T.I.P. PROJECT R-2582A = 8.220 MILES

NICOLE M. HACKLER, PE
NCDOT CONTACT

Prepared in the Office of:
SUMMIT
DESIGN AND ENGINEERING SERVICES
FIRM NO. P-0339
504 Meadowland Drive
Hillsborough, NC 27278-8551
Voice: (919) 732-3883
Fax: (919) 732-6776
www.summitde.net

2018 STANDARD SPECIFICATIONS

RIGHT OF WAY DATE:
June 30, 2017

LETTING DATE:
July 16, 2019

BRANDON W. JOHNSON, PE
PROJECT ENGINEER

FAITH E. JAHNKE, PE
PROJECT DESIGN ENGINEER

HYDRAULICS ENGINEER

5/17/2019
DocuSigned by: Meme D. Buscemi
P.E.
SIGNATURE:
NORTH CAROLINA PROFESSIONAL SEAL 037863 ENGINEER MEME D. BUSCEMI

ROADWAY DESIGN ENGINEER

5/17/2019
DocuSigned by: Faith E. Jahnke
P.E.
SIGNATURE:
NORTH CAROLINA PROFESSIONAL SEAL 046981 ENGINEER FAITH E. JAHNKE

STATE OF NORTH CAROLINA DEPARTMENT OF TRANSPORTATION

17-MAY-2019 08:27
R2582A_Rdy_tsh.dgn
faith.jahnke

DocuSign Envelope ID: 16D6A1B5-7D99-4E70-A88B-28FE2A910EE8

8/17/99

PROJECT REFERENCE NO.	SHEET NO.
R-2582A	1A

ROADWAY DESIGN ENGINEER

5/8/2019

N. C. CAROLINA PROFESSIONAL SEAL 046981 ENGINEER FRITH E. JARVIS

DocuSigned by: Frith E. Jarvis

B0A2B5BCE7C8466...

DOCUMENT NOT CONSIDERED FINAL UNLESS ALL SIGNATURES COMPLETED

INDEX OF SHEETS

SHEET NUMBER	SHEET
1	TITLE SHEET
1A	INDEX OF SHEETS, GENERAL NOTES, AND STANDARD DRAWINGS
1B	CONVENTIONAL SYMBOLS
1C-1 THRU 1C-2	SURVEY CONTROL SHEETS
2A-1 THRU 2A-8	PAVEMENT SCHEDULE AND TYPICAL SECTIONS
2B-1	MEDIAN GRADE POINT TRANSITION
2B-2 THRU 2B-8	DETOURS AND RETAINING WALL ENVELOPE PLAN PROFILE SHEETS
2B-9 THRU 2B-17	INTERSECTION DETAIL SHEETS
2C-1 THRU 2C-6	DETAIL OF METHOD OF SHOULDER CONSTRUCTION DETAIL OF GUARDRAIL INSTALATION, DETAIL OF CONCRETE FLUME, DETAIL OF TYPE III BRIDGE APPROACH FILL, DETAIL OF COAL COMBUSTION PRODUCT PLACEMENT, POST & BOARD FENCE DETAIL
2G-1 THRU 2G-7	ROCK EMBANKMENT DETAIL, GROUND IMPROVEMENT DETAILS, STANDARD TEMPORARY SHORING, AND STANDARD TEMPORARY WALL
3B-1 THRU 3B-4	SUMMARIES OF EARTHWORK, PAVEMENT REMOVAL, BREAKING OF EXISTING ASPHALT PAVEMENT, SHOULDER BERM GUTTER, AND GUARDRAIL
3D-1 THRU 3D-14	DRAINAGE SUMMARIES
3G-1	GEOTECHNICAL SUMMARIES
3P-1 THRU 3P-2	PARCEL INDEX SHEETS
4 THRU 67	PLAN AND PROFILE SHEETS
TMP-1 THRU TMP-35	TRAFFIC MANAGEMENT PLANS
PMP-1 THRU PMP-34	PAVEMENT MARKING PLANS
E-1 THRU E-4	ELECTRICAL PLANS
EC-1 THRU EC-69	EROSION CONTROL PLANS
SIGN-1 THRU SIGN-29	SIGNING PLANS
UC-1 THRU UC-57	UTILITIES CONSTRUCTION PLANS
UO-1 THRU UO-34	UTILITIES BY OTHERS PLANS
X-0	CROSS-SECTION INDEX
X-1A THRU X-1K	CROSS-SECTION SUMMARY SHEETS
X-1 THRU X-343	CROSS-SECTIONS (SHEET X-151 HAS BEEN OMITTED)
C1-1 THRU C1-10	CULVERT PLANS
C2-1 THRU C2-9	CULVERT PLANS
S1-1 THRU S1-27	STRUCTURES PLANS
S2-1 THRU S2-27	STRUCTURES PLANS
S3-1 THRU S3-38	STRUCTURES PLANS
S4-1 THRU S4-38	STRUCTURES PLANS
S5-1 THRU S5-26	STRUCTURES PLANS
S6-1 THRU S6-26	STRUCTURES PLANS
W-1 THRU W-10	WALL PLANS

GENERAL NOTES:

2018 SPECIFICATIONS
EFFECTIVE: 01-16-2018
REVISED:

GRADING AND SURFACING OR RESURFACING AND WIDENING:

THE GRADE LINES SHOWN DENOTE THE FINISHED ELEVATION OF THE PROPOSED SURFACING AT GRADE POINTS SHOWN ON THE TYPICAL SECTIONS. WHERE NO GRADE LINES ARE SHOWN, THE PROFILES SHOWN DENOTE THE TOP ELEVATION OF THE EXISTING PAVEMENT ALONG THE CENTER LINE OF SURVEY ON WHICH THE PROPOSED RESURFACING WILL BE PLACED. GRADE LINES MAY BE ADJUSTED BY THE ENGINEER IN ORDER TO SECURE A PROPER TIE-IN.

CLEARING:

CLEARING ON THIS PROJECT SHALL BE PERFORMED TO THE LIMITS ESTABLISHED BY METHOD III.

SUPERELEVATION:

ALL CURVES ON THIS PROJECT SHALL BE SUPERELEVATED IN ACCORDANCE WITH STD. NO. 225.05 USING THE RATE OF SUPERELEVATION AND RUNOFF SHOWN ON THE PLANS. SUPERELEVATION IS TO BE REVOLVED ABOUT THE GRADE POINTS SHOWN ON THE TYPICAL SECTIONS.

SHOULDER CONSTRUCTION:

ASPHALT, EARTH, AND CONCRETE SHOULDER CONSTRUCTION ON THE HIGH SIDE OF SUPERELEVATED CURVES SHALL BE IN ACCORDANCE WITH STD. NO. 560.02

SIDE ROADS:

THE CONTRACTOR WILL BE REQUIRED TO DO ALL NECESSARY WORK TO PROVIDE SUITABLE CONNECTIONS WITH ALL ROADS, STREETS, AND DRIVES ENTERING THIS PROJECT. THIS WORK WILL BE PAID FOR AT THE CONTRACT UNIT PRICE FOR THE PARTICULAR ITEMS INVOLVED.

SUBSURFACE DRAINS:

SUBSURFACE DRAINS SHALL BE CONSTRUCTED IN ACCORDANCE WITH STD. NO. 815.02 AT LOCATIONS DIRECTED BY THE ENGINEER.

DRIVEWAYS:

DRIVEWAYS SHALL BE CONSTRUCTED IN ACCORDANCE WITH STD. 848.02 USING 3 FOOT RADII OR RADII AS SHOWN ON THE PLANS. LOCATIONS OF DRIVES WILL BE AS SHOWN ON THE PLANS OR AS DIRECTED BY THE ENGINEER.

STREET TURNOUT:

STREET RETURNS SHALL BE CONSTRUCTED IN ACCORDANCE WITH STD. NO. 848.04 USING THE RADII NOTED ON PLANS.

GUARDRAIL:

THE GUARDRAIL LOCATIONS SHOWN ON THE PLANS MAY BE ADJUSTED DURING CONSTRUCTION AS DIRECTED BY THE ENGINEER. THE CONTRACTOR SHOULD CONSULT WITH THE ENGINEER PRIOR TO ORDERING GUARDRAIL MATERIAL.

TEMPORARY SHORING:

SHORING REQUIRED FOR THE MAINTENANCE OF TRAFFIC NOT SHOWN ON THE PLANS WILL BE PAID FOR AT THE CONTRACT PRICE FOR "TEMPORARY SHORING".

END BENTS:

THE ENGINEER SHALL CHECK THE STRUCTURE END BENT PLANS, DETAILS, AND CROSS-SECTION PRIOR TO SETTING OF THE SLOPE STAKES FOR THE EMBANKMENT OR EXCAVATION APPROACHING A BRIDGE.

UTILITIES:

UTILITY OWNERS ON THIS PROJECT ARE NORTHAMPTON COUNTY

DOMINION ENERGY, CENTURY LINK, PIEDMONT NATURAL GAS,

ROANOKE RAPIDS SANITARY DISTRICT, AND SPECTRUM.

ANY RELOCATION OF EXISTING UTILITIES WILL BE ACCOMPLISHED BY OTHERS, EXCEPT AS SHOWN ON THE PLANS.

RIGHT-OF-WAY MARKERS:

RIGHT-OF-WAY MARKERS ON THIS PROJECT SHALL BE PLACED BY OTHERS AND BY CONTRACT IN ACCORDANCE WITH DESIGNATED SYMBOLS.

EFF. 01-16-2018
REV.

2018 ROADWAY ENGLISH STANDARD DRAWINGS

The following Roadway Standards as appear in "Roadway Standard Drawings" Highway Design Branch - N. C. Department of Transportation - Raleigh, N. C., Dated January, 2018 are applicable to this project and by reference hereby are considered a part of these plans:

STD.NO.	TITLE
DIVISION 2 - EARTHWORK	
200.03	Method of Clearing - Method III
225.01	Guide for Grading Subgrade - Interstate and Freeway
225.02	Guide for Grading Subgrade - Secondary and Local
225.03	Deceleration and Acceleration Lanes
225.04	Method of Obtaining Superelevation - Two Lane Pavement
225.05	Method of Obtaining Superelevation - Divided Highways
225.06	Method of Grading Sight Distance at Intersections
225.07	Grading for False Cut at Grade Separations
225.09	Guide for Shoulder and Ditch Transition at Grade Separations
DIVISION 3 - PIPE CULVERTS	
300.01	Method of Pipe Installation
310.10	Driveway Pipe Construction
DIVISION 4 - MAJOR STRUCTURES	
422.01	Bridge Approach Fills - Type 1 Standard Approach Fill
422.03	Reinforced Bridge Approach Fills - Type A Alternate Approach Fill for Integral Abutment
DIVISION 5 - SUBGRADE, BASES AND SHOULDERS	
560.01	Method of Shoulder Construction - High Side of Superelevated Curve - Method I
560.02	Method of Shoulder Construction - High Side of Superelevated Curve - Method II
DIVISION 6 - ASPHALT BASES AND PAVEMENTS	
610.03	Guide for Paving Shoulders Under Bridges - Method III
654.01	Pavement Repairs
DIVISION 8 - INCIDENTALS	
806.03	Concrete Contol of Access Marker
815.02	Subsurface Drain
816.04	Markers for Drainage Structure and Concrete Pad
838.01	Concrete Endwall for Single and Double Pipe Culverts - 15" thru 48" Pipe 90 Skew
838.05	Concrete 'L' Endwall for Single Pipe Culverts - 15" thru 48" Pipe
838.11	Brick Endwall for Single and Double Pipe Culverts - 15" thru 48" Pipe 90 Skew
838.15	Brick 'L' Endwall for Single Pipe Culverts - 15" thru 48" Pipe
838.21	Reinforced Concrete Endwall - for Single 54" Pipe 90 Skew
838.39	Reinforced Concrete Endwall - for Single 72" Pipe 90 Skew
838.45	Notes for Reinforced Concrete Endwall - Std. Dwg 838.21 thru 838.40
838.69	Reinforced Brick Endwall - for Single 72" Pipe 90 Skew
838.75	Notes for Reinforced Brick Endwall - Std. Dwg 838.51 thru 838.70
838.80	Precast Endwalls - 12" thru 72" Pipe 90 Skew
840.00	Concrete Base Pad for Drainage Structures
840.01	Brick Catch Basin - 12" thru 54" Pipe
840.02	Concrete Catch Basin - 12" thru 54" Pipe
840.03	Frame, Grates and Hood - for Use on Standard Catch Basin
840.14	Concrete Drop Inlet - 12" thru 30" Pipe
840.15	Brick Drop Inlet - 12" thru 30" Pipe
840.16	Drop Inlet Frame and Grates - for use with Std. Dwg 840.14 and 840.15
840.17	Concrete Grated Drop Inlet Type 'A' - 12" thru 72" Pipe
840.18	Concrete Grated Drop Inlet Type 'B' - 12" thru 36" Pipe
840.19	Concrete Grated Drop Inlet Type 'D' - 12" thru 36" Pipe
840.20	Frames and Wide Slot Flat Grates
840.22	Frames and Wide Slot Sag Grates
840.24	Frames and Narrow Slot Sag Grates
840.25	Anchorage for Frames - Brick or Concrete or Precast
840.26	Brick Grated Drop Inlet Type 'A' - 12" thru 72" Pipe
840.27	Brick Grated Drop Inlet Type 'B' - 12" thru 36" Pipe
840.28	Brick Grated Drop Inlet Type 'D' - 12" thru 36" Pipe
840.29	Frames and Narrow Slot Flat Grates
840.35	Traffic Bearing Grated Drop Inlet - for Cast Iron Double Frame and Grates
840.36	Traffic Bearing Grated Drop Inlet - for Steel (840.37) Double Frame and Grates
840.37	Steel Grate and Frame
840.45	Precast Drainage Structure
840.46	Traffic Bearing Precast Drainage Structure
840.54	Manhole Frame and Cover
840.66	Drainage Structure Steps
840.71	Concrete and Brick Pipe Plug
840.72	Pipe Collar
846.01	Concrete Curb, Gutter and Curb & Gutter
846.04	Drop Inlet Installation in Shoulder Berm Gutter
848.02	Driveway Turnout - Radius Type
848.04	Street Turnout
852.01	Concrete Islands

08-MAY-2019 10:34
R:\Roadway\Proj\2582a_rdy_sht1.dgn
fjarvis

12/2/2016

PROJECT REFERENCE NO.	SHEET NO.
R-2582A	1B

STATE OF NORTH CAROLINA, DIVISION OF HIGHWAYS

CONVENTIONAL PLAN SHEET SYMBOLS

Note: Not to Scale

**S.U.E. = Subsurface Utility Engineering*

BOUNDARIES AND PROPERTY:

- State Line
- County Line
- Township Line
- City Line
- Reservation Line
- Property Line
- Existing Iron Pin — EIP
- Computed Property Corner
- Property Monument — ECM
- Parcel/Sequence Number — 123
- Existing Fence Line
- Proposed Woven Wire Fence
- Proposed Chain Link Fence
- Proposed Barbed Wire Fence
- Existing Wetland Boundary — WLB
- Proposed Wetland Boundary — WLB
- Existing Endangered Animal Boundary — EAB
- Existing Endangered Plant Boundary — EPB
- Existing Historic Property Boundary — HPB
- Known Contamination Area: Soil — S
- Potential Contamination Area: Soil — S
- Known Contamination Area: Water — W
- Potential Contamination Area: Water — W
- Contaminated Site: Known or Potential

BUILDINGS AND OTHER CULTURE:

- Gas Pump Vent or U/G Tank Cap
- Sign — S
- Well — W
- Small Mine
- Foundation
- Area Outline
- Cemetery
- Building
- School
- Church
- Dam

HYDROLOGY:

- Stream or Body of Water
- Hydro, Pool or Reservoir
- Jurisdictional Stream — JS
- Buffer Zone 1 — BZ 1
- Buffer Zone 2 — BZ 2
- Flow Arrow
- Disappearing Stream
- Spring
- Wetland
- Proposed Lateral, Tail, Head Ditch — FLOW
- False Sump

RAILROADS:

- Standard Gauge — CSX TRANSPORTATION
- RR Signal Milepost — MILEPOST 35
- Switch — SWITCH
- RR Abandoned
- RR Dismantled

RIGHT OF WAY & PROJECT CONTROL:

- Secondary Horiz and Vert Control Point
- Primary Horiz Control Point
- Primary Horiz and Vert Control Point
- Exist Permanent Easment Pin and Cap
- New Permanent Easement Pin and Cap
- Vertical Benchmark
- Existing Right of Way Marker
- Existing Right of Way Line
- New Right of Way Line — RW
- New Right of Way Line with Pin and Cap — RW
- New Right of Way Line with Concrete or Granite R/W Marker — RW
- New Control of Access Line with Concrete C/A Marker — CA
- Existing Control of Access — CA
- New Control of Access — CA
- Existing Easement Line — E
- New Temporary Construction Easement — E
- New Temporary Drainage Easement — TDE
- New Permanent Drainage Easement — PDE
- New Permanent Drainage / Utility Easement — DUE
- New Permanent Utility Easement — PUE
- New Temporary Utility Easement — TUE
- New Aerial Utility Easement — AUE

ROADS AND RELATED FEATURES:

- Existing Edge of Pavement
- Existing Curb
- Proposed Slope Stakes Cut — C
- Proposed Slope Stakes Fill — F
- Proposed Curb Ramp — CR
- Existing Metal Guardrail
- Proposed Guardrail
- Existing Cable Guiderail
- Proposed Cable Guiderail
- Equality Symbol
- Pavement Removal

VEGETATION:

- Single Tree
- Single Shrub
- Hedge
- Woods Line
- Orchard
- Vineyard — Vineyard

EXISTING STRUCTURES:

MAJOR:

- Bridge, Tunnel or Box Culvert — CONC
- Bridge Wing Wall, Head Wall and End Wall — CONC WW

MINOR:

- Head and End Wall — CONC HW
- Pipe Culvert
- Footbridge
- Drainage Box: Catch Basin, DI or JB — CB
- Paved Ditch Gutter
- Storm Sewer Manhole — S
- Storm Sewer — S

UTILITIES:

POWER:

- Existing Power Pole
- Proposed Power Pole
- Existing Joint Use Pole
- Proposed Joint Use Pole
- Power Manhole — P
- Power Line Tower
- Power Transformer
- U/G Power Cable Hand Hole
- H-Frame Pole
- U/G Power Line LOS B (S.U.E.*) — P
- U/G Power Line LOS C (S.U.E.*) — P
- U/G Power Line LOS D (S.U.E.*) — P

TELEPHONE:

- Existing Telephone Pole
- Proposed Telephone Pole
- Telephone Manhole — T
- Telephone Pedestal — T
- Telephone Cell Tower
- U/G Telephone Cable Hand Hole
- U/G Telephone Cable LOS B (S.U.E.*) — T
- U/G Telephone Cable LOS C (S.U.E.*) — T
- U/G Telephone Cable LOS D (S.U.E.*) — T
- U/G Telephone Conduit LOS B (S.U.E.*) — TC
- U/G Telephone Conduit LOS C (S.U.E.*) — TC
- U/G Telephone Conduit LOS D (S.U.E.*) — TC
- U/G Fiber Optics Cable LOS B (S.U.E.*) — T FO
- U/G Fiber Optics Cable LOS C (S.U.E.*) — T FO
- U/G Fiber Optics Cable LOS D (S.U.E.*) — T FO

WATER:

- Water Manhole — W
- Water Meter
- Water Valve
- Water Hydrant
- U/G Water Line LOS B (S.U.E*) — W
- U/G Water Line LOS C (S.U.E*) — W
- U/G Water Line LOS D (S.U.E*) — W
- Above Ground Water Line — A/G Water

TV:

- TV Pedestal — C
- TV Tower
- U/G TV Cable Hand Hole — HH
- U/G TV Cable LOS B (S.U.E.*) — TV
- U/G TV Cable LOS C (S.U.E.*) — TV
- U/G TV Cable LOS D (S.U.E.*) — TV
- U/G Fiber Optic Cable LOS B (S.U.E.*) — TV FO
- U/G Fiber Optic Cable LOS C (S.U.E.*) — TV FO
- U/G Fiber Optic Cable LOS D (S.U.E.*) — TV FO

GAS:

- Gas Valve
- Gas Meter
- U/G Gas Line LOS B (S.U.E.*) — G
- U/G Gas Line LOS C (S.U.E.*) — G
- U/G Gas Line LOS D (S.U.E.*) — G
- Above Ground Gas Line — A/G Gas

SANITARY SEWER:

- Sanitary Sewer Manhole
- Sanitary Sewer Cleanout
- U/G Sanitary Sewer Line — SS
- Above Ground Sanitary Sewer — A/G Sanitary Sewer
- SS Forced Main Line LOS B (S.U.E.*) — FSS
- SS Forced Main Line LOS C (S.U.E.*) — FSS
- SS Forced Main Line LOS D (S.U.E.*) — FSS

MISCELLANEOUS:

- Utility Pole
- Utility Pole with Base
- Utility Located Object
- Utility Traffic Signal Box — S
- Utility Unknown U/G Line LOS B (S.U.E.*) — ?UTL
- U/G Tank; Water, Gas, Oil
- Underground Storage Tank, Approx. Loc. — UST
- A/G Tank; Water, Gas, Oil
- Geoenvironmental Boring
- U/G Test Hole LOS A (S.U.E.*)
- Abandoned According to Utility Records — AATUR
- End of Information — E.O.I.

PROJECT REFERENCE NO.	SHEET NO.
R-2582A	IC-01

SURVEY CONTROL SHEET R-2582A

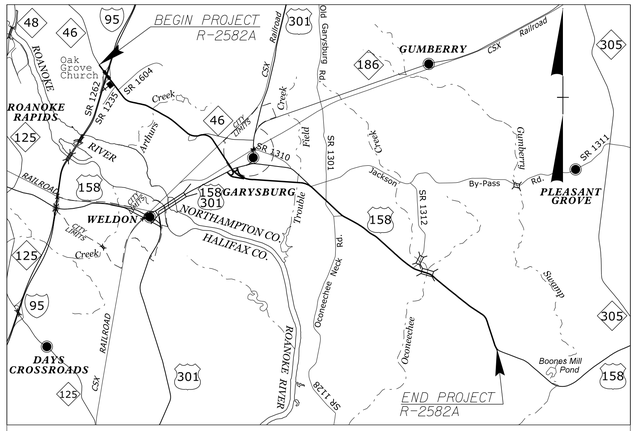

VICINITY MAP

BL

POINT	DESC.	NORTH	EAST	ELEVATION	L STATION	OFFSET
BL10	BL10	993142.7479	2407855.6703	131.91	13+85.23	33.37 LT
R258202	R258202	992479.3400	2408287.4490	147.16	21+74.96	20.00 RT
BL11	BL11	992000.8860	2408712.2272	141.34	28+15.78	19.42 LT
BL12	BL12	990895.5698	2409483.4937	125.80	41+61.39	60.51 RT
BL13	BL13	990144.3469	2410050.7170	127.79	51+01.05	63.12 RT
BL14	BL14	989597.2237	2410710.7185	127.51	59+41.86	50.47 RT
BL15	BL15	989417.6072	2411423.0785	126.74	66+70.40	18.08 LT
BL16	BL16	989205.0318	2412323.1468	115.26	75+95.02	1.18 LT
BL17	BL17	988880.4106	2413139.7545	77.25	84+70.91	53.88 LT
BLA18	BLA18	988330.3709	2414050.1039	102.04	95+33.85	15.95 LT
R258203	R258203	988057.0790	2414622.1250	115.24	101+66.48	55.34 LT
R258204	R258204	987442.6450	2415565.3860	144.56	112+81.06	79.65 LT
BL18	BL18	986756.1818	2416270.4703	131.15	122+62.28	17.49 LT
BL19	BL19	986052.2294	2417151.8856	118.66	132+90.82	278.15 RT
BL20	BL20	985931.7876	2417956.2971	113.62	139+85.42	456.64 RT
BL21	BL21	986201.7857	2418862.4778	120.80	150+35.64	111.29 RT
BL22	BL22	985580.2779	2419719.7526	134.94	161+49.77	7.26 RT
BL23	BL23	984822.3549	2419966.2377	151.89	169+52.46	4.01 RT
BL24	BL24	983962.8912	2420159.3333	149.62	178+33.30	1.74 RT
BL25	BL25	983164.5574	2420459.9423	123.49	186+87.23	6.41 RT
BL26	BL26	982897.1346	2420604.6334	104.87	189+91.18	3.56 RT
BL27	BL27	982658.4501	2420743.2538	117.88	192+67.01	6.58 LT
R258205	R258205	982175.7950	2421111.7990	100.24	198+66.27	104.95 LT
BL28	BL28	981535.9180	2421394.9511	96.62	205+67.31	48.90 LT
BL29	BL29	981437.5485	2421749.5517	106.03	208+91.44	273.47 LT
BL30	BL30	981052.4537	2422571.3571	107.32	220+16.76	320.25 LT
BL31	BL31	980889.9461	2423358.6645	107.20	228+88.93	59.68 LT
BL32	BL32	981229.9683	2424146.3838	105.86	237+51.09	7.76 LT
BL33	BL33	981607.2391	2424897.7592	108.84	245+91.77	5.09 RT
BL34	BL34	981839.7326	2425346.1797	84.57	250+96.88	6.25 RT
BL35	BL35	982145.2469	2425941.4535	111.15	257+65.96	10.55 RT
BL36	BL36	982461.6676	2426764.6598	115.11	266+53.97	1.05 LT
BL37	BL37	982545.3403	2427821.3228	107.52	276+61.07	191.05 LT

BL1

POINT	DESC.	NORTH	EAST	ELEVATION	L STATION	OFFSET
BL1106	BL1106	982700.0384	2426747.7219	118.01	266+71.11	239.33 LT
EQBL37		982545.3403	2427821.3228	107.54	276+61.07	191.05 LT

BL2

POINT	DESC.	NORTH	EAST	ELEVATION	L STATION	OFFSET
EQ258209		974594.9460	2437555.0170	95.00	402+25.03	13.97 LT
R258210	R258210	973471.8370	2437491.1940	95.50	409+29.98	863.39 RT

BENCHMARKS

****

BM1 ELEVATION = 128.73
N 991703 E 2408799
L STATION 30+99.00 115 RIGHT
R/R SPIKE IN 22" OAK

****

BM2 ELEVATION = 87.35
N 989026 E 2412995
L STATION 82+74.00 111 LEFT
R/R SPIKE IN 24" PINE

****

BM3 ELEVATION = 154.85
N 984662 E 2419604
L STATION 170+32.00 392 RIGHT
R/R SPIKE IN POWER POLE

****

BM4 ELEVATION = 102.47
N 982428 E 2421369
L STATION 197+65.00 450 LEFT
R/R SPIKE IN 24" SWEET GUM

****

BM5 ELEVATION = 107.76
N 981353 E 2425409
L STATION 249+28.00 467 RIGHT
R/R SPIKE IN 14" PINE

****

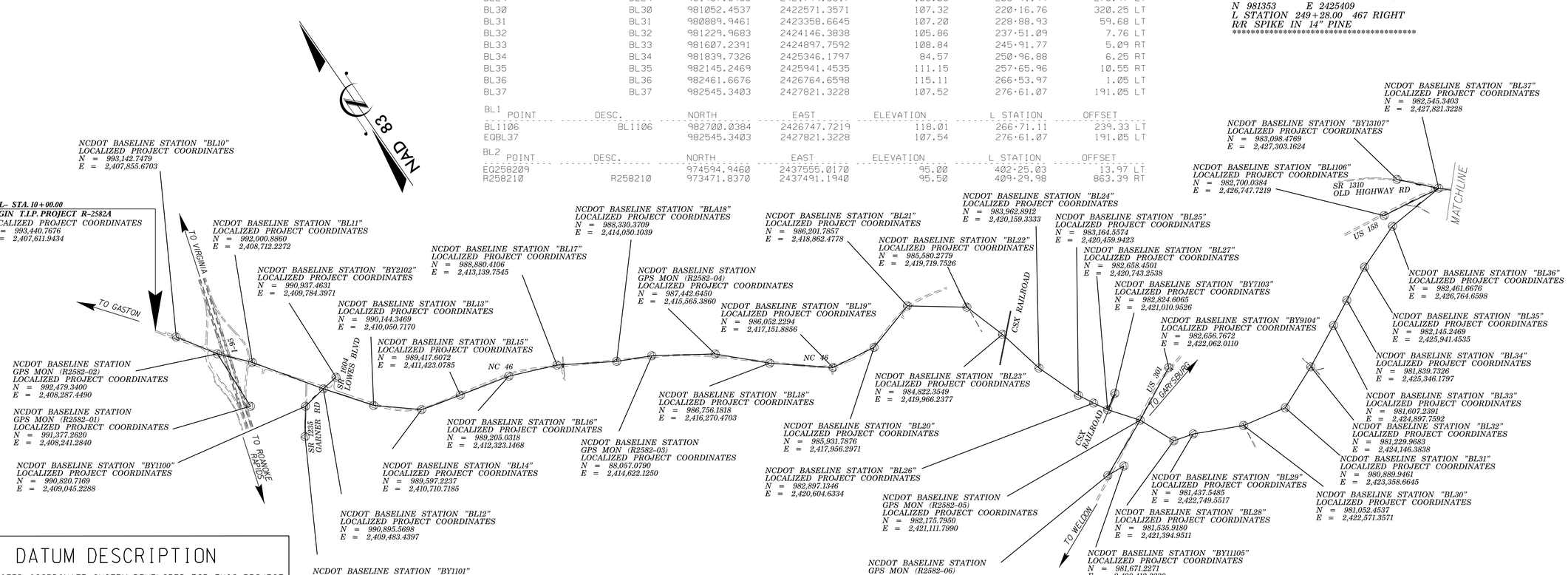

DATUM DESCRIPTION

THE LOCALIZED COORDINATE SYSTEM DEVELOPED FOR THIS PROJECT IS BASED ON THE STATE PLANE COORDINATES ESTABLISHED BY NCDOT FOR MONUMENT "CENTROID"
WITH NAD 83 (CORS96) STATE PLANE GRID COORDINATES OF
NORTHING: 9793000.0000(ft) EASTING: 2474400.0000(ft)
ELEVATION: 100.0(ft)
THE AVERAGE COMBINED GRID FACTOR USED ON THIS PROJECT (GROUND TO GRID) IS: 1.000084770
THE N.C. LAMBERT GRID BEARING AND LOCALIZED HORIZONTAL GROUND DISTANCE FROM "CENTROID" TO -L- STATION IS

ALL LINEAR DIMENSIONS ARE LOCALIZED HORIZONTAL DISTANCES
VERTICAL DATUM USED IS NAVD 88

NOTE: DRAWING NOT TO SCALE

NOTES:

THE CONTROL DATA FOR THIS PROJECT CAN BE FOUND ELECTRONICALLY BY SELECTING

HTTP://WWW.CONNECT.NCDOT.GOV/RESOURCES/LOCATION/

FILE: r2582a_ls_control.txt

SITE CALIBRATION PARAMETERS HAVE NOT BEEN DETERMINED FOR THIS PROJECT.
IF FURTHER INFORMATION IS NEEDED, PLEASE CONTACT THE LOCATION AND SURVEYS UNIT.

△ *INDICATES GEODETIC CONTROL MONUMENTS USED OR SET FOR HORIZONTAL PROJECT CONTROL BY THE NCDOT LOCATION AND SURVEYS UNIT.*

PROJECT CONTROL ESTABLISHED UTILIZING NCGS REAL TIME NETWORK

PROJECT REFERENCE NO.	SHEET NO.
R-2582A	IC-02

SURVEY CONTROL SHEET R-2582A

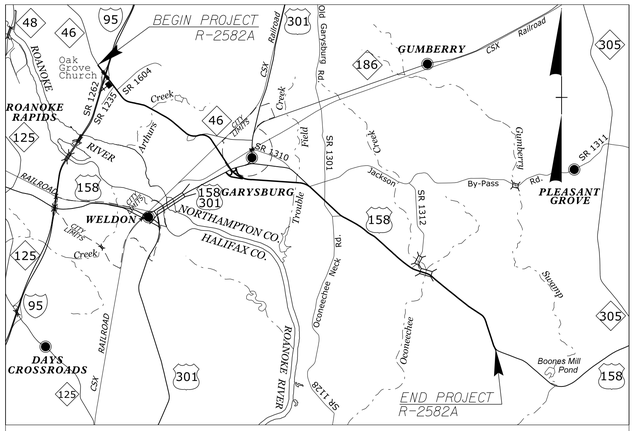

VICINITY MAP

BL

POINT	DESC.	NORTH	EAST	ELEVATION	L STATION	OFFSET
BL38	BL38	981761.4693	2428679.5133	82.71	287+70.40	18.56 LT
BL39	BL39	981141.8977	2429332.4795	99.81	296+70.51	12.23 LT
R258207	R258207	980647.9970	2429854.5580	100.98	303+89.18	8.25 LT
R258208	R258208	980029.9270	2430516.4290	100.97	312+94.76	9.10 LT
BL41	BL41	979105.5204	2431487.7365	100.60	326+35.60	2.33 RT
BL42	BL42	978363.4066	2432286.9881	101.24	337+26.25	1.80 LT
BL43	BL43	977525.7341	2433231.4426	109.86	349+90.47	2.26 LT
BL44	BL44	977000.1776	2434219.1893	104.06	361+09.17	24.10 LT
BL45	BL45	976535.5906	2435023.7091	103.74	370+36.59	41.61 LT
BL46	BL46	975912.8437	2435921.7675	99.76	381+27.61	27.07 LT
BL47	BL47	975310.6306	2436752.7230	96.51	391+51.89	46.32 LT
R258209	R258209	974594.9460	2437555.0170	94.97	402+25.03	13.97 LT
BL48	BL48	973883.9682	2438346.1213	92.83	412+88.55	15.35 LT
BL49	BL49	973154.0532	2439154.7635	89.26	423+77.90	15.25 LT
BL50	BL50	972499.8907	2439961.9641	90.62	434+20.67	51.41 LT
BL51	BL51	972057.2575	2440589.5040	96.89	441+93.39	8.19 LT
BL52	BL52	971740.3698	2441411.4707	88.24	450+77.53	17.48 LT

BY

POINT	DESC.	NORTH	EAST	ELEVATION	L STATION	OFFSET
EQR258202		992479.3400	2408287.4490	147.15	21+74.96	20.00 RT
R258201	R258201	991377.2620	2408241.2840	132.53	29+67.28	749.97 RT

BY1

POINT	DESC.	NORTH	EAST	ELEVATION	L STATION	OFFSET
EQABL12		990895.5698	2409483.4937	125.76	41+61.39	60.51 RT
BY1100	BY1100	990820.7169	2409045.2288	129.33	39+56.62	455.16 RT
BY1101	BY1101	990380.8548	2408732.2468	129.73	41+18.53	970.16 RT

BENCHMARKS

****

BM6 ELEVATION = 79.42
N 981867 E 2428712
L STATION 287+22.00 117 LEFT
R/R SPIKE IN 36" HICKORY

****

****

BM7 ELEVATION = 102.44
N 978867 E 2431344
L STATION 326+94.00 275 RIGHT
R/R SPIKE IN 20" GUM

****

****

BM8 ELEVATION = 100.33
N 975783 E 2435918
L STATION 382+00.00 81 RIGHT
R/R SPIKE IN 10" OAK

****

****

BM9 ELEVATION = 75.72
N 971368 E 2442330
L STATION 460+71.00 11 RIGHT
R/R SPIKE IN 30" OAK

****

****

BM10 ELEVATION = 99.43
N 968992 E 2445652
L STATION 501+52.00 196 LEFT
R/R SPIKE IN 20" PINE

****

BY2

POINT	DESC.	NORTH	EAST	ELEVATION	L STATION	OFFSET
BY2102	BY2102	990937.4631	2409784.3971	127.41	43+09.55	204.72 LT
EQBL12		990895.5698	2409483.4937	125.76	41+61.39	60.51 RT

BY7

POINT	DESC.	NORTH	EAST	ELEVATION	L STATION	OFFSET
BY7103	BY7103	982824.6065	2421010.9526	120.16	192+46.22	320.96 LT
EQBL27		982658.4501	2420743.2538	117.81	192+67.01	6.58 LT

BY9

POINT	DESC.	NORTH	EAST	ELEVATION	L STATION	OFFSET
BY9104	BY9104	982656.7672	2422062.0110	108.12	198+88.48	1169.72 LT
EQR258205		982175.7950	2421111.7990	100.24	198+66.27	104.95 LT
R258206	R258206	981695.0950	2420078.9890	101.71	198+04.98	1032.60 RT

BY11

POINT	DESC.	NORTH	EAST	ELEVATION	L STATION	OFFSET
EQR258206		981695.0950	2420078.9890	101.71	198+04.98	1032.60 RT
BY11105	BY11105	981671.2271	2420412.3230	97.95	199+82.76	749.62 RT

BY13

POINT	DESC.	NORTH	EAST	ELEVATION	L STATION	OFFSET
BY13107	BY13107	983098.4769	2427303.1624	106.23	271+39.52	624.63 LT
EQABL37		982545.3403	2427821.3228	107.54	276+61.07	191.05 LT

BY14

POINT	DESC.	NORTH	EAST	ELEVATION	L STATION	OFFSET
BY14108	BY14108	981018.5080	2430967.6640	96.64	309+48.87	1039.28 LT
EQR258207		980647.9970	2429854.5580	100.99	303+89.18	8.25 LT

BY15

POINT	DESC.	NORTH	EAST	ELEVATION	L STATION	OFFSET
BY15109	BY15109	979896.7132	2431454.4495	98.41	320+70.75	552.68 LT
EQBL41		979105.5204	2431487.7365	100.61	326+35.60	2.33 RT

BY16

POINT	DESC.	NORTH	EAST	ELEVATION	L STATION	OFFSET
EQABL41		979105.5204	2431487.7365	100.61	326+35.60	2.33 RT
BY16110	BY16110	978770.6909	2431404.8562	100.94	328+03.83	303.46 RT

BY17

POINT	DESC.	NORTH	EAST	ELEVATION	L STATION	OFFSET
EQBL43		977525.7341	2433231.4426	109.84	349+90.47	2.26 LT
BY17111	BY17111	977548.3773	2432588.6081	108.18	345+03.19	387.30 RT

BY18

POINT	DESC.	NORTH	EAST	ELEVATION	L STATION	OFFSET
BY18112	BY18112	972490.8761	2441068.8877	83.39	444+57.76	606.00 LT
EQBL51		972057.2575	2440589.5040	96.83	441+93.39	8.19 LT

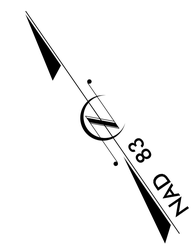

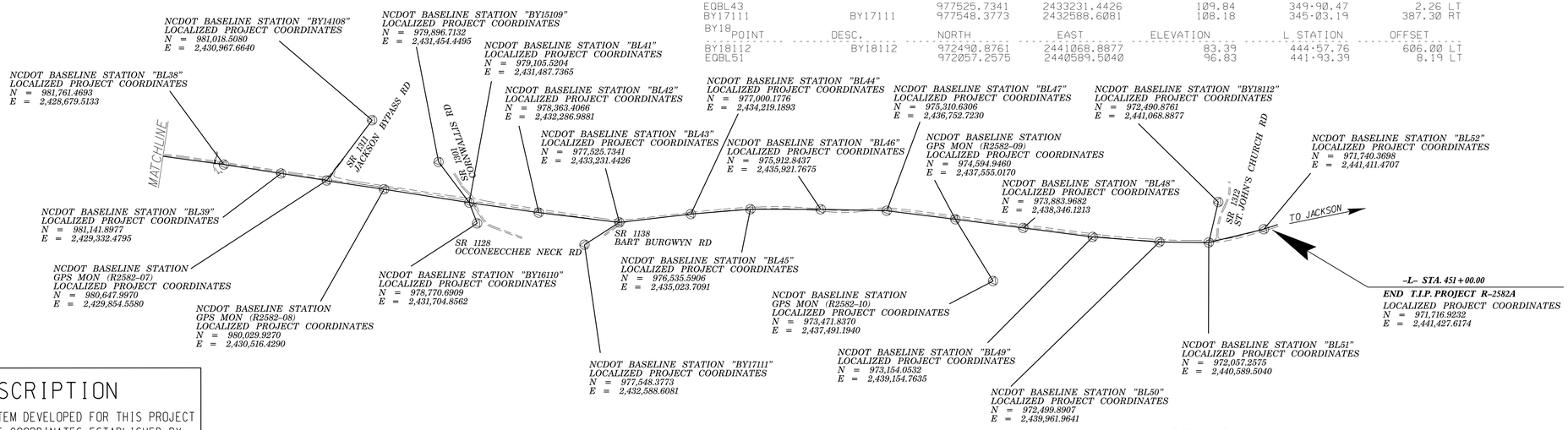

DATUM DESCRIPTION

THE LOCALIZED COORDINATE SYSTEM DEVELOPED FOR THIS PROJECT IS BASED ON THE STATE PLANE COORDINATES ESTABLISHED BY NCDOT FOR MONUMENT "CENTROID"
WITH NAD 83 (CORS96) STATE PLANE GRID COORDINATES OF
NORTHING: 9793000.0000(ft) EASTING: 2474400.0000(ft)
ELEVATION: 100.0(ft)
THE AVERAGE COMBINED GRID FACTOR USED ON THIS PROJECT (GROUND TO GRID) IS: 1.000084770
THE N.C. LAMBERT GRID BEARING AND LOCALIZED HORIZONTAL GROUND DISTANCE FROM "CENTROID" TO -L- STATION IS

ALL LINEAR DIMENSIONS ARE LOCALIZED HORIZONTAL DISTANCES
VERTICAL DATUM USED IS NAVD 88

NOTE: DRAWING NOT TO SCALE

NOTES:

THE CONTROL DATA FOR THIS PROJECT CAN BE FOUND ELECTRONICALLY BY SELECTING

HTTP://WWW.CONNECT.NCDOT.GOV/RESOURCES/LOCATION

FILE: r2582a_ls_control.txt

SITE CALIBRATION PARAMETERS HAVE NOT BEEN DETERMINED FOR THIS PROJECT.

IF FURTHER INFORMATION IS NEEDED, PLEASE CONTACT THE LOCATION AND SURVEYS UNIT.

△ INDICATES GEODETIC CONTROL MONUMENTS USED OR SET FOR HORIZONTAL PROJECT CONTROL BY THE NCDOT LOCATION AND SURVEYS UNIT.

PROJECT CONTROL ESTABLISHED UTILIZING NCGS REAL TIME NETWORK

DocuSign Envelope ID: E6D71254-8E7F-4B69-B663-CC76A4C49C10

6/2/99

PAVEMENT SCHEDULE

(FINAL PAVEMENT DESIGN)

C1	PROP. APPROX. 1½″ ASPHALT CONCRETE SURFACE COURSE, TYPE S9.5B, AT AN AVERAGE RATE OF 165 LBS. PER SQ. YD.	E6	PROP. VAR. DEPTH ASPHALT CONCRETE BASE COURSE, TYPE B25.0C, AT AN AVERAGE RATE OF 114 LBS. PER SQ. YD. PER 1″ DEPTH. TO BE PLACED IN LAYERS NOT LESS THAN 3″ IN DEPTH OR GREATER THAN 5½″ IN DEPTH.
C2	PROP. APPROX. 3″ ASPHALT CONCRETE SURFACE COURSE TYPE S9.5B, AT AN AVERAGE RATE OF 165 LBS. PER SQ. YD. IN EACH OF TWO LAYERS.	J1	PROP. 6″ AGGREGATE BASE COURSE.
C3	PROP. VAR. DEPTH ASPHALT CONCRETE SURFACE COURSE, TYPE S9.5B, AT AN AVERAGE RATE OF 110 LBS. PER SQ. YD. PER 1″ DEPTH, TO BE PLACED IN LAYERS NOT LESS THAN 1½″ IN DEPTH OR GREATER THAN 2″ IN DEPTH.	J2	PROP. 8″ AGGREGATE BASE COURSE.
C4	PROP. APPROX. 3″ ASPHALT CONCRETE SURFACE COURSE TYPE S9.5C, AT AN AVERAGE RATE OF 168 LBS. PER SQ. YD. IN EACH OF TWO LAYERS.	J3	PROP. 10″ AGGREGATE BASE COURSE.
C5	PROP. VAR. DEPTH ASPHALT CONCRETE SURFACE COURSE, TYPE S9.5C, AT AN AVERAGE RATE OF 112 LBS. PER SQ. YD. PER 1″ DEPTH, TO BE PLACED IN LAYERS NOT LESS THAN 1½″ IN DEPTH OR GREATER THAN 2″ IN DEPTH.	P	PRIME COAT AT THE RATE OF .35 GAL. PER SQ. YD.
C6	PROP. APPROX. 3″ ASPHALT CONCRETE SURFACE COURSE TYPE S9.5D, AT AN AVERAGE RATE OF 168 LBS. PER SQ. YD. IN EACH OF TWO LAYERS.	R1	8 x 12 CURB AND GUTTER
C7	PROP. VAR. DEPTH ASPHALT CONCRETE SURFACE COURSE, TYPE S9.5D, AT AN AVERAGE RATE OF 112 LBS. PER SQ. YD. PER 1″ DEPTH, TO BE PLACED IN LAYERS NOT LESS THAN 1½″ IN DEPTH OR GREATER THAN 2″ IN DEPTH.	R2	9 x 12 CURB AND GUTTER
D1	PROP. APPROX. 2½″ ASPHALT CONCRETE INTERMEDIATE COURSE, TYPE I19.0C, AT AN AVERAGE RATE OF 285 LBS. PER SQ. YD.	R3	2′-6″ CONC. CURB AND GUTTER
D2	PROP. APPROX. 4″ ASPHALT CONCRETE INTERMEDIATE COURSE, TYPE I19.0C, AT AN AVERAGE RATE OF 456 LBS. PER SQ. YD.	R4	10″ CONCRETE TRUCK APRON
D3	PROP. VAR. DEPTH ASPHALT CONCRETE INTERMEDIATE COURSE, TYPE I19.0C, AT AN AVERAGE RATE OF 114 LBS. PER SQ. YD. PER 1″ DEPTH, TO BE PLACED IN LAYERS NOT LESS THAN 2½″ IN DEPTH OR GREATER THAN 4″ IN DEPTH.	R5	SHOULDER BERM GUTTER
E1	PROP. APPROX. 3″ ASPHALT CONCRETE BASE COURSE, TYPE B25.0C, AT AN AVERAGE RATE OF 342 LBS. PER SQ. YD.	T	EARTH MATERIAL.
E2	PROP. APPROX. 4″ ASPHALT CONCRETE BASE COURSE, TYPE B25.0C, AT AN AVERAGE RATE OF 456 LBS. PER SQ. YD.	U	EXISTING PAVEMENT.
E3	PROP. APPROX. 4.5″ ASPHALT CONCRETE BASE COURSE, TYPE B25.0C, AT AN AVERAGE RATE OF 513 LBS. PER SQ. YD.	W	SEE WEDGING DETAIL
E4	PROP. APPROX. 5″ ASPHALT CONCRETE BASE COURSE, TYPE B25.0C, AT AN AVERAGE RATE OF 570 LBS. PER SQ. YD.		
E5	PROP. APPROX. 7″ ASPHALT CONCRETE BASE COURSE, TYPE B25.0C, AT AN AVERAGE RATE OF 456 LBS. PER SQ. YD.FOR THE FIRST LAYER(4″), THEN AT AN AVERAGE RATE OF 342 LBS. PER SQ. YD. FOR THE SECOND LAYER (3″).		

NOTE: PAVEMENT EDGE SLOPES ARE 1:1 UNLESS SHOWN OTHERWISE.

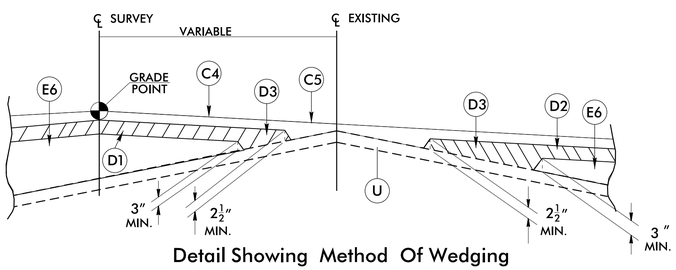

Detail Showing Method Of Wedging

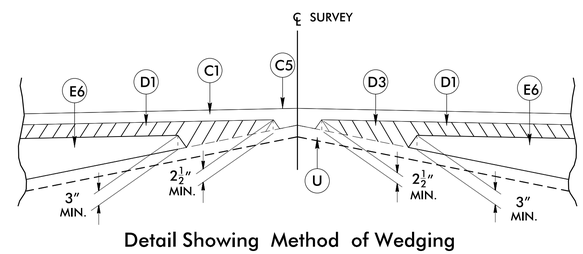

Detail Showing Method of Wedging

PROJECT REFERENCE NO.	SHEET NO.
R-2582A	2A-01

ROADWAY DESIGN ENGINEER
3/28/2019
NORTH CAROLINA PROFESSIONAL SEAL 046981 ENGINEER FAITH E. JOHNKE
DocuSigned by: Faith E. Johnke
B0D2B3BCE7C4456...

PAVEMENT DESIGN ENGINEER
3/28/2019
NORTH CAROLINA PROFESSIONAL SEAL 038176 ENGINEER SHULAI ZHANG
DocuSigned by: Shulai Zhang
2A3C67F4181F433...

DOCUMENT NOT CONSIDERED FINAL UNLESS ALL SIGNATURES COMPLETED

Prepared in the Office of: SUMMIT DESIGN AND ENGINEERING SERVICES
NC FIRM LICENSE Nos P-0339
504 Meadowlands Drive
Hillsborough, NC 27278
(919) 732-3883
(919) 732-6676 (FAX)

28-MAR-2019 13:58
R:\Roadway\Proj\R2582A_typ.dgn
sarahlokin

DocuSign Envelope ID: E6D71254-8E7F-4B69-B663-CC76A4C49C10

PROJECT REFERENCE NO.	SHEET NO.
R-2582A	2A-02

ROADWAY DESIGN ENGINEER	PAVEMENT DESIGN ENGINEER
3/28/2019	3/28/2019
NORTH CAROLINA PROFESSIONAL SEAL 046981 ENGINEER FAITH E. JOHNKE	NORTH CAROLINA PROFESSIONAL SEAL 038176 ENGINEER SHULAI ZHANG
DocuSigned by: Faith E. Johnke	DocuSigned by: Shulai Zhang

DOCUMENT NOT CONSIDERED FINAL UNLESS ALL SIGNATURES COMPLETED

Prepared in the Office of: SUMMIT DESIGN AND ENGINEERING SERVICES — NC FIRM LICENSE Nos P-0339 504 Meadowlands Drive Hillsborough, NC 27278 (919) 732-3883 (919) 732-6676 (FAX)

C4	3″ S9.5C
D1	2½″ I19.0C
D2	4″ I19.0C
E1	3″ B25.0C
E3	4½″ B25.0C
J2	8″ ABC
T	EARTH MATERIAL
U	EXIST. PAVEMENT
W	WEDGING

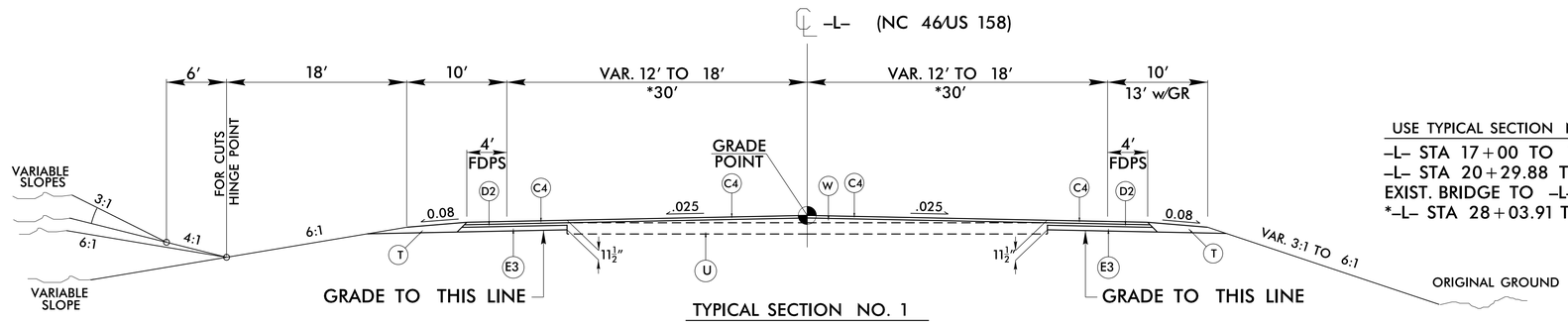

TYPICAL SECTION NO. 1

USE TYPICAL SECTION NO. 1
–L– STA 17+00 TO 18+93.88
–L– STA 20+29.88 TO EXIST. BRIDGE
EXIST. BRIDGE TO –L– STA 26+67.91
*–L– STA 28+03.91 TO 33+00.00

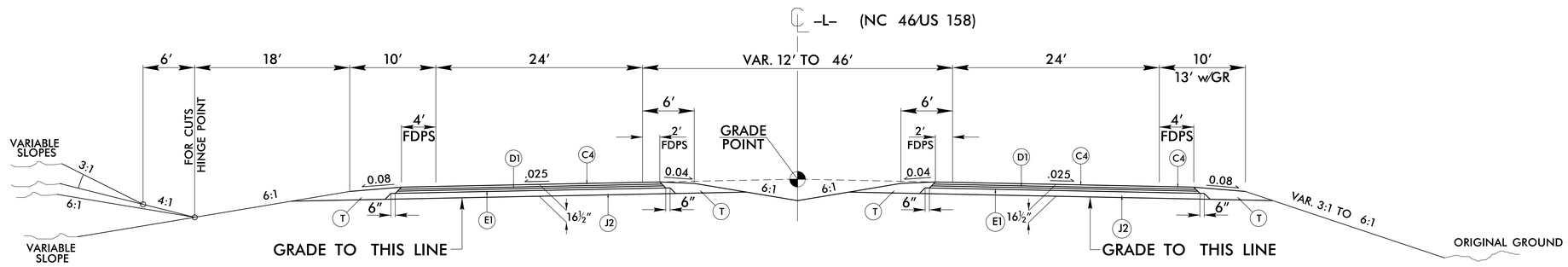

TYPICAL SECTION NO. 2

USE TYPICAL SECTION NO. 2
–L– STA 33+00.00 TO 43+19.80

USE TYPICAL SECTION NO. 3
–L– STA 43+19.80 TO 64+00.00
–L– STA 80+50.00 TO 91+00.00
–L– STA 94+00.00 TO 96+50.00
–L– STA 110+00.00 TO 118+00.00
–L– STA 123+50.00 TO 169+56.49
–L– STA 170+84.49 TO 192+30.23
–L– STA 193+18.23 TO 197+88.00
–L– STA 198+92.25 TO 350+50.00
–L– STA 356+50.00 TO 441+50.00
–L– STA 443+00.00 TO 448+00.00

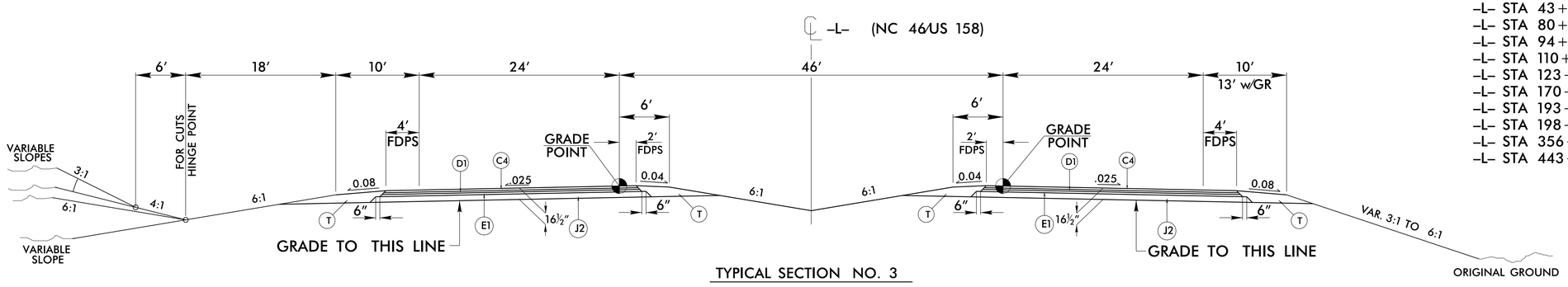

TYPICAL SECTION NO. 3

26-MAR-2019 15:02
R:\Roadway\Proj\R2582A_Typ.dgn
ncdot\cjoyner

DocuSign Envelope ID: E6D71254-8E7F-4B69-B663-CC76A4C49C10

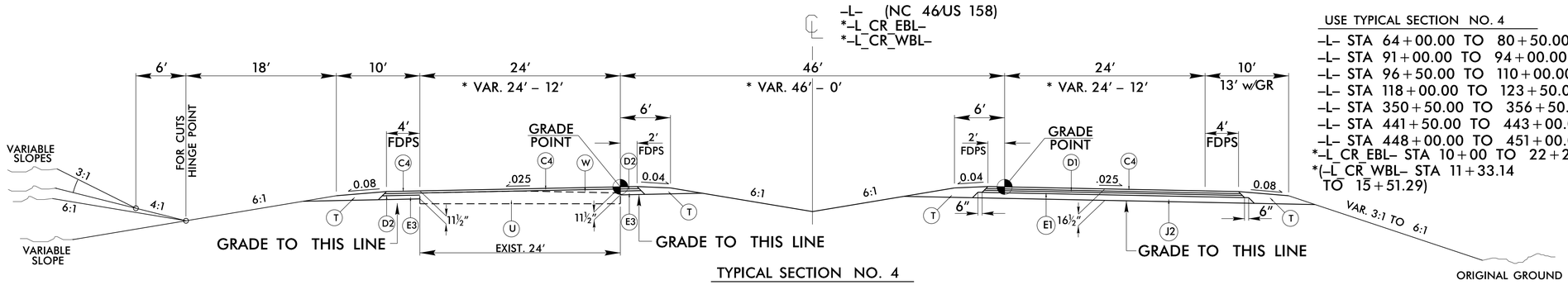

TYPICAL SECTION NO. 4

USE TYPICAL SECTION NO. 4

-L- STA 64+00.00 TO 80+50.00
-L- STA 91+00.00 TO 94+00.00
-L- STA 96+50.00 TO 110+00.00
-L- STA 118+00.00 TO 123+50.00
-L- STA 350+50.00 TO 356+50.00
-L- STA 441+50.00 TO 443+00.00
-L- STA 448+00.00 TO 451+00.00
*-L_CR_EBL- STA 10+00 TO 22+27.52
*(-L_CR_WBL- STA 11+33.14 TO 15+51.29)

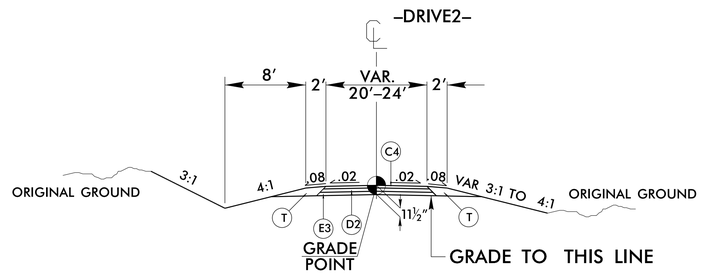

TYPICAL SECTION NO. 5

USE TYPICAL SECTION NO. 5

-DRIVE2- STA 448+44.28 TO 449+29.37

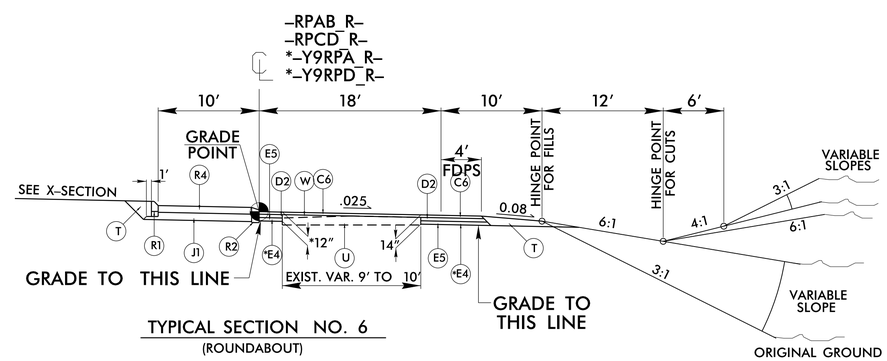

TYPICAL SECTION NO. 6
(ROUNDABOUT)

USE TYPICAL SECTION NO. 6

-RPAB_R- STA 10+00 TO 13+14.16
-RPCD_R- STA 10+00 TO 13+14.16
*-Y9RPA_R- STA 10+00 TO 13+14.16
*-Y9RPD_R- STA 10+00 TO 13+14.16

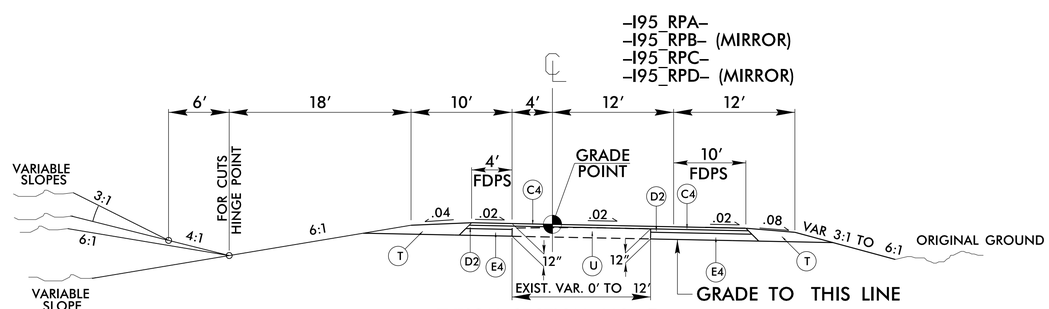

TYPICAL SECTION NO. 7

USE TYPICAL SECTION NO. 7

-I95_RPA- STA 13+00 TO 16+49.14
-I95_RPB- STA 12+00 TO 17+69.89
-I95_RPC- STA 10+50 TO 13+51.37
-I95_RPD- STA 12+00 TO 17+40.31

PROJECT REFERENCE NO.	SHEET NO.
R-2582A	2A-03

ROADWAY DESIGN ENGINEER
3/28/2019
NORTH CAROLINA PROFESSIONAL SEAL 046981 ENGINEER FAITH E. JOHNKE
DocuSigned by: Faith E. Johnke

PAVEMENT DESIGN ENGINEER
3/28/2019
NORTH CAROLINA PROFESSIONAL SEAL 038176 ENGINEER SHIHAI ZHANG
DocuSigned by: Shihai Zhang

DOCUMENT NOT CONSIDERED FINAL UNLESS ALL SIGNATURES COMPLETED

Prepared in the Office of: SUMMIT DESIGN AND ENGINEERING SERVICES
NC FIRM LICENSE Nos P-0339
504 Meadowlands Drive
Hillsborough, NC 27278
(919) 732-3883
(919) 732-6676 (FAX)

C4	3" S9.5C
C6	3" S9.5D
D1	2½" I19.0C
D2	4" I19.0C
E1	3" B25.0C
E2	4" B25.0C
E3	4½" B25.0C
E4	5" B25.0C
E5	7" B25.0C
J1	6" ABC
J2	8" ABC
R1	8" x 12" C & G
R2	9" x 12" C & G
R4	10" CONC. APRON
T	EARTH MATERIAL
U	EXIST. PAVEMENT
W	WEDGING

6/2/99

06-MAR-2019 15:02
R:\Roadway\Proj\r2582a_typ.dgn

DocuSign Envelope ID: E6D71254-8E7F-4B69-B663-CC76A4C49C10

PROJECT REFERENCE NO.	SHEET NO.
R-2582A	2A-04

ROADWAY DESIGN ENGINEER	PAVEMENT DESIGN ENGINEER
3/28/2019	3/28/2019
NORTH CAROLINA PROFESSIONAL SEAL 046981 ENGINEER FAITH E. JAHNKE	NORTH CAROLINA PROFESSIONAL SEAL 038176 ENGINEER SHUHAI ZHANG
DocuSigned by: Faith E. Jahnke	DocuSigned by: Shuhai Zhang

DOCUMENT NOT CONSIDERED FINAL UNLESS ALL SIGNATURES COMPLETED

Prepared in the Office of: SUMMIT DESIGN AND ENGINEERING SERVICES — NC FIRM LICENSE Nos P-0339 504 Meadowlands Drive Hillsborough, NC 27278 (919) 732-3883 (919) 732-6676 (FAX)

C1	1½" S9.5B
C2	3" S9.5B
D1	2½" I19.0C
E2	4" B25.0C
R5	SBG
T	EARTH MATERIAL
U	EXIST. PAVEMENT
W	WEDGING

–Y1– (SR 1262: Long Farm Rd.)
–Y5– (SR 1231: Loop Rd.)
–Y10– (SR 1239: Hilltop Dr.)
–Y11– (Coleman St.)
*–Y14– (US 158/Old Highway Rd. Connector)
–Y16– (SR 1128: Occoneecchee Neck Rd.)
–Y18– (SR 1312: St. John's Church Rd.)

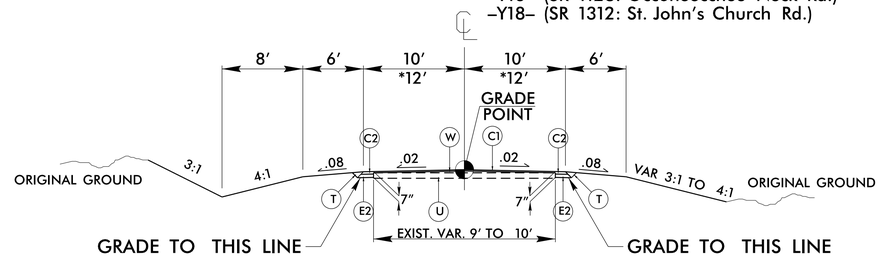

TYPICAL SECTION NO. 8

USE TYPICAL SECTION NO. 8
–Y1– STA 10+00.00 TO 12+93.16
–Y5– STA 11+17.29 TO 11+71.94
–Y10– STA 10+30.00 TO 11+30.00
–Y11– STA 11+50.00 TO 12+44.83
*–Y14– STA 11+82.56 TO 13+61.71
–Y16– STA 18+00.00 TO 19+45.45
–Y18– STA 10+48.24 TO 11+30.00

–Y1– (SR 1262: Long Farm Rd.)
–Y2– (SR 1235: Garner Rd.)
–Y5– (SR 1231: Loop Rd.)
–Y13– (SR 1310: Old Highway Rd.)
–Y13A– (Service Rd.)
*–Y14– (US 158/Old Highway Rd. Connector)
–Y16– (SR 1301: Cornwallis Rd.)

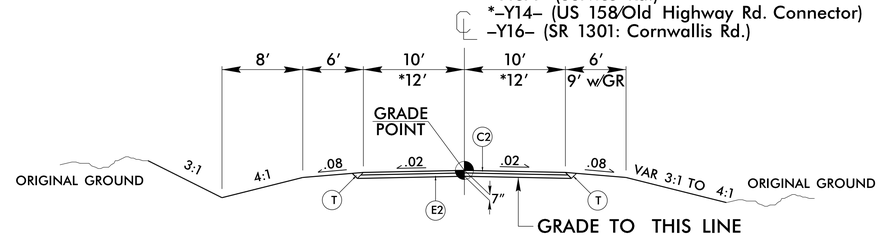

TYPICAL SECTION NO. 9

USE TYPICAL SECTION NO. 9
–Y1– STA 12+93.16 TO 28+81.21
–Y2– STA 12+50.00 TO 13+93.92
–Y5– STA 11+71.94 TO 13+50.40
–Y13– STA 10+47.00 TO 15+00.00
–Y13A– STA 50+00.00 TO EQ. STA 67+57.51(BK)=STA 10+00.00(AH)
–Y13A– EQ. STA 67+57.51(BK)=STA 10+00.00(AH) TO STA 40+61.59
*–Y14– STA 13+61.71 TO 17+54.98
–Y16– STA 20+68.76 TO 23+00.00

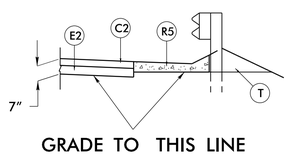

PARTIAL TYPICAL

USE IN CONJUNCTION WITH TYPICAL SECTION # 9
–Y13A– STA. 20+45 TO –Y13A– STA. 26+00

–Y3– (SR 1604: Lowes Blvd.)

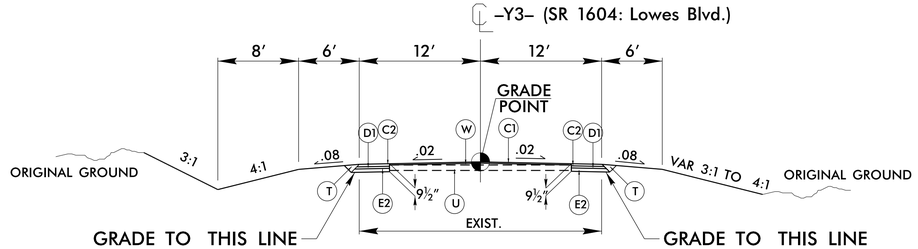

TYPICAL SECTION NO. 10

USE TYPICAL SECTION NO. 10
–Y3– STA 10+46.90 TO 12+00.00

–DRIVE– (Soil Path)
*–Y4– (Soil Path)

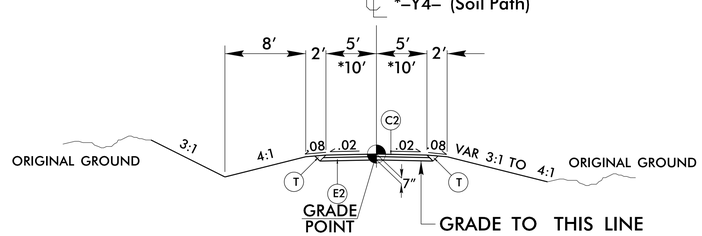

TYPICAL SECTION NO. 11

USE TYPICAL SECTION NO. 11
–DRIVE– STA 10+32.31 TO 15+50.00
*–Y4– STA 10+47.00 TO 12+00.00

6/2/99

26-MAR-2019 15:02
R:\Roadway\Proj\R2582a_typ_sec_01_10_11.dgn

DocuSign Envelope ID: E6D71254-8E7F-4B69-B663-CC76A4C49C10

6/2/99

PROJECT REFERENCE NO.	SHEET NO.
R-2582A	2A-05

ROADWAY DESIGN ENGINEER
3/28/2019
NORTH CAROLINA PROFESSIONAL SEAL 046981 ENGINEER FAITH E. JOHNKE
DocuSign Envelope ID: 8D0285BC-7C9F-49...
Faith E. Johnke

PAVEMENT DESIGN ENGINEER
3/28/2019
NORTH CAROLINA PROFESSIONAL SEAL 038176 ENGINEER SHUHAI ZHANG
DocuSign Envelope ID: 2A3D67F4-B17F-43...
Shuhai Zhang

DOCUMENT NOT CONSIDERED FINAL UNLESS ALL SIGNATURES COMPLETED

Prepared in the Office of: SUMMIT DESIGN AND ENGINEERING SERVICES
NC FIRM LICENSE Nos P-0339
504 Meadowlands Drive
Hillsborough, NC 27278
(919) 732-3883
(919) 732-6676 (FAX)

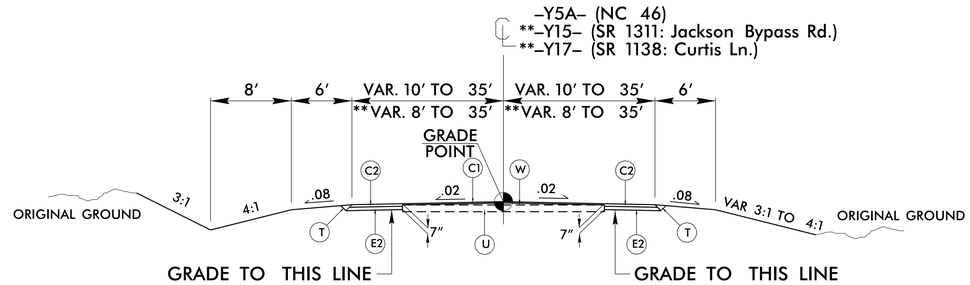

TYPICAL SECTION NO. 12
(CUL–DE–SAC)

USE TYPICAL SECTION NO. 12
–Y5A– STA 11+65.00 TO 14+50.00
**–Y15– STA 11+65.00 TO 13+00.00
**–Y17– STA 10+00.00 TO 11+00.00

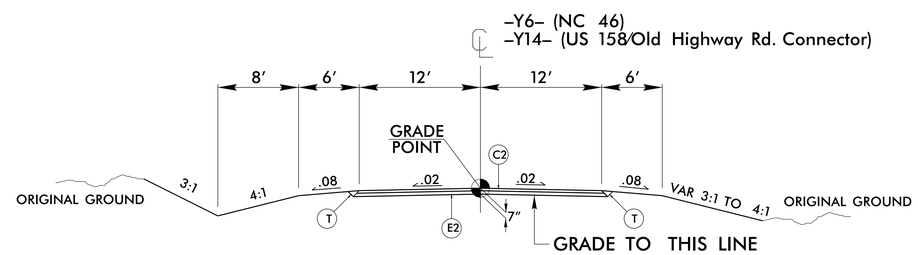

TYPICAL SECTION NO. 13

USE TYPICAL SECTION NO. 13
–Y6– STA 10+47.63 TO 12+00.00
–Y14– STA 13+16.71 TO 17+54.98

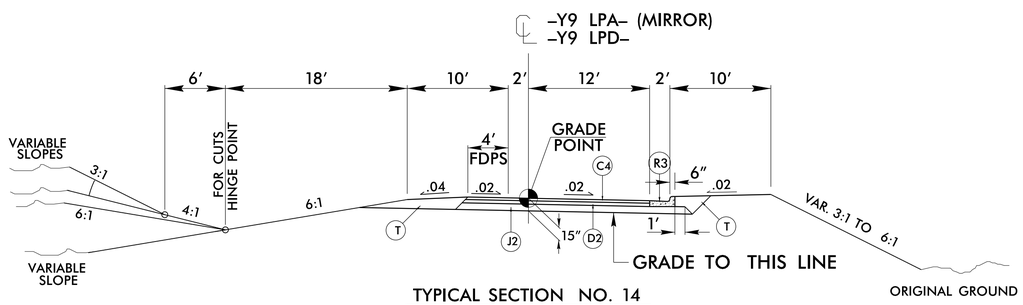

TYPICAL SECTION NO. 14

USE TYPICAL SECTION NO. 14
–Y9LPA– STA 10+00 TO 20+16.90
–Y9LPD– STA 10+00 TO 19+94.93

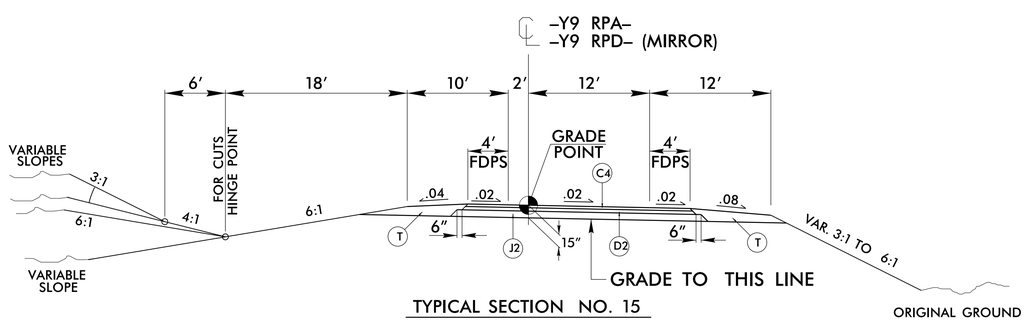

TYPICAL SECTION NO. 15

USE TYPICAL SECTION NO. 15
–Y9 RPA– STA 10+00 TO 32+62.85
–Y9 RPD– STA 10+00 TO 28+29.50

C1	1½″ S9.5B
C2	3″ S9.5B
C4	3″ S9.5C
D2	4″ I19.0C
E2	4″ B25.0C
R3	2′-6″ C&G
J2	8″ ABC
T	EARTH MATERIAL
U	EXIST. PAVEMENT
W	WEDGING

06-MAR-2019 15:02
R-2582A_Rdwy_typ.dgn
pr0jonkin

DocuSign Envelope ID: E6D71254-8E7F-4B69-B663-CC76A4C49C10

PROJECT REFERENCE NO.	SHEET NO.
R-2582A	2A-06

ROADWAY DESIGN ENGINEER	PAVEMENT DESIGN ENGINEER
3/28/2019	3/28/2019
NORTH CAROLINA PROFESSIONAL SEAL 046981 ENGINEER FAITH E. JOHNKE	NORTH CAROLINA PROFESSIONAL SEAL 038176 ENGINEER SHUKAI ZHANG
DocuSigned by: Faith E. Johnke	DocuSigned by: Shukai Zhang

DOCUMENT NOT CONSIDERED FINAL UNLESS ALL SIGNATURES COMPLETED

Prepared in the Office of: SUMMIT DESIGN AND ENGINEERING SERVICES
NC FIRM LICENSE Nos P-0339
504 Meadowlands Drive
Hillsborough, NC 27278
(919) 732-3883
(919) 732-6676 (FAX)

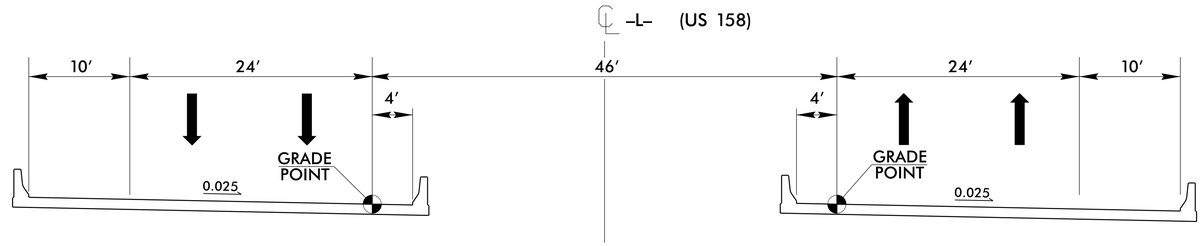

STRUCTURES OVER –Y7–
(23′–0″ VERTICAL CLEARANCE + 4′–7″ SUPERSTRUCTURE DEPTH)

USE STRUCTURES OVER –Y7–
–L– STA 169+57.99 TO 170+82.99

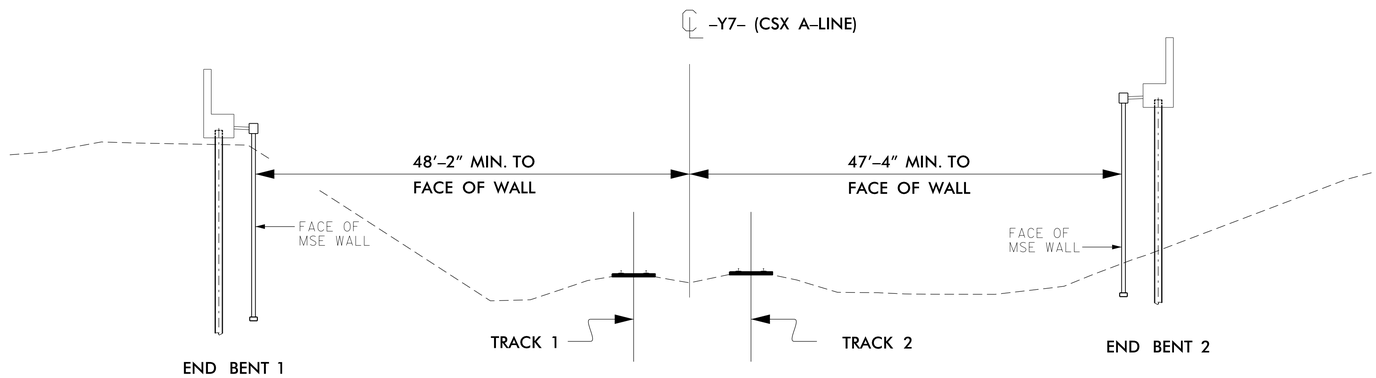

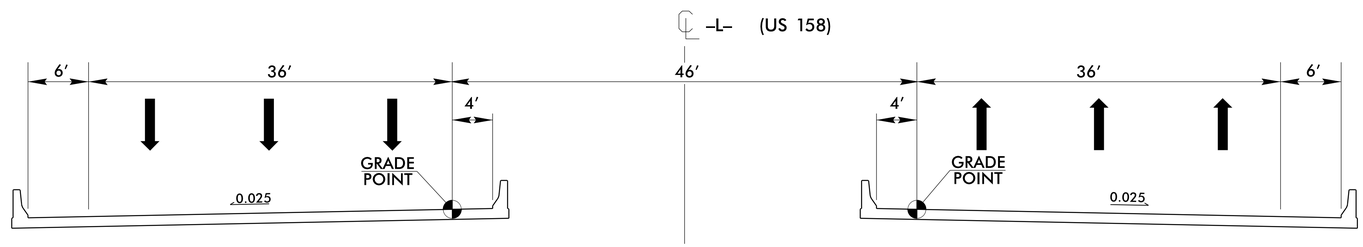

STRUCTURES OVER –Y8–
(23′–0″ VERTICAL CLEARANCE + 4′–7″ SUPERSTRUCTURE DEPTH)

USE STRUCTURES OVER –Y8–
–L– STA 191+32.35 TO 193+93.18

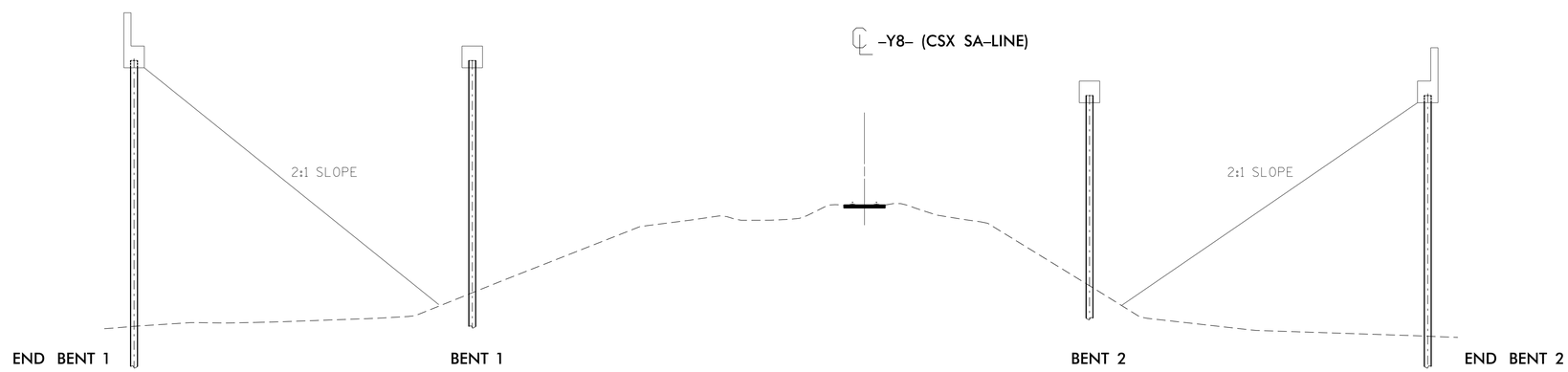

6/2/99
06-MAR-2019 15:02
R:\Roadway\Proj\R-2582A_Rdy_Typ.dgn

DocuSign Envelope ID: E6D71254-8E7F-4B69-B663-CC76A4C49C10

6/2/99

PROJECT REFERENCE NO.	SHEET NO.
R-2582A	2A-07

ROADWAY DESIGN ENGINEER	PAVEMENT DESIGN ENGINEER
3/28/2019	3/28/2019
NORTH CAROLINA PROFESSIONAL SEAL 046981 ENGINEER FAITH E. JOHNKE	NORTH CAROLINA PROFESSIONAL SEAL 038176 ENGINEER SHUILAI ZHANG
DocuSigned by: Faith E. Johnke	DocuSigned by: Shuilai Zhang

DOCUMENT NOT CONSIDERED FINAL UNLESS ALL SIGNATURES COMPLETED

Prepared in the Office of: SUMMIT DESIGN AND ENGINEERING SERVICES
NC FIRM LICENSE Nos P-0339
504 Meadowlands Drive
Hillsborough, NC 27278
(919) 732-3883
(919) 732-6676 (FAX)

C4	3" S9.5C
D2	4" I19.0C
E3	4½" B25.0C
T	EARTH MATERIAL
U	EXIST. PAVEMENT
W	WEDGING

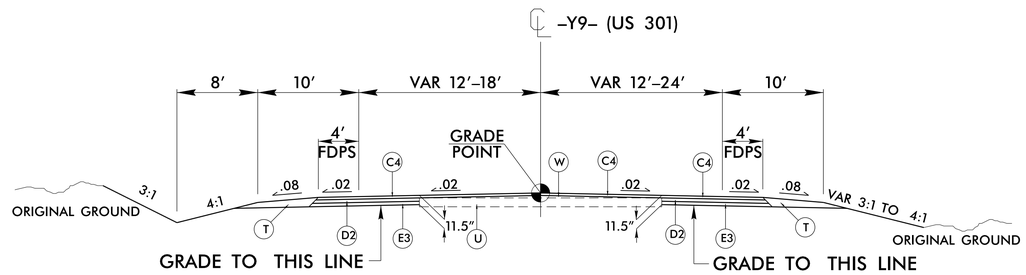

TYPICAL SECTION NO. 16

USE TYPICAL SECTION NO. 16
–Y9– STA 13+00.00 TO 19+13.21
–Y9– STA 20+49.21 TO 24+39.76
–Y9– STA 25+69.76 TO 29+87.86
–Y9– STA 31+23.86 TO 35+50.00

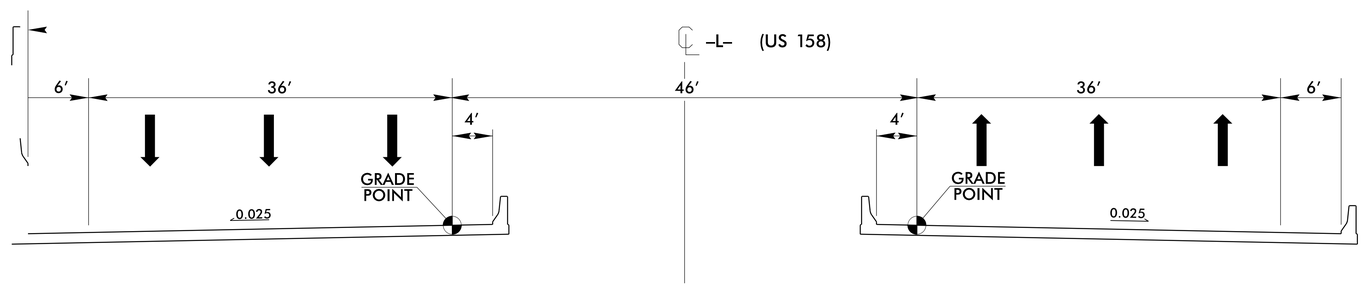

STRUCTURES OVER –Y9–
(16′–6″ VERTICAL CLEARANCE + 6′–1″ SUPERSTRUCTURE DEPTH)

USE STRUCTURES OVER –Y9–
–L– STA 197+87.23 TO 198+93.06

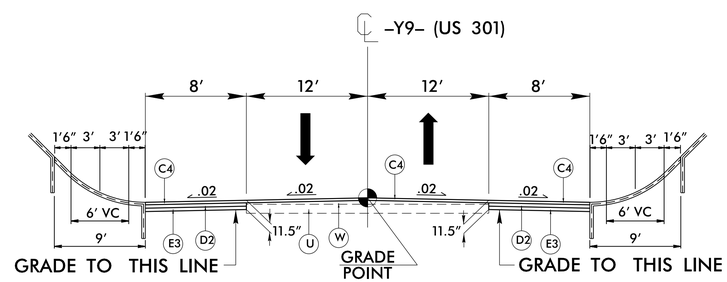

TYPICAL SECTION NO. 17
(SEE ALSO STD 610.03)

USE TYPICAL SECTION NO. 17
–Y9– STA 24+39.76 TO 25+69.76

26-MAR-2019 15:02
R:\Roadway\Proj\sheets\sht2a07.dgn

DocuSign Envelope ID: E6D71254-8E7F-4B69-B663-CC76A4C49C10

PROJECT REFERENCE NO.	SHEET NO.
R-2582A	2A-08

ROADWAY DESIGN ENGINEER	PAVEMENT DESIGN ENGINEER
3/28/2019	3/28/2019
NORTH CAROLINA PROFESSIONAL SEAL 046981 ENGINEER FAITH E. JANKE	NORTH CAROLINA PROFESSIONAL SEAL 038176 ENGINEER SHUHAI ZHANG
DocuSigned by: Faith E. Janke	DocuSigned by: Shuhai Zhang

DOCUMENT NOT CONSIDERED FINAL UNLESS ALL SIGNATURES COMPLETED

Prepared in the Office of: SUMMIT DESIGN AND ENGINEERING SERVICES
NC FIRM LICENSE Nos P-0339
504 Meadowlands Drive
Hillsborough, NC 27278
(919) 732-3883
(919) 732-6676 (FAX)

C4	3" S9.5C
J3	10" ABC
P	.35 PRIME COAT
T	EARTH MATERIAL
U	EXIST. PAVEMENT
W	WEDGING

*SEE SHEETS 2B-02 THRU 2B-07 FOR PROPOSED PAVED SHOULDER WIDTHS

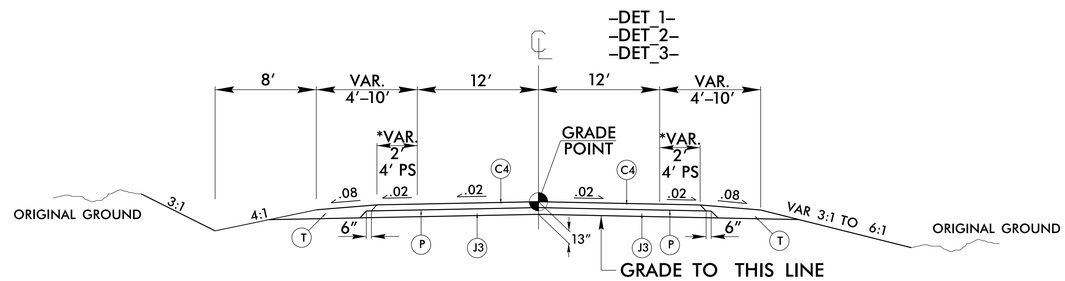

TYPICAL SECTION NO. 18

USE TYPICAL SECTION NO. 18

-DET_1- STA 14+50.00 TO 18+36.33
-DET_2- STA 121+00.00 TO 126+50.00
-DET_3- STA 12+25.00 TO 17+87.86

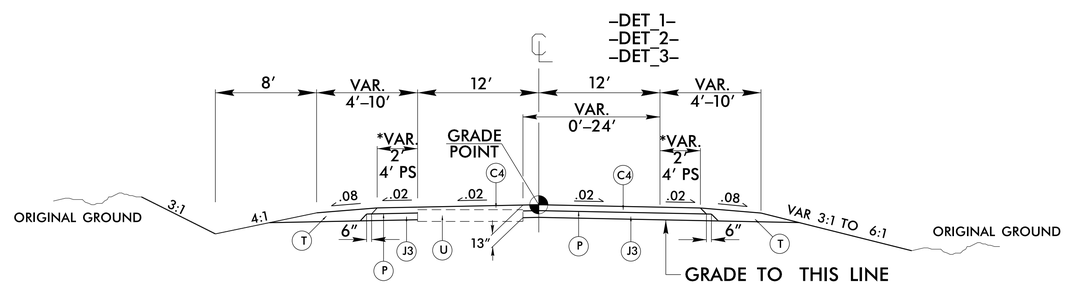

TYPICAL SECTION NO. 19

USE TYPICAL SECTION NO. 19

-DET_1- STA 10+00.00 TO 14+50.00
-DET_2- STA 126+50.00 TO 131+50.00
-DET_3- STA 10+00.00 TO 12+25.00

*USE DET PAVEMENT DESIGN FOR TEMPORARY PAVEMENT SHOWN ON TMP PLANS. SEE TMP PLANS FOR LOCATIONS.

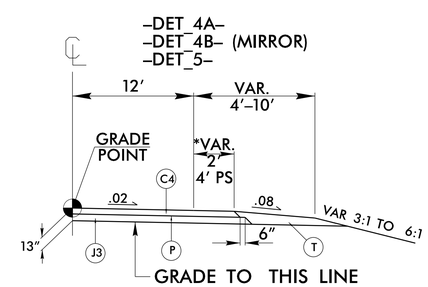

TYPICAL SECTION NO. 20

USE TYPICAL SECTION NO. 20

-DET_4A- STA 175+00 TO 177+36.78
-DET_4B- STA 175+00 TO 182+82.34
-DET_5- STA 245+00 TO 253+45.95

6/2/99
26-MAR-2019 15:02
R:\Roadway\Proj\r2582a_typ.dgn

DocuSign Envelope ID: 82501217-B42B-467C-BD70-B488FE522ABF

6/2/99

MEDIAN GRADE POINT TRANSITION

PROJECT REFERENCE NO.	SHEET NO.
R-2582A	2B-01

ROADWAY DESIGN ENGINEER
3/25/2019

NORTH CAROLINA PROFESSIONAL SEAL 046981 ENGINEER FAITH E. JAHNKE

DocuSigned by:
Faith E. Jahnke
B0228B8CE7C4466...

DOCUMENT NOT CONSIDERED FINAL UNLESS ALL SIGNATURES COMPLETED

Prepared in the Office of:
SUMMIT DESIGN AND ENGINEERING SERVICES
NC FIRM LICENSE Nos P-0339
504 Meadowlands Drive
Hillsborough, NC 27278
(919) 732-3883
(919) 732-6676 (FAX)

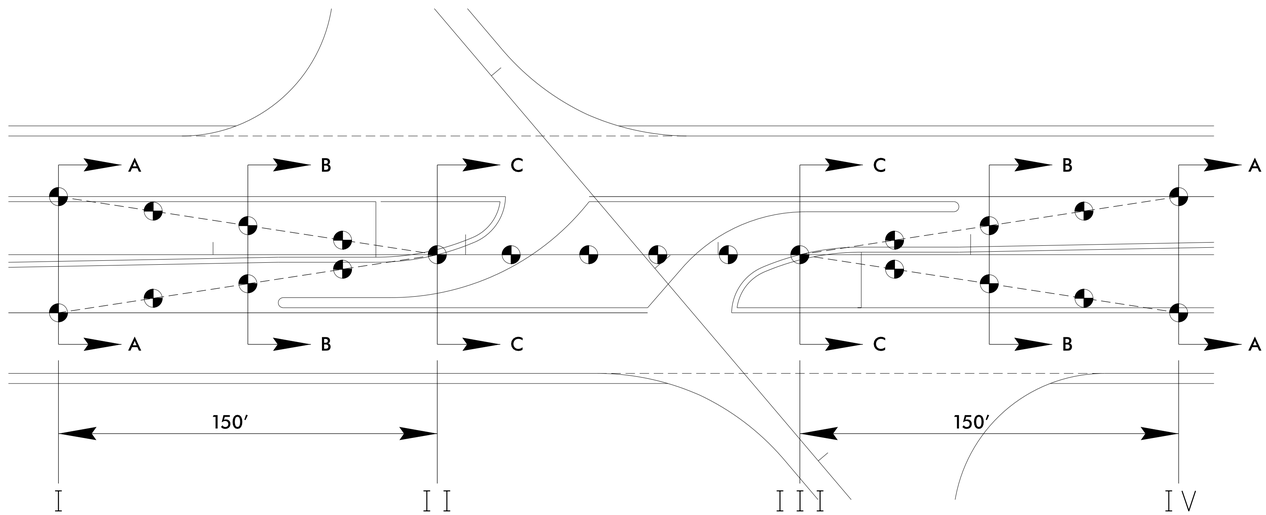

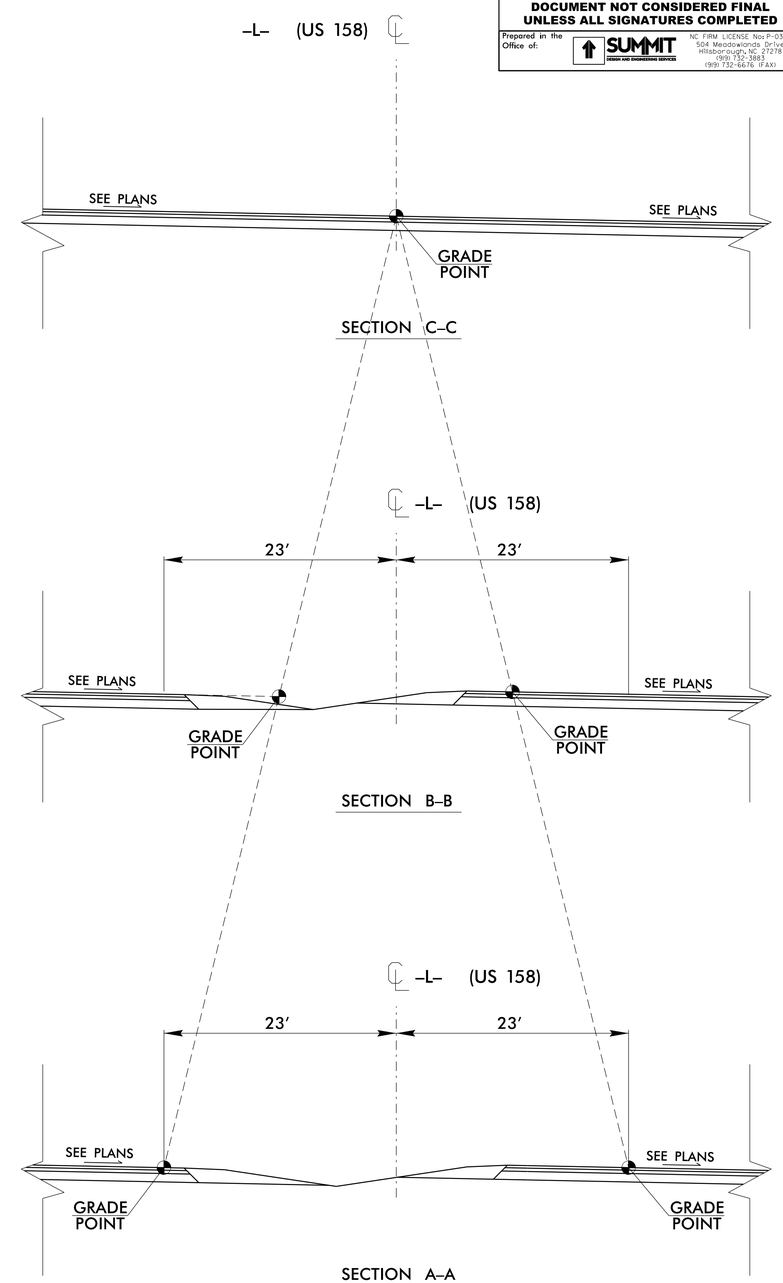

I

–L– STA 58+22.52
–L– STA 90+02.07
–L– STA 131+11.34
–L– STA 146+63.04
–L– STA 153+76.66
–L– STA 264+30.89
–L– STA 274+10.18
–L– STA 315+61.12
–L– STA 323+35.69
–L– STA 332+02.96
–L– STA 375+23.90
–L– STA 432+21.64
–L– STA 440+43.26

II

–L– STA 59+72.52
–L– STA 91+52.07
–L– STA 132+61.34
–L– STA 146+63.04
–L– STA 155+23.66
–L– STA 265+80.89
–L– STA 275+60.18
–L– STA 317+11.12
–L– STA 324+85.69
–L– STA 333+52.96
–L– STA 376+73.90
–L– STA 433+71.64
–L– STA 441+93.26

III

–L– STA 60+19.22
–L– STA 92+71.09
–L– STA 133+06.12
–L– STA 155+70.28
–L– STA 266+25.54
–L– STA 276+06.68
–L– STA 317+57.85
–L– STA 326+31.95
–L– STA 333+92.05
–L– STA 377+95.74
–L– STA 434+14.28
–L– STA 442+36.73

IV

–L– STA 61+69.22
–L– STA 94+21.09
–L– STA 134+56.12
–L– STA 157+20.28
–L– STA 267+75.54
–L– STA 277+56.68
–L– STA 319+07.85
–L– STA 327+81.95
–L– STA 335+42.05
–L– STA 379+45.74
–L– STA 435+64.28
–L– STA 443+86.73

25-MAR-2019 12:14
R:\2582A_Rdy_typ.dgn
sarajenkins

DocuSign Envelope ID: 82501217-B42B-467C-BD70-B488FE522ABF

8/17/99

DETOUR TIE–IN FOR PHASE II (DET_1)

PROJECT REFERENCE NO.	SHEET NO.
R-2582A	2B-02
R/W SHEET NO.	

ROADWAY DESIGN ENGINEER
3/25/2019
NORTH CAROLINA PROFESSIONAL SEAL 046981 ENGINEER FAITH E. JAHNKE
DocuSign envelope ID: 82501217-B42B-467C-BD70-B488FE522ABF
Faith E. Jahnke

HYDRAULICS ENGINEER
3/26/2019
NORTH CAROLINA PROFESSIONAL SEAL 037863 ENGINEER MEME D. BUSCEMI
DocuSign envelope ID: 82501217-B42B-467C-BD70-B488FE522ABF
Meme D. Buscemi

DOCUMENT NOT CONSIDERED FINAL UNLESS ALL SIGNATURES COMPLETED

Prepared in the Office of: SUMMIT DESIGN AND ENGINEERING SERVICES
NC FIRM LICENSE No: P-0339
504 Meadowlands Drive
Hillsborough, NC 27278
(919) 732-3883
(919) 732-6676 (FAX)

DET_1

PI Sta 11+04.03	PI Sta 13+43.82	PI Sta 16+58.52
Δ = 8° 28' 48.9" (LT)	Δ = 3° 23' 25.7" (LT)	Δ = 9° 33' 56.8" (LT)
D = 4° 05' 00.0"	D = 1° 14' 44.0"	D = 2° 41' 01.1"-L-
L = 207.68'	L = 272.20'	L = 356.45'
T = 104.03'	T = 136.14'	T = 178.64'
R = 1,403.16'	R = 4,600.00'	R = 2,135.00'
RO= SEE PLANS	RO= SEE PLANS	RO= SEE PLANS
SE = SEE PLANS	SE = 03	SE = 06

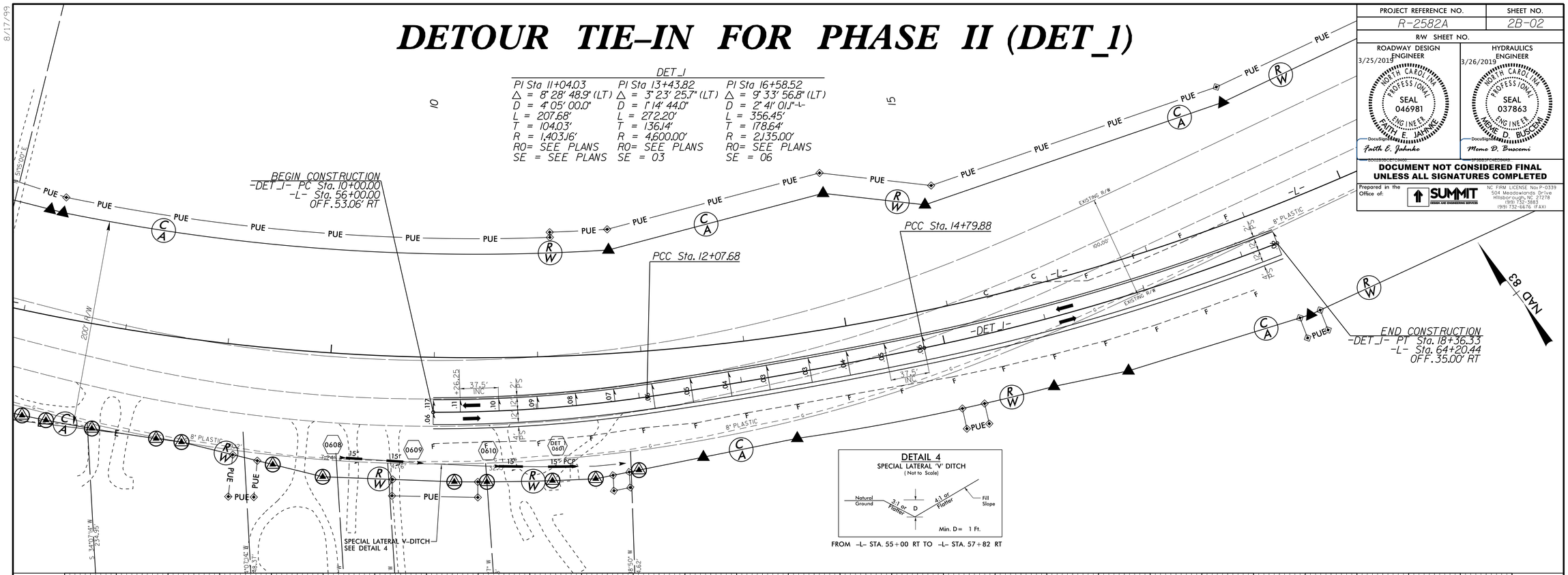

DETAIL 4
SPECIAL LATERAL 'V' DITCH
(Not to Scale)

FROM -L- STA. 55+00 RT TO -L- STA. 57+82 RT

-DET_1-

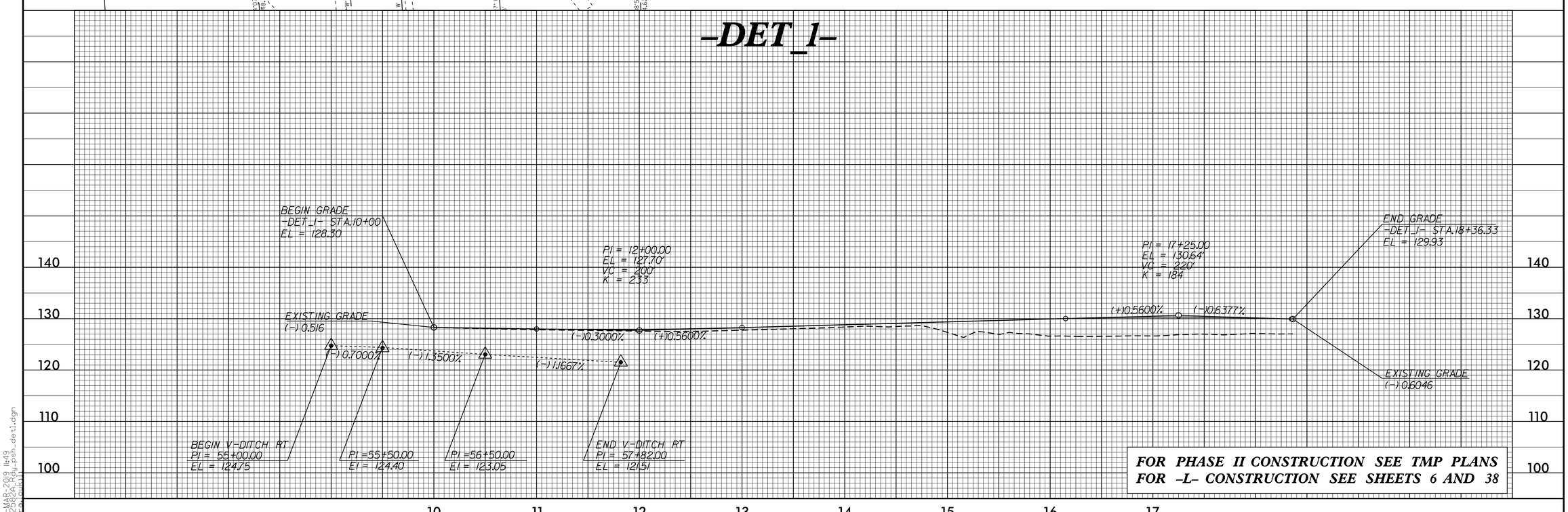

FOR PHASE II CONSTRUCTION SEE TMP PLANS
FOR -L- CONSTRUCTION SEE SHEETS 6 AND 38

25-MAR-2019 11:49
R:\Roadway\Proj\r2582a_det1.dgn

DocuSign Envelope ID: 82501217-B42B-467C-BD70-B488FE522ABF

DETOUR TIE IN FOR PHASE II (DET_2)

PROJECT REFERENCE NO.	SHEET NO.
R-2582A	2B-03
R/W SHEET NO.	

ROADWAY DESIGN ENGINEER
3/25/2019
NORTH CAROLINA PROFESSIONAL SEAL 046981 ENGINEER FAITH E. JAHANKE
DocuSigned by: Faith E. Jahanke

HYDRAULICS ENGINEER
3/26/2019
NORTH CAROLINA PROFESSIONAL SEAL 037863 ENGINEER MEME D. BUSCEMI
DocuSigned by: Meme D. Buscemi

DOCUMENT NOT CONSIDERED FINAL UNLESS ALL SIGNATURES COMPLETED

Prepared in the Office of: SUMMIT DESIGN AND ENGINEERING SERVICES
NC FIRM LICENSE No: P-0339
504 Meadowlands Drive
Hillsborough, NC 27278
(919) 732-3883
(919) 732-6676 (FAX)

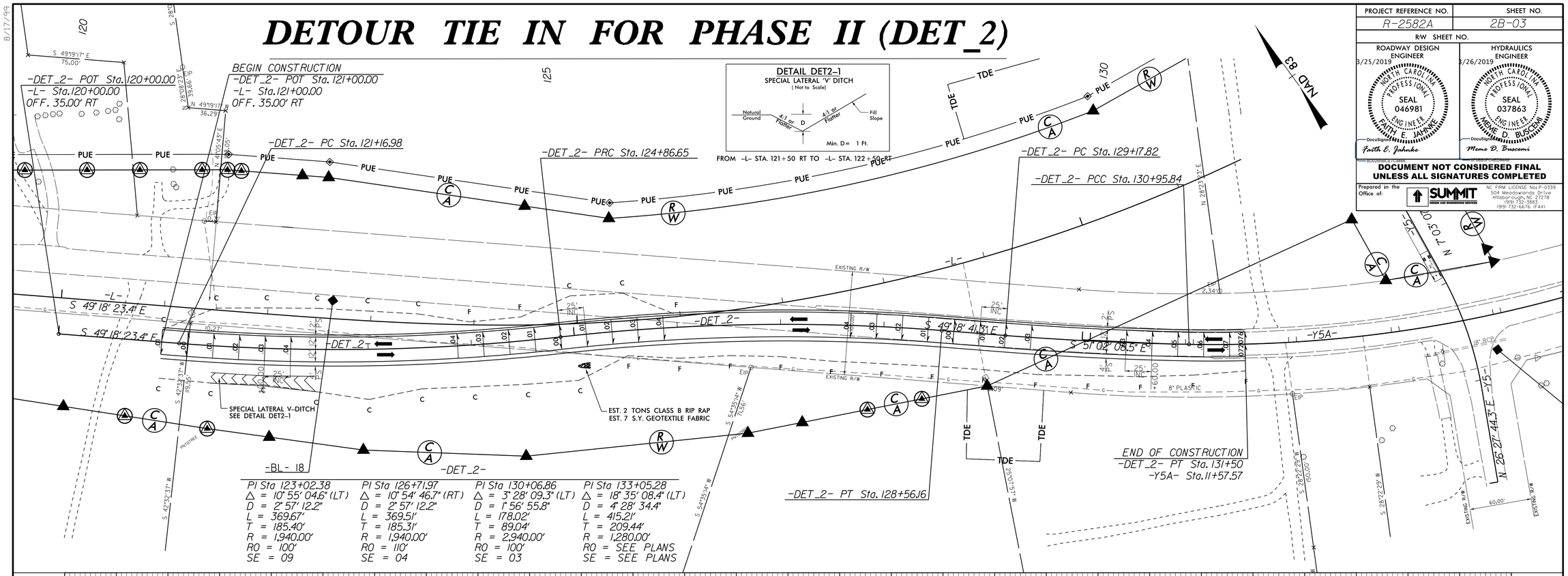

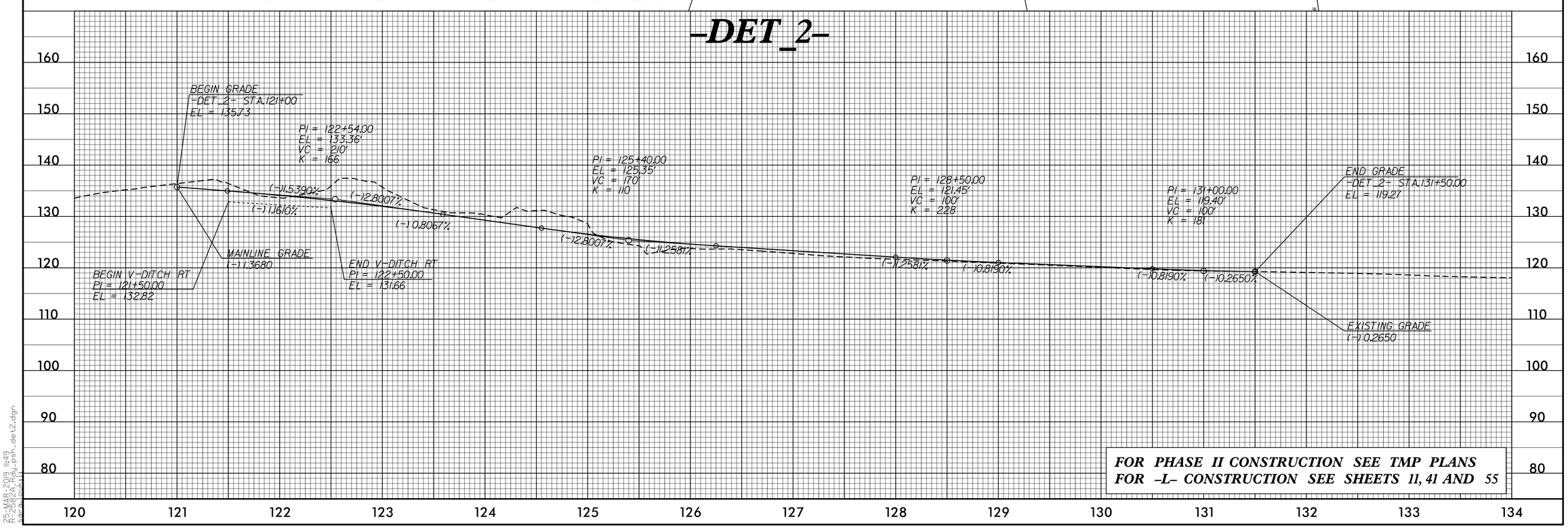

FOR PHASE II CONSTRUCTION SEE TMP PLANS
FOR -L- CONSTRUCTION SEE SHEETS 11, 41 AND 55

25-MAR-2019 11:49
R:\Roadway\Proj\R2582A_rdy_psh_det2.dgn
sarahlokey

DocuSign Envelope ID: 82501217-B42B-467C-BD70-B488FE522ABF

DETOUR TIE–IN FOR PHASE II (DET_3)

PROJECT REFERENCE NO.	SHEET NO.
R-2582A	2B-04

R/W SHEET NO.

ROADWAY DESIGN ENGINEER
3/25/2019
NORTH CAROLINA PROFESSIONAL SEAL 046981 ENGINEER FAITH E. JAHNKE
DocuSign Envelope ID: 82501217-B42B-467C-BD70-B488FE522ABF
Faith E. Jahnke

HYDRAULICS ENGINEER
3/26/2019
NORTH CAROLINA PROFESSIONAL SEAL 037863 ENGINEER MEMO D. BUSCEMI
DocuSign Envelope ID: 82501217-B42B-467C-BD70-B488FE522ABF
Memo D. Buscemi

DOCUMENT NOT CONSIDERED FINAL UNLESS ALL SIGNATURES COMPLETED

Prepared in the Office of: SUMMIT DESIGN AND ENGINEERING SERVICES
NC FIRM LICENSE No: P-0339
504 Meadowlands Drive
Hillsborough, NC 27278
(919) 732-3883
(919) 732-6676 (FAX)

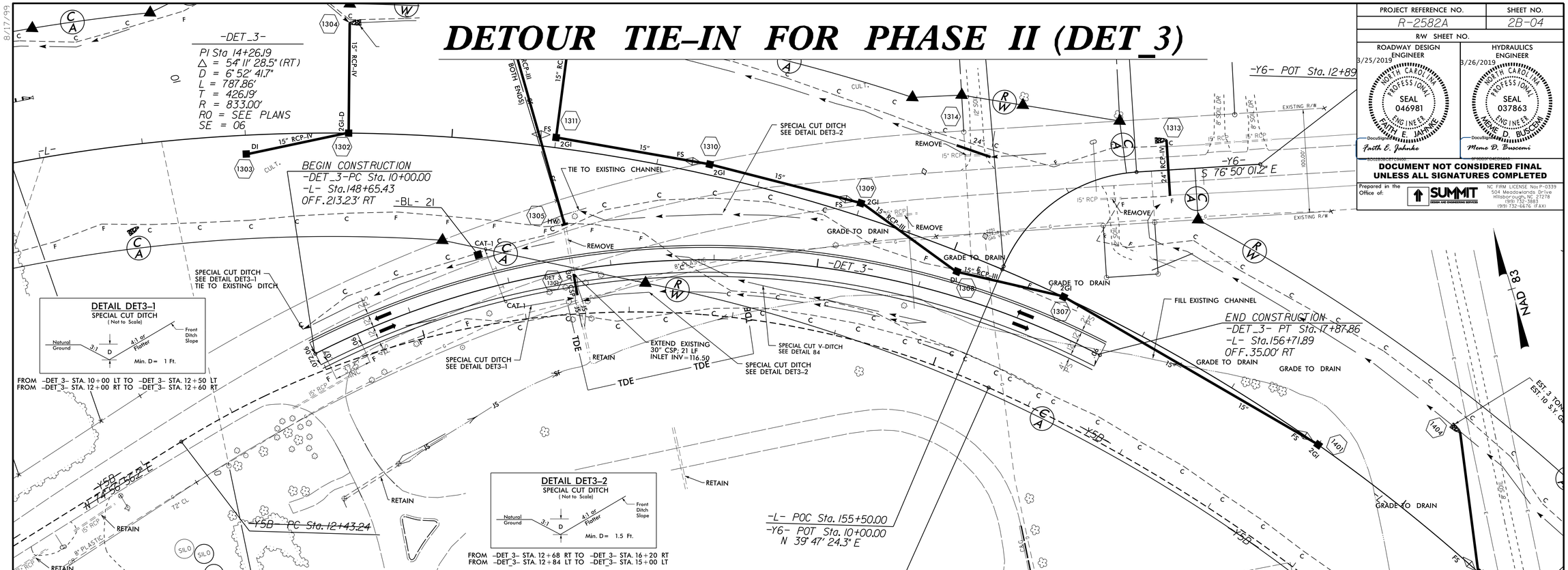

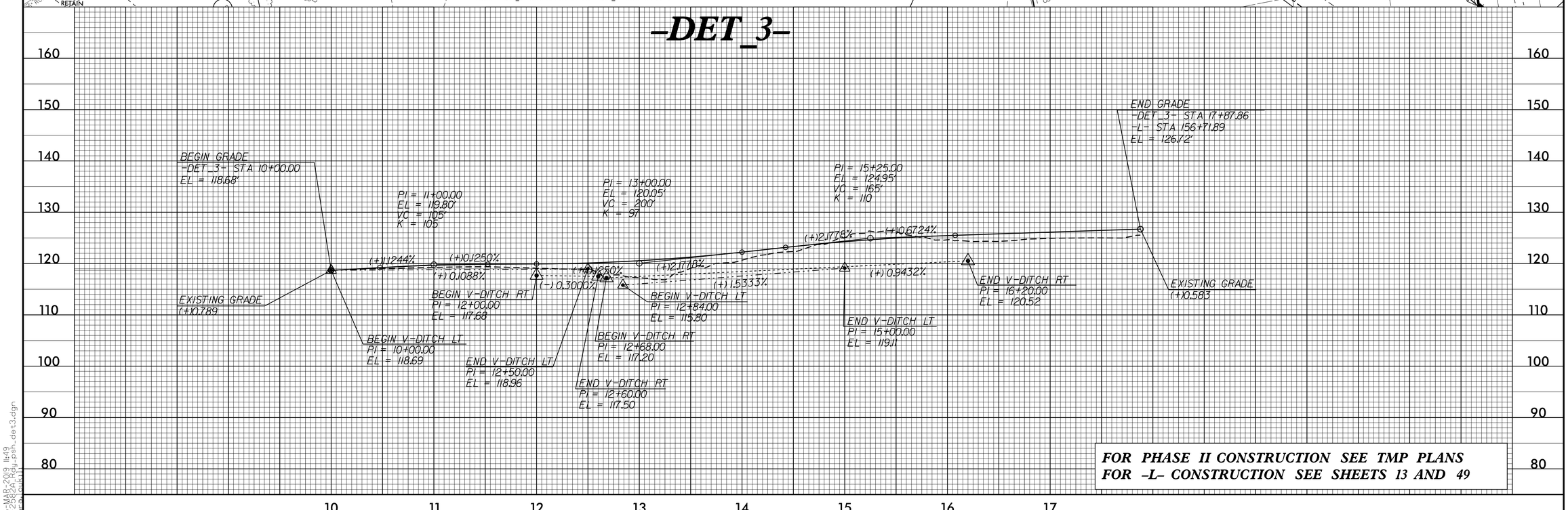

FOR PHASE II CONSTRUCTION SEE TMP PLANS
FOR –L– CONSTRUCTION SEE SHEETS 13 AND 49

8/17/99

25-MAR-2019 11:49
R:\Roadway\Proj\R2582a_rdy_psh_det3.dgn
sarojolkin

DocuSign Envelope ID: 82501217-B42B-467C-BD70-B488FE522ABF

8/17/99

DETOUR X-OVER FOR PHASE III (DET_4A)

PROJECT REFERENCE NO.	SHEET NO.
R-2582A	2B-05
R/W SHEET NO.	

ROADWAY DESIGN ENGINEER
3/25/2019
NORTH CAROLINA PROFESSIONAL SEAL 046981 ENGINEER FAITH E. JAHNKE
DocuSigned by: Faith E. Jahnke
5D0D2B0C1D4B4D...

HYDRAULICS ENGINEER
3/26/2019
NORTH CAROLINA PROFESSIONAL SEAL 037863 ENGINEER MEME D. BUSCEMI
DocuSigned by: Meme D. Buscemi
5F4A0A0A2C2D4C...

DOCUMENT NOT CONSIDERED FINAL UNLESS ALL SIGNATURES COMPLETED

Prepared in the Office of: SUMMIT DESIGN AND ENGINEERING SERVICES
NC FIRM LICENSE No: P-0339
504 Meadowlands Drive
Hillsborough, NC 27278
(919) 732-3883
(919) 732-6676 (FAX)

BEGIN CONSTRUCTION
-DET_4A- PC Sta. 175+00.00
-L- Sta. 175+00.00
OFF. 35.00' LT

-DET_4A-

PI Sta 176+20.14	PI Sta 181+60.06
Δ = 5° 23' 41.5" (RT)	Δ = 18° 42' 14.5" (LT) Δ
D = 2° 14' 48.8"	D = 2° 14' 48.8"
L = 240.10'	L = 832.44'
T = 120.14'	T = 419.96'
R = 2,550.00'	R = 2,550.00'
RO = SEE PLANS	RO = SEE PLANS
SE = SEE PLANS	SE = 04

-DET_4A- PRC Sta. 177+40.10

SPECIAL LATERAL V-DITCH
SEE DETAIL 4A-1

END CONSTRUCTION
-DET_4A- PT Sta. 185+72.54
-L- Sta. 185+69.19
OFF. 23.00' RT

NAD 83

S 45°22'43" W
1138.30'

DETAIL 4A-1
SPECIAL LATERAL 'V' DITCH
(Not to Scale)

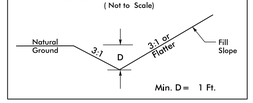

FROM -DET_4A- STA. 177 + 50 RT TO -DET_4A- STA. 182 + 50 RT

-DET_4A-

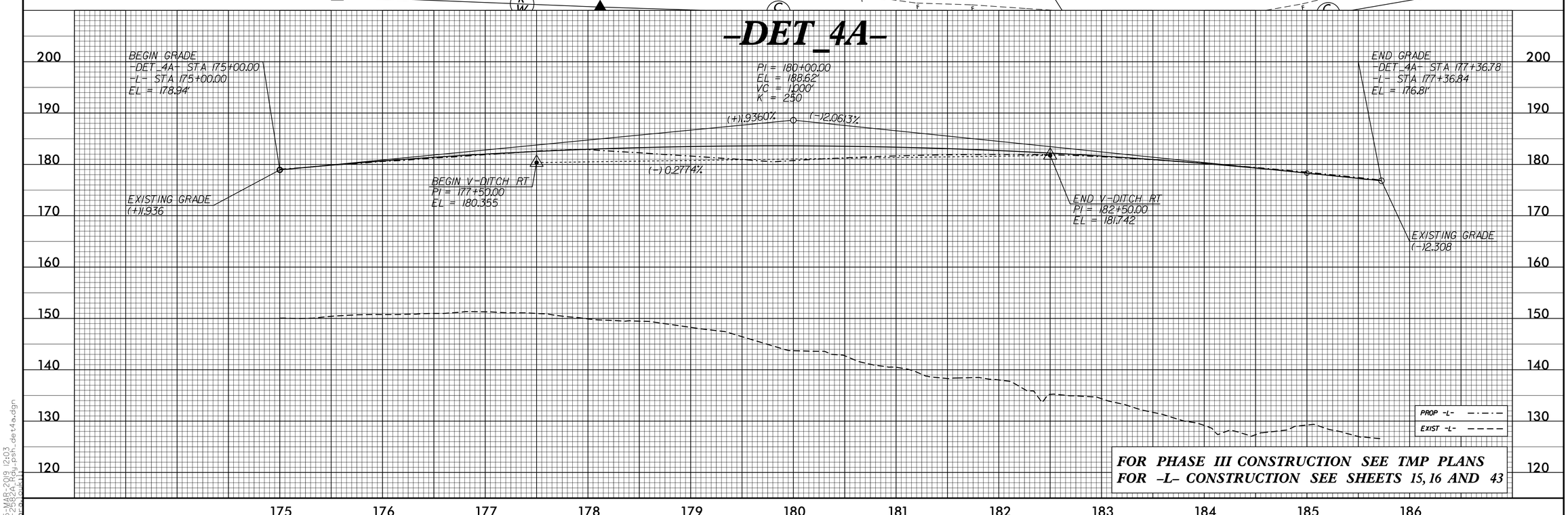

FOR PHASE III CONSTRUCTION SEE TMP PLANS
FOR -L- CONSTRUCTION SEE SHEETS 15, 16 AND 43

25-MAR-2019 12:03
R2582A_RD_02_PS1_det4a.dgn
sarajenkins

DocuSign Envelope ID: 82501217-B42B-467C-BD70-B488FE522ABF

8/17/99

DETOUR X-OVER FOR PHASE II (DET_4B)

PROJECT REFERENCE NO.	SHEET NO.
R-2582A	2B-06
R/W SHEET NO.	

ROADWAY DESIGN ENGINEER
3/25/2019
NORTH CAROLINA PROFESSIONAL SEAL 046981 ENGINEER FAITH E. JAHNKE
DocuSign Envelope ID: 82501217-B42B-467C-BD70-B488FE522ABF
Faith E. Jahnke

HYDRAULICS ENGINEER
3/26/2019
NORTH CAROLINA PROFESSIONAL SEAL 037863 ENGINEER MEME D. BUSCEMI
DocuSign Envelope ID: 82501217-B42B-467C-BD70-B488FE522ABF
Meme D. Buscemi

DOCUMENT NOT CONSIDERED FINAL UNLESS ALL SIGNATURES COMPLETED

Prepared in the Office of: SUMMIT DESIGN AND ENGINEERING SERVICES
NC FIRM LICENSE No: P-0339
504 Meadowlands Drive
Hillsborough, NC 27278
(919) 732-3883
(919) 732-6676 (FAX)

-DET_4B-

PI Sta 177+96.64
△ = 13° 16' 15.1" (LT)
D = 2° 14' 48.8"
L = 590.63'
T = 296.64'
R = 2,550.00'
RO = SEE PLANS
SE = 04

PI Sta 181+86.53
△ = 4° 18' 26.7" (RT)
D = 2° 14' 48.8"
L = 191.71'
T = 95.90'
R = 2,550.00'
RO = SEE PLANS
SE = SEE PLANS

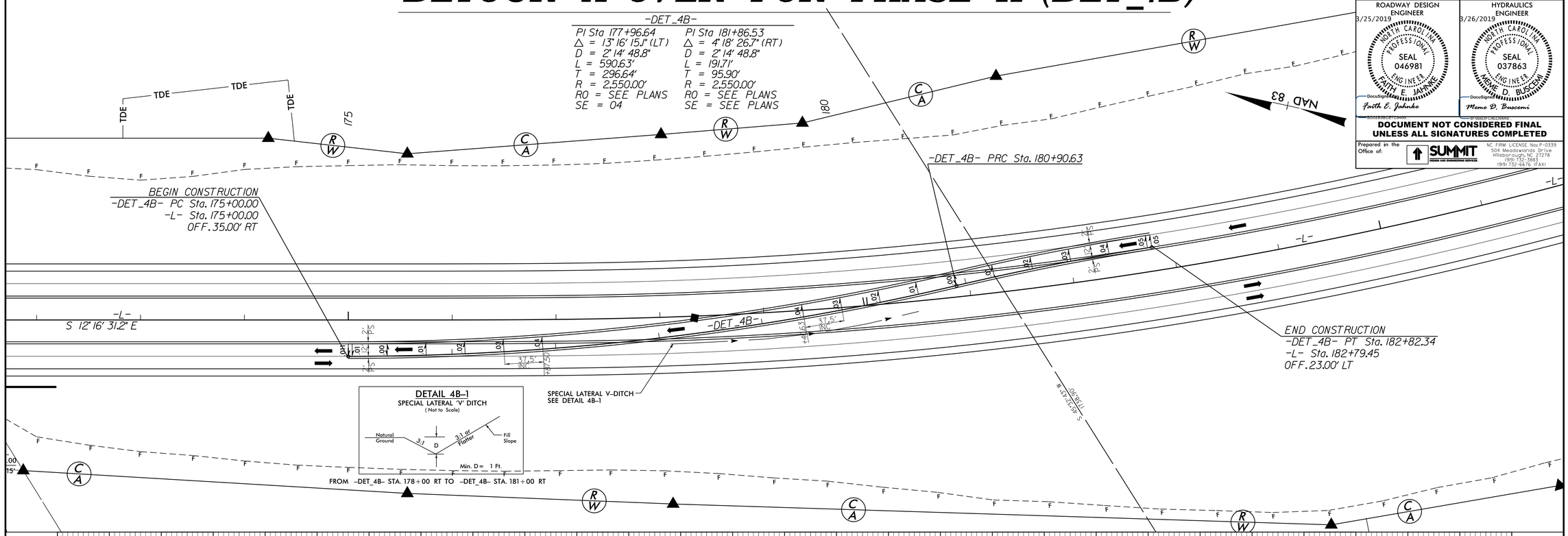

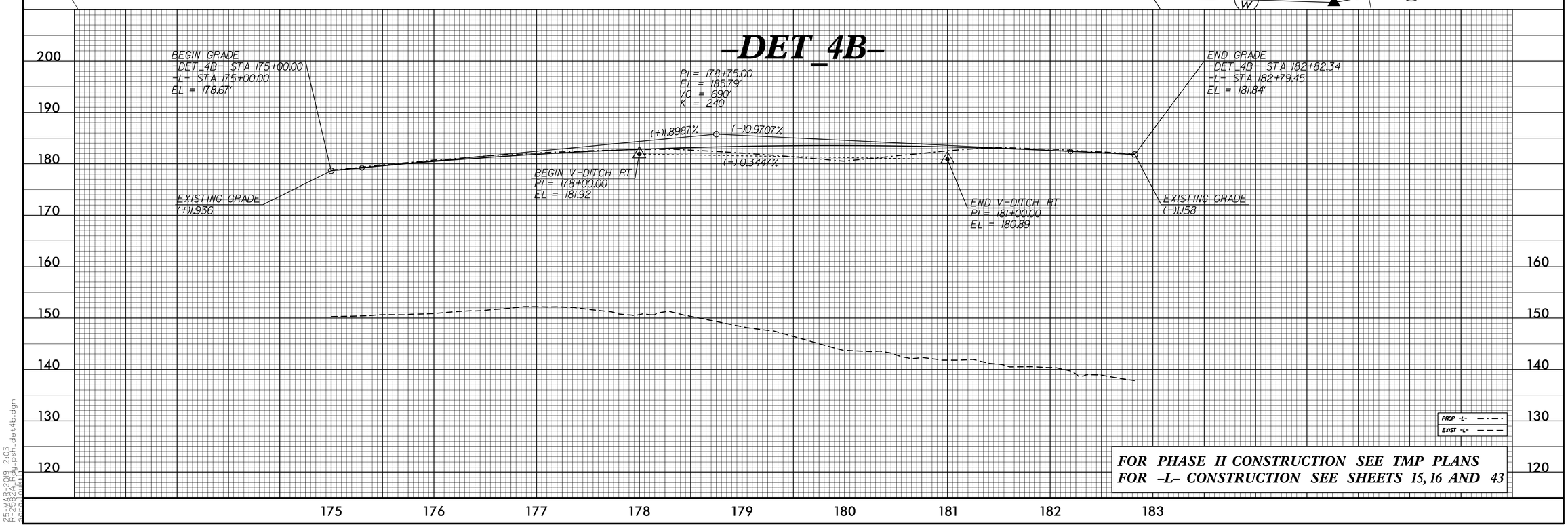

FOR PHASE II CONSTRUCTION SEE TMP PLANS
FOR -L- CONSTRUCTION SEE SHEETS 15, 16 AND 43

25-MAR-2019 12:03
R:\Roadway\Proj\R2582A_det4b.dgn

DocuSign Envelope ID: 82501217-B42B-467C-BD70-B488FE522ABF

DETOUR X-OVER FOR PHASE II (DET_5)

PROJECT REFERENCE NO.	SHEET NO.
R-2582A	2B-07
R/W SHEET NO.	

ROADWAY DESIGN ENGINEER
3/25/2019
NORTH CAROLINA PROFESSIONAL SEAL 046981 ENGINEER FAITH E. JAHNKE
DocuSign Envelope ID: Faith E. Jahnke

HYDRAULICS ENGINEER
3/26/2019
NORTH CAROLINA PROFESSIONAL SEAL 037863 ENGINEER MEME D. BUSCEMI
DocuSign Envelope ID: Meme D. Buscemi

DOCUMENT NOT CONSIDERED FINAL UNLESS ALL SIGNATURES COMPLETED

Prepared in the Office of: SUMMIT DESIGN AND ENGINEERING SERVICES
NC FIRM LICENSE No: P-0339
504 Meadowlands Drive
Hillsborough, NC 27278
(919) 732-3883
(919) 732-6676 (FAX)

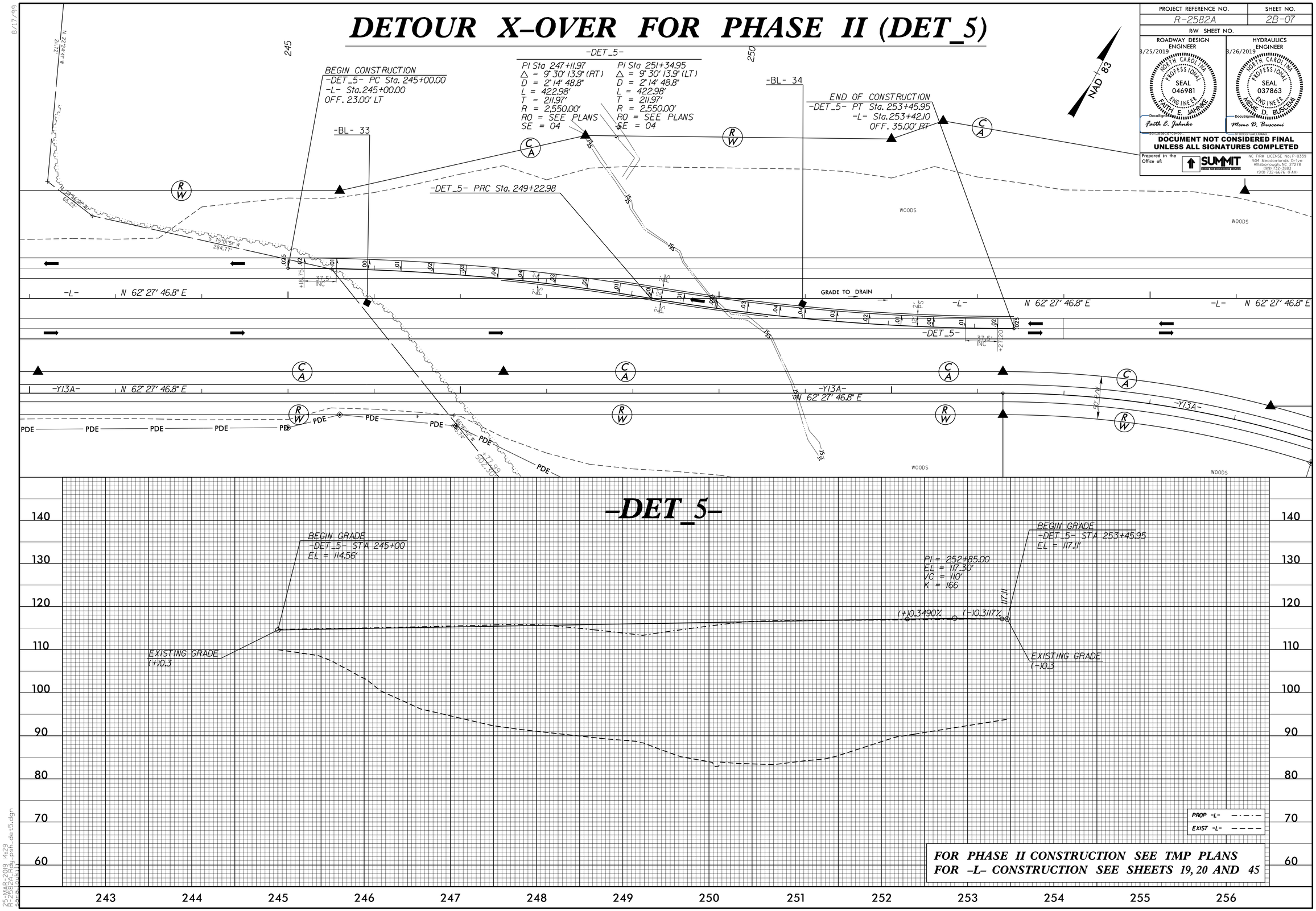

DocuSign Envelope ID: CF5392BE-22A6-40C8-805D-DCAF0CEA4DA6

8/17/99

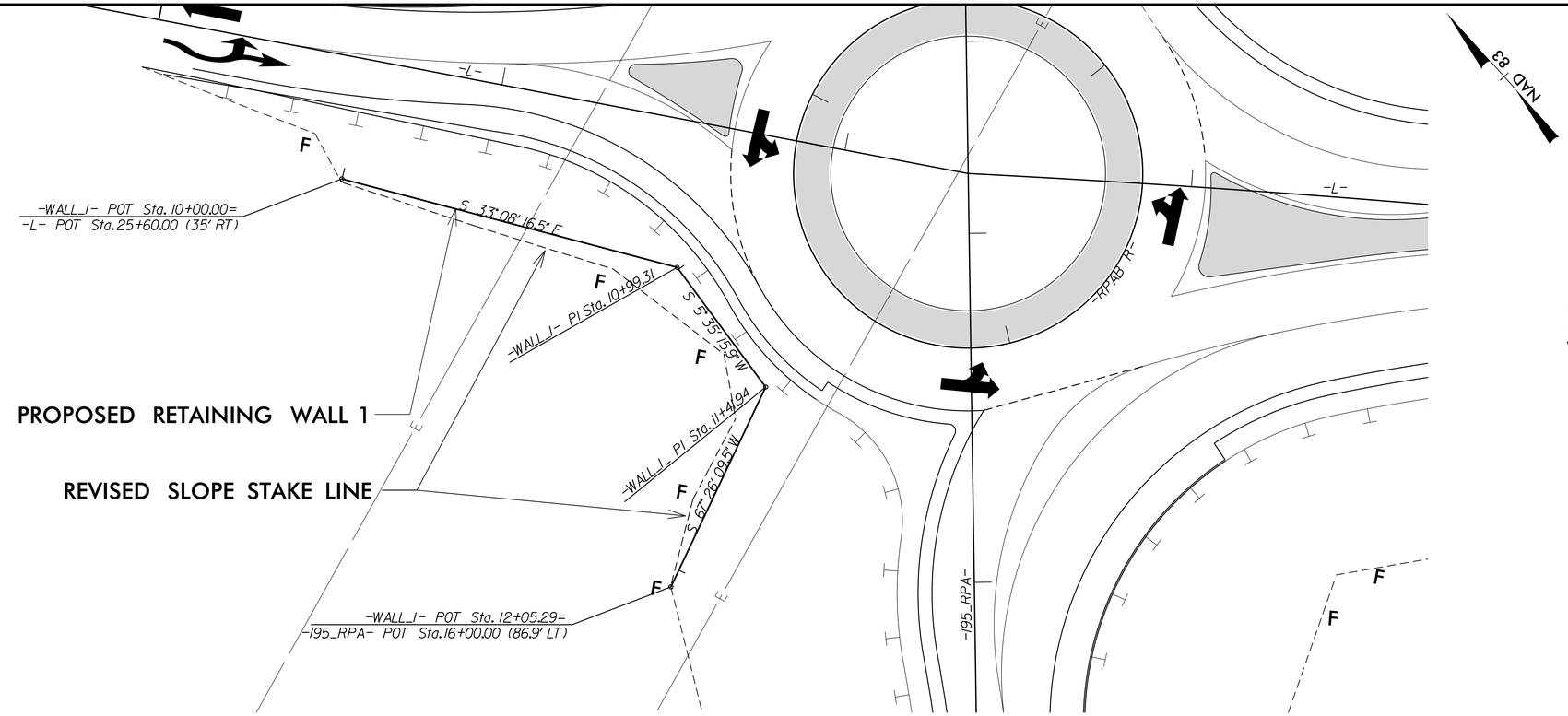

PROJECT REFERENCE NO.	SHEET NO.
R-2582A	2B-8
R/W SHEET NO.	

ROADWAY DESIGN ENGINEER

4/5/2019

NORTH CAROLINA PROFESSIONAL SEAL 046981 ENGINEER FAITH E. JAHNKE

DocuSigned by: Faith E. Jahnke

DOCUMENT NOT CONSIDERED FINAL UNLESS ALL SIGNATURES COMPLETED

Prepared in the Office of: SUMMIT DESIGN AND ENGINEERING SERVICES

NC FIRM LICENSE No: P-0339
504 Meadowlands Drive
Hillsborough, NC 27278
(919) 732-3883
(919) 732-6676 (FAX)

FOR RETAINING WALL PLANS SEE SHEET W-1 THRU W-4

FOR -L- CONSTRUCTION SEE SHEET 4 AND 37.

05-APR-2019 08:43
R2582A_RD_DES_Wall_1.dgn
faith.jahnke

DocuSign Envelope ID: 82501217-B42B-467C-BD70-B488FE522ABF

8/17/99

PROJECT REFERENCE NO.	SHEET NO.
R-2582A	2B-9
R/W SHEET NO.	

ROADWAY DESIGN ENGINEER
3/25/2019
NORTH CAROLINA PROFESSIONAL SEAL 046981 ENGINEER FAITH E. JAHNKE
DocuSigned: Faith E. Jahnke
BOUNDSBERRY CHARD

DOCUMENT NOT CONSIDERED FINAL UNLESS ALL SIGNATURES COMPLETED

Prepared in the Office of: SUMMIT DESIGN AND ENGINEERING SERVICES
NC FIRM LICENSE No: P-0339
504 Meadowlands Drive
Hillsborough, NC 27278
(919) 732-3883
(919) 732-6676 (FAX)

DETAIL FOR U-TURN BULB

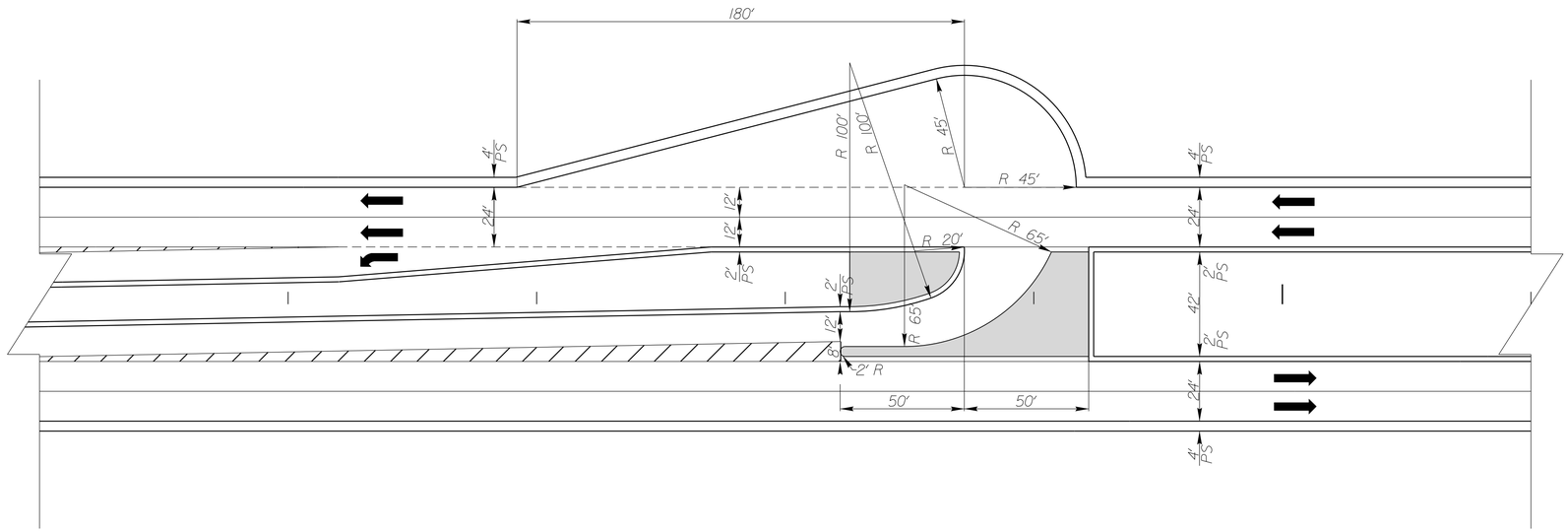

GRAPHIC SCALES

30 15 0 30 60

PLANS

FOR PLAN VIEW SEE SHEETS: 6, 13, 24, 25, 33

DETAIL FOR DOUBLE U-TURN BULB

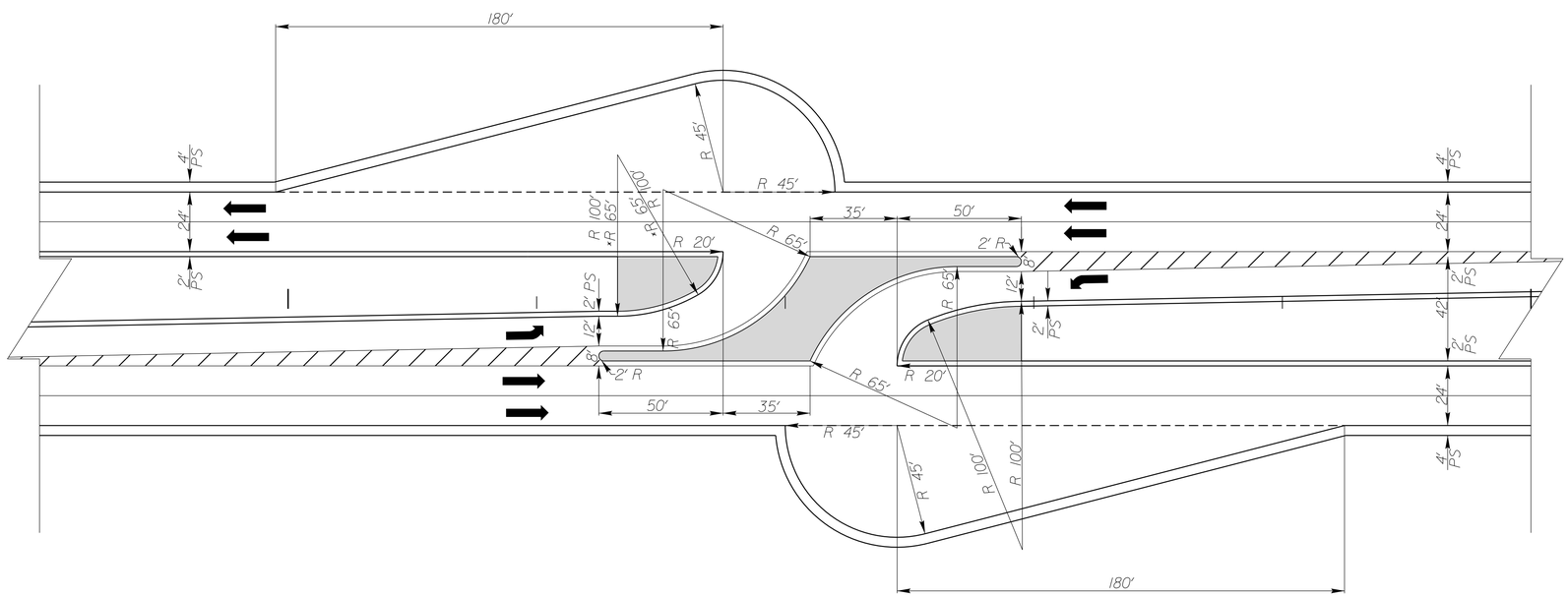

FOR PLAN VIEW SEE SHEETS: 8*, 9*, 28, 29

25-MAR-2019 14:45
R-2582A_Rdy_Detail2B-9.dgn

DocuSign Envelope ID: 82501217-B42B-467C-BD70-B488FE522ABF

8/17/99

PROJECT REFERENCE NO.	SHEET NO.
R-2582A	2B-10
R/W SHEET NO.	

ROADWAY DESIGN ENGINEER
3/25/2019
NORTH CAROLINA PROFESSIONAL SEAL 046981 ENGINEER FAITH E. JAHNKE
DocuSigned by: Faith E. Jahnke

DOCUMENT NOT CONSIDERED FINAL UNLESS ALL SIGNATURES COMPLETED

Prepared in the Office of: SUMMIT DESIGN AND ENGINEERING SERVICES
NC FIRM LICENSE No: P-0339
504 Meadowlands Drive
Hillsborough, NC 27278
(919) 732-3883
(919) 732-6676 (FAX)

NAD 83

GRAPHIC SCALES

30′ 15′ 0 30′ 60′

PLANS

FOR ALIGNMENTS SEE SHEET 4

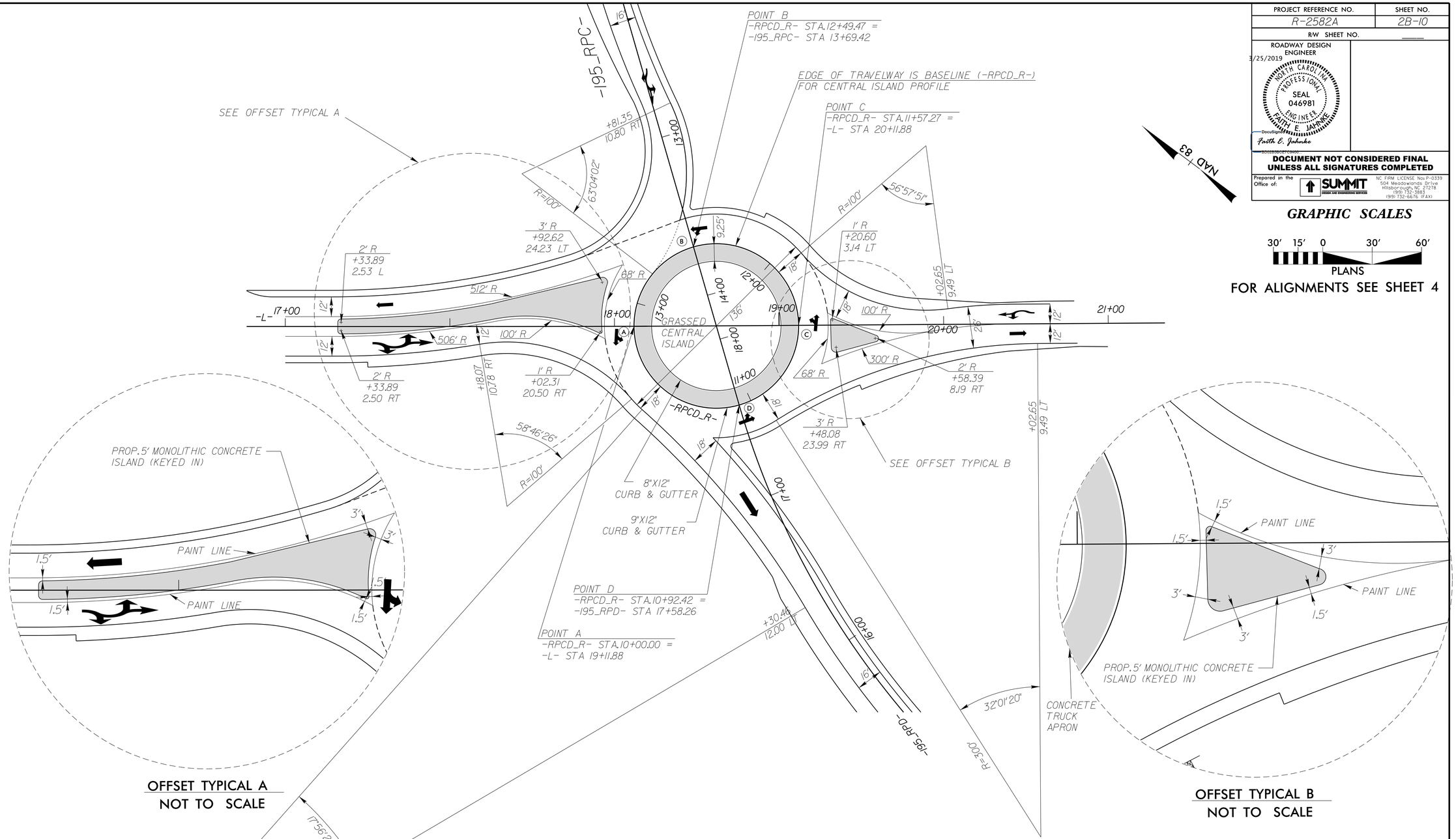

OFFSET TYPICAL A
NOT TO SCALE

OFFSET TYPICAL B
NOT TO SCALE

INTERSECTION DETAIL
–L–, –I95_RPC–, –I95RPD– AND ROUNDABOUT –RPCD_R–

25-MAR-2019 14:45
R-2582A_PB_01_2B-10.dgn

DocuSign Envelope ID: 82501217-B42B-467C-BD70-B488FE522ABF

INTERSECTION DETAIL –L–, –I95_RPB–, –I95RPA– AND ROUNDABOUT –RPAB_R–

PROJECT REFERENCE NO.	SHEET NO.
R-2582A	2B-11
R/W SHEET NO.	

ROADWAY DESIGN ENGINEER
3/25/2019
NORTH CAROLINA PROFESSIONAL SEAL 046981 ENGINEER FAITH E. JAHNKE
DocuSigned by: Faith E. Jahnke
82C2B8BC0F4C4D0...

DOCUMENT NOT CONSIDERED FINAL UNLESS ALL SIGNATURES COMPLETED

Prepared in the Office of: SUMMIT DESIGN AND ENGINEERING SERVICES
NC FIRM LICENSE No: P-0339
504 Meadowlands Drive
Hillsborough, NC 27278
(919) 732-3883
(919) 732-6676 (FAX)

NAD 83

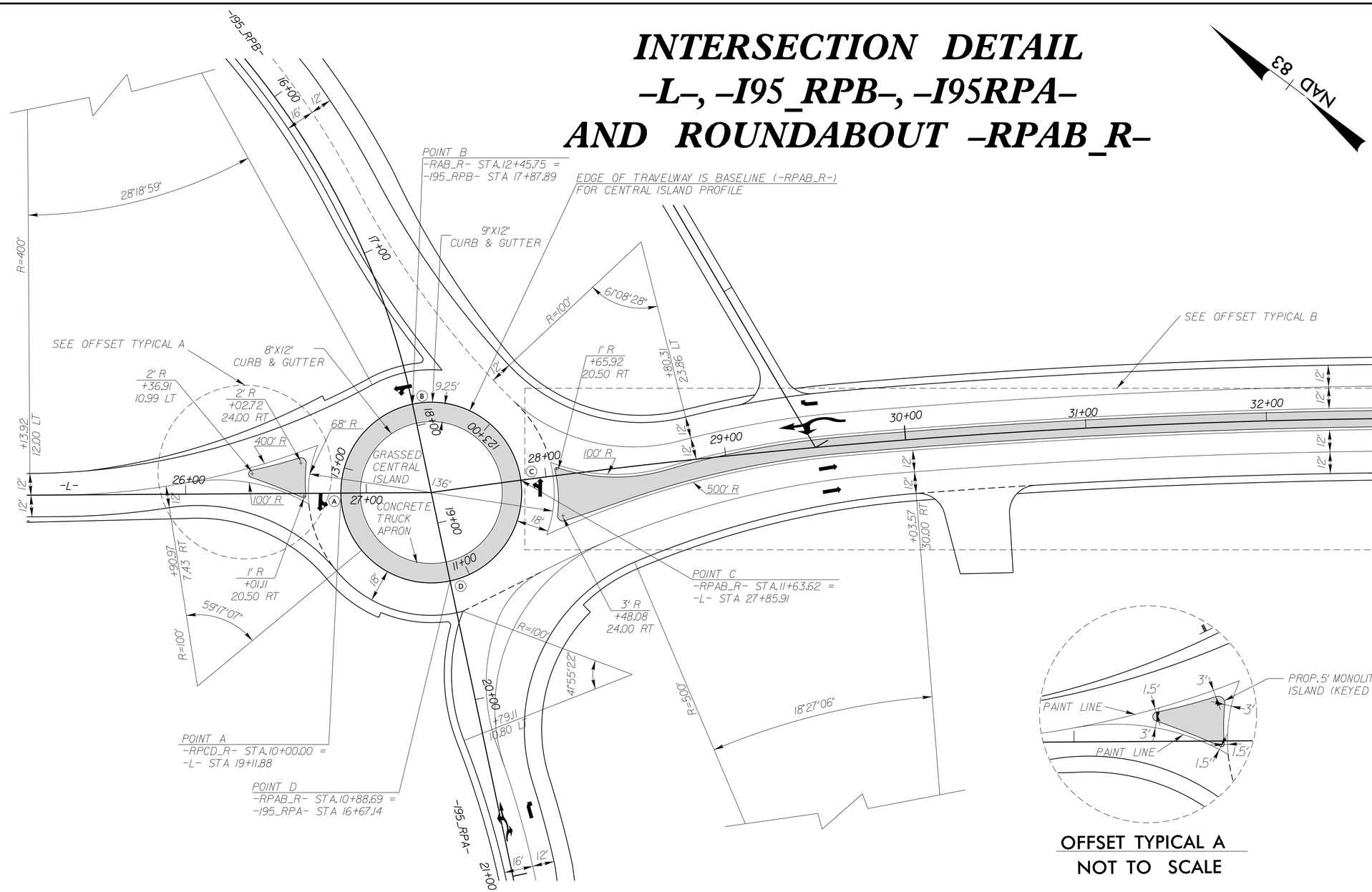

GRAPHIC SCALES

30' 15' 0 30' 60'

PLANS

FOR ALIGMENTS SEE SHEET 16

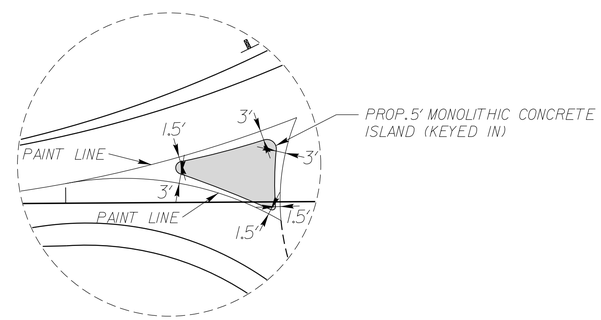

OFFSET TYPICAL A
NOT TO SCALE

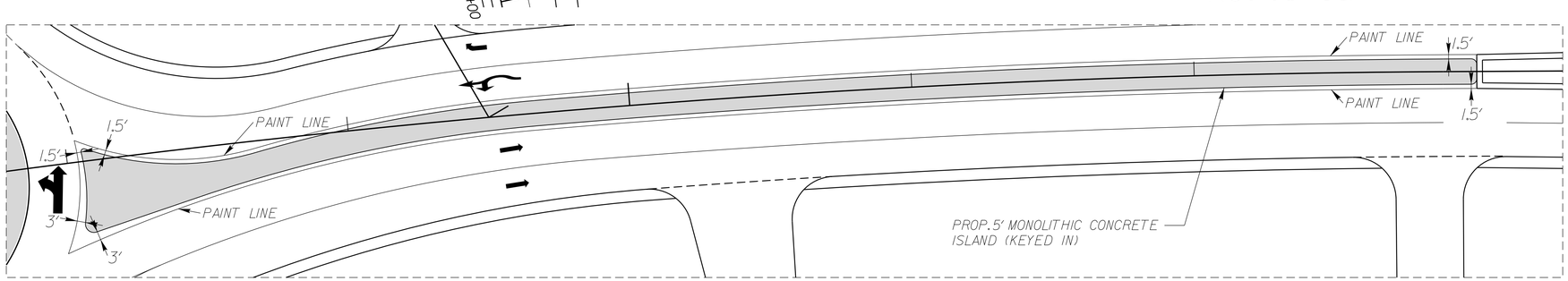

OFFSET TYPICAL B
NOT TO SCALE

25-MAR-2019 14:45
R:\Roadway\Proj\R2582A_sheet2B-11.dgn
sarajaiokiii

DocuSign Envelope ID: 82501217-B42B-467C-BD70-B488FE522ABF

PROJECT REFERENCE NO.	SHEET NO.
R-2582A	2B-12
R/W SHEET NO.	

ROADWAY DESIGN ENGINEER
3/25/2019
NORTH CAROLINA PROFESSIONAL SEAL 046981 ENGINEER FAITH E. JAHANKE
DocuSigned by: Faith E. Jahanke
8D0028B07C0A4B0...

DOCUMENT NOT CONSIDERED FINAL UNLESS ALL SIGNATURES COMPLETED

Prepared in the Office of: SUMMIT DESIGN AND ENGINEERING SERVICES
NC FIRM LICENSE No: P-0339
504 Meadowlands Drive
Hillsborough, NC 27278
(919) 732-3883
(919) 732-6676 (FAX)

INTERSECTION -L- WITH -Y3-
SEE PSH 5

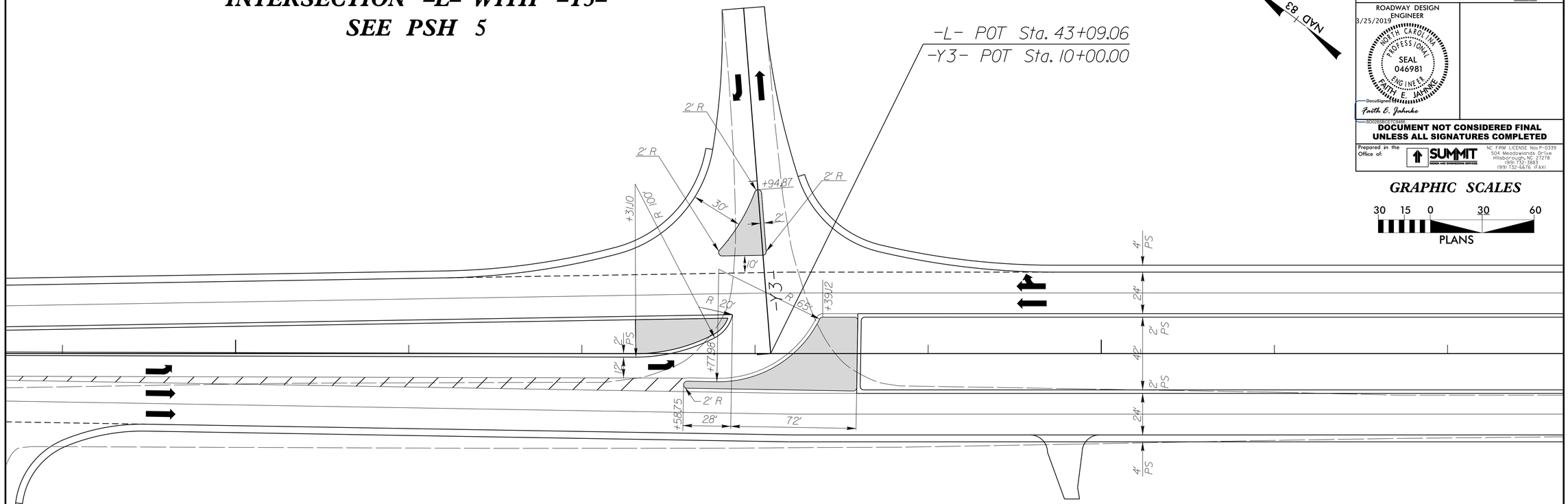

GRAPHIC SCALES

30 15 0 30 60
PLANS

INTERSECTION -L- WITH -Y5-
SEE PSH 12

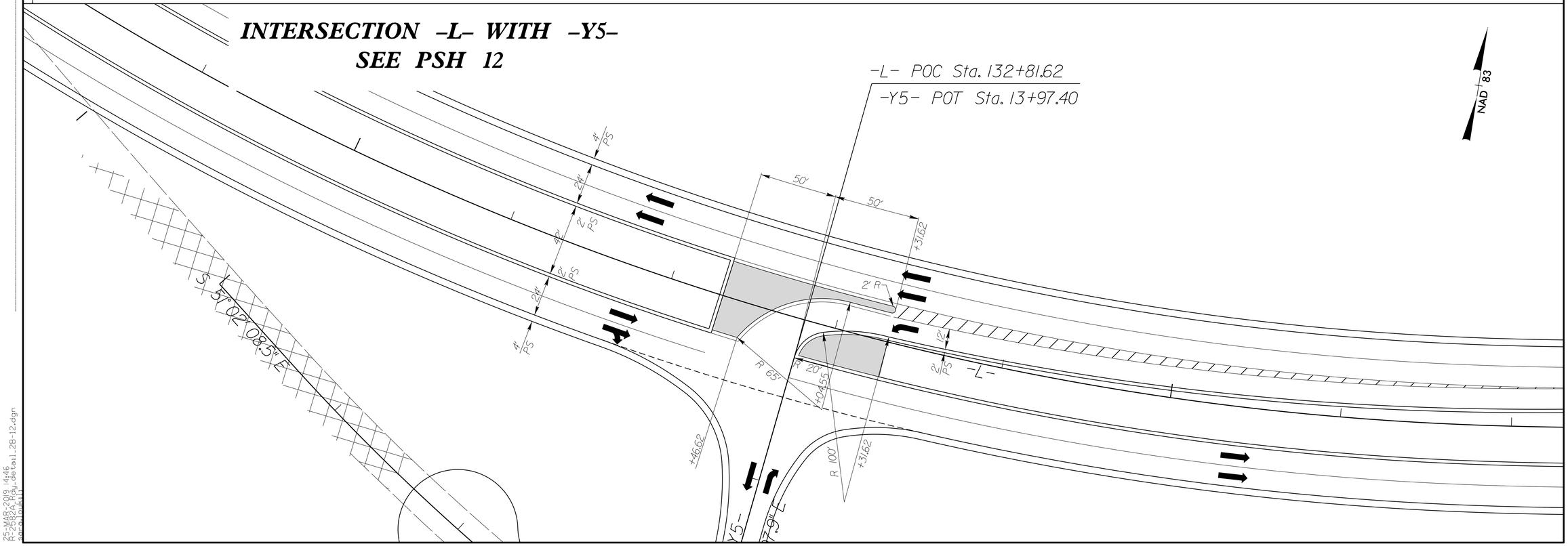

25-MAR-2019 14:46
R:\Roadway\Proj\R2582a_sht2B-12.dgn
ppatelouki1

DocuSign Envelope ID: 82501217-B42B-467C-BD70-B488FE522ABF

PROJECT REFERENCE NO.	SHEET NO.
R-2582A	2B-13
R/W SHEET NO.	

ROADWAY DESIGN ENGINEER
3/25/2019
NORTH CAROLINA PROFESSIONAL SEAL 046981 ENGINEER FAITH E. JAHANKE
DocuSigned: Faith E. Jahanke
BOUNDARIES CHANGED

DOCUMENT NOT CONSIDERED FINAL UNLESS ALL SIGNATURES COMPLETED

Prepared in the Office of: SUMMIT DESIGN AND ENGINEERING SERVICES
NC FIRM LICENSE No: P-0339
504 Meadowlands Drive
Hillsborough, NC 27278
(919) 732-3883
(919) 732-6676 (FAX)

INTERSECTION -L- WITH -Y6-
SEE PSH 13

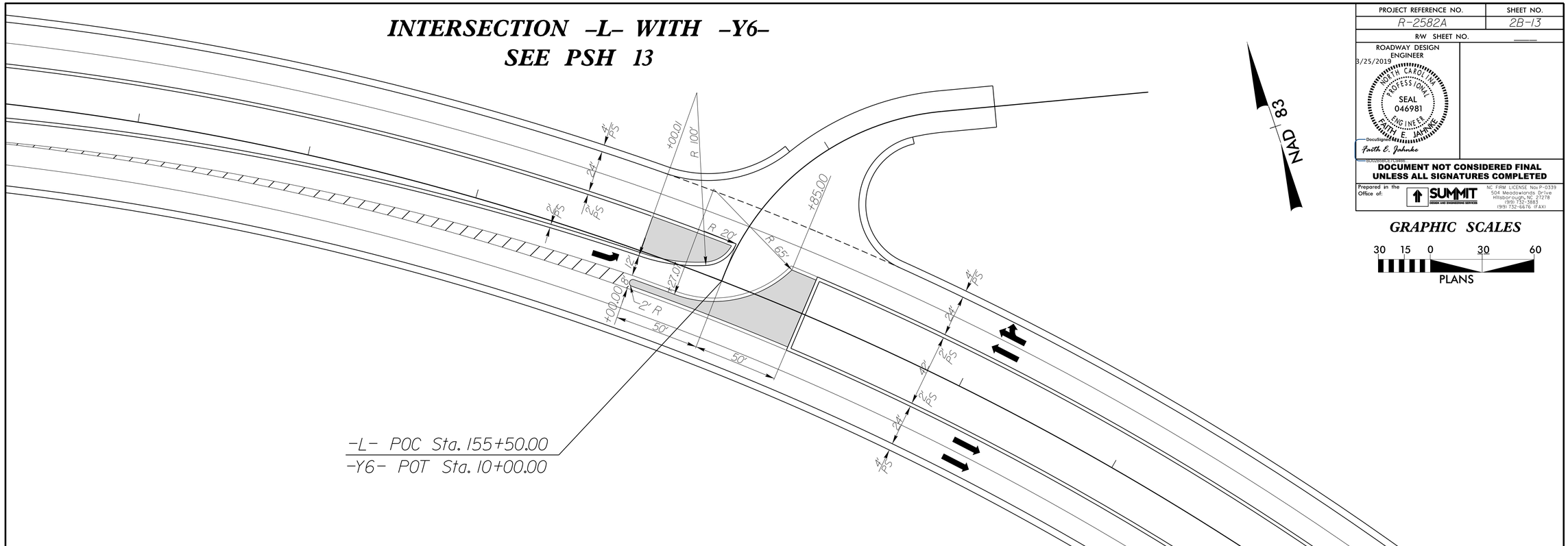

INTERSECTION -L- WITH -Y13A-
SEE PSH 20

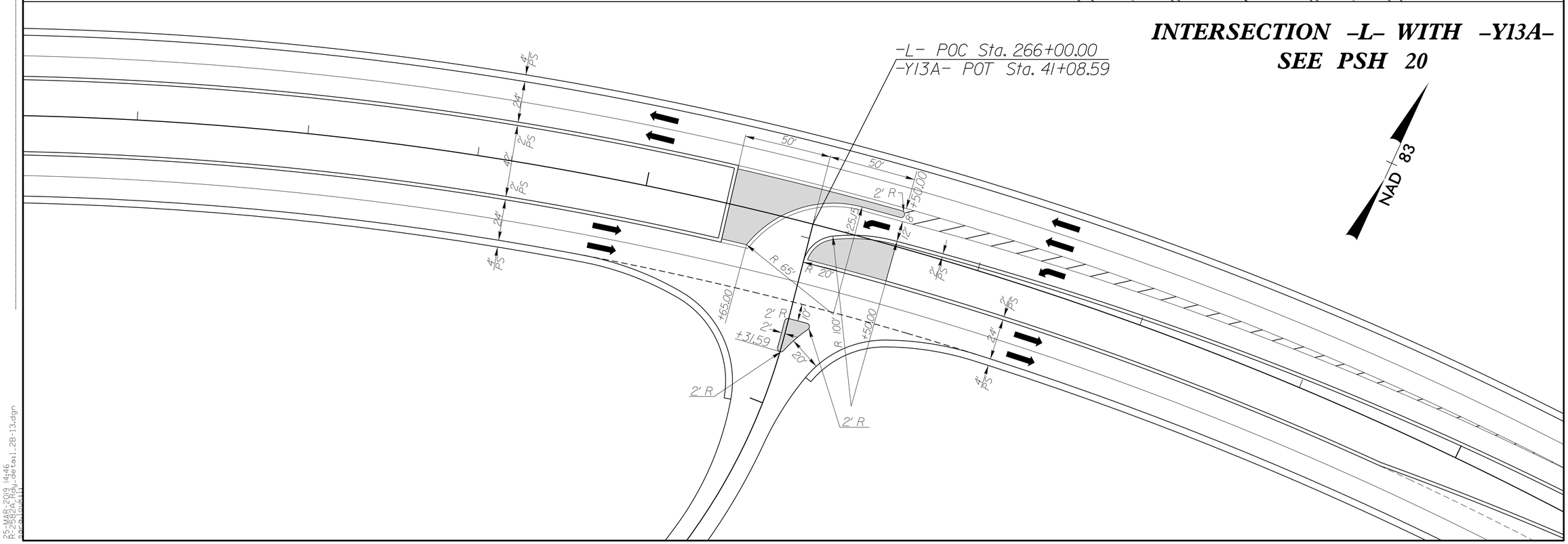

GRAPHIC SCALES

30 15 0 30 60

PLANS

25-MAR-2019 14:46
R2582A_Rdwy_Detail_2B-13.dgn

DocuSign Envelope ID: 82501217-B42B-467C-BD70-B488FE522ABF

8/17/99

PROJECT REFERENCE NO.	SHEET NO.
R-2582A	2B-14
R/W SHEET NO.	

ROADWAY DESIGN ENGINEER
3/25/2019
NORTH CAROLINA PROFESSIONAL SEAL 046981 ENGINEER FAITH E. JAHNKE
DocuSign Envelope ID: 82501217-B42B-467C-BD70-B488FE522ABF
Faith E. Jahnke

DOCUMENT NOT CONSIDERED FINAL UNLESS ALL SIGNATURES COMPLETED

Prepared in the Office of: SUMMIT DESIGN AND ENGINEERING SERVICES
NC FIRM LICENSE No: P-0339
504 Meadowlands Drive
Hillsborough, NC 27278
(919) 732-3883
(919) 732-6676 (FAX)

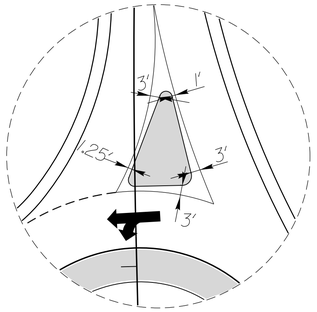

OFFSET TYPICAL A
NOT TO SCALE

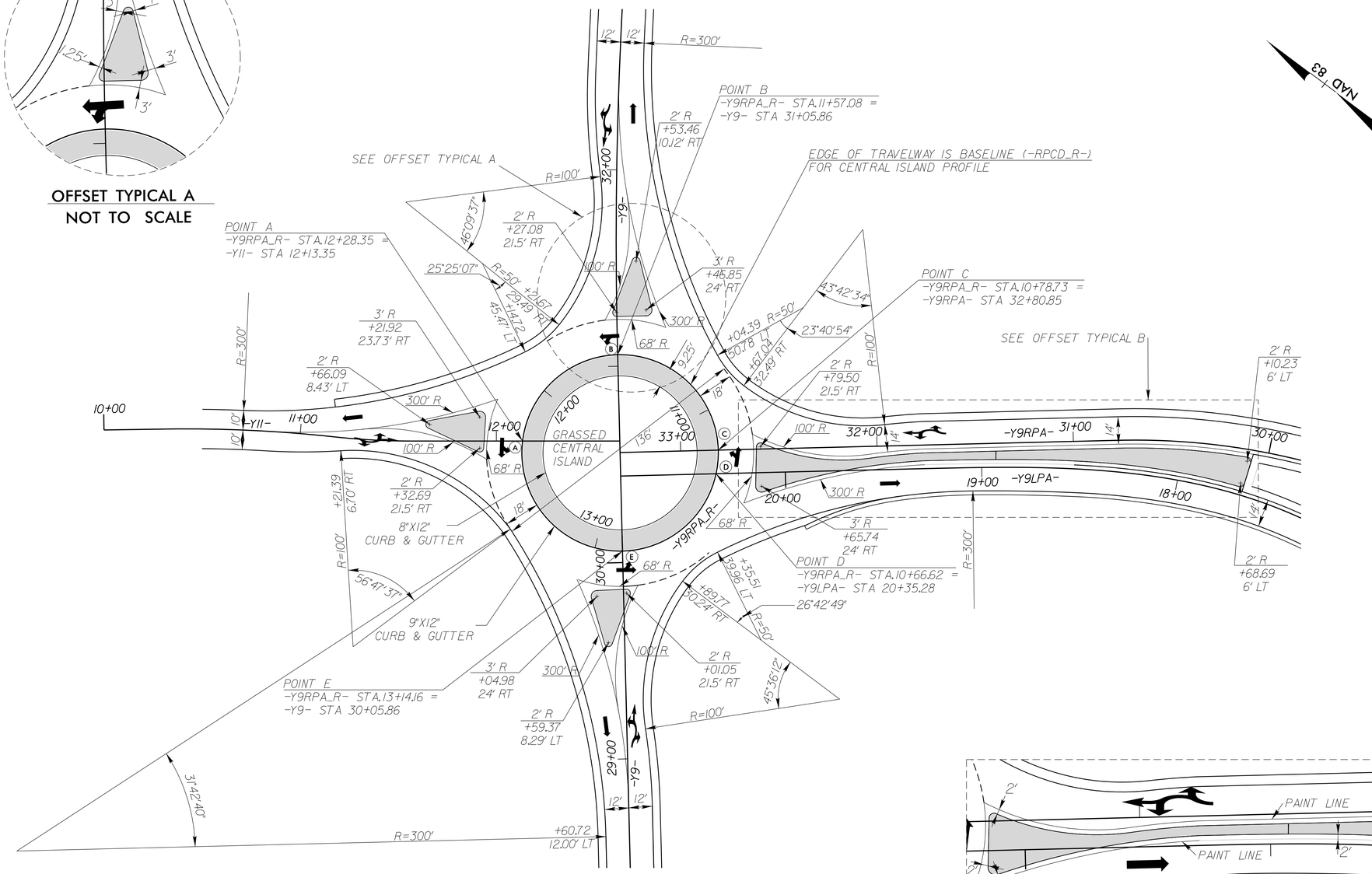

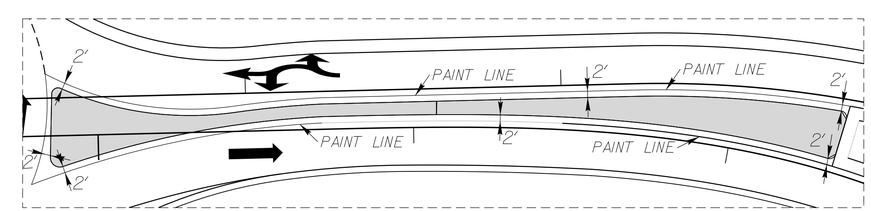

OFFSET TYPICAL B
NOT TO SCALE

GRAPHIC SCALES

30' 15' 0 30' 60'
PLANS

FOR ALIGMENTS SEE SHEET 16

INTERSECTION DETAIL
–Y9–, –Y9RPA–, –Y9LPA–, Y11 AND ROUNDABOUT –Y9RPA_R–

25-MAR-2019 14:46
R:\Roadway\Proj\R2582A_detail2B-14.dgn

DocuSign Envelope ID: 82501217-B42B-467C-BD70-B488FE522ABF

8/17/99

INTERSECTION DETAIL
–Y9–, –Y9RPD–, –Y9LPD–, Y11 AND ROUNDABOUT –Y9RPD_R–

PROJECT REFERENCE NO.	SHEET NO.
R-2582A	2B-15
R/W SHEET NO.	

ROADWAY DESIGN ENGINEER
3/25/2019
NORTH CAROLINA PROFESSIONAL SEAL 046981 ENGINEER FAITH E. JAHANKO
DocuSigned by: Faith E. Jahanko
BOUNDARY SURVEYOR

DOCUMENT NOT CONSIDERED FINAL UNLESS ALL SIGNATURES COMPLETED

Prepared in the Office of: SUMMIT DESIGN AND ENGINEERING SERVICES
NC FIRM LICENSE No: P-0339
504 Meadowlands Drive
Hillsborough, NC 27278
(919) 732-3883
(919) 732-6676 (FAX)

OFFSET TYPICAL A
NOT TO SCALE

OFFSET TYPICAL B
NOT TO SCALE

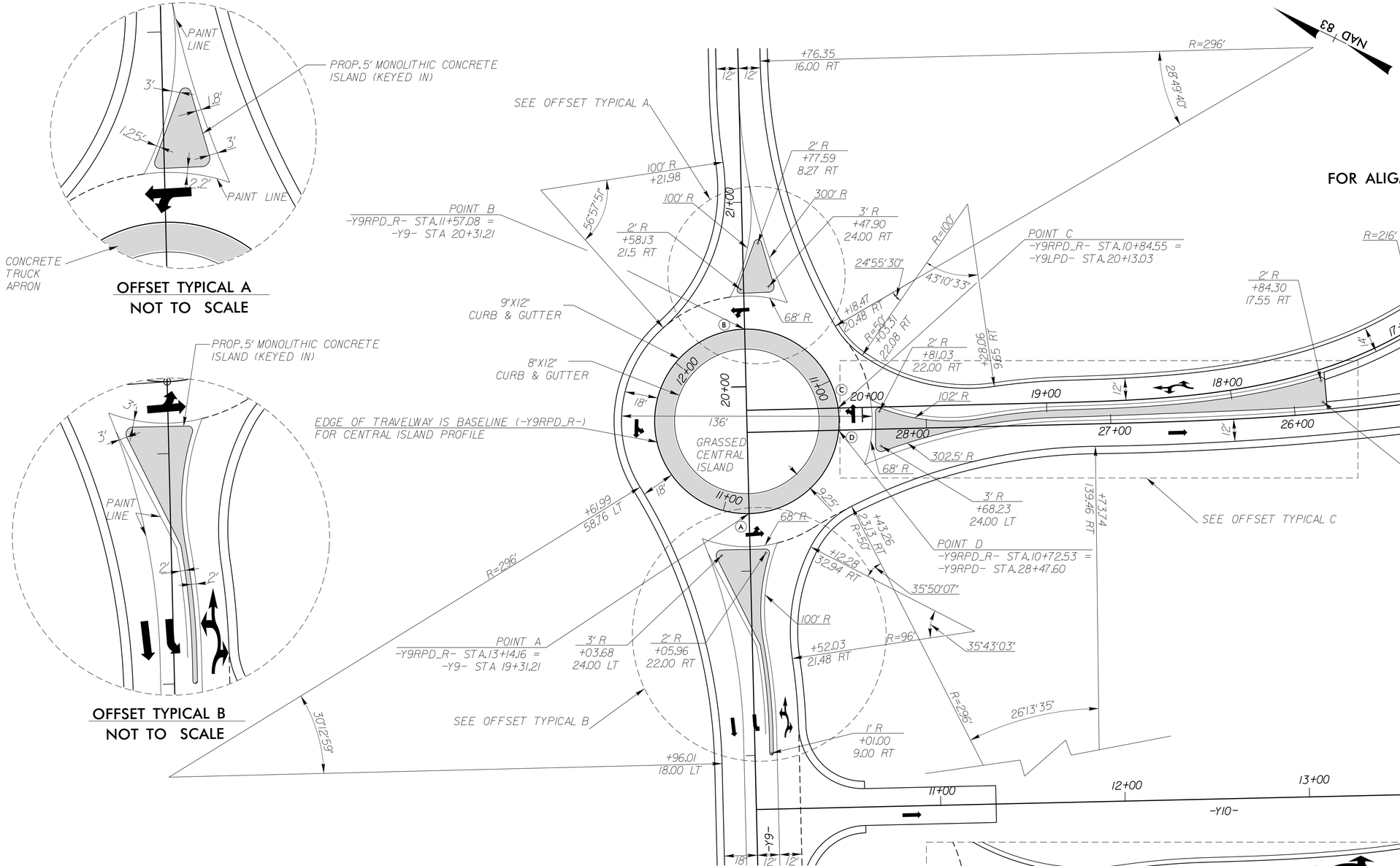

GRAPHIC SCALES

30' 15' 0 30' 60'

PLANS

FOR ALIGMENTS SEE SHEET 16

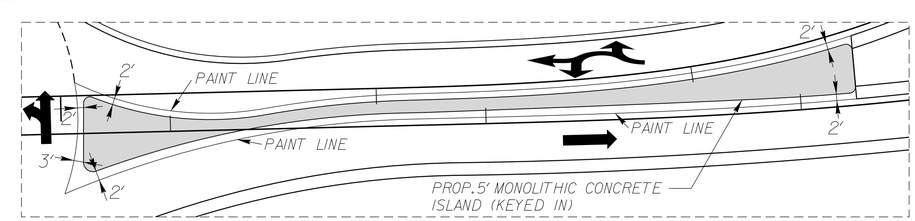

OFFSET TYPICAL C
NOT TO SCALE

25-MAR-2019 14:46
R:\2582A\Roadway\Sheets\2B-15.dgn

DocuSign Envelope ID: 82501217-B42B-467C-BD70-B488FE522ABF

PROJECT REFERENCE NO.	SHEET NO.
R-2582A	2B-16
R/W SHEET NO.	

ROADWAY DESIGN ENGINEER
3/25/2019
NORTH CAROLINA PROFESSIONAL SEAL 046981 ENGINEER FAITH E. JAPINKO
DocuSigned by: Faith E. Japinko

DOCUMENT NOT CONSIDERED FINAL UNLESS ALL SIGNATURES COMPLETED

Prepared in the Office of: SUMMIT DESIGN AND ENGINEERING SERVICES
NC FIRM LICENSE No: P-0339
504 Meadowlands Drive
Hillsborough, NC 27278
(919) 732-3883
(919) 732-6676 (FAX)

INTERSECTION –L– WITH –Y13–
SEE PSH 21

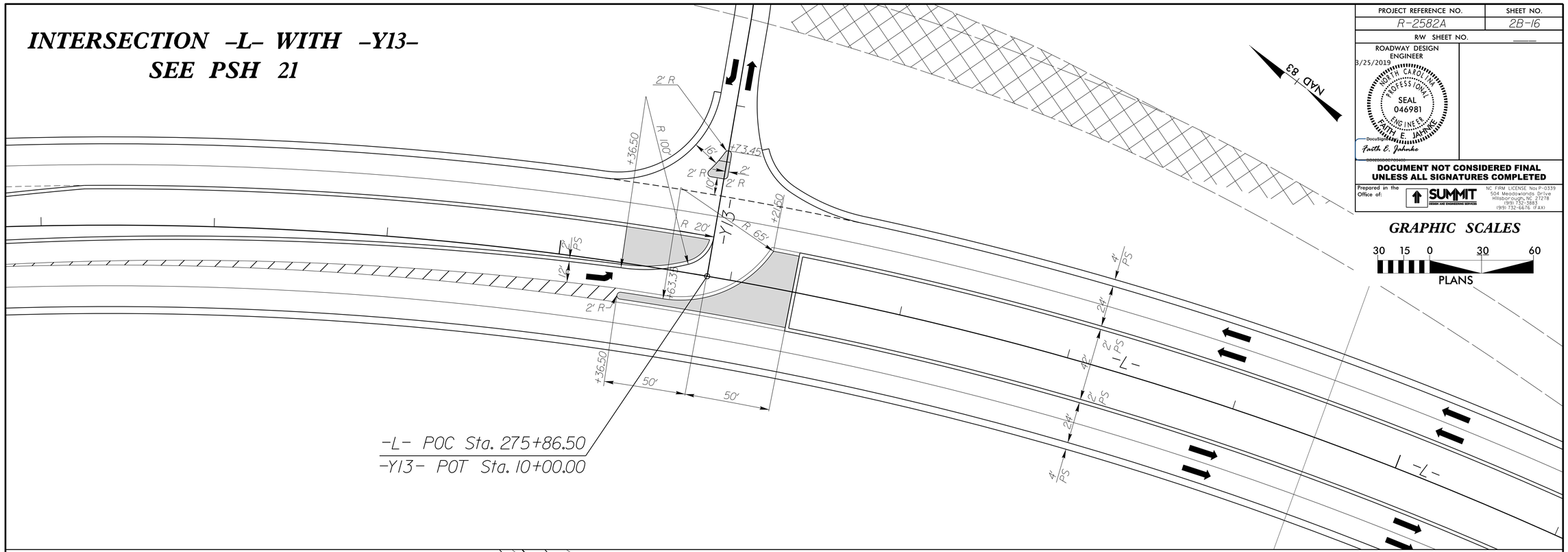

GRAPHIC SCALES

30 15 0 30 60
PLANS

INTERSECTION –L– WITH –Y16–
SEE PSH 25

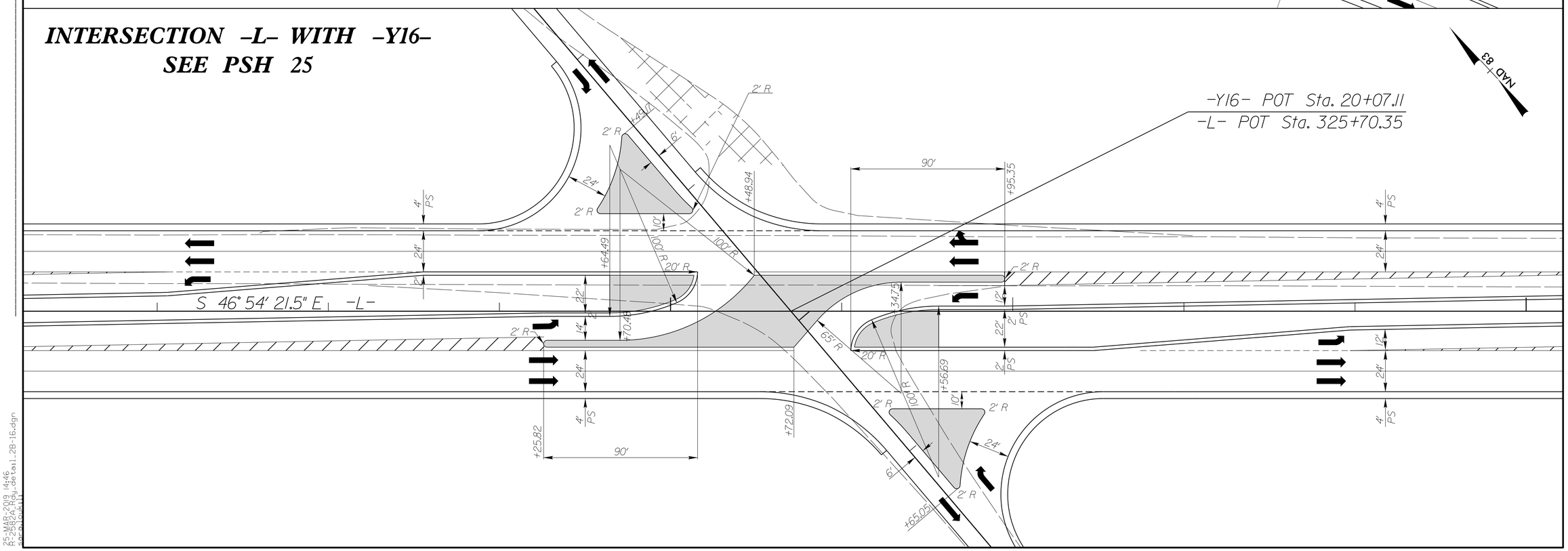

25-MAR-2019 14:46
R2582A_RDy_Detail2B-16.dgn

DocuSign Envelope ID: 82501217-B42B-467C-BD70-B488FE522ABF

INTERSECTION -L- WITH -Y18-
SEE PSH 33

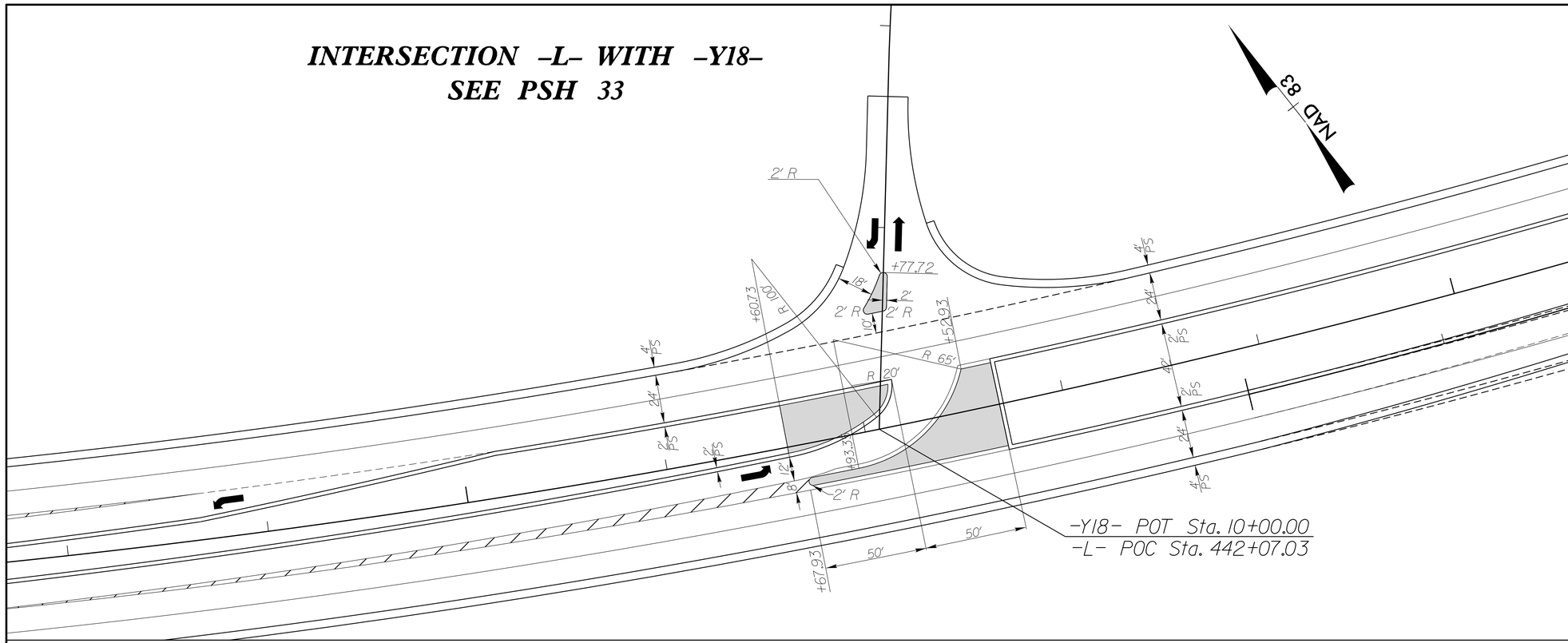

PROJECT REFERENCE NO.	SHEET NO.
R-2582A	2B-17
R/W SHEET NO.	

ROADWAY DESIGN ENGINEER

3/25/2019

NORTH CAROLINA PROFESSIONAL SEAL 046981 ENGINEER FAITH E. JAPINKE

DocuSigned by: Faith E. Japinke

BUSINESS OBJECT ID: [illegible]

DOCUMENT NOT CONSIDERED FINAL UNLESS ALL SIGNATURES COMPLETED

Prepared in the Office of: SUMMIT DESIGN AND ENGINEERING SERVICES

NC FIRM LICENSE No: P-0339
504 Meadowlands Drive
Hillsborough, NC 27278
(919) 732-3883
(919) 732-6676 (FAX)

GRAPHIC SCALES

30 15 0 30 60

PLANS

25-MAR-2019 14:47
R:\2582A_Rdy_Detail2B-17.dgn
japinkef

DocuSign Envelope ID: 82501217-B42B-467C-BD70-B488FE522ABF

DOCUMENT NOT CONSIDERED FINAL UNLESS ALL SIGNATURES COMPLETED	PROJECT REFERENCE NO.	SHEET NO.
	R-2582A	2C-1

5/14/99

STATE OF
NORTH CAROLINA
DEPT. OF TRANSPORTATION
DIVISION OF HIGHWAYS
RALEIGH, N.C.

ENGLISH DETAIL DRAWING FOR
METHOD OF SHOULDER CONSTRUCTION
HIGH SIDE OF SUPERELEVATED CURVE
METHOD II (SHOULDERS 10′ AND ABOVE)

SHEET 2 OF 3

560d02

NORMAL OUTSIDE SHOULDER SLOPES

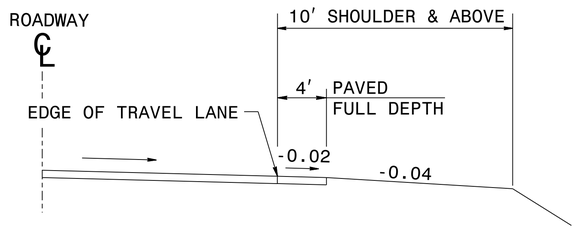

NOTE: ON LOW SIDE OF SUPERELEVATED PAVEMENT USE NORMAL SHOULDER SLOPE UNLESS NORMAL SHOULDER SLOPE IS FLATTER THAN SUPERELEVATION, THEN USE SUPER-ELEVATION RATE ON SHOULDER.

NOTE: "ROLL-OVER" ALGEBRAIC DIFFERENCE IN RATES OF CROSS SLOPE NOT TO EXCEED 0.06 AS SHOWN. IF SUPER-ELEVATION IS REVOLVED ABOUT CENTER LINE OF PAVEMENT, SAME APPLIES. ON DIVIDED ROADWAYS, GRADE POINT TO BE AT THE MEDIAN EDGE OF TRAVEL LANE.

NORMAL MEDIAN SHOULDER SLOPES

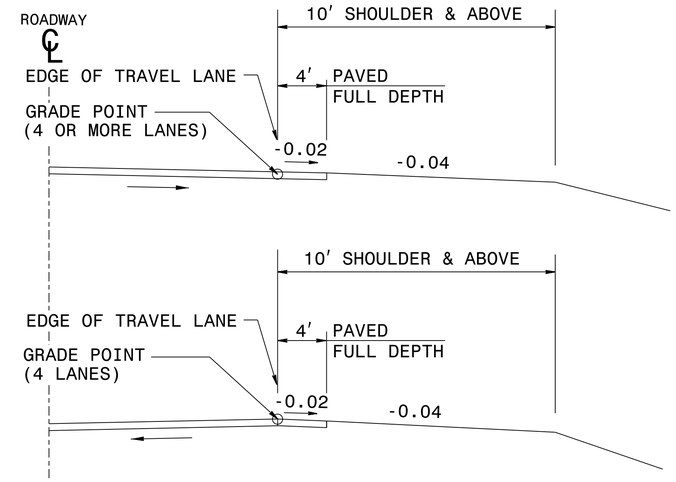

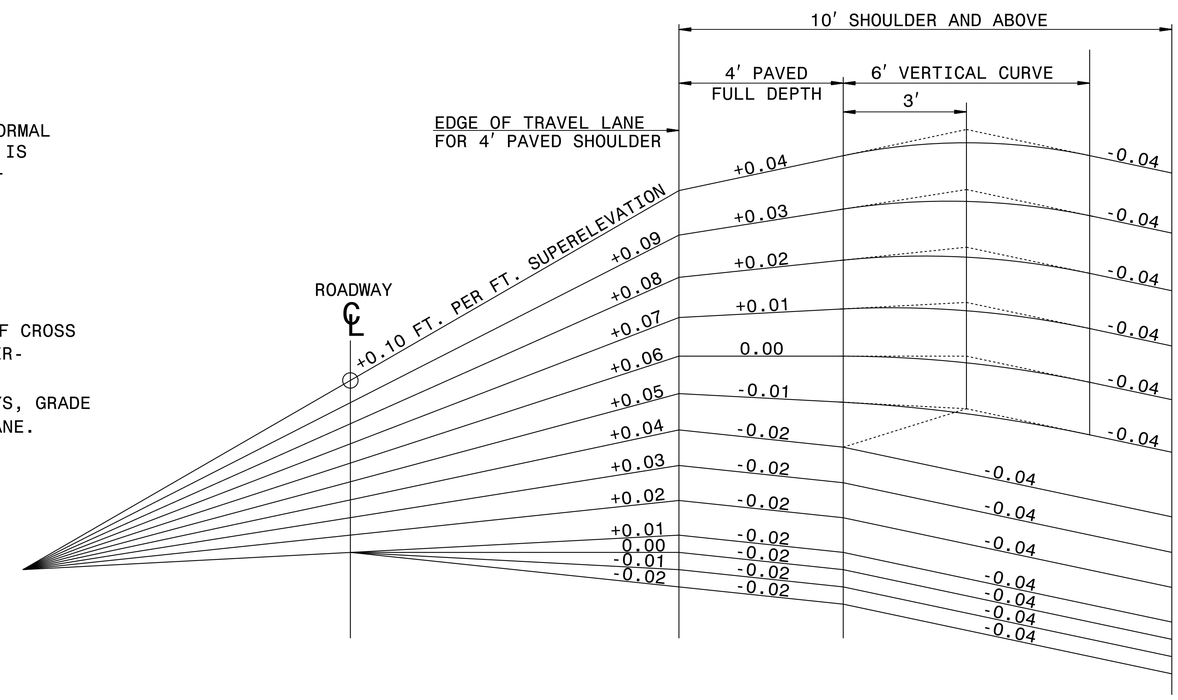

STATE OF
NORTH CAROLINA
DEPT. OF TRANSPORTATION
DIVISION OF HIGHWAYS
RALEIGH, N.C.

ENGLISH DETAIL DRAWING FOR
METHOD OF SHOULDER CONSTRUCTION
HIGH SIDE OF SUPERELEVATED CURVE
METHOD II (SHOULDERS 10′ AND ABOVE)

SHEET 2 OF 3

560d02

3/26/2019

NORTH CAROLINA PROFESSIONAL SEAL 022966 ENGINEER Joel S. Howerton

DocuSigned by: Joel S. Howerton
873F3D17DCDC45F...

CONTRACT STANDARDS AND DEVELOPMENT UNIT
Office 919-707-6950 FAX 919-250-4119

SEE PLATE FOR TITLE

ORIGINAL BY: KKempf DATE: 5-15-09
MODIFIED BY: DATE:
CHECKED BY: DATE:
FILE SPEC: /pricward/stds/stdstodetails/30001/0300d01.dgn

11-JUL-2018 15:11
S:\Contracts\Contracts\Special Details\jhowerton\Standard Drawings\2012 Standard Drawings\Details in Lieu of Standards\Division 5\0560d02 Sheet 2.dgn
jhowerton AT CSD-232595

DocuSign Envelope ID: 82501217-B42B-467C-BD70-B488FE522ABF

PROJECT REFERENCE NO.	SHEET NO.
R-2582A	2C-2

DOCUMENT NOT CONSIDERED FINAL UNLESS ALL SIGNATURES COMPLETED

STATE OF NORTH CAROLINA
DEPT. OF TRANSPORTATION
DIVISION OF HIGHWAYS
RALEIGH, N.C.

ROADWAY DETAIL DRAWING FOR
GUARDRAIL INSTALLATION

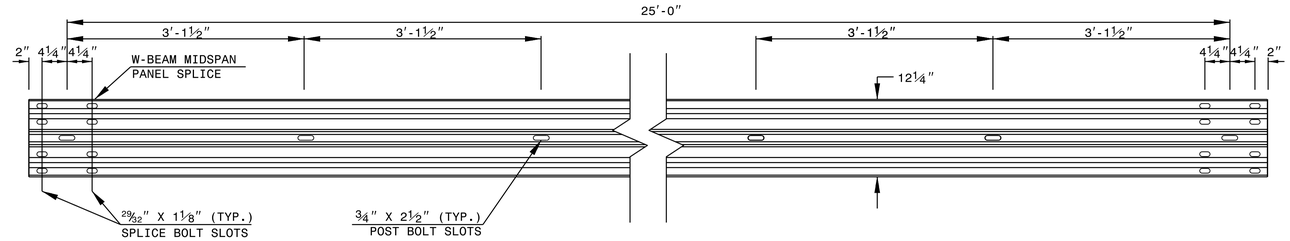

STANDARD W-BEAM GUARDRAIL

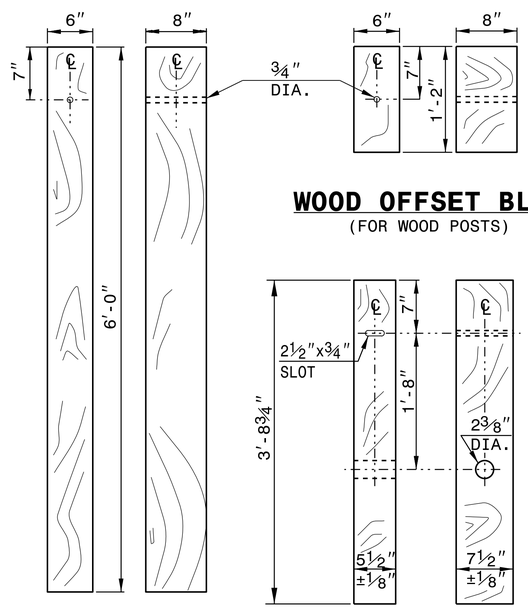

STANDARD LINE POST

WOOD OFFSET BLOCK
(FOR WOOD POSTS)

SHORT WOOD BREAKAWAY POST

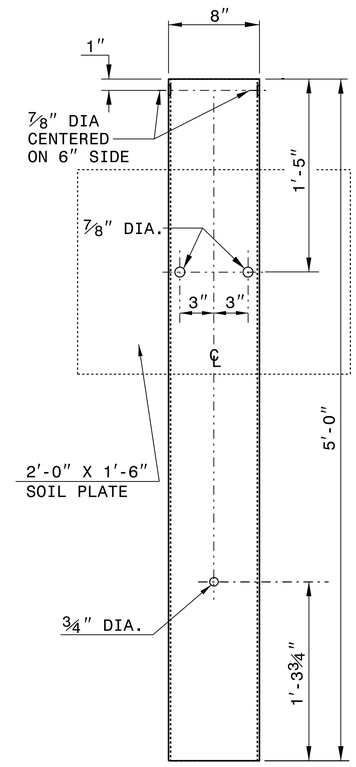

STEEL TUBE
TS 6"x8"x0.1875"

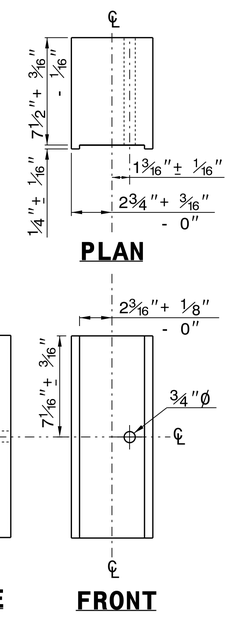

ROUTED OFFSET BLOCK

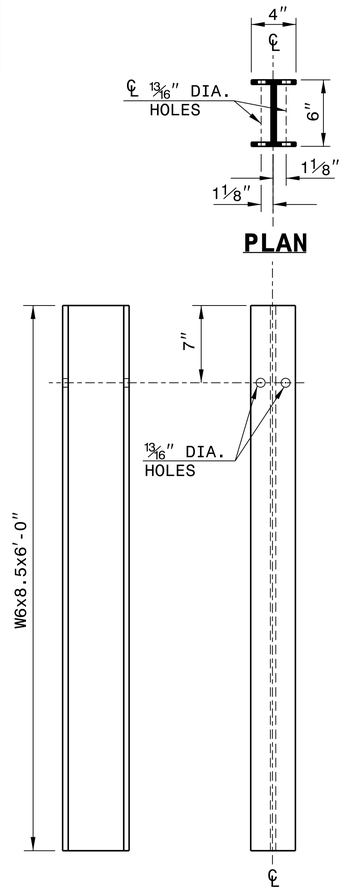

"W6" STEEL POST

SYSTEM PARTS

SHEET 6 OF 8
862D02

STATE OF NORTH CAROLINA
DEPT. OF TRANSPORTATION
DIVISION OF HIGHWAYS
RALEIGH, N.C.

ROADWAY DETAIL DRAWING FOR
GUARDRAIL INSTALLATION

SHEET 6 OF 8
862D02

3/26/2019

NORTH CAROLINA PROFESSIONAL SEAL 022966 ENGINEER JOEL S. HOWERTON

DocuSigned by: Joel S. Howerton
873F3D17DCDC45F...

CONTRACTS STANDARDS AND DEVELOPMENT UNIT
Office 919-707-6950 FAX 919-250-4119

SEE TITLE BLOCK

ORIGINAL BY: J.HOWERTON DATE: 3-7-2018
MODIFIED BY: DATE:
CHECKED BY: DATE:
FILE SPEC.:

DocuSign Envelope ID: 82501217-B42B-467C-BD70-B488FE522ABF

PROJECT REFERENCE NO.	SHEET NO.
R-2582A	2C-3

DOCUMENT NOT CONSIDERED FINAL UNLESS ALL SIGNATURES COMPLETED

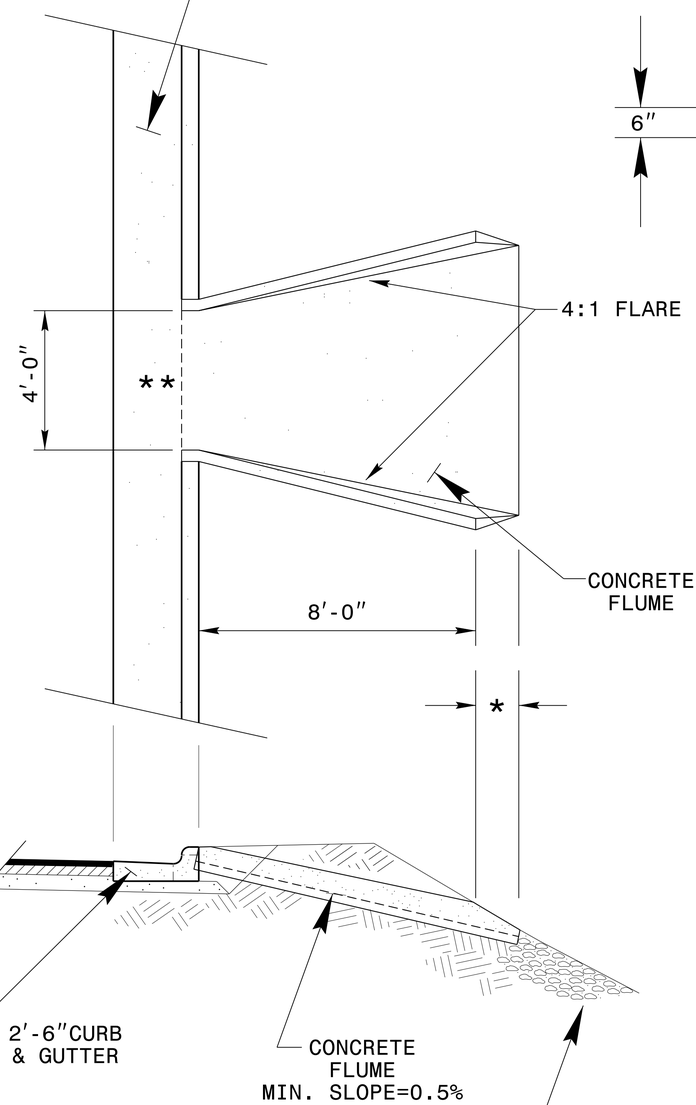

ELEVATION

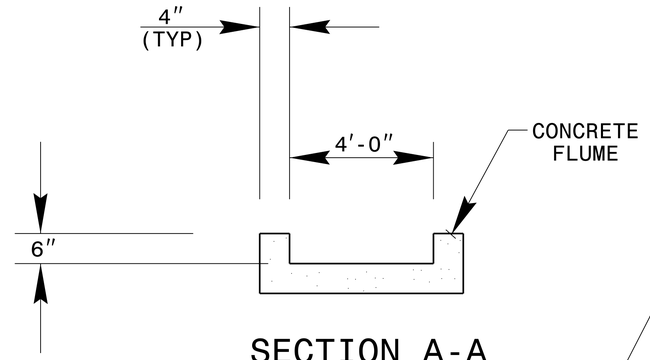

SECTION A-A

FLUME SIDES SHOULD BE FLUSH WITH ADJACENT GROUND LINE TO A MAX. HEIGHT OF 12"

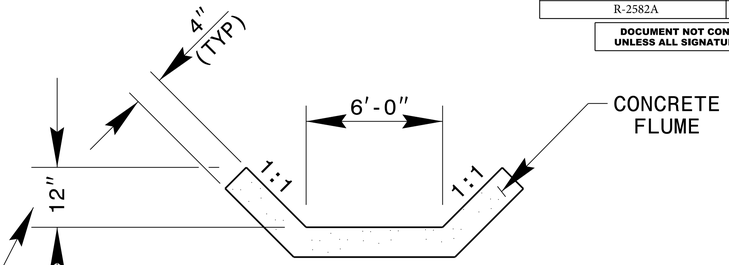

SECTION B-B

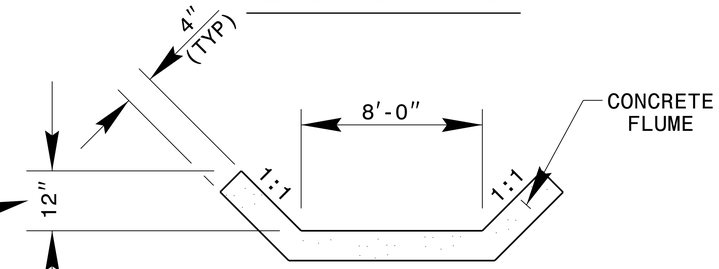

SECTION C-C

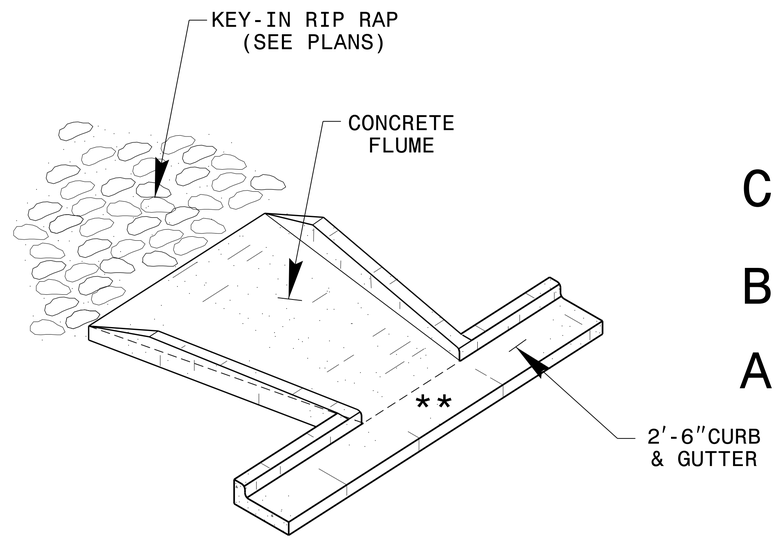

PERSPECTIVE

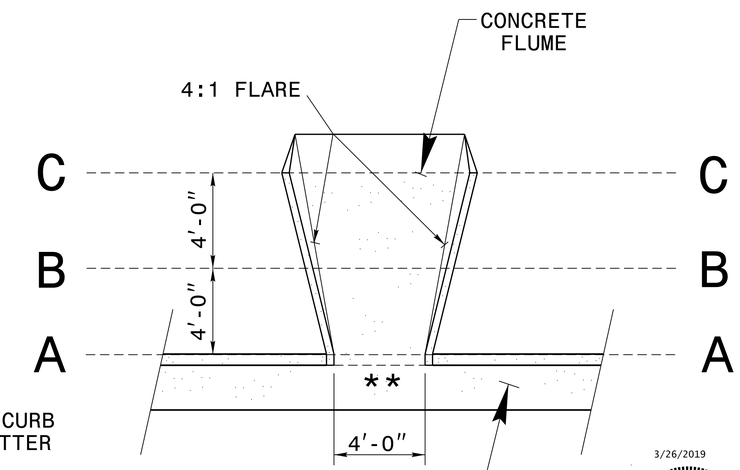

PLAN

3/26/2019

NORTH CAROLINA PROFESSIONAL SEAL 022966 ENGINEER Joel S. Howerton

DocuSigned by: Joel S. Howerton
873F3D17DCDC45F...

* LENGTH VARIABLE WITH DITCH SLOPE

** DEPRESS THE GUTTER IN THIS AREA TO PREVENT BYPASS

NOTES:

- CONSTRUCT CONCRETE FLUME IN ACCORDANCE WITH THIS DETAIL.
- RIP RAP LINED DITCH WILL BE THE TYPE AND LENGTH SPECIFIED BY THE ROADWAY PLANS. PLACE RIP-RAP AT THE END OF THE DITCH AS INDICATED BY STD. DWG. 876.02 FOR AN 18" PIPE.
- MODIFICATIONS MAY BE MADE AS DIRECTED BY THE ENGINEER.

CONTRACT STANDARDS & DEVELOPMENT UNIT
STANDARDS AND SPECIAL DESIGN
Office 919-707-6950 FAX 919-250-4119

CONCRETE FLUME IN 2'-6" C&G

ORIGINAL BY: DATE:
MODIFIED BY: nbritt DATE: 05-11-04
CHECKED BY: DATE:
FILE SPEC.: details\nbritt\metric\r2201modifiedflume.dgn

6/10/99
19-JUN-2018 10:22
S:\Contracts\Contracts\Special Details\nbritt\english\rural\r-2201special modified flume.dgn
jhowerton AT CSP-214595

DocuSign Envelope ID: 82501217-B42B-467C-BD70-B488FE522ABF

PROJECT REFERENCE NO.	SHEET NO.
R-2582A	2C-4

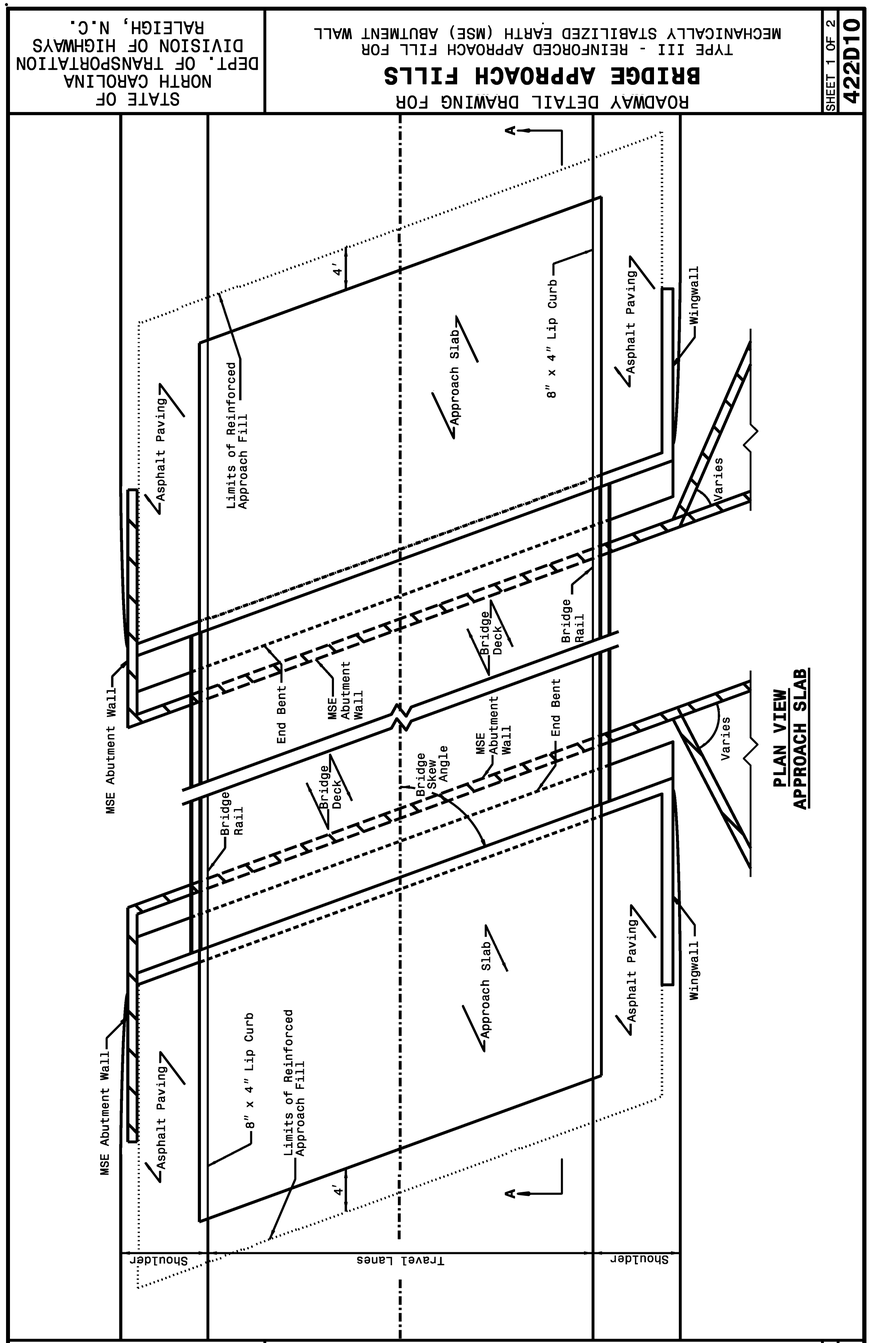

STATE OF NORTH CAROLINA DEPT. OF TRANSPORTATION DIVISION OF HIGHWAYS RALEIGH, N.C.

ROADWAY DETAIL DRAWING FOR **BRIDGE APPROACH FILLS** TYPE III - REINFORCED APPROACH FILL FOR MECHANICALLY STABILIZED EARTH (MSE) ABUTMENT WALL

SHEET 1 OF 2 — 422D10

STATE OF NORTH CAROLINA DEPT. OF TRANSPORTATION DIVISION OF HIGHWAYS RALEIGH, N.C.

ROADWAY DETAIL DRAWING FOR **BRIDGE APPROACH FILLS** TYPE III - REINFORCED APPROACH FILL FOR MECHANICALLY STABILIZED EARTH (MSE) ABUTMENT WALL

SHEET 1 OF 2 — 422D10

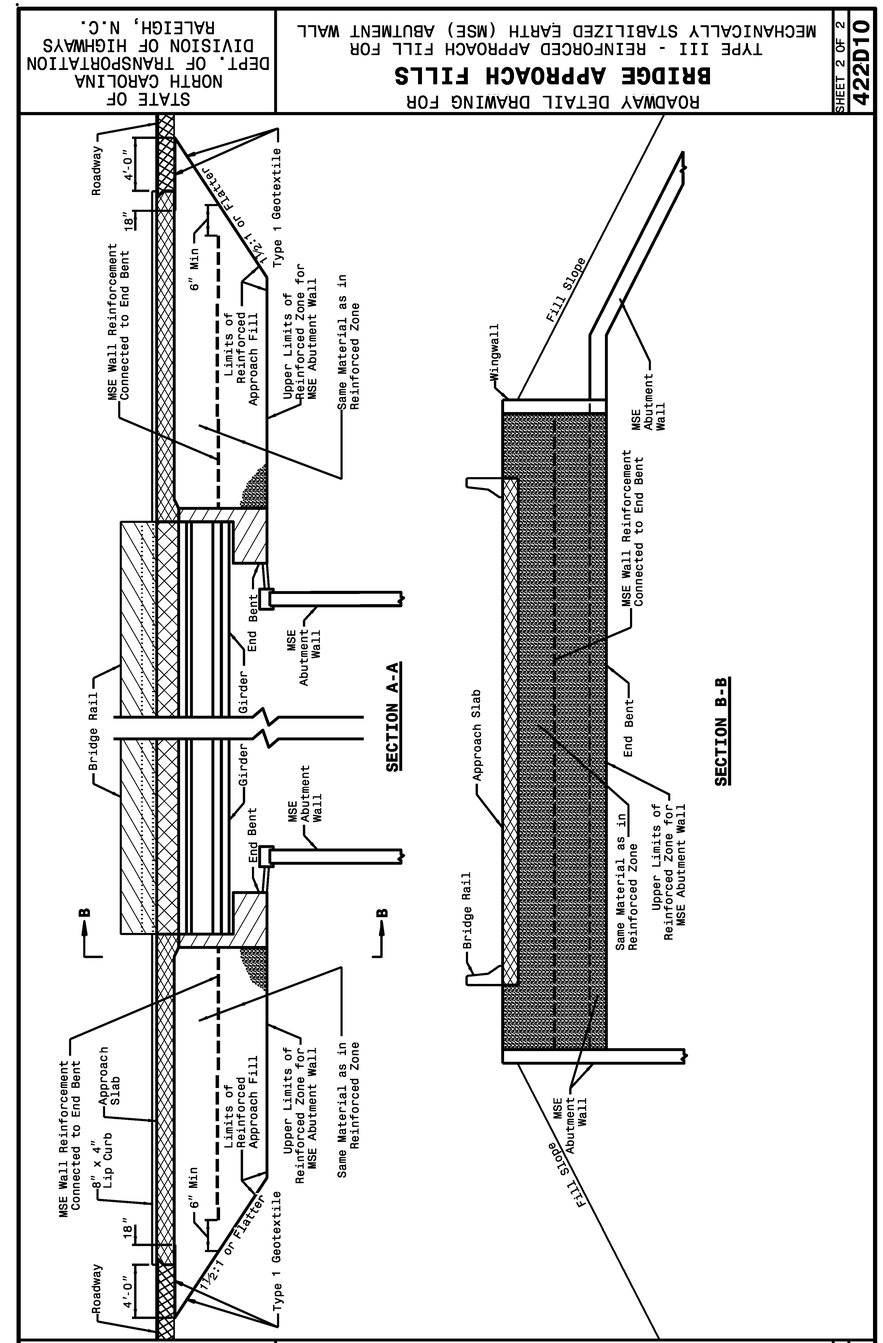

STATE OF NORTH CAROLINA DEPT. OF TRANSPORTATION DIVISION OF HIGHWAYS RALEIGH, N.C.

ROADWAY DETAIL DRAWING FOR **BRIDGE APPROACH FILLS** TYPE III - REINFORCED APPROACH FILL FOR MECHANICALLY STABILIZED EARTH (MSE) ABUTMENT WALL

SHEET 2 OF 2 — 422D10

3/26/2019

NORTH CAROLINA PROFESSIONAL SEAL 022966 ENGINEER JOEL S. HOWERTON

DocuSigned by: Joel S. Howerton 873F3D17DCDC45F...

DOCUMENT NOT CONSIDERED FINAL UNLESS ALL SIGNATURES COMPLETED

CONTRACTS STANDARDS AND DEVELOPMENT UNIT
Office 919-707-6950 FAX 919-250-4119

TYPE III REINFORCED APPROACH FILLS

ORIGINAL BY: K. A. KEMPF DATE: JULY 2017
MODIFIED BY: DATE:
CHECKED BY: DATE:
FILE SPEC.: 2018 standard drawings\division 422d10.dgn

DocuSign Envelope ID: 40D06436-BED0-40CF-9287-2248AB649027

PROJECT REFERENCE NO.	SHEET NO.
R-2582A	2C-5

COAL COMBUSTION PRODUCT PLACEMENT

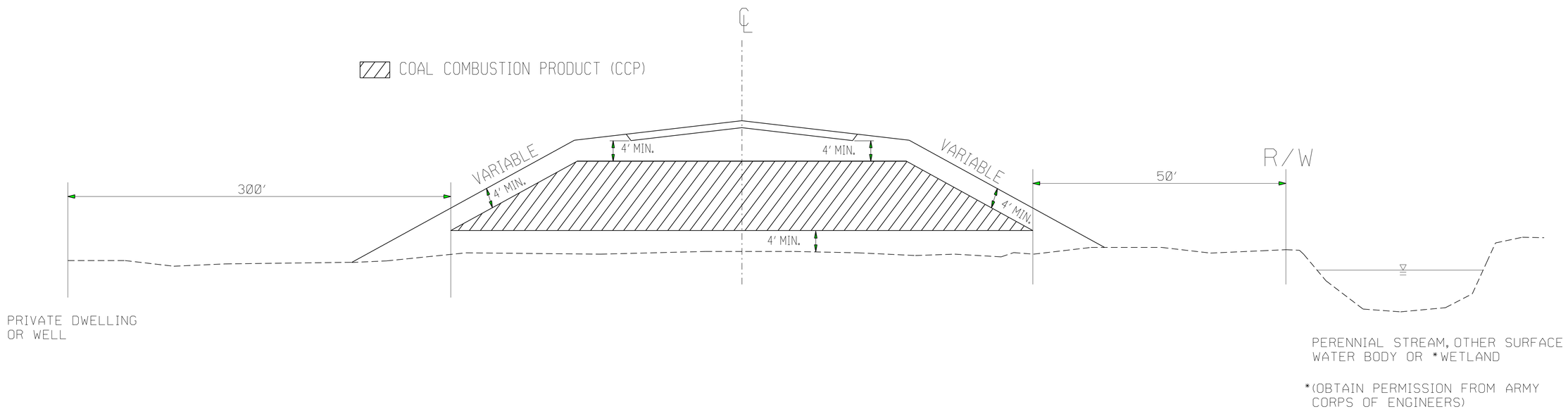

PLACE CCP IN HATCHED AREA IN ACCORDANCE WITH THE PROJECT SPECIAL PROVISIONS

PLACE CCP A MINIMUM OF 5' ABOVE SEASONAL HIGH GROUND WATER

PLACE AT LOCATIONS AS APPROVED BY THE ENGINEER

PLACE SOIL BORROW MATERIAL ON THE OUTSIDE OF CCP AS EACH LIFT OF CCP IS PLACED

4/3/2019

NORTH CAROLINA PROFESSIONAL SEAL 022966 ENGINEER Joel S. Howerton

DocuSigned by: Joel S. Howerton 873F3D17DCDC45F...

DOCUMENT NOT CONSIDERED FINAL UNLESS ALL SIGNATURES COMPLETED

CONTRACT STANDARDS AND DEVELOPMENT UNIT
Office 919-707-6950 FAX 919-250-4119

COAL COMBUSTION PRODUCT PLACEMENT DETAIL

ORIGINAL BY: J.S.H. DATE: 3/16/15
MODIFIED BY: DATE:
CHECKED BY: DATE:
FILE SPEC.: joel/coal combustion material detail.dgn

07-SEP-2017 08:21
S:\Contracts\Contracts\Special Details\jhowerton\Coal Combustion Product Detail.dgn
jhowerton AT CSD-292595

NOTES:

- Rails, cover boards, and posts are to be fastened together using stainless steel wood screws, not nails.
- All backfill for the footings is to be firmly tamped in place
- Only finished lumber will be used for the fence components (no rough sawn material will be used)
- All fence dimensions (height & opening sizes) shall conform to NCDOT standards for control access fence.

PLAN VIEW

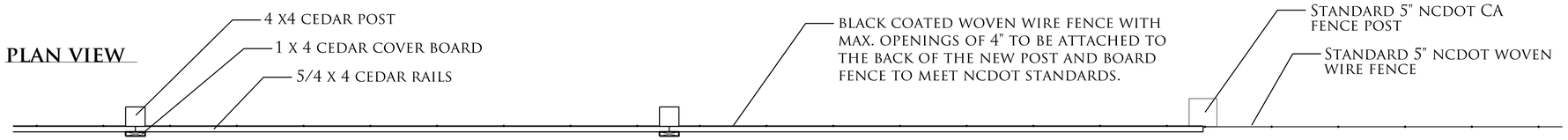

SECTION ELEVATION VIEW 1

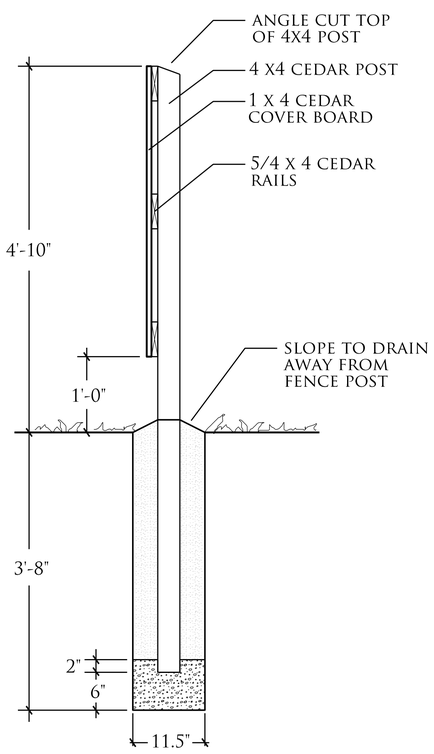

SECTION ELEVATION VIEW 2

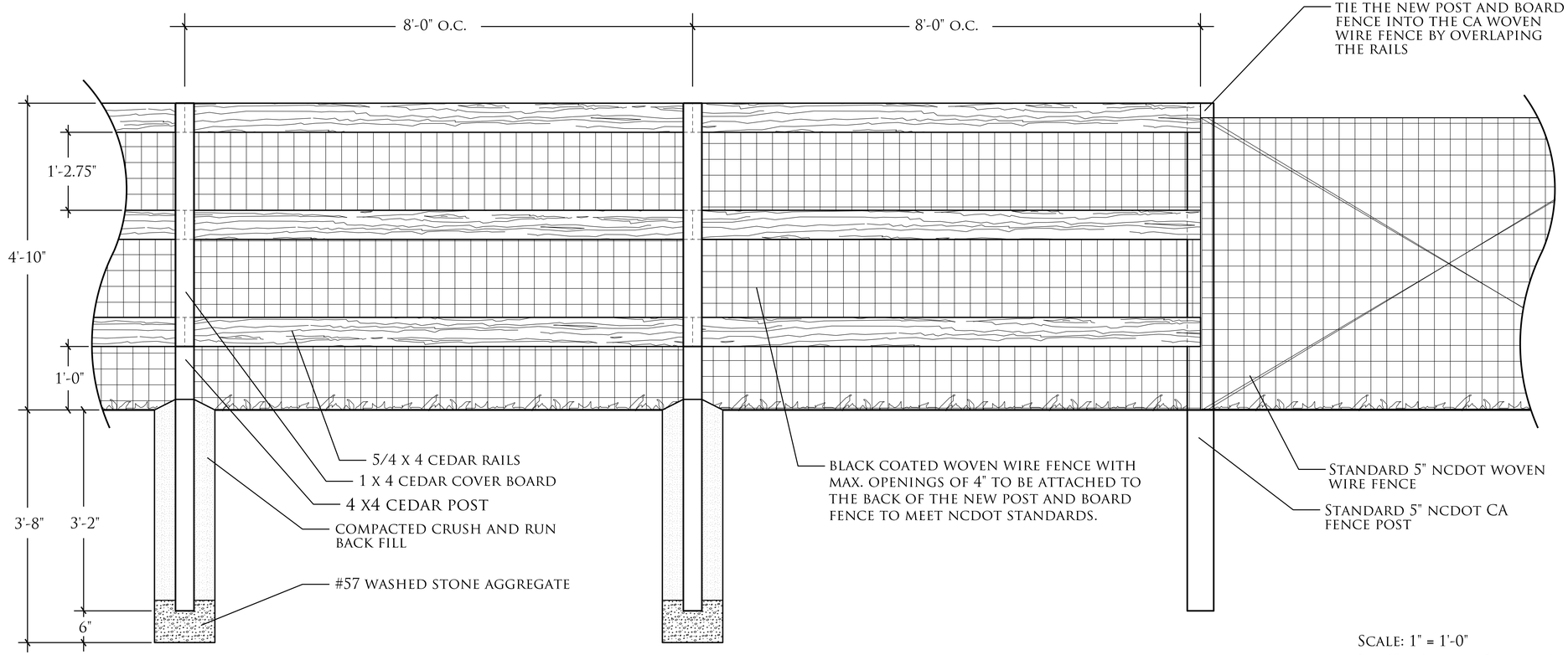

SCALE: 1" = 1'-0"

1 6" 0 1 2

NCDOT - ROADSIDE ENVIRONMENTAL UNIT
LANDSCAPE DESIGN & DEVELOPMENT
1557 MAIL SERVICE CENTER RALEIGH NC 27699-1557
PH: 919-707-2935 FAX: 919-715-2554
HTTP://WWW.NCDOT.ORG/DOH/OPERATIONS/DP CHIEF ENG/ROADSIDE/

NORTHAMPTON CO. HIST. MITIGATION
NORTHAMPTON COUNTY
TIP #: R-2582A

NORTH CAROLINA REGISTERED LANDSCAPE ARCHITECT 2066 STEVEN K. COOPER
Digitally signed by
DocuSigned by:
4/9/2019

SHEET DESCRIPTION:			
PREL. DESIGN DATE :	Dec. 17, 2018	FENCE DETAIL	T.I.P. # R-2582A
CHECKED BY & DATE :	- - - - -	LANDSCAPE PLAN SHEET	WBS # 34472.1.2
FINAL DESIGN DATE :	April, 1 2019		FED I.D. # HP-NHF-158(29)
			SHEET NO : 2C–6 / TOTAL SHEET NO :

STATE OF NORTH CAROLINA DEPARTMENT OF TRANSPORTATION

PROJECT REFERENCE NO.	SHEET NO.
R-2582A	2G-1

GEOTECHNICAL ENGINEER

NORTH CAROLINA PROFESSIONAL SEAL 032171 ENGINEER JINYOUNG PARK

DocuSigned by: 1/15/2019

SIGNATURE DATE

ENGINEER

SIGNATURE DATE

DOCUMENT NOT CONSIDERED FINAL UNLESS ALL SIGNATURES COMPLETED

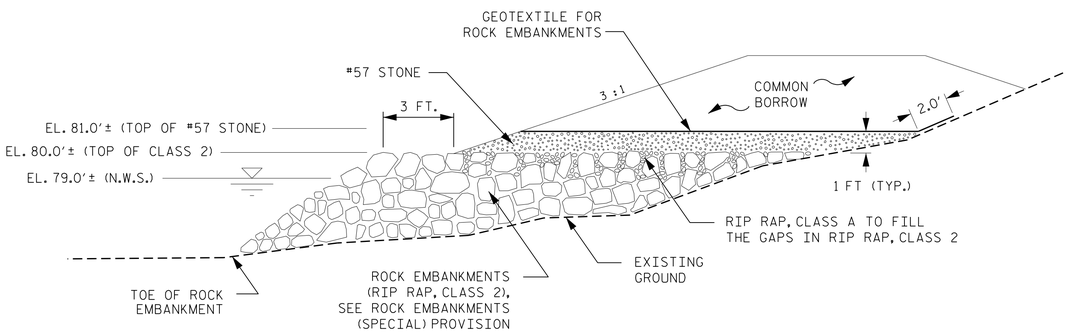

ROCK EMBANKMENT TYPICAL SECTION

NOT TO SCALE

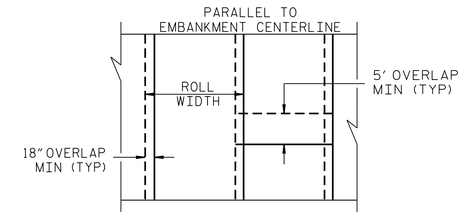

GEOTEXTILE OVERLAP DETAIL

(PLAN VIEW)

NOTES

FOR ROCK EMBANKMENTS, SEE ROCK EMBANKMENTS (SPECIAL) PROVISIONS.

INSTALL ROCK EMBANKMENTS USING CLASS 2 RIP RAP AS SHOWN IN THE PLAN OR 1.0 FT ABOVE THE NORMAL WATER SURFACE.

FILL VOIDS IN THE TOP OF ROCK EMBANKMENTS WITH RIP RAP, CLASS A.

PLACE #57 STONE (SELECT MATERIAL, CLASS VI) 1 FT. (TYP.) ABOVE RIP RAP, CLASS 2 AS SHOWN IN THE PLAN.

INSTALL GEOTEXTILE FOR ROCK EMBANKMENT ON TOP OF #57 STONE.

CONSTRUCT EMBANKMENT ABOVE ROCK EMBANKMENTS FROM ELEVATION SHOWN IN THE PLAN.

ESTIMATED QUANTITIES	
RIP RAP, CLASS 2	1,450 TONS
RIP RAP, CLASS A	470 TONS
#57 STONE (SELECT MATERIAL, CLASS VI)	500 TONS
GEOTEXTILE FOR ROCK EMBANKMENTS	1,050 SY

PREPARED BY: J. PARK	DATE: 01 / 2019
REVIEWED BY: J. BATTS	DATE: 01 / 2019

STATE OF NORTH CAROLINA DEPARTMENT OF TRANSPORTATION

NORTH CAROLINA DEPARTMENT OF TRANSPORTATION DIVISION OF HIGHWAYS

GEOTECHNICAL ENGINEERING UNIT

ROCK EMBANKMENTS DETAILS & NOTES

REVISIONS

NO.	BY	DATE	NO.	BY	DATE
1	–	–	3		
2			4		

PROJECT REFERENCE NO.	SHEET NO.
R-2582A	2G-2

GEOTECHNICAL ENGINEER

NORTH CAROLINA PROFESSIONAL SEAL 031022 ENGINEER ANDREW A. NASH

DocuSigned by: Andrew A. Nash 3/21/2019
671DA6858B0B4FF... SIGNATURE DATE

ENGINEER

SIGNATURE DATE

DOCUMENT NOT CONSIDERED FINAL UNLESS ALL SIGNATURES COMPLETED

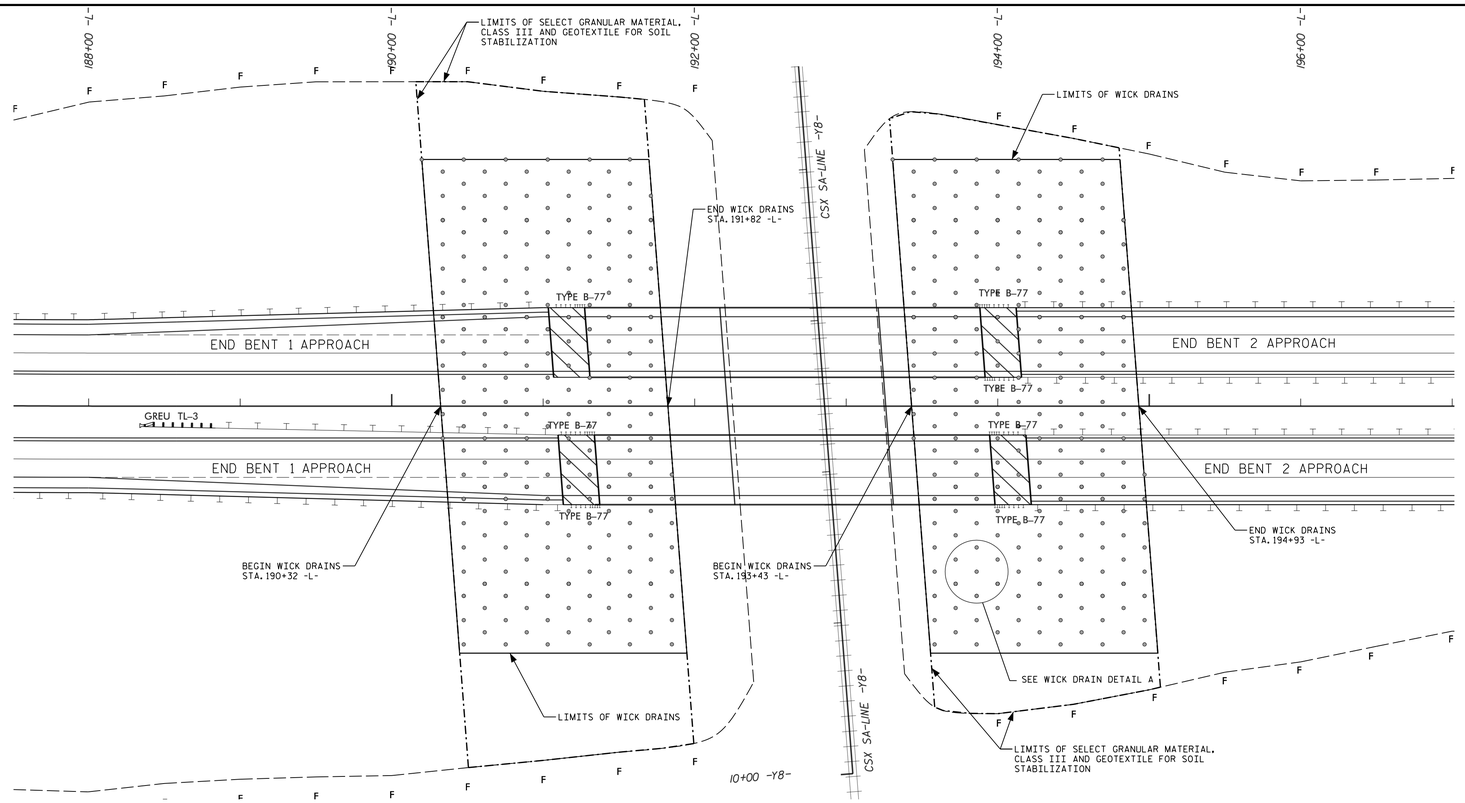

GROUND IMPROVEMENT PLAN VIEW

NOT TO SCALE

WICK DRAIN CONFIGURATION				
STATIONS (-L- LINE)		WICK DRAIN SPACING, S	WICK DRAIN TIP ELEVATION	ESTIMATED WAITING PERIOD
FROM	TO			
190 + 32	191 + 82	6 FT.	65.0 FT	5 MONTHS✳
193 + 43	194 + 93	6 FT.	65.0 FT	5 MONTHS

✳ SEE STAGED EMBANKMENT CONSTRUCTION TABLE BELOW

STAGED EMBANKMENT CONSTRUCTION FOR APPROACH TO END BENT 1		
STAGE	EMBANKMENT HEIGHT	ESTIMATED WAITING PERIOD✳✳
1	35 FT.	2 MONTHS
2	GREATER THAN 35 FT.	3 MONTHS

✳✳ WAITING PERIOD AT EACH STAGE

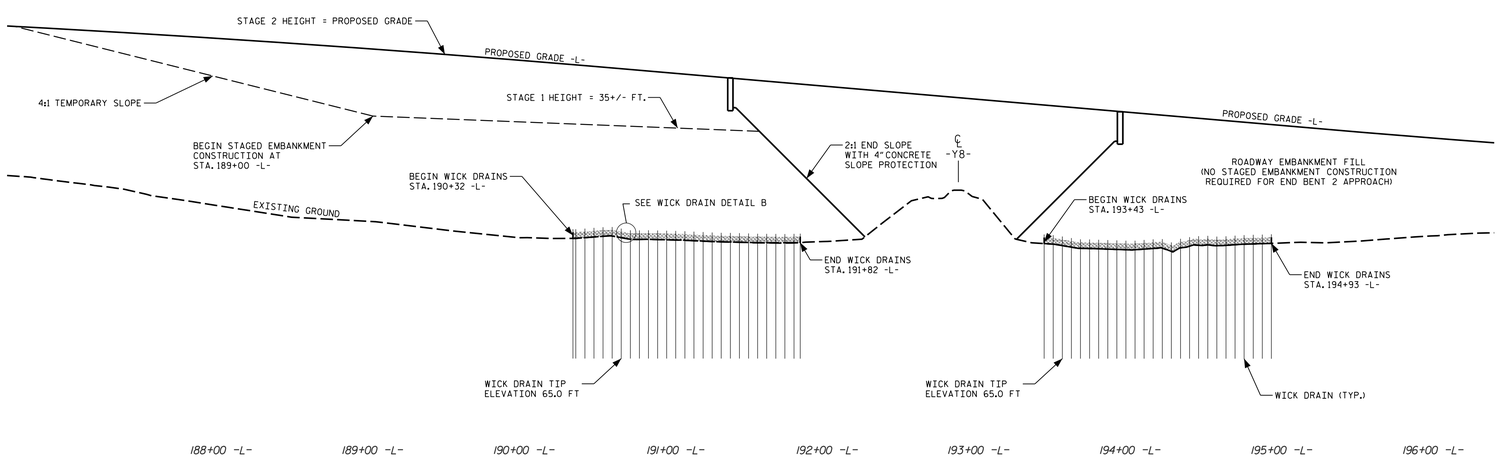

PROFILE ALONG -L-

NOT TO SCALE

ESTIMATED QUANTITIES	
PAY ITEM	ESTIMATED QUANTITY
WICK DRAINS	135,000 FT.
SELECT GRANULAR MATERIAL, CLASS III	10,700 CU. YD.
GEOTEXTILE FOR SOIL STABILIZATION	14,000 SQ. YD.

PREPARED BY: ALEXANDER, M. J.	DATE: 3/20/19
REVIEWED BY: NASH, A. A.	DATE: 3/20/19

Prepared in the Office of:

Terracon
Consulting Engineers and Scientists
2401 BRENTWOOD ROAD, SUITE 107
RALEIGH, NORTH CAROLINA 27604
NC REGISTERED ENGINEERING FIRM: F-0869
NC REGISTERED GEOLOGIC FIRM: C-367

STATE OF NORTH CAROLINA DEPARTMENT OF TRANSPORTATION

NORTH CAROLINA DEPARTMENT OF TRANSPORTATION DIVISION OF HIGHWAYS

GEOTECHNICAL ENGINEERING UNIT

GROUND IMPROVEMENT PLAN AND PROFILE

REVISIONS

NO.	BY	DATE	NO.	BY	DATE
1			3		
2			4		

PROJECT REFERENCE NO.	SHEET NO.
R-2582A	2G-3

GEOTECHNICAL ENGINEER

NORTH CAROLINA PROFESSIONAL SEAL 031022 ENGINEER ANDREW A. NASH

DocuSigned by: Andrew A. Nash 3/21/2019
671DA6858A0B4FF... SIGNATURE DATE

ENGINEER

SIGNATURE DATE

DOCUMENT NOT CONSIDERED FINAL UNLESS ALL SIGNATURES COMPLETED

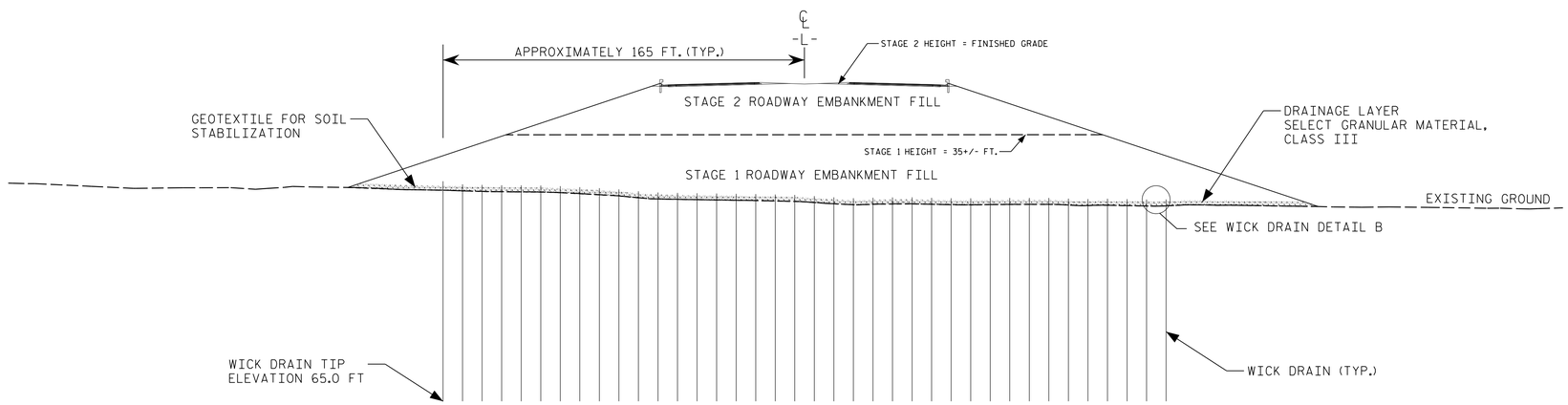

GROUND IMPROVEMENT END BENT 1 APPROACH CROSS SECTION

NOT TO SCALE

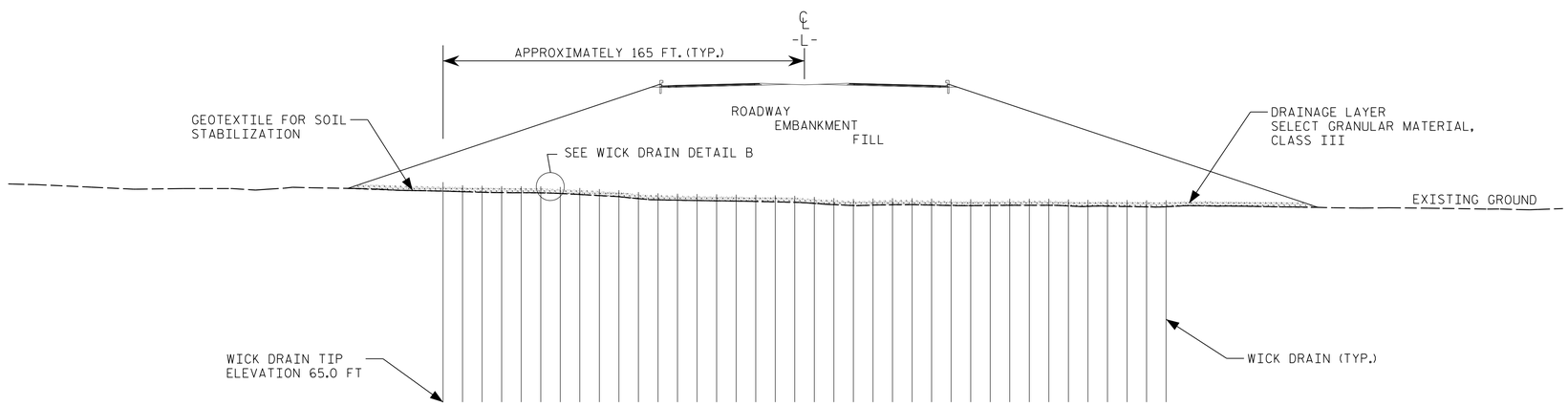

GROUND IMPROVEMENT END BENT 2 APPROACH CROSS SECTION

NOT TO SCALE

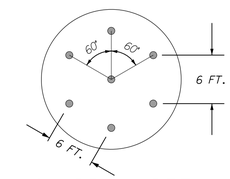

WICK DRAIN DETAIL A

NOT TO SCALE

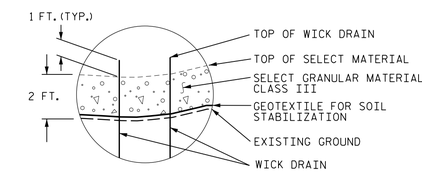

WICK DRAIN DETAIL B

NOT TO SCALE

NOTES

1. FOR WICK DRAINS, SEE INSTALLATION OF VERTICAL WICK DRAINS AND DRAINAGE LAYER SPECIAL PROVISION.
2. GEOTEXTILE FOR SOIL STABILIZATION SHALL BE PLACED ON EXISTNG GROUND AS SHOWN ON THE PLANS OR DIRECTED BY THE ENGINEER.
3. THE DRAINAGE LAYER OF SELECT GRANULAR MATERIAL, CLASS III SHALL BE INSTALLED AS SHOWN ON THE PLANS OR DIRECTED BY THE ENGINEER.
4. INSTALL WICK DRAINS AS DIRECTED BY PROVISIONS, PLANS, AND/OR ENGINEER AFTER THE SELECT GRANULAR MATERIAL, CLASS III HAS BEEN PLACED AND COMPACTED. WICK DRAINS SHALL PENETRATE THE SELECT GRANULAR MATERIAL, CLASS III AND SHALL BE INSTALLED TO THE LENGTH SHOWN ON THE PLANS AND/OR DIRECTED BY THE ENGINEER.
5. PRE-AUGERING MAY BE REQUIRED TO INSTALL THE WICK DRAINS. IF PRE-AUGERING IS NECESSARY, THE COST OF PRE-AUGERING IS INCIDENTAL TO THE COST OF THE WICK DRAINS.
6. CONSTRUCT THE ROADWAY EMBANKMENT FROM STA. 189+00 -L- TO STA. 192+25 -L- IN THE FOLLOWING STAGES:
   STAGE 1: CONSTRUCT 35+/- FEET OF EMBANKMENT HEIGHT AND WAIT TWO MONTHS.
   STAGE 2: CONSTRUCT EMBANKMENT TO FINISHED GRADES AND WAIT THREE MONTHS.
7. OBSERVICE A TOTAL FIVE MONTH OF EMBANKMENT WAITING PERIOD FROM STA. 189+00 -L- TO 192+25 -L- BEFORE BEGINNING FINAL GRADING OR PLACEMENT OF UTILITIES.
8. WAITING PERIOD FOR END BENT 2 BEGINS AFTER CONSTRUCTING THE EMBANKMENT TO FINISHED GRADE.
9. FOR SETTLEMENT GAUGE, SEE SECTION 235 OF THE STANDARD SPECIFICATIONS AND ROADWAY STANDARD DRAWING 235.01.

PREPARED BY: ALEXANDER, M. J.	DATE: 3/20/19
REVIEWED BY: NASH, A. A.	DATE: 3/20/19

Prepared in the Office of:

Terracon
Consulting Engineers and Scientists
2401 BRENTWOOD ROAD, SUITE 107
RALEIGH, NORTH CAROLINA 27604
NC REGISTERED ENGINEERING FIRM: F-0869
NC REGISTERED GEOLOGIC FIRM: C-367

NORTH CAROLINA DEPARTMENT OF TRANSPORTATION DIVISION OF HIGHWAYS

GEOTECHNICAL ENGINEERING UNIT

GROUND IMPROVEMENT CROSS SECTIONS AND NOTES

REVISIONS

NO.	BY	DATE	NO.	BY	DATE
1			3		
2			4		

PROJECT REFERENCE NO.	SHEET NO.
R-2582A	2G-4

GEOTECHNICAL ENGINEER

NORTH CAROLINA PROFESSIONAL SEAL 022246 ENGINEER SCOTT A. HIDDEN

DocuSigned by: Scott A. Hidden 4/17/2019
F76DCAEB0EF4C9...
SIGNATURE DATE

ENGINEER

SIGNATURE DATE

DOCUMENT NOT CONSIDERED FINAL UNLESS ALL SIGNATURES COMPLETED

GROUNDWATER CONDITION (SEE NOTE 6)	H SHORING HEIGHT (FT)	SLOPE OR SURCHARGE CASE WITH NO TRAFFIC IMPACT					SURCHARGE CASE WITH TRAFFIC IMPACT				
		SHEET PILES		H-PILES WITH TIMBER LAGGING			SHEET PILES		H-PILES WITH TIMBER LAGGING		
		MINIMUM REQUIRED EMBEDMENT (FT)	MINIMUM REQUIRED SECTION MODULUS (IN^3/FT)	MINIMUM REQUIRED EMBEDMENT* (FT) (SEE NOTE 10)			MINIMUM REQUIRED EMBEDMENT (FT)	MINIMUM REQUIRED SECTION MODULUS (IN^3/FT)	MINIMUM REQUIRED EMBEDMENT* (FT) (SEE NOTE 10)		
				HP 10x42	HP 12x53	HP 14x73			HP 10x42	HP 12x53	HP 14x73
GROUNDWATER ELEVATION BEWTEEN BOTTOM OF SHORING AND PILE TIP	< 6	11.5	4.5	11.5	11.5	11.5	16.0	12.0	13.0	13.0	13.0
	7	13.0	7.0	13.0	13.0	13.0	17.0	14.5	14.5	14.5	14.5
	8	15.0	10.0	--	15.0	15.0	18.0	17.0	--	15.5	15.5
	9	17.0	14.0	--	17.0	17.0	19.0	20.0	--	17.0	17.0
	10	18.5	19.5	--	--	18.5	20.0	23.5	--	--	18.5
	11	20.5	26.0	--	--	--	21.0	28.0	--	--	20.0
	12	22.5	33.0	--	--	--	22.0	33.0	--	--	21.5
GROUNDWATER ELEVATION BELOW PILE TIP	< 6	7.5	3.0	8.0	8.0	8.0	11.0	10.0	9.5	9.5	9.5
	7	8.5	4.5	9.5	9.5	9.5	12.0	12.0	10.5	10.5	10.5
	8	10.0	6.5	10.5	10.5	10.5	12.5	14.0	11.5	11.5	11.5
	9	11.0	9.5	--	12.0	12.0	13.5	16.5	--	12.5	12.5
	10	12.5	13.0	--	--	13.5	14.0	19.5	--	13.5	13.5
	11	13.5	17.0	--	--	14.5	15.0	22.5	--	--	14.5
	12	15.0	21.5	--	--	16.0	16.0	25.5	--	--	15.5

MINIMUM REQUIRED EMBEDMENT AND SECTION MODULUS

*DO NOT USE H-PILES WITH TIMBER LAGGING FOR GROUNDWATER CONDITION, SHORING HEIGHT AND H-PILE SIZE SHOWN IF MINIMUM REQUIRED EMBEDMENT IS "--".

NOTES:

1. AT THE CONTRACTOR'S OPTION, USE STANDARD TEMPORARY SHORING AS NOTED IN THE PLANS.
2. FOR STANDARD TEMPORARY SHORING, SEE STANDARD SHORING PROVISION.
3. STANDARD TEMPORARY SHORING IS BASED ON THE FOLLOWING IN-SITU ASSUMED SOIL PARAMETERS:
   UNIT WEIGHT, γ = 120 PCF
   FRICTION ANGLE, ϕ = 30 DEGREES
   COHESION, c = 0 PSF
4. DO NOT USE STANDARD TEMPORARY SHORING IF ASSUMED SOIL PARAMETERS ARE NOT APPLICABLE.
5. DO NOT USE STANDARD TEMPORARY SHORING WHEN VERY LOOSE OR SOFT SOIL OR MUCK IS WITHIN THE EMBEDMENT DEPTH.
6. USE GROUNDWATER ELEVATION NOTED IN THE PLANS. IF NO GROUNDWATER ELEVATION IS SHOWN IN THE PLANS, USE "GROUNDWATER ELEVATION BETWEEN BOTTOM OF SHORING AND PILE TIP" FOR GROUNDWATER CONDITION. DO NOT USE STANDARD TEMPORARY SHORING IF GROUNDWATER IS ABOVE BOTTOM OF SHORING.
7. AT THE CONTRACTOR'S OPTION OR IF AVAILABLE CLEAR DISTANCE IS LESS THAN THE MINIMUM REQUIRED FOR CONCRETE BARRIER, SET BARRIER NEXT TO AND UP AGAINST TRAFFIC SIDE OF PILES AND USE "SURCHARGE CASE WITH TRAFFIC IMPACT".
8. AT THE CONTRACTOR'S OPTION OR IF AVAILABLE CLEAR DISTANCE IS LESS THAN 4' FOR TEMPORARY GUARDRAIL, ATTACH GUARDRAIL TO TRAFFIC SIDE OF PILES AS SHOWN IN THE PLANS AND USE "SURCHARGE CASE WITH TRAFFIC IMPACT".
9. MINIMUM REQUIRED EXTENSION IS 6" FOR "SLOPE OR SURCHARGE CASE WITH NO TRAFFIC IMPACT" AND 32" FOR "SURCHARGE CASE WITH TRAFFIC IMPACT".
10. MINIMUM REQUIRED EMBEDMENT FOR H-PILES WITH TIMBER LAGGING IS BASED ON DRIVEN H-PILES AT MAXIMUM 6' SPACING. AT THE CONTRACTOR'S OPTION, EMBEDMENT DEPTHS MAY BE REDUCED BY 25% FOR DRILLED-IN H-PILES.
11. SUBMIT A "STANDARD TEMPORARY SHORING SELECTION FORM" AT LEAST 7 DAYS BEFORE STARTING TEMPORARY SHORING CONSTRUCTION. UP TO 3 SHORING LOCATIONS MAY BE INCLUDED ON EACH FORM. STANDARD SHORING SELECTION FORMS ARE AVAILABLE FROM: connect.ncdot.gov/resources/Geological/Pages/Geotech_Forms_Details.aspx
12. CONTACT THE ENGINEER IF PILES DO NOT ATTAIN THE MINIMUM REQUIRED EMBEDMENT.

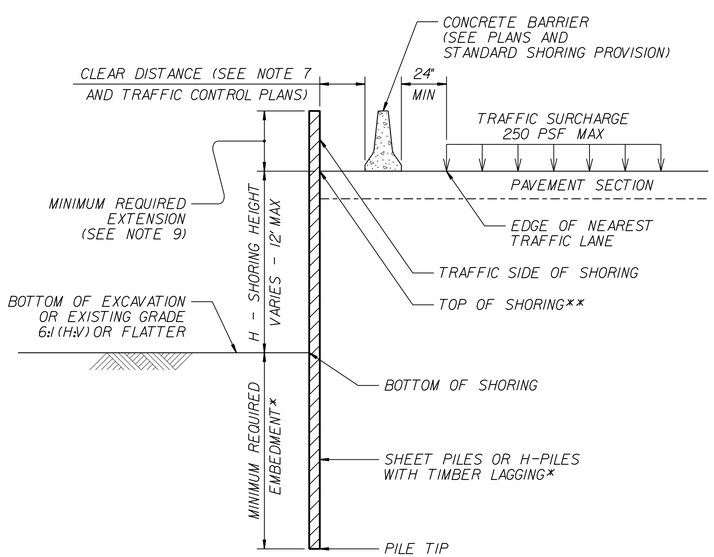

CONCRETE BARRIER

**TOP OF SHORING = EDGE OF PAVEMENT

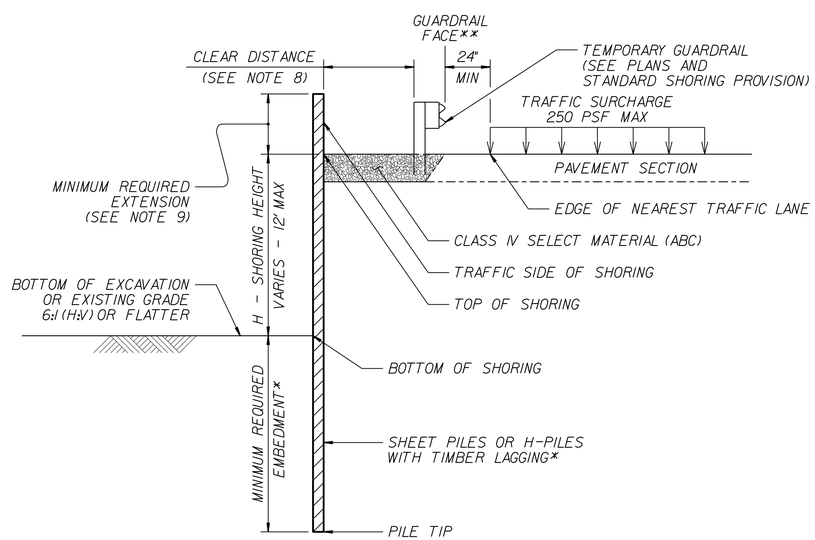

TEMPORARY GUARDRAIL

**GUARDRAIL FACE = EDGE OF PAVEMENT

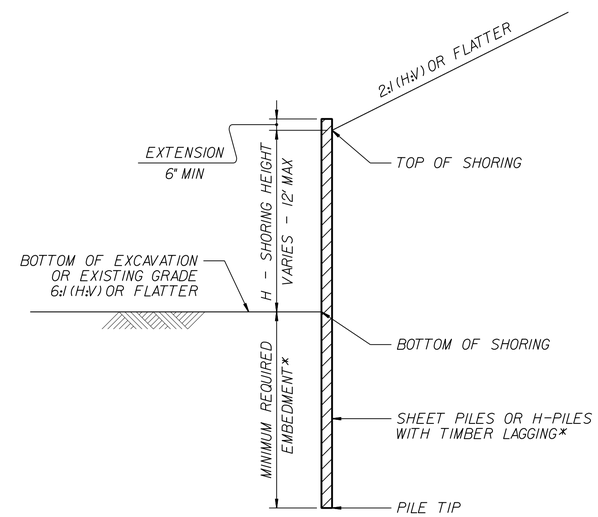

STANDARD TEMPORARY SHORING

(SLOPE CASE)
*SEE TABLE ABOVE.

STANDARD TEMPORARY SHORING

(SURCHARGE CASE)
*SEE TABLE ABOVE.

NORTH CAROLINA DEPARTMENT OF TRANSPORTATION DIVISION OF HIGHWAYS

GEOTECHNICAL ENGINEERING UNIT

STANDARD DETAIL NO. 1801.01

STANDARD TEMPORARY SHORING

DATE: 11-19-13

PROJECT REFERENCE NO.	SHEET NO.
R-2582A	2G-5

GEOTECHNICAL ENGINEER

NORTH CAROLINA PROFESSIONAL SEAL 022246 ENGINEER SCOTT A. HIDDEN

DocuSigned by: Scott A. Hidden 4/17/2019
E760CAEB96FC4D3...
SIGNATURE DATE

ENGINEER

SIGNATURE DATE

DOCUMENT NOT CONSIDERED FINAL UNLESS ALL SIGNATURES COMPLETED

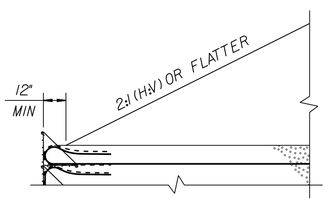

SLOPE CASE

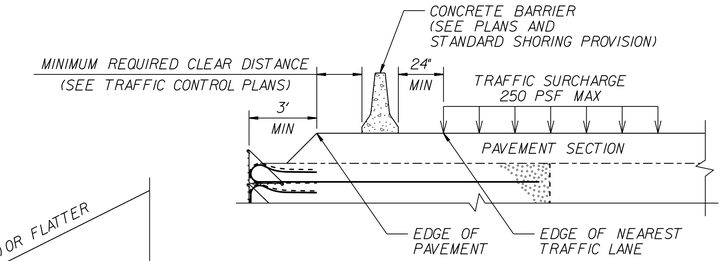

SURCHARGE CASE

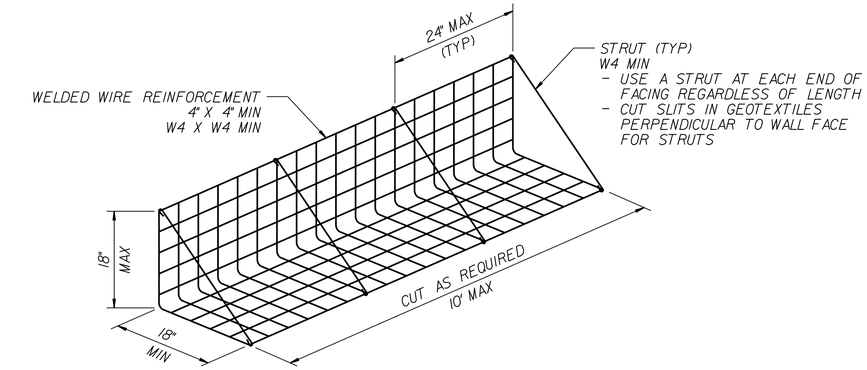

FACING DETAIL

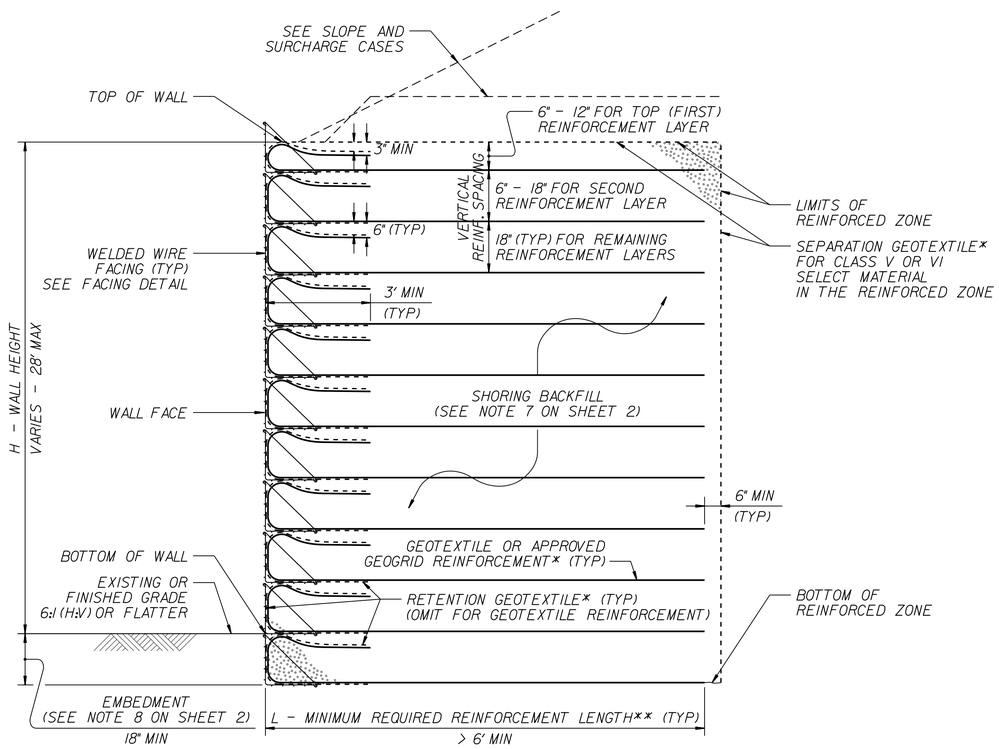

STANDARD TEMPORARY WALL

(FOR STANDARD TEMPORARY WALLS ON STRUCTURES, SEE TEMPORARY WALL ON STRUCTURE DETAIL ON SHEET 2.)
*SEE GEOSYNTHETIC PLACEMENT DETAILS ON SHEET 2.
**SEE REINFORCEMENT TABLES ON SHEET 3.

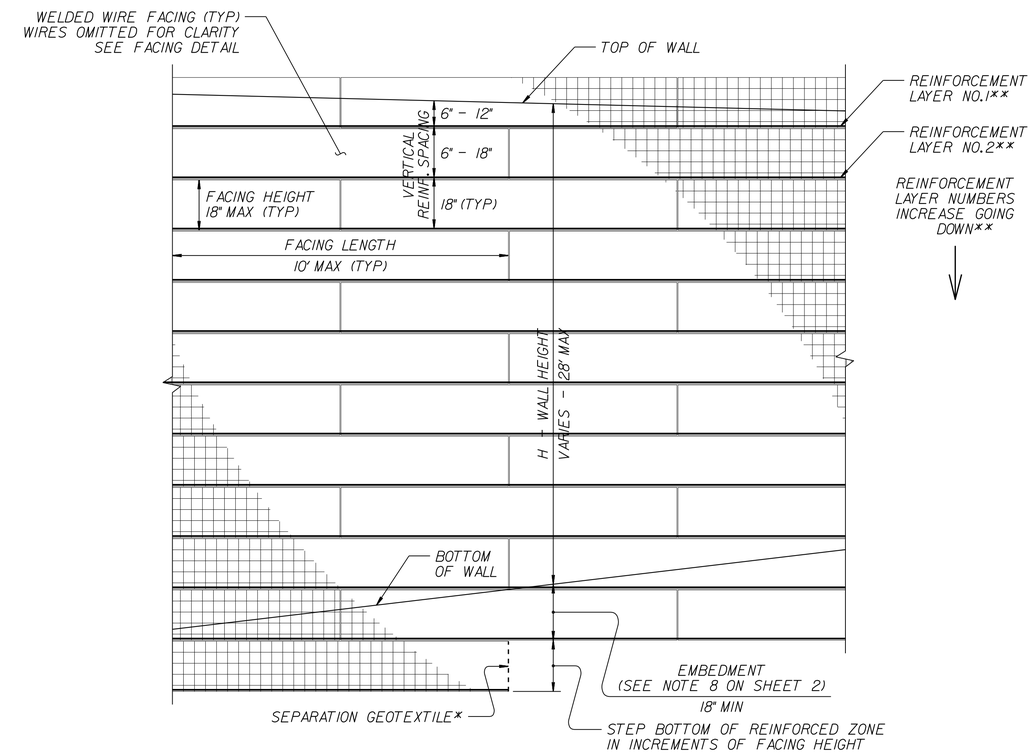

STANDARD TEMPORARY WALL – PARTIAL ELEVATION

*SEE GEOSYNTHETIC PLACEMENT DETAILS ON SHEET 2.
**SEE REINFORCEMENT TABLES ON SHEET 3.

STATE OF NORTH CAROLINA DEPARTMENT OF TRANSPORTATION

NORTH CAROLINA DEPARTMENT OF TRANSPORTATION DIVISION OF HIGHWAYS

GEOTECHNICAL ENGINEERING UNIT

STANDARD DETAIL NO. 1801.02

STANDARD TEMPORARY WALL SHEET 1 OF 3

DATE: 11-19-13

PROJECT REFERENCE NO.	SHEET NO.
R-2582A	2G-6

GEOTECHNICAL ENGINEER

NORTH CAROLINA PROFESSIONAL SEAL 022246 ENGINEER SCOTT A. HIDDEN

DocuSigned by: Scott A. Hidden 4/17/2019
E760CAEB96FC4D3... SIGNATURE DATE

ENGINEER

SIGNATURE DATE

DOCUMENT NOT CONSIDERED FINAL UNLESS ALL SIGNATURES COMPLETED

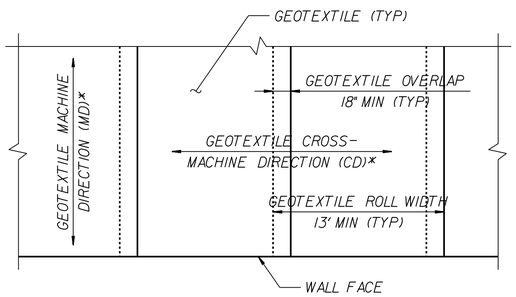

GEOTEXTILE PLACEMENT

(100% COVERAGE MIN FOR GEOTEXTILE REINFORCEMENT)

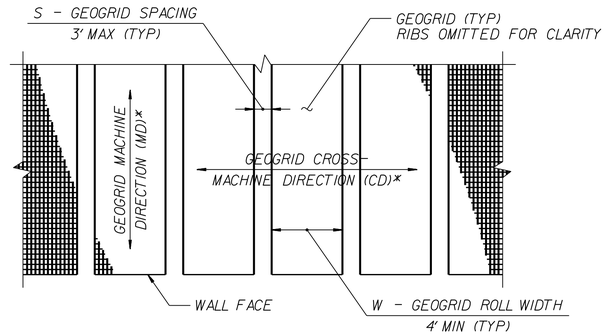

GEOGRID PLACEMENT

(80% COVERAGE MIN FOR GEOGRID REINFORCEMENT – $\frac{W}{W+S} \times 100 \geq 80\%$, SEE NOTE 11)

GEOSYNTHETIC PLACEMENT DETAILS

(PLAN VIEW)

*SEE NOTE 12.

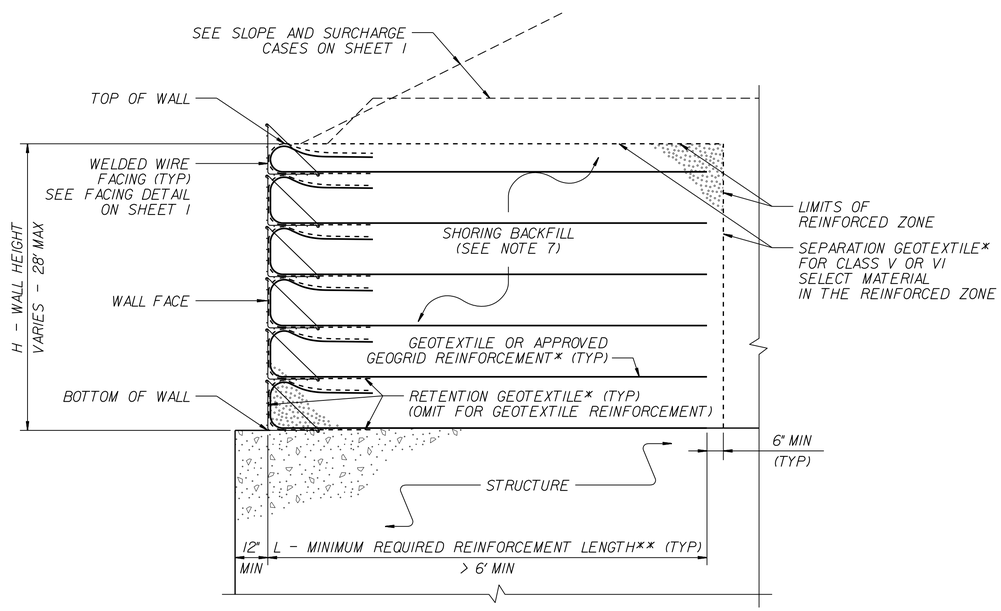

TEMPORARY WALL ON STRUCTURE DETAIL

*SEE GEOSYNTHETIC PLACEMENT DETAILS.

**SEE REINFORCEMENT TABLES ON SHEET 3.

NOTES:

1. AT THE CONTRACTOR'S OPTION, USE STANDARD TEMPORARY WALLS AS NOTED IN THE PLANS.
2. FOR STANDARD TEMPORARY WALLS, SEE STANDARD SHORING PROVISION.
3. STANDARD TEMPORARY WALLS ARE BASED ON THE FOLLOWING IN-SITU ASSUMED SOIL PARAMETERS:
   UNIT WEIGHT, γ = 120 PCF
   FRICTION ANGLE, ϕ = 30 DEGREES
   COHESION, c = 0 PSF
4. DO NOT USE STANDARD TEMPORARY WALLS IF ASSUMED SOIL PARAMETERS ARE NOT APPLICABLE.
5. DO NOT USE STANDARD TEMPORARY WALLS WHEN VERY LOOSE OR SOFT SOIL OR MUCK IS BELOW TEMPORARY WALLS.
6. USE GROUNDWATER ELEVATION NOTED IN THE PLANS. IF NO GROUNDWATER ELEVATION IS SHOWN IN THE PLANS, ASSUME GROUNDWATER DEPTH IS LESS THAN 7' BELOW BOTTOM OF REINFORCED ZONE. DO NOT USE STANDARD TEMPORARY WALLS IF GROUNDWATER IS ABOVE BOTTOM OF REINFORCED ZONE.
7. DO NOT USE A-2-4 SOIL FOR STANDARD TEMPORARY WALLS AROUND CULVERTS OR IN THE REINFORCED ZONE OF STANDARD TEMPORARY WALLS FOR SLOPE CASES. DO NOT USE CLASS VI SELECT MATERIAL IN THE REINFORCED ZONE OF STANDARD TEMPORARY WALLS WITH GEOTEXTILE REINFORCEMENT.
8. EMBEDMENT IS NOT REQUIRED FOR STANDARD TEMPORARY WALLS ON STRUCTURES OR ROCK AS DETERMINED BY THE ENGINEER.
9. DO NOT USE MORE THAN 4 DIFFERENT REINFORCEMENT STRENGTHS FOR EACH STANDARD TEMPORARY WALL.
10. GEOGRIDS ARE TYPICALLY APPROVED FOR ULTIMATE TENSILE STRENGTHS IN THE MACHINE DIRECTION (MD) AND CROSS-MACHINE DIRECTION (CD) OR SHORT-TERM DESIGN STRENGTHS FOR A 3-YEAR DESIGN LIFE IN THE MD BASED ON MATERIAL TYPE. THE LIST OF APPROVED GEOGRIDS WITH DESIGN STRENGTHS IS AVAILABLE FROM:
    connect.ncdot.gov/resources/Materials/Pages/Materials-Manual-by-Manual.aspx
    DEFINE MATERIAL TYPE FROM THE WEBSITE ABOVE FOR SHORING BACKFILL AS FOLLOWS:

MATERIAL TYPE	SHORING BACKFILL
BORROW	A-2-4 SOIL
FINE AGGREGATE	CLASS II, TYPE I OR CLASS III SELECT MATERIAL
COARSE AGGREGATE	CLASS V OR VI SELECT MATERIAL

    IF THE WEBSITE DOES NOT LIST A SHORT-TERM DESIGN STRENGTH FOR AN APPROVED GEOGRID, USE A SHORT-TERM DESIGN STRENGTH EQUAL TO THE ULTIMATE TENSILE STRENGTH DIVIDED BY 3.5 FOR THE GEOGRID REINFORCEMENT.
11. FOR GEOGRID REINFORCEMENT WITH LESS THAN 100% COVERAGE, STAGGER REINFORCEMENT SO GEOGRIDS ARE CENTERED OVER GAPS IN THE REINFORCEMENT LAYER BELOW.
12. AT THE CONTRACTOR'S OPTION, REINFORCEMENT MAY BE INSTALLED WITH THE MD PARALLEL TO THE WALL FACE IF BOTH OF THE FOLLOWING CONDITIONS OCCUR:
    - W (REINFORCEMENT ROLL WIDTH) ≥ (MINIMUM REQUIRED REINFORCEMENT LENGTH) + 4.5' AND
    - REINFORCEMENT STRENGTH IN CD ≥ MINIMUM REQUIRED REINFORCEMENT STRENGTH IN MD.
13. SUBMIT A "STANDARD TEMPORARY WALL SELECTION FORM" AT LEAST 7 DAYS BEFORE STARTING TEMPORARY WALL CONSTRUCTION. STANDARD SHORING SELECTION FORMS ARE AVAILABLE FROM:
    connect.ncdot.gov/resources/Geological/Pages/Geotech_Forms_Details.aspx
14. DO NOT PLACE SHORING BACKFILL OR REINFORCEMENT UNTIL EXCAVATION DIMENSIONS AND FOUNDATION MATERIAL ARE APPROVED.
15. FOR STANDARD TEMPORARY WALLS WITH PILE FOUNDATIONS IN THE REINFORCED ZONE, DRIVE PILES THROUGH REINFORCEMENT AFTER CONSTRUCTING TEMPORARY WALLS.
16. DO NOT SPLICE OR OVERLAP REINFORCEMENT SO SEAMS ARE PARALLEL TO THE WALL FACE.
17. CONTACT THE ENGINEER WHEN EXISTING OR FUTURE OBSTRUCTIONS SUCH AS FOUNDATIONS, PAVEMENTS, PIPES, INLETS OR UTILITIES WILL INTERFERE WITH REINFORCEMENT.
18. FOR STANDARD TEMPORARY WALLS WITH INTERIOR ANGLES LESS THAN 90 DEGREES, WRAP GEOSYNTHETICS AT ACUTE CORNERS AS DIRECTED BY THE ENGINEER.
19. FOR STANDARD TEMPORARY WALLS WITH TOP OF WALL WITHIN 5' OF FINISHED GRADE, REMOVE TOP FACING AND INCORPORATE TOP REINFORCEMENT LAYER INTO FILL WHEN PLACING FILL IN FRONT OF WALL.

STATE OF NORTH CAROLINA DEPARTMENT OF TRANSPORTATION

NORTH CAROLINA DEPARTMENT OF TRANSPORTATION
DIVISION OF HIGHWAYS

GEOTECHNICAL ENGINEERING UNIT

STANDARD DETAIL NO. 1801.02

STANDARD TEMPORARY WALL
SHEET 2 OF 3

DATE: 11-19-13

PROJECT REFERENCE NO.	SHEET NO.
R-2582A	2G-7

GEOTECHNICAL ENGINEER

NORTH CAROLINA PROFESSIONAL SEAL 022246 ENGINEER SCOTT A. HIDDEN

DocuSigned by: Scott A. Hidden 4/17/2019
F780CAF89EC4D9...
SIGNATURE DATE

ENGINEER

SIGNATURE DATE

DOCUMENT NOT CONSIDERED FINAL UNLESS ALL SIGNATURES COMPLETED

SLOPE OR SURCHARGE CASE	GROUNDWATER DEPTH BELOW BOTTOM OF REINFORCED ZONE (SEE NOTE 6 ON SHEET 2) (FT)	SHORING BACKFILL TYPE IN THE REINFORCED ZONE (SEE NOTE 7 ON SHEET 2)	H - WALL HEIGHT (FT)																								
			< 4	5	6	7	8	9	10	11	12	13	14	15	16	17	18	19	20	21	22	23	24	25	26	27	28
SLOPE CASE	> 0	CLASS II,TYPE I, CLASS III,CLASS V OR CLASS VI SELECT MATERIAL	6	6	7	8	9	11	12	13	13	14	15	16	17	18	19	20	21	22	23	24	24	25	26	27	27
SURCHARGE CASE	> 0 TO 7 FOR H < 20′ > 0 TO 10 FOR H ≥ 20′	ALL SHORING BACKFILL TYPES	6	7	7	8	8	9	9	10	11	11	12	12	13	14	14	15	16	17	17	18	19	19	20	21	22
	> 7 FOR H < 20′ > 10 FOR H ≥ 20′	A-2-4 SOIL	6	6	7	8	8	9	9	10	11	11	12	12	13	14	14	15	16	16	17	18	18	19	20	20	21
		CLASS II,TYPE I OR CLASS III SELECT MATERIAL	6	6	7	7	8	8	9	10	10	11	11	12	12	13	14	15	15	16	16	17	17	18	18	19	20
		CLASS V OR CLASS VI SELECT MATERIAL	6	6	7	7	7	8	8	9	9	10	10	11	12	13	13	14	14	15	15	16	17	17	18	19	19

L – MINIMUM REQUIRED REINFORCEMENT LENGTH (FT)

(FOR ALL REINFORCEMENT TYPES)

WALL HEIGHT (H) + EMBEDMENT (FT)	NUMBER OF REINFORCEMENT LAYERS*
2.5 - 4	3
4 - 5.5	4
5.5 - 7	5
7 - 8.5	6
8.5 - 10	7
10 - 11.5	8
11.5 - 13	9
13 - 14.5	10
14.5 - 16	11
16 - 17.5	12
17.5 - 19	13
19 - 20.5	14
20.5 - 22	15
22 - 23.5	16
23.5 - 25	17
25 - 26.5	18
26.5 - 28	19
28 - 29.5	20

*BASED ON VERTICAL REINFORCEMENT SPACING SHOWN ON SHEET 1.

REINFORCEMENT LAYER NUMBER*	SHORING BACKFILL TYPE IN THE REINFORCED ZONE (SEE NOTE 7 ON SHEET 2)				
	SLOPE CASE		SURCHARGE CASE		
	CLASS II,TYPE I OR CLASS III SELECT MATERIAL	CLASS V SELECT MATERIAL	A-2-4 SOIL	CLASS II,TYPE I OR CLASS III SELECT MATERIAL	CLASS V SELECT MATERIAL
1	2400	2400	2400	2400	2400
2	2400	2400	2400	2400	2400
3	2400	2400	2400	2400	2400
4	2400	2400	2500	2400	2400
5	2500	2400	3000	2400	2400
6	3000	2400	3500	2800	2400
7	3500	2700	4000	3200	2600
8	4000	3100	4500	3600	2900
9	4500	3500	5000	4000	3200
10	5000	3900	5500	4400	3500
11	5500	4300	6000	4800	3800
12	6000	4700	6500	5200	4100
13	6500	5100	7000	5600	4400
14	7000	5400	7500	6000	4700
15	7500	5800	8000	6400	5000
16	8000	6200	8500	6800	5300
17	8500	6600	9000	7200	5600
18	9000	7000	9500	7600	5900
19	9500	7400	10000	8000	6200
20	10000	7800	10500	8400	6500

GEOTEXTILE REINFORCEMENT
ULTIMATE TENSILE STRENGTH (LB/FT)

REINFORCEMENT LAYER NUMBER*	SHORING BACKFILL TYPE IN THE REINFORCED ZONE (SEE NOTE 7 ON SHEET 2)				
	SLOPE CASE		SURCHARGE CASE		
	CLASS II,TYPE I OR CLASS III SELECT MATERIAL	CLASS V OR CLASS VI SELECT MATERIAL	A-2-4 SOIL	CLASS II,TYPE I OR CLASS III SELECT MATERIAL	CLASS V OR CLASS VI SELECT MATERIAL
1	240	200	340	290	240
2	380	310	520	430	350
3	530	420	700	570	460
4	690	550	870	720	570
5	860	690	1050	860	680
6	1030	830	1220	1000	790
7	1200	970	1400	1150	900
8	1370	1110	1580	1290	1010
9	1550	1240	1750	1430	1120
10	1720	1380	1930	1580	1230
11	1890	1520	2100	1720	1340
12	2060	1660	2280	1860	1450
13	2240	1800	2450	2010	1560
14	2410	1940	2630	2150	1670
15	2580	2080	2800	2290	1780
16	2750	2220	2980	2440	1890
17	2930	2360	3160	2580	2000
18	3100	2500	3330	2720	2110
19	3270	2640	3510	2860	2220
20	3440	2780	3690	3000	2330

GEOGRID REINFORCEMENT
SHORT–TERM DESIGN STRENGTH (LB/FT)
(SEE NOTE 10 ON SHEET 2.)

MINIMUM REQUIRED REINFORCEMENT STRENGTH IN MD
(SEE NOTE 9 ON SHEET 2.)
*SEE PARTIAL ELEVATION ON SHEET 1
FOR REINFORCEMENT LAYER NUMBERING.

STATE OF NORTH CAROLINA DEPARTMENT OF TRANSPORTATION

NORTH CAROLINA
DEPARTMENT OF TRANSPORTATION
DIVISION OF HIGHWAYS

GEOTECHNICAL ENGINEERING UNIT

STANDARD DETAIL NO. 1801.02

STANDARD
TEMPORARY WALL
SHEET 3 OF 3

DATE: 11-19-13

COMPUTED BY: JRH DATE: 11-25-14
CHECKED BY: DATE:

PROJECT REFERENCE NO.	SHEET NO.
R-2582A	3B-01

Prepared in the Office of: SUMMIT DESIGN AND ENGINEERING SERVICES
NC FIRM LICENSE Nos P-0339
504 Meadowlands Drive
Hillsborough, NC 27278
(919) 732-3883
(919) 732-6676 (FAX)

DIVISION OF HIGHWAYS
STATE OF NORTH CAROLINA

NOTE: Earthwork quantities are calculated by the Roadway Design Unit. These earthwork quantities are based in part on subsurface data provided by the Geotechnical Engineering Unit.

SUMMARY OF EARTHWORK

IN CUBIC YARDS

LOCATION	UNCLASSIFIED EXCAVATION	UNDERCUT	EMBT + %	BORROW	WASTE
PHASE 1					
-Y1- 10+00 TO 13+50	203	476	1,023	840	496
-Y1- 13+50 TO 28+81	364	1,475	11,488	11,218	1,569
-L- 17+00 TO 18+93.88 RT	57		790	733	
-RPCD_R- 10+00 TO 13+14.16	120		2,609	2,489	
-I95RPD- 12+00 TO 18+08	911	45	580		376
-L- 20+29.88 TO 21+72.98 RT	31		906	875	
-L- 25+03.63 TO 26+67.91 RT	47		1,183	1,136	
-RPAB_R- 10+00 TO 13+14.16	6		6,334	6,328	
-I95RPA- 10+00 TO 17+17	8		8,314	8,306	
-L- 28+03.91 TO 37+00 RT	65		4,448	4,383	
-L- 17+00 TO 18+93.88 LT	140		745	605	
-I95RPC- 10+50 TO 13+51.37	60		1,024	964	
-L- 20+29.88 TO 21+72.98 LT	46		84	38	
-L- 25+03.63 TO 26+67.91 LT	74		809	735	
-I95RPB- 12+00 TO 18+37	42		11,655	11,613	
-L- 28+03.91 TO 39+00 LT	61		13,631	13,570	
-DRIVE- 10+00 TO 15+91	213		1,328	1,115	
-L- 39+00 TO 43+00 LT	132		6,795	6,663	
-Y3- 10+46.90 TO 12+00	173		263	90	
-L- 43+00 TO 61+00 LT	923	198	28,043	27,120	198
-L- 62+50 TO 91+00 RT	14,356	4,752	42,620	28,264	4,752
-L- 91+00 TO 103+50 RT	14,996	2,178	11,866	3,754	9,062
-L- 103+50 TO 121+00 RT	25,263	5,034	19,879	13,313	23,731
-L- 121+00 TO 125+00 RT	3,691	1,662	2,386	2,372	5,339
-L- 130+00 TO 15+00 LT/RT	6,631	3,262	116,943	116,522	9,472
-Y5- 11+17.29 TO 13+50.40	226	558	1,593	1,437	628
-Y5A- 11+65 TO 14+50	281	349	579	579	630
-L- 156+50 TO 166+00 LT/RT	4,562	3,642	26,423	22,960	4,741
-L- 166+00 TO 169+34.84 LT/RT		72	32,478	32,478	72
-L- 170+62.84 TO 186+50 LT/RT			588,791	588,791	
-L- 186+50 TO 192+28.46 LT/RT			379,968	379,968	
-L- 193+16.46 TO 197+88.27 LT/RT			172,413	172,413	
-Y9- 13+00 TO 19+13.21	1,069	701	1,528	459	701
-Y9- 20+49.21 TO 25+04.76	271	487	3,279	3,008	487
-Y9- 25+04.76 TO 29+87.86	815	472	2,433	1,621	475
-Y9- 31+23.86 TO 35+50	775	422	813	144	528
-L- 198+92 TO 216+50 LT/RT	5,328	2,472	281,090	281,003	7,713
-Y9RPA_R- 10+00 TO 13+14.16	3		2,823	2,820	
-Y9RPA- 22+50 TO 32+62.85	1,924	2,241	12,388	11,746	3,523
-Y9LPA- 12+50 TO 15+81.40			18,415	18,415	

LOCATION	UNCLASSIFIED EXCAVATION	UNDERCUT	EMBT + %	BORROW	WASTE
-Y9RPD_R- 10+00 TO 13+14.16	5		2,968	2,963	
-Y9RPD- 16+00 TO 28+29.50	182	858	28,336	28,154	858
-Y9LPD- 12+44.42 TO 16+77.99	66		31,323	31,257	
-Y10- 10+24 TO 11+30	30	46	69	42	49
-Y11- 10+50 TO 11+95.25	152	137	288	178	179
-L- 216+50 TO 226+00 LT/RT	388	27	77,976	77,976	415
-L- 226+00 TO 246+50 LT/RT	1,827	155	63,089	62,705	1,598
-L- 246+50 TO 280+00 LT/RT	63,149	7,610	243,604	243,604	61,640
-Y13A- 30+06.16 TO 41+08	924	1,229	13,077	13,077	1,761
-Y13A- 50+00.00 TO 56+26.88 (-L- 220+50.00 TO 226+00)	101	718	3,060	3,060	819
-Y13A- 56+26.88 TO 30+06.16 (-L- 226+00.00 TO 253+00)	1,314	2,246	103,490	103,490	2,922
-Y13- 10+47 TO 15+00	1,049	310	157	157	827
-Y14- 14+50 TO 17+50	1,344	1,578	2,090	2,090	2,922
-L- 280+00 TO 286+00 RT	6,473	659	8,440	5,600	4,292
-L- 286+00 TO 286+28 RT			1,027	1,027	
-L- 286+28 TO 306+50 RT	4,037	2,698	35,635	35,635	6,729
-L- 306+50 TO 336+50 RT	1,646		61,434	61,434	480
-Y16- 18+00 TO 19+45.45	12		230	230	12
-L- 336+50 TO 346+00 RT	1,277	1,034	11,347	11,347	1,753
-L- 346+00 TO 366+50 RT	2,141	2,970	24,524	24,524	4,857
-Y17- 10+00 TO 11+00	22	133	296	296	143
-L- 366+50 TO 396+50 RT	727	680	59,787	59,787	1,334
-L- 396+50 TO 406+00 RT	761	799	14,070	14,070	1,560
-L- 406+00 TO 426+50 RT	4,615	1,953	31576	31,576	6,568
-L- 426+50 TO 443+89.29 RT	1,462	1,257	26,020	26,020	2,670
PHASE I SUBTOTAL	**177,571**	**57,595**	**2,677,454**	**2,621,169**	**178,881**

5/9/06
05-APR-2019 08:41
R2582A_2019_sum.dgn
faith.johnke

COMPUTED BY: JRH DATE: 11-25-14
CHECKED BY: DATE:

PROJECT REFERENCE NO.	SHEET NO.
R-2582A	3B-02

Prepared in the Office of: SUMMIT DESIGN AND ENGINEERING SERVICES
NC FIRM LICENSE No: P-0339
504 Meadowlands Drive
Hillsborough, NC 27278
(919) 732-3883
(919) 732-6676 (FAX)

DIVISION OF HIGHWAYS
STATE OF NORTH CAROLINA

NOTE: Earthwork quantities are calculated by the Roadway Design Unit. These earthwork quantities are based in part on subsurface data provided by the Geotechnical Engineering Unit.

SUMMARY OF EARTHWORK

IN CUBIC YARDS

LOCATION	UNCLASSIFIED EXCAVATION	UNDERCUT	EMBT + %	BORROW	WASTE
PHASE II					
-L- 61+00 TO 91+00 LT	12,243	1,552	14,938	13,853	12,710
-L- 91+00 TO 103+50 LT	3,257	508	2,795	1,018	1,988
-L- 103+50 TO 121+00 LT	11,112	2,421	4,809	4,200	12,924
-Y4- 10+47 TO 12+00	56		385	329	
-L- 121+00 TO 130+00 LT	5,527	631	9,230	9,212	6,140
-DET_2- 13+00 TO 25+04.76	47		225	178	
-DET_3- 10+00 TO 17+84.86	1,790		680		1,110
-L- 150+00 TO 156+50 LT	514	582	15,864	15,472	704
-Y6- 10+47.63 TO 12+00	9	153	1,141	1,138	159
-L- 280+00 TO 286+00 LT	1,592	16	4,735	3,427	300
-L- 286+00 TO 310+00 LT	2,988	429	13,591	13,338	3,164
-Y15- 11+65 TO 13+00	39	223	375	342	229
-L- 310+00 TO 340+00 LT	1,612		35,111	34,170	671
-L- 340+00 TO 346+00 LT	585	7	2,300	1,807	99
-L- 346+00 TO 370+00 LT	1,393	245	8,456	8,122	1,304
-Y16- 20+68.76 TO 25+70	283	194	585	456	348
-L- 370+00 TO 400+00 LT	2,303	768	30,930	30,750	2,891
-L- 400+00 TO 406+00 LT	416	30	2,789	2,789	446
-L- 406+00 TO 430+00 LT	2,705	460	14,783	14,783	3,165
-L- 430+00 TO 443+89.29 LT	2,631	2,668	7,711	7,611	5,199
-L- 443+89.29 TO 456+11.86 LT/RT	5,540	988	15,479	15,228	6,277
-Y18- 10+48.24 TO 11+65	2	52	204	202	52
PHASE II SUBTOTAL	**56,644**	**11,927**	**187,115**	**178,424**	**59,880**

LOCATION	UNCLASSIFIED EXCAVATION	UNDERCUT	EMBT + %	BORROW	WASTE
PHASE III					
-Y2- 13+00 TO 13+93.92	30		149	119	
-L- 37+00 TO 62+50 RT	660	1	32,590	31,987	58
-L- 125+00 TO 130+00 RT	80	362	9,555	9,555	442
-L- 150+00 TO 156+50 RT	2,011	1,249	8,494	6,895	1,661
-DET_2 REMOVAL-	180		59		121
-DET_3 REMOVAL-	544		2,238	1,694	
PHASE III SUBTOTAL	**3,505**	**1,612**	**53,083**	**50,249**	**2,282**
SUMMARY TOTAL	237,720	71,134	2,917,652	2,849,842	241,043
MATERIAL FOR SHOULDER CONSTRUCTION			76,675	76,675	
ADD'L UNDERCUT (CONTIGENCY FOR EMBANKMENT STABILITY)		10,000	12,500	12,500	10,000
ADD'L UNDERCUT (CONTIGENCY FOR SUBGRADE STABILITY)		5,000	6,250	6,250	5,000
ADD'L UNDERCUT (GRADE POINT UNDERCUT)		3,000	3,750	3,750	3,000
SELECT GRANULAR MATERIAL IN LIEU OF BORROW			-92,500	-92,500	
SELECT GRANULAR MATERIAL, CLASS III			-10,700	-10,700	
WASTE IN LIEU OF BORROW				-1,562	-1,562
PROJECT TOTAL	237,720	89,134	2,913,627	2,844,255	257,481
5% TO REPLACE TOPSOIL ON BORROW PIT				142,213	
GRAND TOTAL	237,720	89,134	2,913,627	2,986,468	257,481
SAY	250,000	94,000		3,125,000	
PAVEMENT STRUCURE VOLUME = 100,000 CY					
DDE = 18,460 CY					

5/9/06
05-APR-2019 08:41
R:\Roadway\Proj\sum.dgn
fatih.ahnks