This electronic collection of documents is provided for the convenience of the user and is Not a Certified Document –

The documents contained herein were originally issued and sealed by the individuals whose names and license numbers appear on each page, on the dates appearing with their signature on that page.
This file or an individual page shall not be considered a certified document.

STATE	PROJECT	SHEET NUMBER
NC	BLRI OVER I-26	A01

NORTH CAROLINA DEPARTMENT OF TRANSPORTATION AND U.S. DEPARTMENT OF THE INTERIOR NATIONAL PARK SERVICE

BLUE RIDGE PARKWAY

PLANS FOR PROPOSED

PROJECT BLRI OVER I-26

BLUE RIDGE PARKWAY REALIGNMENT AND REPLACEMENT OF THE BRIDGE OVER I-26 NEAR MILE MARKER (MM) 391.79

BUNCOMBE COUNTY, NORTH CAROLINA

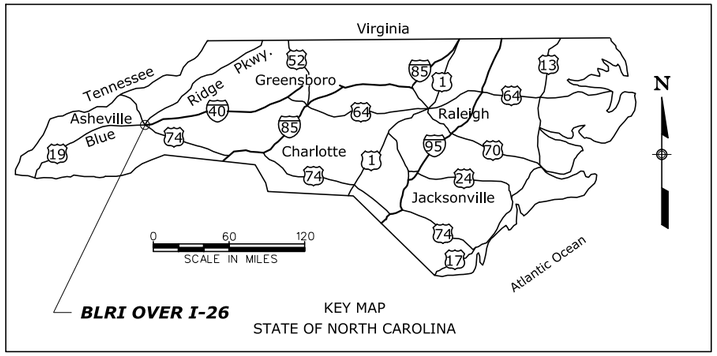

KEY MAP
STATE OF NORTH CAROLINA

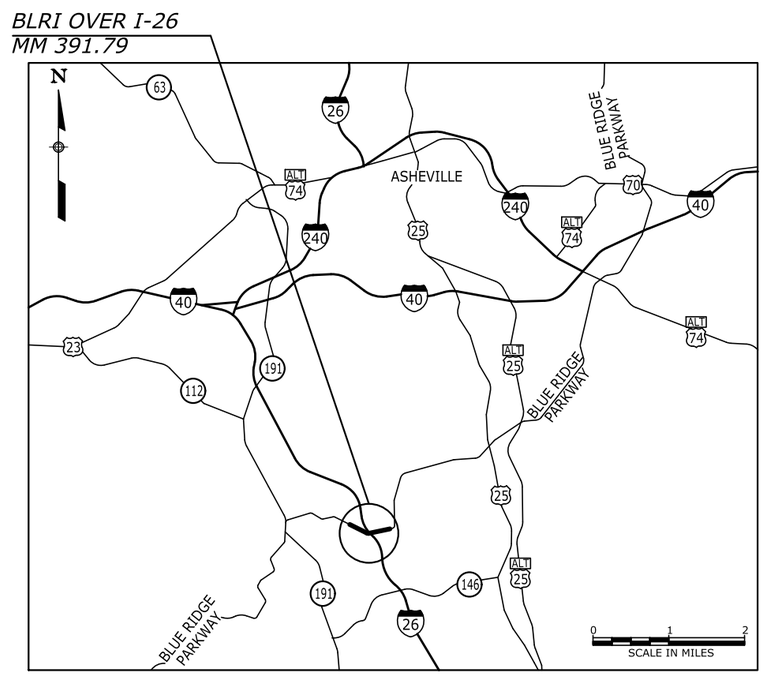

INDEX TO SHEETS

SHEET NO	DESCRIPTION
A01	Title Sheet
A02	Symbols and Abbreviations
A03	Location Map and Temporary Traffic Control
A04	Survey Information Sheet
A05-A06	Alignment Description
A07	Curve Information
B01-B07	Typical Sections
C01-C11	Summaries and Schedules
D01-D20	Parkway Plan and Profile and Details
E01-E03	Trails Plan and Profile
E04	Parking Area Layout Plans
F01-F05	Removals and Obliterations Plan
G01-G03	Reinforced Soil Slope (RSS) Profiles and Details
K01-K11	Drainage Cross Sections
K12-K18	Drainage Ditch Profiles and Details
M01-M05	Erosion and Sediment Control Narrative
M06-M15	Erosion and Sediment Control Plans
M16-M21	Grading Plans
M22-M27	Landscaping Plans
M28-M32	Erosion and Sediment Control, Grading and Landscaping Details
N01-N04	Temporary Traffic Control Plans and Detail
P01-P03	Signing and Striping Plans
R01-R228	Bridge Plans
T01-T25	Roadway Cross Sections
U01-U04	Trail 1 Cross Sections
V01-V02	Trail 2 Cross Sections

811 Know what's below. Call before you dig.

DESCRIPTION OF PROJECT

IMPROVEMENT: Grading, paving, bridge replacement, constructing reinforced soil slopes, drainage improvements and other miscellaneous work

PROJECT LENGTH: 0.69 Mile
LANE MILES: 1.38

ROAD:	WIDTH	SURFACE	BASE	SUBGRADE
Blue Ridge Parkway (New)	20'	1.5" Asphalt	3.5" Asphalt	8" Aggregate
Mountains to Sea Trail	5'	4" Aggregate	N/A	N/A

BRIDGE: I-26 Bridge, 5140-124P , 7/14/2017

DESIGN DESIGNATION:

ADT (2018)	2135
ADT (2048)	4270
DHV	512
D	50/50
%Truck	0%
V (MPH)	50
C/A	None
e(max)	10%

SPECIFICATIONS:

"North Carolina Department of Transportation, Raleigh
Standard Specifications for Roads and Structures, January 2018"

Description	Station to Station	Length (miles)	RIP Milepost/ Cycle #
Realignment of Rte 0001DB	500+50 to 530+50	0.58	392.847/Cycle 5
Mountains to Sea Trail 1	600+25.84 to 602+52.04	0.04	
Mountains to Sea Trail 2	700+06.00 to 700+58.41	0.01	
Mountains to Sea Trail 3	800+51.51 to 803+55.52	0.06	

DocuSigned by:
D36FE0007A6C466...
SIGNATURE **P.E.** 3/26/2019

NORTH CAROLINA PROFESSIONAL SEAL 047055 ENGINEER HRATCH PAKHCHANIAN

PLANS PREPARED BY

EASTERN FEDERAL LANDS HIGHWAY DIVISION
STERLING, VIRGINIA
MARCH 2019

Project Manager	Lead Designer
M. TESSITORE	S. FORONDA

\\fhfl15fileserve.fhd.fhwa.dot.gov\data\PROJECTS_STATE_DOT\NC\blri_i26_nepa\Proj_Dev\CADD\From_Eng_Support\As_Requested_3_2017\A01-BLRI_I_26_NEPA_ttl.dgn
19-Mar-2019 10:46 AM

STATE	PROJECT	SHEET NUMBER
NC	BLRI OVER I-26	A02

Abutment	Abut.
Aggregate	aggr.
Ahead	AH
Alternate	alt.
Average daily traffic	ADT
Back	BK
Backslope Anchor Terminal	BAT
Balance point	BP
Bearing	brg.
Beginning	beg.
Bench mark	BM
Broken White	BW
Centerline	℄
Center to center	cc, c-c or c. to c.
Centers	ctrs.
Clear	clr.
Column	col.
Connection	conn.
Construction joint	Constr. jt.
Continuous	cont.
Corrugated metal pipe	CMP
Culvert	culv.
Curve central angle (spiral curve transitions)	Δ_c
Curve total angle (curve delta or deflection)	Δ
Design hourly volume	DHV
Design speed	V
Diagonal	diag.
Diameter	D, dia., or
Diaphragm	diaph.
Distance	dist.
Double Solid Yellow	DSY
Drawing(s)	dwg(s), or drwg(s)
Drop Inlet	DI
East	E
Edge of pavement	EP or EOP
Elevation	elev.
Elevation with number	El. 94.161 [El. 94.16]
Embankment	emb.
End section	ES
Equation	EQ or eq.
Equivalent Single Axle Load	ESAL
Excavation	exc.
Expansion joint	exp. jt.
Flared Anchor Terminal	FAT
Footing	ftg.
Galvanized	galv.
Gage(gauge)	ga.
Gyratory Mix, Asphalt Concrete Pavement	GACP
Headwall	hdwl.
Hexagon	hex.
High water	HW
Inside diameter	ID
Joint	jt.
Lamination	lam.
Latitude	lat.
Left	lt., Lt. or LT
Length of curve(simple curve)	L
Length of curve (spiral curve transition)	Lc
Length of spiral	Ls
Longitudinal(longitude)	long.
Low water	LW
Mainline	M.L.
Material	matl.
Maximum	max.
Mile[Kilometer] post	M.P[K.P.]
Minimum	min.
Monument	mon. or MON
Mechanically stabilized embankment	MSE
Nominal Max. Size Aggregate	NMSA
Normal crown	NC or NCR
North	N
Original ground	OG
Out to out	o. to o.
Outside diameter	OD
On centers	o. c.
Pavement	pvmt.
Plate	pl.
Point of compound curve	PCC
Point of curve	PC
Point of curve to spiral	PCS or CS
Point of intersection	PI
Point of spiral to curve	PSC or SC
Point of spiral to reverse spiral	SRS
Point of spiral to tangent	PST or ST
Point of tangent	PT
Point of tangent to spiral	PS or TS
Point on curve	POC
Point on spiral	POS
Point on tangent	POT
Radius	R
Reinforcement (reinforced)	reinf.
Required	reqd.
Right	Rt., rt.or RT
Right-of-way	R/W
Roadway	Rdwy.
Route	Rte.
Section	Sec.
Solid White	SW
South	S
Spacing, spaces or spaced	spa.
Spiral central angle	s
Standard	std.
Station	Sta.
Steel Backed Timber	SBT
Stiffener	stiff.
Stringer	stgr.
Structure	struc.
Superelevation rate	e
Symmetrical	sym.
Tangent distance (tangent length)	T
Tangent distance (spiral curve transition)	Ts
Temporary benchmark	TBM
Temporary construction easement	TCE
Thread	thd.
Township	T.
Typical	typ.
Vehicle per hour	vph
Vertical point of intersection	VPI
West	W

NATIONAL BOUNDARY
STATE BOUNDARY
COUNTY BOUNDARY
CITY BOUNDARY
TOWNSHIP or RANGE LINE
SECTION LINE
¼ SECTION LINE
1/16 SECTION LINE
NATIONAL PARK or FOREST BOUNDARY
PROPERTY LINE
TRAVERSE POINT (Horizontal & Vertical) Top of Triangle Points North — T-45 / 2,645.9
TRAVERSE POINT (Horizontal) — T-3
BRASS CAP
STEEL PIN
HUB & TACK
SPOT ELEVATION — x 99.9
COORDINATE GRID TICK

	EXISTING	PROPOSED
RIGHT-OF-WAY LINE	R/W	R/W
RIGHT-OF-WAY LINE with MONUMENT	R/W	R/W
SECTION CORNER	FOUND 36 31 1 6	PROJECTED 36 31 1 6
¼ SECTION CORNER	15 22	15 22
1/16 SECTION		
PROPERTY CORNER		No Symbol
PARCEL NUMBER	No Symbol	400
EASEMENT (Permanent - Construction)	P/E	C/E
ROUTE NUMBERS	26 INTERSTATE, 25 U.S., 694 STATE	

SLOPE STAKE — TOP OF CUT, TOE OF FILL, TRANSITION
ROADWAY, EXISTING — EOP, EOG
RAILROAD — SINGLE TRACK, MULTIPLE TRACK
TRAIL
INTERMITTENT DRAINAGE/ SMALL CREEK
SPRING
LARGE CREEK/RIVER
LAKE, POND or RESERVOIR; MARSHLAND
PAVEMENT REMOVAL/ROADWAY OBLITERATION
FULL DEPTH PAVEMENT
SIDEWALK ASPHALT/CONCRETE
MILL AND OVERLAY
OVERLAY
SILT FENCE — SF, DB
DIVERSION BERM
DIVERSION CHANNEL
CHECK DAM
RIPRAP/CULVERT RIPRAP
BORING LOCATION — B-1
TEST PIT — TP-1
NORTH ARROW — N
MATERIAL SOURCE

AREA PATTERN

	EXISTING	PROPOSED
FENCE	X X	XX XX
GATE with FENCE	X X	XX XX
CATTLEGUARD		
GUARDRAIL		
MEDIAN & SIDE (CONCRETE) BARRIER		
SIGNS — POST MOUNTED		
SIGNS — PORTABLE	No Symbol	
RETAINING WALL		wall face
OVERHEAD(POWER POLE) UTILITIES P=Electrical for transmission line E=Electrical for distribution line T=Telephone, E&T=Joint Electrical and Telephone FO=Fibre optics	P	P
SUPPORT POLE with ANCHOR		
TELEPHONE BOOTH or PEDESTAL	TB or TP	TB or TP
STREET LIGHT	or	or
UNDERGROUND UTILITIES G=gas, O=oil, P=power, SS=sanitary sewer, SD=storm drain, T=telephone, W=water E=electrical, FO=fiber optics	W	W
BRIDGE		
PIPE CULVERT (arrow shows flow)		
PIPE CULVERT with END SECTION		
PIPE CULVERT with HEADWALL		
CULVERT with DROP INLET		
BOX CULVERT		
UNDERDRAIN	UD	UD
BUILDING		
TREELINE; TREE		

PROJECT SPECIFIC SYMBOLS AND ABBREVIATIONS:-

PAVEMENT RECONSTRUCTION
AGGREGATE SURFACE
SUPERELEVATION TRANSITION
TEMPORARY RISER BASIN
LOD — LIMITS OF DISTURBANCE
TEMPORARY INLET PROTECTION
PAVED WATERWAY
EROSION CONTROL MATTING
EARTH BERM AT TOP OF CUT
CURB RAMP
7-DAY GROUND STABILIZATION AREA
REINFORCED SOIL SLOPES (RSS)

SY, SQYD	SQUARE YARD
CY, CUYD	CUBIC YARD
CF, CUFT	CUBIC FOOT
VAR.	VARIES
RECP	ROLLED EROSION CONTROL PRODUCT
RC	REINFORCED CONCRETE
	SLOPE ROUNDING LIMIT

U.S. DEPARTMENT OF TRANSPORTATION
FEDERAL HIGHWAY ADMINISTRATION
EASTERN FEDERAL LANDS HIGHWAY DIVISION
STERLING, VIRGINIA

BLUE RIDGE PARKWAY

SYMBOLS AND ABBREVIATIONS

21-Dec-2018 08:35 AM M:\PROJECTS_STATE_DOT\NC\dir1_I26_nepa\Proj_Dev\CADD\From_Eng_Support\As_Requested_3_2017\A02-BLRI_I_26_NEPA_symdgn

STATE	PROJECT	SHEET NUMBER
NC	BLRI OVER I-26	A03

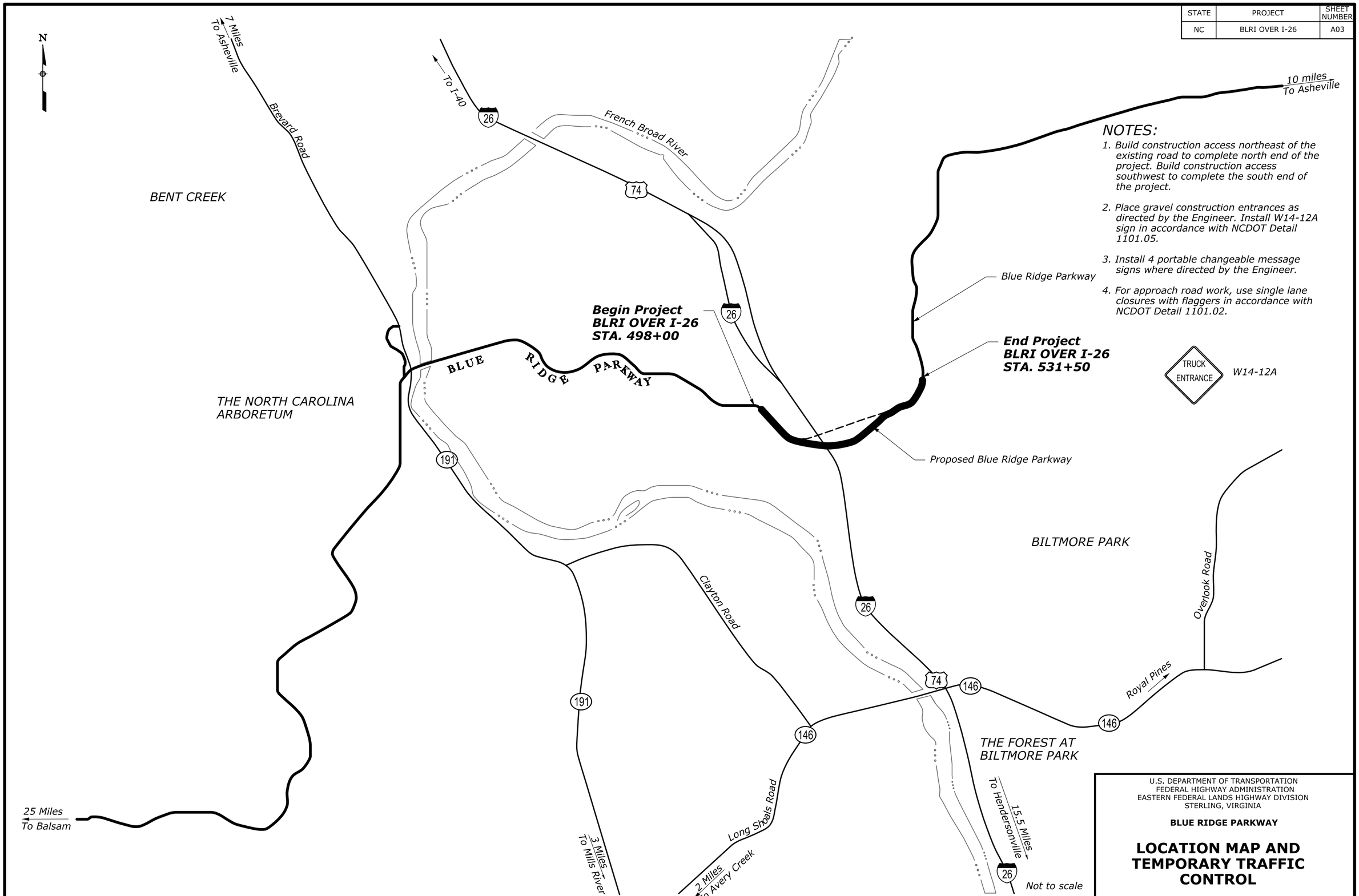

NOTES:

1. Build construction access northeast of the existing road to complete north end of the project. Build construction access southwest to complete the south end of the project.
2. Place gravel construction entrances as directed by the Engineer. Install W14-12A sign in accordance with NCDOT Detail 1101.05.
3. Install 4 portable changeable message signs where directed by the Engineer.
4. For approach road work, use single lane closures with flaggers in accordance with NCDOT Detail 1101.02.

U.S. DEPARTMENT OF TRANSPORTATION
FEDERAL HIGHWAY ADMINISTRATION
EASTERN FEDERAL LANDS HIGHWAY DIVISION
STERLING, VIRGINIA

BLUE RIDGE PARKWAY

LOCATION MAP AND TEMPORARY TRAFFIC CONTROL

08-Dec-2018 08:49 PW$TIME$ M:\PROJECTS_STATE_DOT\NC\blrl_I26_nepa\Proj_Dev\CADD-From_Eng_Support\As_Requested_3_2017\A03-BLRI_I_26_NEPA_loc.dgn

STATE	PROJECT	SHEET NUMBER
NC	BLRI OVER I-26	A04

Datum: NC GRID NAD83 NA 2011

PROJECT SURVEY CONTROL POINT LISTING

POINT NUMBER	NORTHING	EASTING	ELEVATION	TYPE
BY371	655004.538	938175.810	2243.060	MON
BY372	654623.792	938474.475	2257.500	MON
BY373	654524.870	938852.335	2261.290	MON
BY374	654686.559	939364.188	2267.560	MON
BY375	654835.610	939830.367	2262.010	MON
BY376	654961.462	940305.061	2231.330	MON
BY387	655288.784	937780.032	0.000	MON
100	654847.629	938265.226	2248.675	NAIL
101	654491.857	938981.353	2227.582	NAIL
102	654555.528	939425.180	2248.678	NAIL
103	654520.565	939298.840	2204.026	NAIL
104	654610.432	939524.408	2278.638	NAIL
105	654686.625	939728.510	2309.041	NAIL
106	654796.190	939917.154	2254.520	NAIL
107	654848.616	939929.773	2255.828	NAIL
108	654928.353	940162.542	2242.318	NAIL
109	654954.732	938419.566	2247.706	NAIL
110	654604.135	939398.935	2254.016	NAIL
111	654490.393	939723.026	2301.318	NAIL
112	654573.200	939788.788	2304.715	NAIL
113	654575.955	939981.977	2273.636	NAIL
114	654631.816	940125.061	2245.270	NAIL
115	654672.632	940259.176	2216.743	NAIL
116	654775.003	940265.051	2201.265	NAIL
117	654795.038	940483.893	2184.956	NAIL
20911	655236.623	937903.335	2235.069	NAIL

BOREHOLE DATA

POINT NUMBER	NORTHING	EASTING	ELEVATION	TYPE
21104	654502.891	938849.602	2259.870	BOR B1
21105	654488.681	938859.546	2259.915	BOR B2
21106	654487.733	939043.523	2205.572	BOR B4
21107	654501.941	939033.994	2206.379	BOR B3
21108	654734.777	938355.840	2253.423	BOR B9
21173	654524.230	939298.074	2204.042	BOR B5
21174	654516.196	939308.472	2203.464	BOR B6
21175	654574.588	939471.282	2265.822	BOR B7
21212	654632.744	939611.418	2295.994	BOR B8
21213	654674.003	939701.296	2311.122	BOR B10
21214	654722.563	939785.682	2295.379	BOR B11

STAKED CENTERLINE DATA

POINT NUMBER	NORTHING	EASTING	ELEVATION	TYPE	
21126	655285.366	937661.276	2231.292	PK	496+76.41
21125	655282.125	937684.638	2231.445	PK	497+00.00
21124	655278.838	937708.338	2231.633	PK	497+23.93
21123	655274.727	937734.083	2231.930	PK	497+50.00
21122	655263.903	937782.884	2232.657	PK	498+00.00
21121	655249.275	937830.683	2233.402	PK	498+50.00
20910	655230.932	937877.183	2234.150	PK	499+00.00
20909	655208.988	937922.096	2234.941	PK	499+50.00
20908	655183.579	937965.144	2235.862	PK	500+00.00
20907	655154.863	938006.059	2236.950	PK	500+50.00
20906	655128.568	938038.306	2237.989	PK	500+91.62
20905	655123.019	938044.590	2238.203	PK	501+00.00
20904	655088.285	938080.539	2239.553	PK	501+50.00
20903	655050.891	938113.712	2240.880	PK	502+00.00
20902	655011.058	938143.913	2242.316	PK	502+50.00
20901	654969.022	938170.964	2243.673	Spike	503+00.00
20900	654928.753	938192.863	2240.474	Tbar	503+45.85
20899	654925.042	938194.727	2240.243	Spike	503+50.00
20884	654881.181	938218.712	2238.731	Spike	504+00.00
20898	654838.956	938245.474	2236.763	Spike	504+50.00
20897	654798.544	938274.902	2240.805	Spike	505+00.00
20886	654760.113	938306.874	2251.371	Spike	505+50.00
20887	654723.823	938341.256	2259.755	Spike	506+00.00
20888	654689.824	938377.906	2260.580	Spike	506+50.00
20889	654658.258	938416.671	2257.382	Spike	507+00.00
20890	654629.256	938457.390	2256.360	Spike	507+50.00
20891	654602.939	938499.893	2257.903	Spike	508+00.00
20892	654579.416	938544.004	2258.716	Spike	508+50.00
20893	654558.785	938589.540	2259.197	Spike	509+00.00
20894	654541.132	938636.311	2260.055	Spike	509+50.00
20895	654526.530	938684.122	2260.782	Spike	510+00.00
20896	654515.040	938732.775	2257.835	Spike	510+50.00
20912	654507.965	938773.216	2257.168	Tbar	510+91.06
20913	654506.685	938782.064	2257.216	Spike	511+00.00
20914	654500.497	938831.677	2258.278	Spike	511+50.00
20915	654495.966	938881.469	2259.170	Spike	512+00.00
20916	654493.098	938931.385	2240.037	Spike	512+50.00
20917	654491.894	938981.368	2227.580	Spike	513+00.00
20919	654492.357	939031.363	2206.303	Spike	513+50.00
20920	654494.486	939081.316	2190.915	Spike	514+00.00
51450	654498.279	939131.169	-	-	514+50.00
51500	654503.730	939180.869	-	-	515+00.00
51550	654510.836	939230.359	-	-	515+50.00
51600	654519.586	939279.585	-	-	516+00.00
51650	654529.973	939328.492	2212.884	Spike	516+50.00
51700	654541.983	939377.026	2229.404	Spike	517+00.00
51750	654555.604	939425.132	2249.310	Spike	517+50.00
51800	654570.821	939472.758	2265.793	Spike	518+00.00
51850	654587.617	939519.850	2277.449	Spike	518+50.00
51900	654605.973	939566.356	2286.469	Spike	519+00.00
51950	654625.868	939612.225	2296.014	Spike	519+50.00
52000	654647.282	939657.405	2305.182	Spike	520+00.00
52050	654670.189	939701.846	2311.344	Spike	520+50.00
52100	654694.564	939745.500	2305.834	Spike	521+00.00
52129	654709.397	939770.492	2299.974	Tbar	521+29.00
52150	654720.189	939788.433	2294.893	Spike	521+50.00
52200	654745.418	939831.601	2282.439	Spike	522+00.00
52250	654769.872	939875.212	2269.146	Spike	522+50.00
20950	654793.543	939919.253	2254.476	Spike	523+00.00
20951	654816.424	939963.710	2241.778	Spike	523+50.00
20952	654838.508	940008.568	2232.066	Spike	524+00.00
20953	654859.787	940053.813	2229.471	Spike	524+50.00
20956	654880.254	940099.431	2231.599	Spike	525+00.00
20957	654899.904	940145.407	2233.248	Spike	525+50.00
20958	654918.730	940191.727	2233.943	Spike	526+00.00
20921	654936.726	940238.376	2233.378	Spike	526+50.00
20922	654953.886	940285.338	2232.012	Spike	527+00.00
20923	654970.204	940332.600	2229.477	Spike	527+50.00
20924	654985.676	940380.145	2226.242	PK	528+00.00
20925	655000.297	940427.959	2222.462	PK	528+50.00
20926	655014.061	940476.026	2218.712	PK	529+00.00
20927	655026.965	940524.332	2214.888	PK	529+50.00
20928	655033.481	940550.132	2212.898	PK	529+76.61
20929	655039.100	940572.837	2211.223	PK	530+00.00
20930	655045.637	940599.252	2209.302	PK	530+27.21
20931	655051.226	940621.344	2207.643	PK	530+50.00
20932	655064.290	940669.606	2203.975	PK	531+00.00
20933	655078.449	940717.558	2200.436	PK	531+50.00
20934	655093.694	940765.176	2196.865	PK	532+00.00
20935	655094.903	940768.796	2196.588	PK	532+03.82
20936	655110.817	940812.144	2193.114	PK	532+50.00
20937	655130.837	940857.952	2189.295	PK	533+00.00
20938	655153.680	940902.420	2185.666	PK	533+50.00
20939	655176.644	940941.250	2182.504	PK	533+95.12

U.S. DEPARTMENT OF TRANSPORTATION
FEDERAL HIGHWAY ADMINISTRATION
EASTERN FEDERAL LANDS HIGHWAY DIVISION
STERLING, VIRGINIA

BLUE RIDGE PARKWAY

SURVEY INFORMATION SHEET

16-Dec-2018 11:40 AM M:\PROJECTS_STATE_DOT\NC\blri_i26_nepa\Proj_Dev\CADD\From_Eng_Support\As_Requested_3_2017\A04-BLRI_I_26_NEPA_sis.dgn

STATE	PROJECT	SHEET NUMBER
NC	BLRI OVER I-26	A05

Describe Chain BLRI_PW

Chain BLRI_PW contains:
C17 CUR BLRI_PW-1 CUR BLRI_PW-2 CUR BLRI_PW-3 Z1 CUR BLRI_PW-4
CUR BLRI_PW-5 CUR BLRI_PW-6 CUR BLRI_PW-7

Beginning chain BLRI_PW description
==========

Point C17 N 655,285.3657 E 937,661.2762 Sta 496+76.41

Course from C17 to PC BLRI_PW-1 S 82° 06' 11.86" E Dist 47.5124

Curve Data

Curve BLRI_PW-1
P.I. Station 499+13.09 N 655,252.8499 E 937,895.7040
Delta = 33° 10' 35.25" (RT)
Degree = 9° 01' 22.65"
Tangent = 189.1597
Length = 367.6894
Radius = 635.0000
External = 27.5756
Long Chord = 362.5742
Mid. Ord. = 26.4279
P.C. Station 497+23.93 N 655,278.8381 E 937,708.3380
P.T. Station 500+91.62 N 655,128.5678 E 938,038.3060
C.C. N 654,649.8596 E 937,621.0969
Back = S 82° 06' 11.86" E
Ahead = S 48° 55' 36.60" E
Chord Bear = S 65° 30' 54.23" E

Curve Data

Curve BLRI_PW-2
P.I. Station 502+20.38 N 655,043.9686 E 938,135.3756
Delta = 22° 24' 35.39" (RT)
Degree = 8° 48' 53.05"
Tangent = 128.7614
Length = 254.2315
Radius = 650.0000
External = 12.6307
Long Chord = 252.6141
Mid. Ord. = 12.3900
P.C. Station 500+91.62 N 655,128.5678 E 938,038.3060
P.T. Station 503+45.85 N 654,928.7527 E 938,192.8628
C.C. N 654,638.5515 E 937,611.2416
Back = S 48° 55' 36.60" E
Ahead = S 26° 31' 01.21" E
Chord Bear = S 37° 43' 18.91" E

Curve Data

Curve BLRI_PW-3
P.I. Station 507+50.07 N 654,567.0523 E 938,373.3340
Delta = 55° 04' 39.65" (LT)
Degree = 7° 23' 27.14"
Tangent = 404.2239
Length = 745.2121
Radius = 775.2234
External = 99.0582
Long Chord = 716.8488
Mid. Ord. = 87.8347
P.C. Station 503+45.85 N 654,928.7527 E 938,192.8628
P.T. Station 510+91.06 N 654,507.9650 E 938,773.2161
C.C. N 655,274.8615 E 938,886.5342
Back = S 26° 31' 01.21" E
Ahead = S 81° 35' 40.86" E
Chord Bear = S 54° 03' 21.04" E

Point Z1 N 654,507.9650 E 938,773.2161 Sta 510+91.06

Curve Data

Curve BLRI_PW-4
P.I. Station 516+31.81 N 654,428.9202 E 939,308.1626
Delta = 39° 38' 55.67" (LT)
Degree = 3° 49' 10.99"
Tangent = 540.7549
Length = 1,038.0031
Radius = 1,500.0000
External = 94.4955
Long Chord = 1,017.4156
Mid. Ord. = 88.8953
P.C. Station 510+91.06 N 654,507.9650 E 938,773.2161
P.T. Station 521+29.06 N 654,709.3968 E 939,770.4923
C.C. N 655,991.8531 E 938,992.4783
Back = S 81° 35' 40.86" E
Ahead = N 58° 45' 23.47" E
Chord Bear = N 78° 34' 51.30" E

Curve Data

Curve BLRI_PW-5
P.I. Station 525+56.10 N 654,930.8919 E 940,135.5986
Delta = 17° 20' 35.45" (RT)
Degree = 2° 02' 46.60"
Tangent = 427.0395
Length = 847.5477
Radius = 2,800.0000
External = 32.3776
Long Chord = 844.3158
Mid. Ord. = 32.0075
P.C. Station 521+29.06 N 654,709.3968 E 939,770.4923
P.T. Station 529+76.61 N 655,033.4809 E 940,550.1323
C.C. N 652,315.4783 E 941,222.7850
Back = N 58° 45' 23.47" E
Ahead = N 76° 05' 58.92" E
Chord Bear = N 67° 25' 41.20" E

Course from PT BLRI_PW-5 to PC BLRI_PW-6 N 76° 05' 58.92" E Dist 50.6014

Curve Data

Curve BLRI_PW-6
P.I. Station 531+15.56 N 655,066.8617 E 940,685.0145
Delta = 4° 36' 16.97" (LT)
Degree = 2° 36' 26.47"
Tangent = 88.3500
Length = 176.6049
Radius = 2,197.4689
External = 1.7754
Long Chord = 176.5573
Mid. Ord. = 1.7739
P.C. Station 530+27.21 N 655,045.6371 E 940,599.2519
P.T. Station 532+03.82 N 655,094.9028 E 940,768.7965
C.C. N 657,178.7536 E 940,071.3471
Back = N 76° 05' 58.92" E
Ahead = N 71° 29' 41.96" E
Chord Bear = N 73° 47' 50.44" E

Curve Data

Curve BLRI_PW-7
P.I. Station 532+99.93 N 655,125.4068 E 940,859.9367
Delta = 13° 42' 38.33" (LT)
Degree = 7° 10' 01.42"
Tangent = 96.1095
Length = 191.3009
Radius = 799.4321
External = 5.7565
Long Chord = 190.8447
Mid. Ord. = 5.7154
P.C. Station 532+03.82 N 655,094.9028 E 940,768.7965
P.T. Station 533+95.12 N 655,176.6435 E 940,941.2499
C.C. N 655,853.0011 E 940,515.0666
Back = N 71° 29' 41.96" E
Ahead = N 57° 47' 03.63" E
Chord Bear = N 64° 38' 22.79" E

==========
Ending chain BLRI_PW description

U.S. DEPARTMENT OF TRANSPORTATION
FEDERAL HIGHWAY ADMINISTRATION
EASTERN FEDERAL LANDS HIGHWAY DIVISION
STERLING, VIRGINIA

BLUE RIDGE PARKWAY

ALIGNMENT DESCRIPTION

16-Dec-2018 11:42 AM M:\PROJECTS_STATE_DOT\NC\blri_I26_nepa\Proj_Dev\CADD\From_Eng_Support\As_Requested_3_20\A05-A06-BLRI_I_26_NEPA_ChainDesc.dgn

STATE	PROJECT	SHEET NUMBER
NC	BLRI OVER I-26	A06

Describe Chain BLRI_TRAIL_1

Chain BLRI_TRAIL_1 contains:
175 CUR BLRI_TRAIL_1-1 176

Beginning chain BLRI_TRAIL_1 description
==========

Point 175 N 654,816.424 E 939,963.710 Sta 600+00.00

Course from 175 to PC BLRI_TRAIL_1-1 S 56° 04' 23.71" E Dist 47.058

Curve Data

Curve BLRI_TRAIL_1-1
P.I. Station 601+19.52 N 654,749.714 E 940,062.885
Delta = 27° 09' 35.62" (RT)
Degree = 19° 05' 54.94"
Tangent = 72.467
Length = 142.209
Radius = 300.000
External = 8.628
Long Chord = 140.881
Mid. Ord. = 8.387
P.C. Station 600+47.06 N 654,790.160 E 940,002.756
P.T. Station 601+89.27 N 654,686.280 E 940,097.922
C.C. N 654,541.234 E 939,835.316
Back = S 56° 04' 23.71" E
Ahead = S 28° 54' 48.09" E
Chord Bear = S 42° 29' 35.90" E

Course from PT BLRI_TRAIL_1-1 to 176 S 28° 54' 48.09" E Dist 69.474

Point 176 N 654,625.466 E 940,131.512 Sta 602+58.74

==========
Ending chain BLRI_TRAIL_1 description

Describe Chain BLRI_TRAIL_2

Chain BLRI_TRAIL_2 contains:
177 178

Beginning chain BLRI_TRAIL_2 description
==========

Point 177 N 654,578.497 E 938,650.392 Sta 700+00.00

Course from 177 to 178 S 60° 05' 23.97" E Dist 141.363

Point 178 N 654,508.008 E 938,772.928 Sta 701+41.36

==========
Ending chain BLRI_TRAIL_2 description

Describe Chain BLRI TRAIL 3

Chain BLRI TRAIL 3 contains:
240 CUR BLRI TRAIL 3-1 CUR BLRI TRAIL 3-2 241
Beginning chain BLRI TRAIL 3 description
==========

Point 240 N 654,672.2405 E 939,705.6561 Sta 800+00.00

Course from 240 to PC BLRI TRAIL 3-1 N 28° 23' 19.58" W Dist 38.1624

Curve Data

Curve BLRI TRAIL 3-1
P.I. Station 800+53.05 N 654,718.9147 E 939,680.4313
Delta = 89° 35' 09.38" (RT)
Degree = 381° 58' 18.71"
Tangent = 14.8920
Length = 23.4535
Radius = 15.0000
External = 6.1370
Long Chord = 21.1364
Mid. Ord. = 4.3551
P.C. Station 800+38.16 N 654,705.8136 E 939,687.5117
P.T. Station 800+61.62 N 654,726.0896 E 939,693.4808
C.C. N 654,712.9454 E 939,700.7078
Back = N 28° 23' 19.58" W
Ahead = N 61° 11' 49.80" E
Chord Bear = N 16° 24' 15.11" E

Course from PT BLRI TRAIL 3-1 to PC BLRI TRAIL 3-2 N 61° 11' 49.80" E Dist 265.6346

Curve Data

Curve BLRI TRAIL 3-2
P.I. Station 803+37.99 N 654,859.2474 E 939,935.6656
Delta = 71° 13' 08.82" (RT)
Degree = 381° 58' 18.71"
Tangent = 10.7427
Length = 18.6451
Radius = 15.0000
External = 3.4501
Long Chord = 17.4678
Mid. Ord. = 2.8049
P.C. Station 803+27.25 N 654,854.0716 E 939,926.2519
P.T. Station 803+45.90 N 654,852.0013 E 939,943.5966
C.C. N 654,840.9274 E 939,933.4789
Back = N 61° 11' 49.80" E
Ahead = S 47° 35' 01.39" E
Chord Bear = S 83° 11' 35.80" E

Course from PT BLRI TRAIL 3-2 to 241 S 47° 35' 01.39" E Dist 9.6287

Point 241 N 654,845.5066 E 939,950.7051 Sta 803+55.52

==========
Ending chain BLRI TRAIL 3 description

U.S. DEPARTMENT OF TRANSPORTATION
FEDERAL HIGHWAY ADMINISTRATION
EASTERN FEDERAL LANDS HIGHWAY DIVISION
STERLING, VIRGINIA

BLUE RIDGE PARKWAY

ALIGNMENT DESCRIPTION

16-Dec-2018 11:43 AM M:\PROJECTS_STATE_DOT\NC\blri_I-26_nepa\Proj_Dev\CADD\From_Eng_Support\As_Requested_3_20\A05-A06-BLRI_I_26_NEPA_ChainDesc.dgn

STATE	PROJECT	SHEET NUMBER
NC	BLRI OVER I-26	A07

NEW CURVE DATA:

① Curve = BLRI_PW-1
PI 499+13.09
Δ= 33° 10' 35" (RT)
R = 635.00'
T = 189.16'
L = 367.69'

② Curve = BLRI_PW-2
PI 502+20.38
Δ= 22° 24' 35" (RT)
R = 650.00'
T = 128.76'
L = 254.23'

③ Curve = BLRI_PW-3
PI 507+50.07
Δ= 55° 04' 40" (LT)
R = 775.22'
T = 404.22'
L = 745.21'

④ Curve = BLRI_PW-4
PI 516+31.81
Δ= 39° 38' 56" (LT)
R = 1,500.00'
T = 540.75'
L = 1,038.00'

⑤ Curve = BLRI_PW-5
PI 525+56.10
Δ= 17° 20' 35" (RT)
R = 2,800.00'
T = 427.04'
L = 847.55'

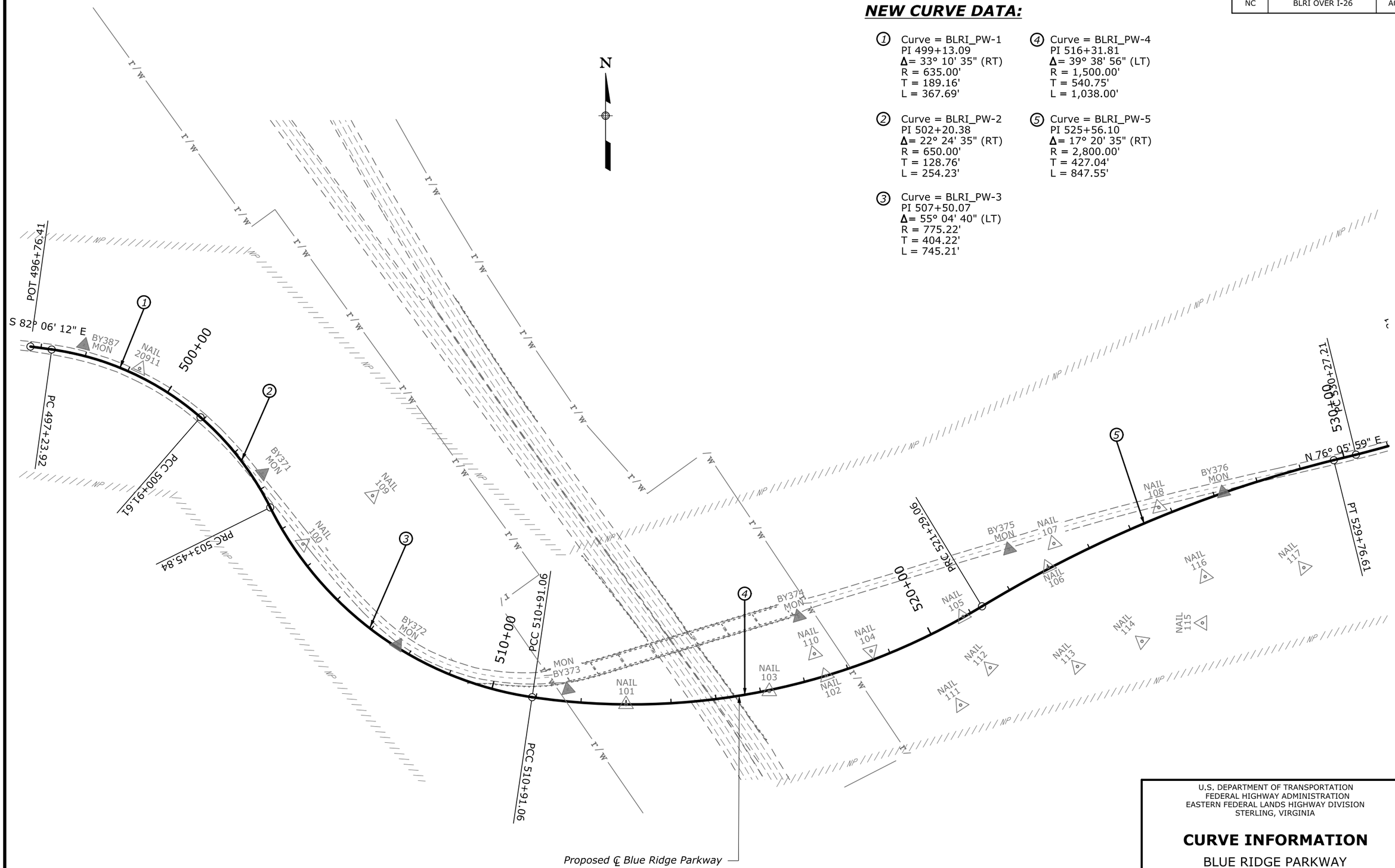

U.S. DEPARTMENT OF TRANSPORTATION
FEDERAL HIGHWAY ADMINISTRATION
EASTERN FEDERAL LANDS HIGHWAY DIVISION
STERLING, VIRGINIA

CURVE INFORMATION

BLUE RIDGE PARKWAY

0 100 200
SCALE IN FEET

16-Dec-2018 11:48 AM M:\PROJECTS_STATE_DOT\NC\blri_i26_nepa\Proj_Dev\CADD\From_Eng_Support\As_Requested_3_2017\A07-BLRI_I_26_NEPA_CurveInf.dgn

STATE	PROJECT	SHEET NUMBER
NC	BLRI OVER I-26	B01

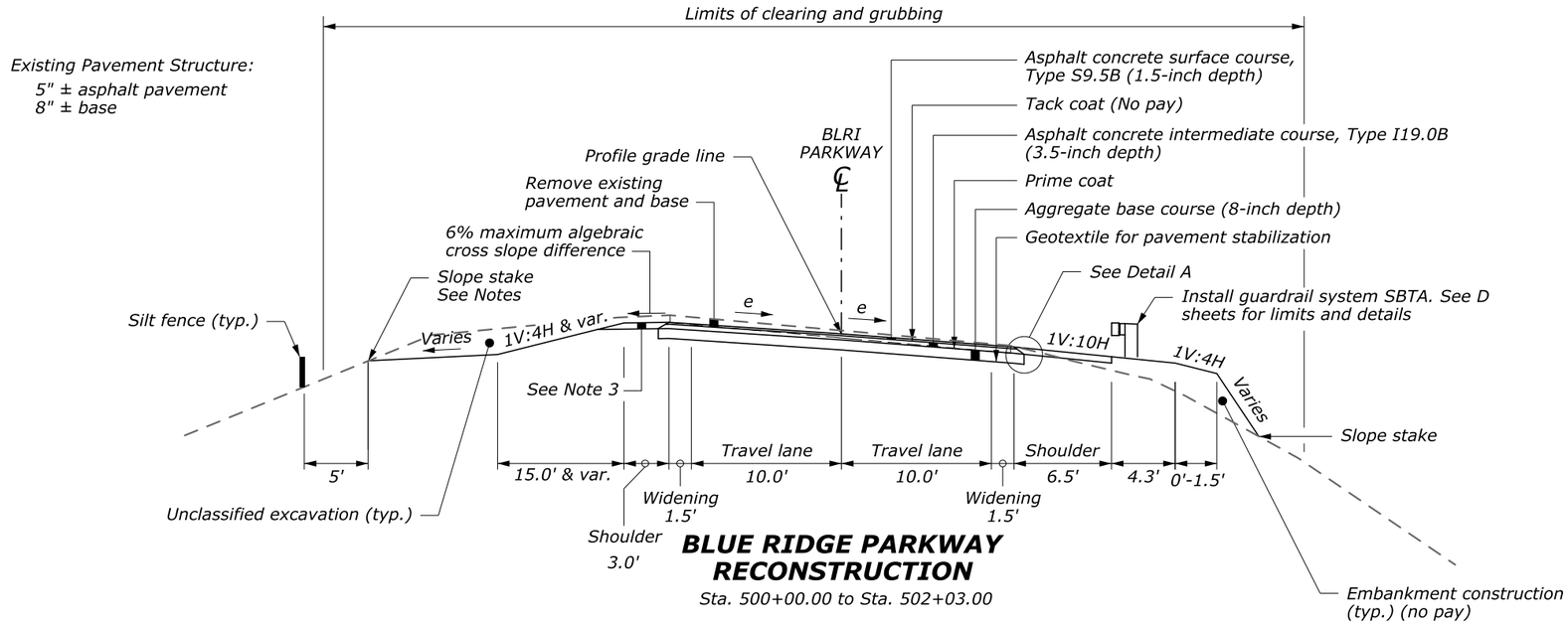

BLUE RIDGE PARKWAY RECONSTRUCTION

Sta. 500+00.00 to Sta. 502+03.00

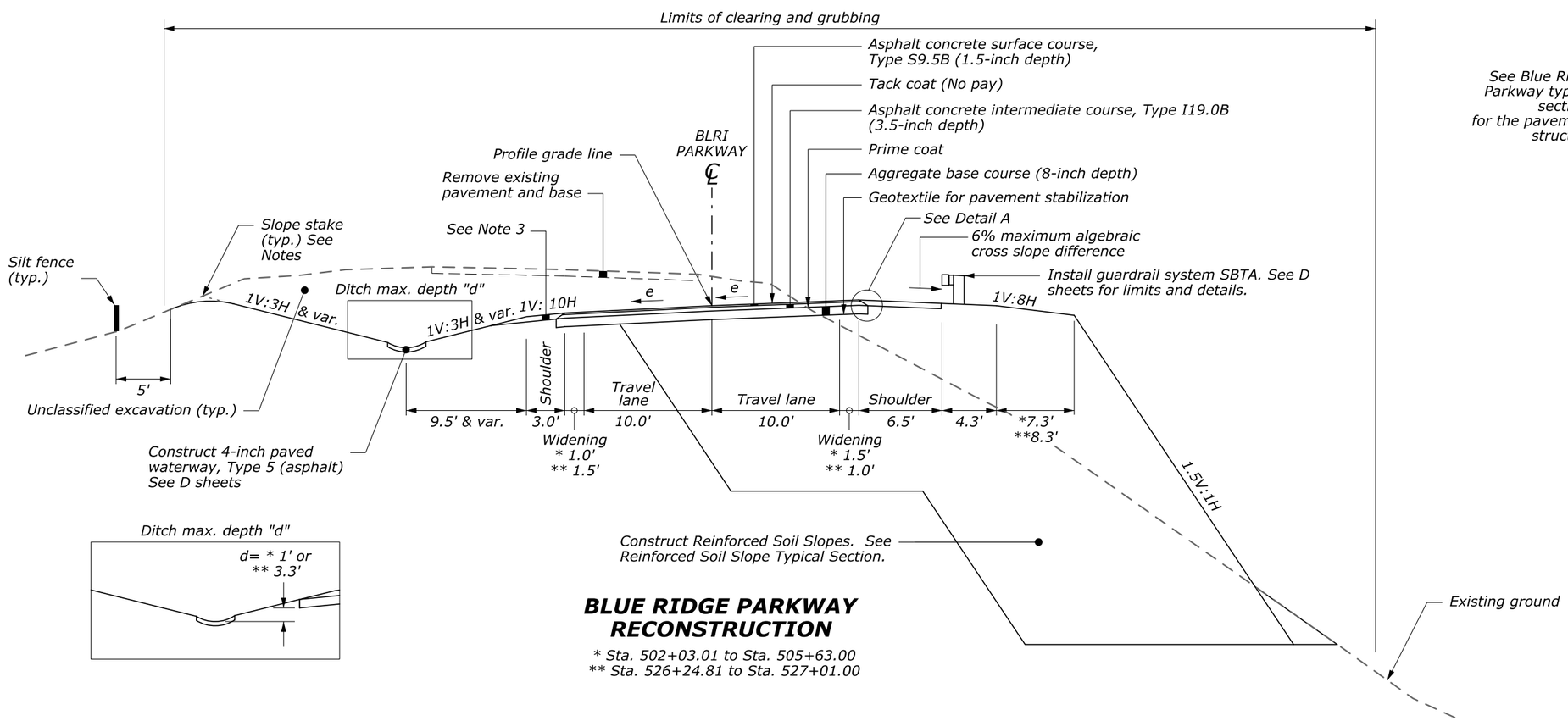

BLUE RIDGE PARKWAY RECONSTRUCTION

* Sta. 502+03.01 to Sta. 505+63.00
** Sta. 526+24.81 to Sta. 527+01.00

NOTES:

1. Prepare the surface on which the aggregate course is placed according to Articles 225 and 500 of the NCDOT 2018 Standard Specifications.
2. Provide topsoil 6-inch depth and establish turf on all disturbed areas, except aggregate surface areas in accordance with Articles 1060 and 1660 of the NCDOT 2018 Standard Specifications.
3. Place aggregate-topsoil course, 4½-inch on both shoulders.
4. See Slope Rounding of Parkway Setion in the plans for slope stake lengths.

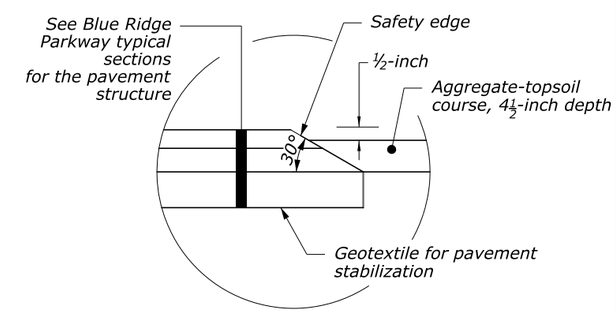

DETAIL A

Typ. both sides

No scale

U.S. DEPARTMENT OF TRANSPORTATION
FEDERAL HIGHWAY ADMINISTRATION
EASTERN FEDERAL LANDS HIGHWAY DIVISION
STERLING, VIRGINIA

BLUE RIDGE PARKWAY

TYPICAL SECTIONS

BLUE RIDGE PARKWAY

18-Dec-2018 04:15 PM M:\PROJECTS_STATE_DOT\NC\blri_i26_nepa\Proj_Dev\CADD\From_Eng_Support\As_Requested_3_2017\B01-B04_B07-BLRI_I_26_NEPA_typ.dgn

STATE	PROJECT	SHEET NUMBER
NC	BLRI OVER I-26	B02

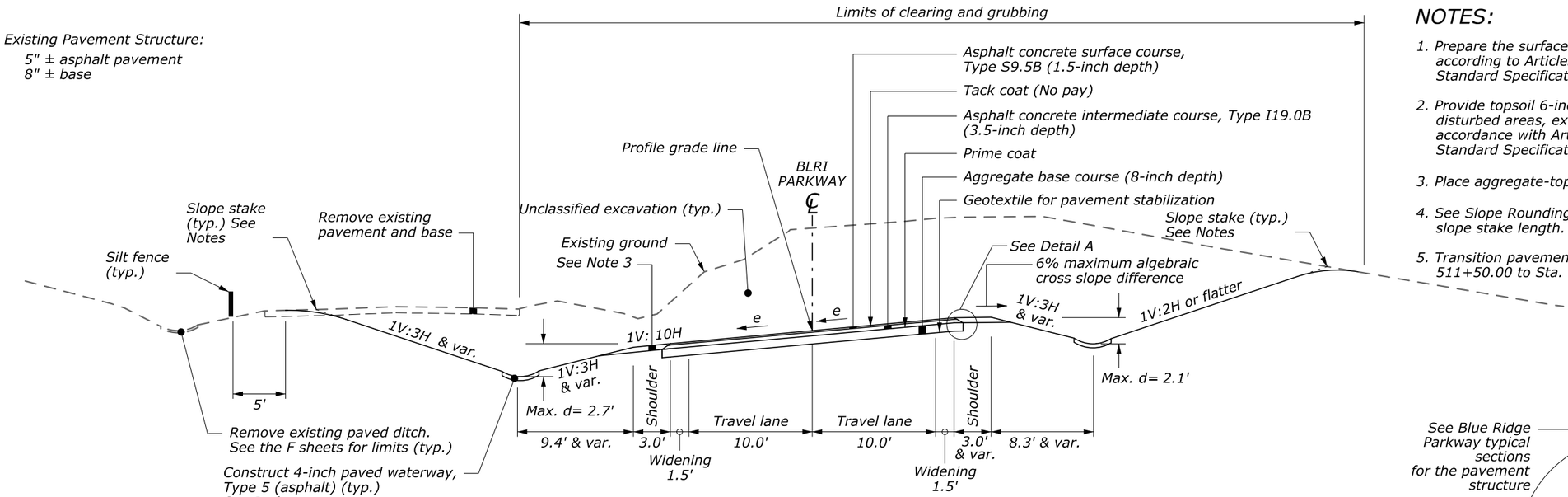

BLUE RIDGE PARKWAY RECONSTRUCTION

Sta. 505+63.01 to Sta. 510+40.39

NOTES:

1. Prepare the surface on which the aggregate course is placed according to Articles 225 and 500 of the NCDOT 2018 Standard Specifications.
2. Provide topsoil 6-inch depth and establish turf on all disturbed areas, except aggreagate surface areas in accordance with Articles 1060 and 1660 of the NCDOT 2018 Standard Specifications.
3. Place aggregate-topsoil course, 4½-inch on both shoulders.
4. See Slope Rounding of Parkway Sections in the plans for slope stake length.
5. Transition pavement safety edge to vertical from Sta. 511+50.00 to Sta. 511+68.09.

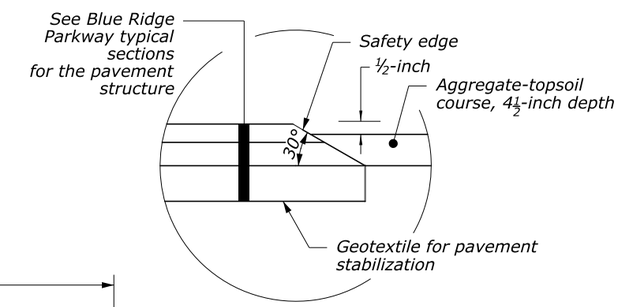

DETAIL A

Typ. both sides

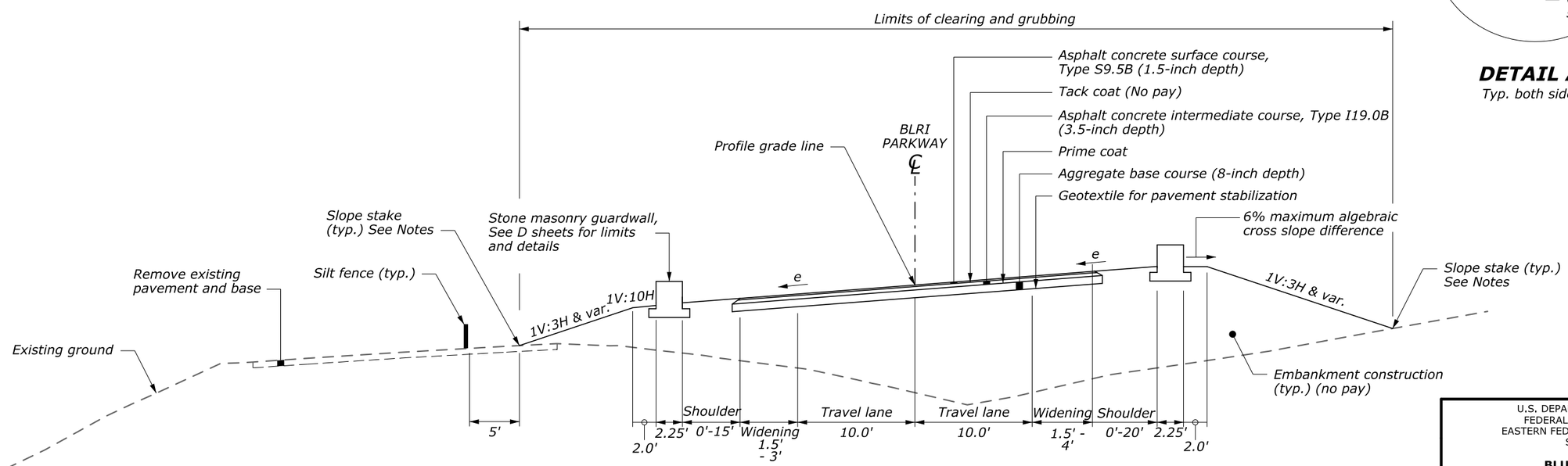

BLUE RIDGE PARKWAY RECONSTRUCTION

Sta. 510+40.40 to Sta. 511+68.09

No scale

U.S. DEPARTMENT OF TRANSPORTATION
FEDERAL HIGHWAY ADMINISTRATION
EASTERN FEDERAL LANDS HIGHWAY DIVISION
STERLING, VIRGINIA

BLUE RIDGE PARKWAY

TYPICAL SECTIONS

BLUE RIDGE PARKWAY

18-Dec-2018 04:15 PM M:\PROJECTS_STATE_DOT\NC\blri_I26_nepa\Proj_Dev\CADD\From_Eng_Support\As_Requested_3_2017\B01-B04_B07-BLRI_I_26_NEPA_typ.dgn

STATE	PROJECT	SHEET NUMBER
NC	BLRI OVER I-26	B03

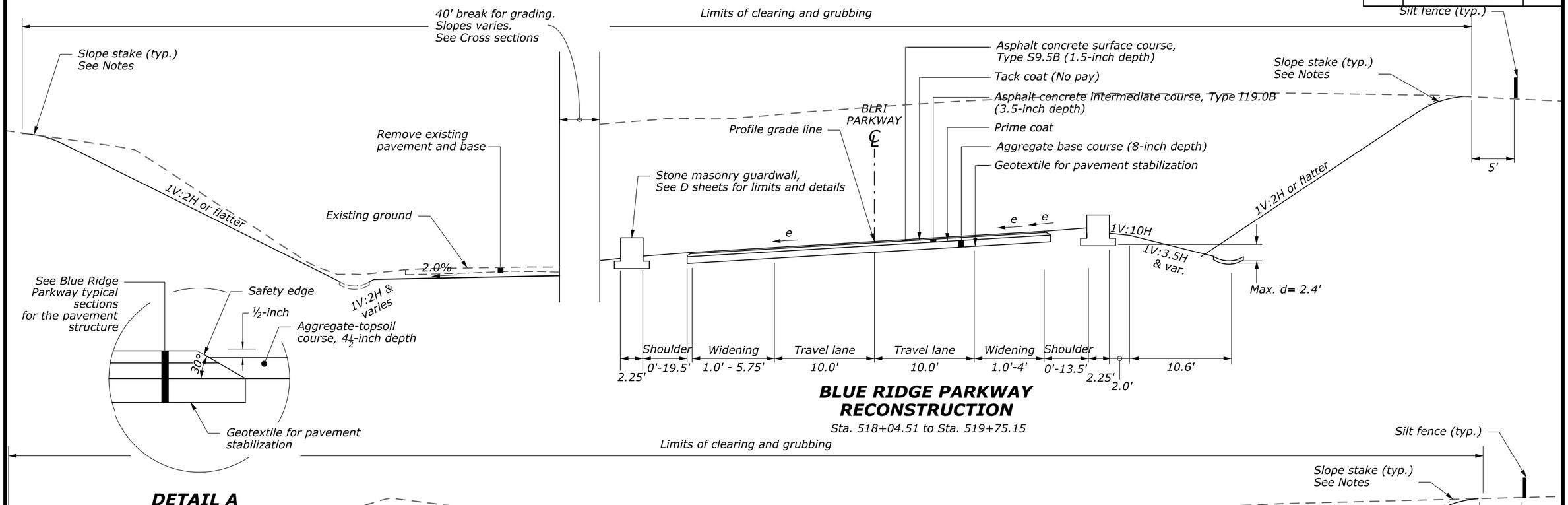

BLUE RIDGE PARKWAY RECONSTRUCTION

Sta. 518+04.51 to Sta. 519+75.15

DETAIL A

Typ. both sides

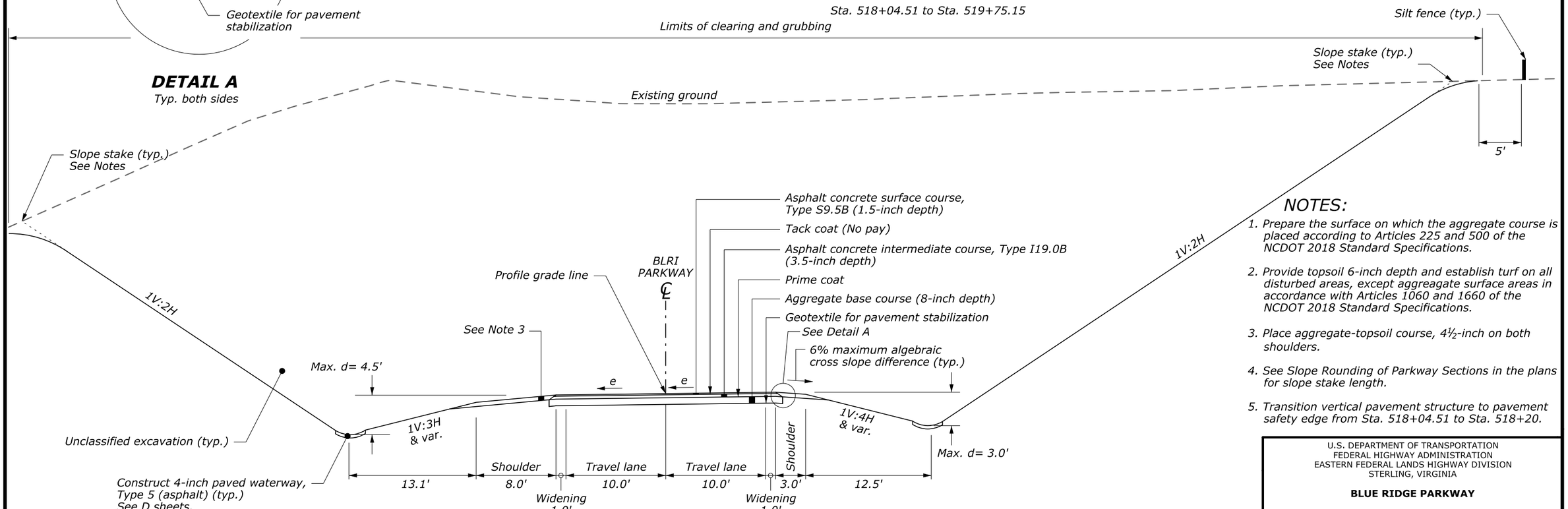

BLUE RIDGE PARKWAY RECONSTRUCTION

Sta. 519+75.15 to Sta. 520+54.23

NOTES:

1. Prepare the surface on which the aggregate course is placed according to Articles 225 and 500 of the NCDOT 2018 Standard Specifications.
2. Provide topsoil 6-inch depth and establish turf on all disturbed areas, except aggreagate surface areas in accordance with Articles 1060 and 1660 of the NCDOT 2018 Standard Specifications.
3. Place aggregate-topsoil course, 4½-inch on both shoulders.
4. See Slope Rounding of Parkway Sections in the plans for slope stake length.
5. Transition vertical pavement structure to pavement safety edge from Sta. 518+04.51 to Sta. 518+20.

U.S. DEPARTMENT OF TRANSPORTATION
FEDERAL HIGHWAY ADMINISTRATION
EASTERN FEDERAL LANDS HIGHWAY DIVISION
STERLING, VIRGINIA

BLUE RIDGE PARKWAY

TYPICAL SECTIONS

BLUE RIDGE PARKWAY

No scale

Sheet 3 of 7

M:\PROJECTS_STATE_DOT\NC\blri_i26_nepa\Proj_Dev\CADD\From_Eng_Support\As_Requested_3_2017\B01-B04_B07-BLRI_I_26_NEPA_typ.dgn
18-Dec-2018 04:16 PM

STATE	PROJECT	SHEET NUMBER
NC	BLRI OVER I-26	B04

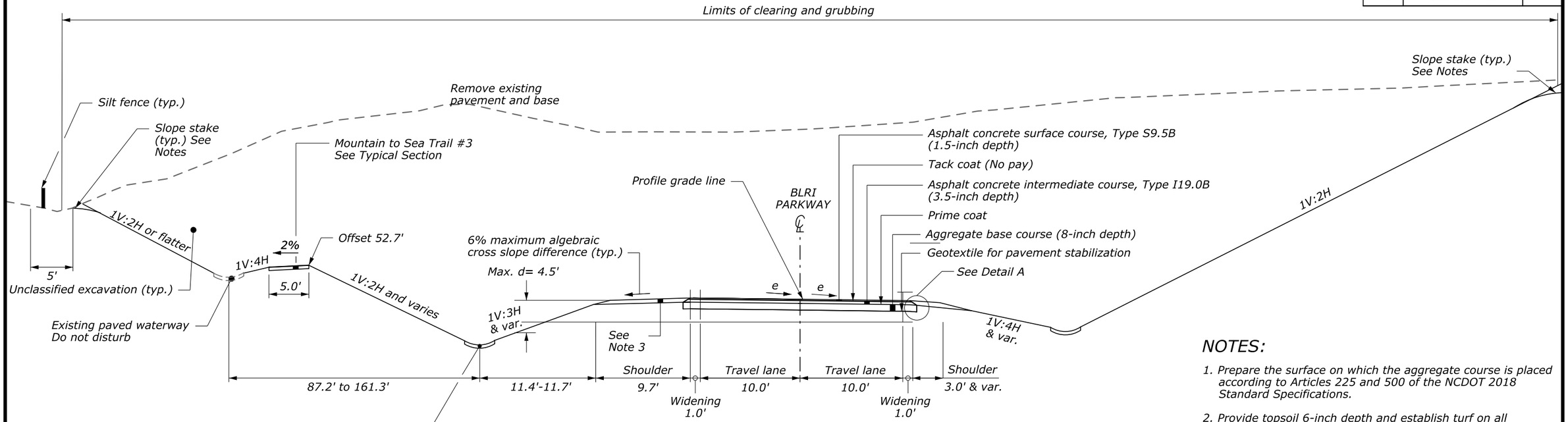

BLUE RIDGE PARKWAY RECONSTRUCTION

Sta. 520+54.32 to Sta. 522+89.40

NOTES:

1. Prepare the surface on which the aggregate course is placed according to Articles 225 and 500 of the NCDOT 2018 Standard Specifications.
2. Provide topsoil 6-inch depth and establish turf on all disturbed areas, except aggreagate surface areas in accordance with Articles 1060 and 1660 of the NCDOT 2018 Standard Specifications.
3. Place aggregate-topsoil course, 4½-inch on both shoulders.
4. See Slope Rounding of Parkway Sections in the plans for slope stake length.

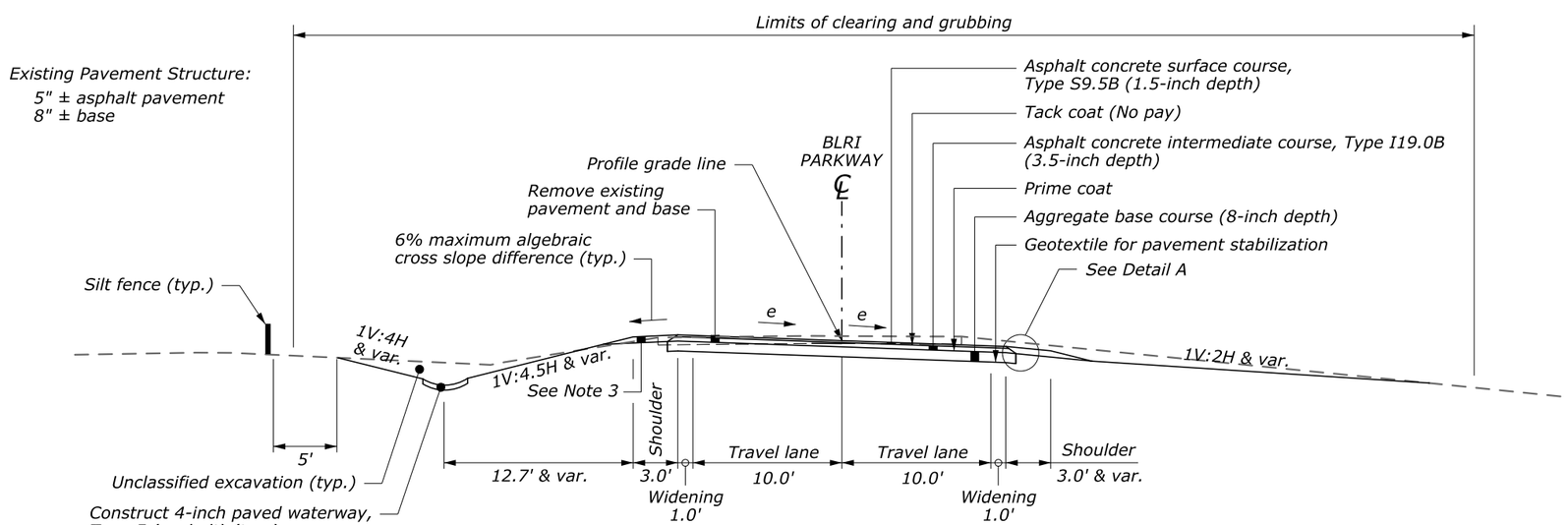

BLUE RIDGE PARKWAY RECONSTRUCTION

Sta. 527+01.00 to Sta. 530+50.00

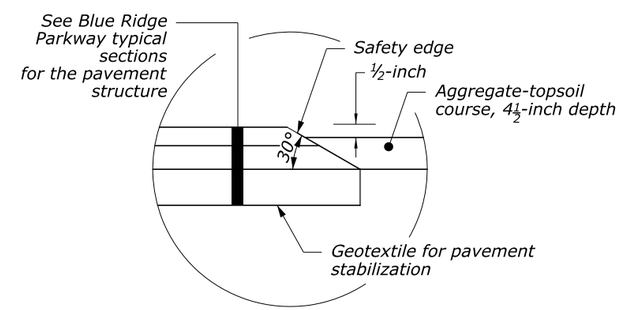

DETAIL A

Typ. both sides

No scale

U.S. DEPARTMENT OF TRANSPORTATION
FEDERAL HIGHWAY ADMINISTRATION
EASTERN FEDERAL LANDS HIGHWAY DIVISION
STERLING, VIRGINIA

BLUE RIDGE PARKWAY

TYPICAL SECTIONS

BLUE RIDGE PARKWAY

18-Dec-2018 04:46 PM M:\PROJECTS_STATE_DOT\NC\blri_I26_nepa\Proj_Dev\CADD\From_Eng_Support\As_Requested_3_2017\B01-B04_B07-BLRI_I_26_NEPA_typ.dgn

STATE	PROJECT	SHEET NUMBER
NC	BLRI OVER I-26	B05

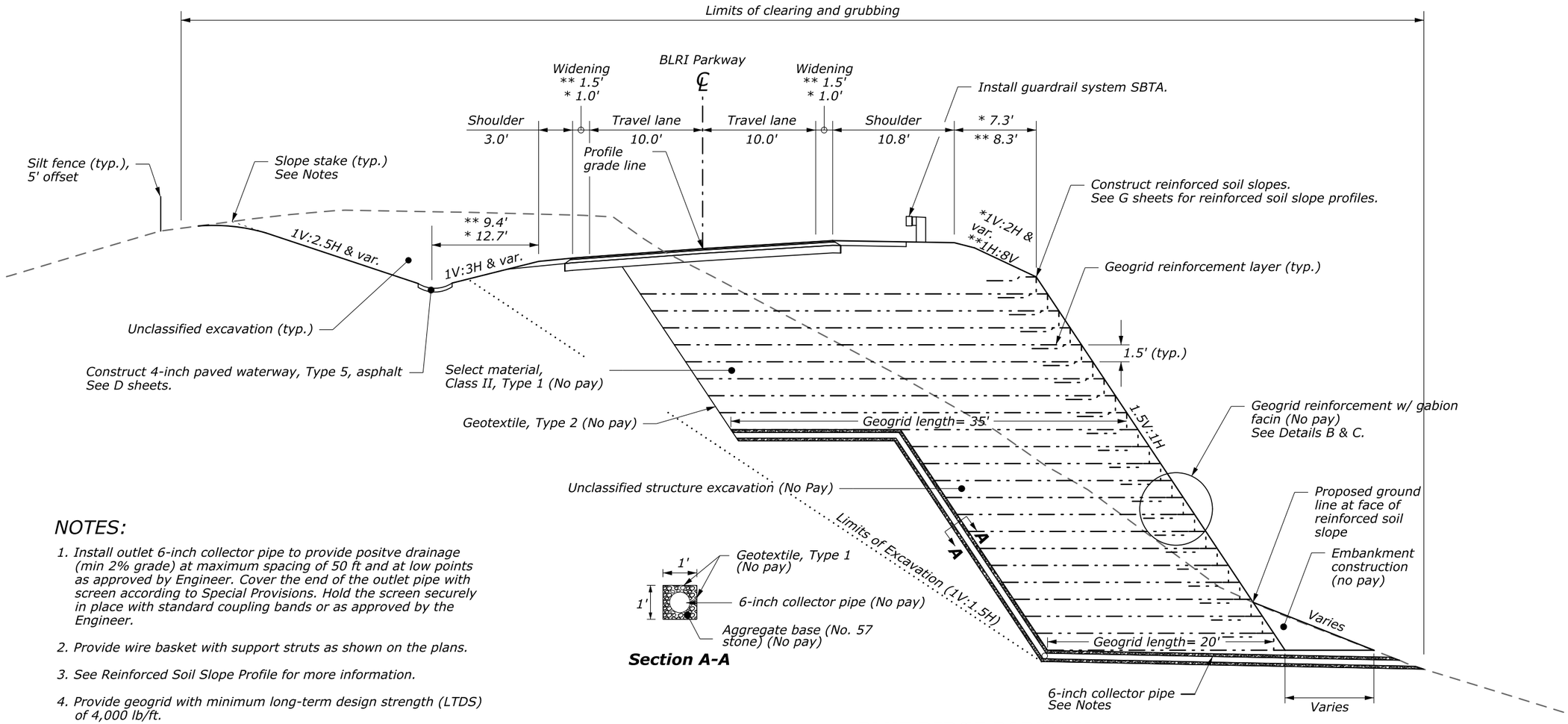

Section A-A

NOTES:

1. Install outlet 6-inch collector pipe to provide positve drainage (min 2% grade) at maximum spacing of 50 ft and at low points as approved by Engineer. Cover the end of the outlet pipe with screen according to Special Provisions. Hold the screen securely in place with standard coupling bands or as approved by the Engineer.
2. Provide wire basket with support struts as shown on the plans.
3. See Reinforced Soil Slope Profile for more information.
4. Provide geogrid with minimum long-term design strength (LTDS) of 4,000 lb/ft.
5. Bench the back slope to accommodate reinforcement length required.
6. Sta. 522+89.40 to Sta. 526+24.80, construct parking area on left. See Parking Area Typical Section for more detail.
7. See Slope Rounding of Parkway Sections in plans for slope stake length.

BLUE RIDGE PARKWAY REINFORCED SOIL SLOPES

* Sta. 502+03 to Sta. 505+63 RT
** Sta. 526+24.80 to Sta. 527+01 RT (See Notes)

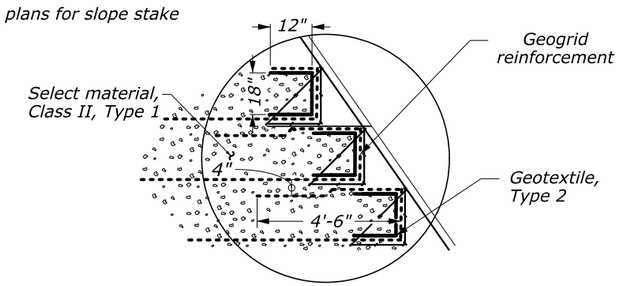

Detail B

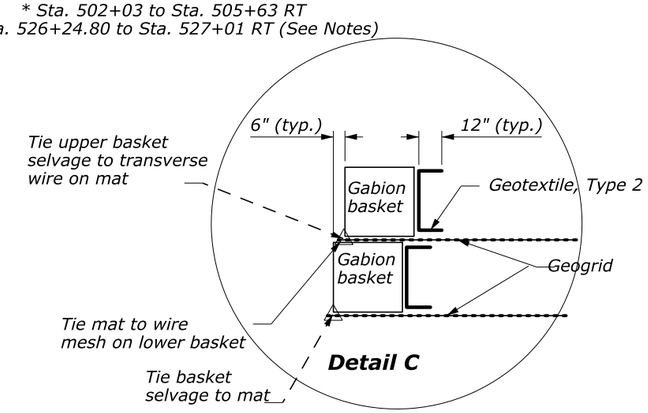

Detail C

No scale

U.S. DEPARTMENT OF TRANSPORTATION
FEDERAL HIGHWAY ADMINISTRATION
EASTERN FEDERAL LANDS HIGHWAY DIVISION
STERLING, VIRGINIA

BLUE RIDGE PARKWAY

TYPICAL SECTION

REINFORCED SOIL SLOPE

13-Dec-2018 05:11 AM M:\PROJECTS_STATE_DOT\NC\blri_i26_nepa\Proj_Dev\CADD\From_Eng_Support\As_Requested_3_20\7\B05-BLRI_I_26_NEPA_typdgn

STATE	PROJECT	SHEET NUMBER
NC	BLRI OVER I-26	B06

NOTES:

1. Prepare the surface on which the aggregate course is placed according to Article 225 of the NCDOT 2018 Standard Specifications.
2. Provide topsoil 6-inch depth and establish turf on all disturbed areas, except aggreagate surface areas in accordance with Articles 1060 and 1660 of the NCDOT 2018 Standard Specifications.
3. Place aggregate-topsoil course, 4½-inch on both shoulders.
4. See Slope Rounding of Parkway Sections in the plans for slope stake length.

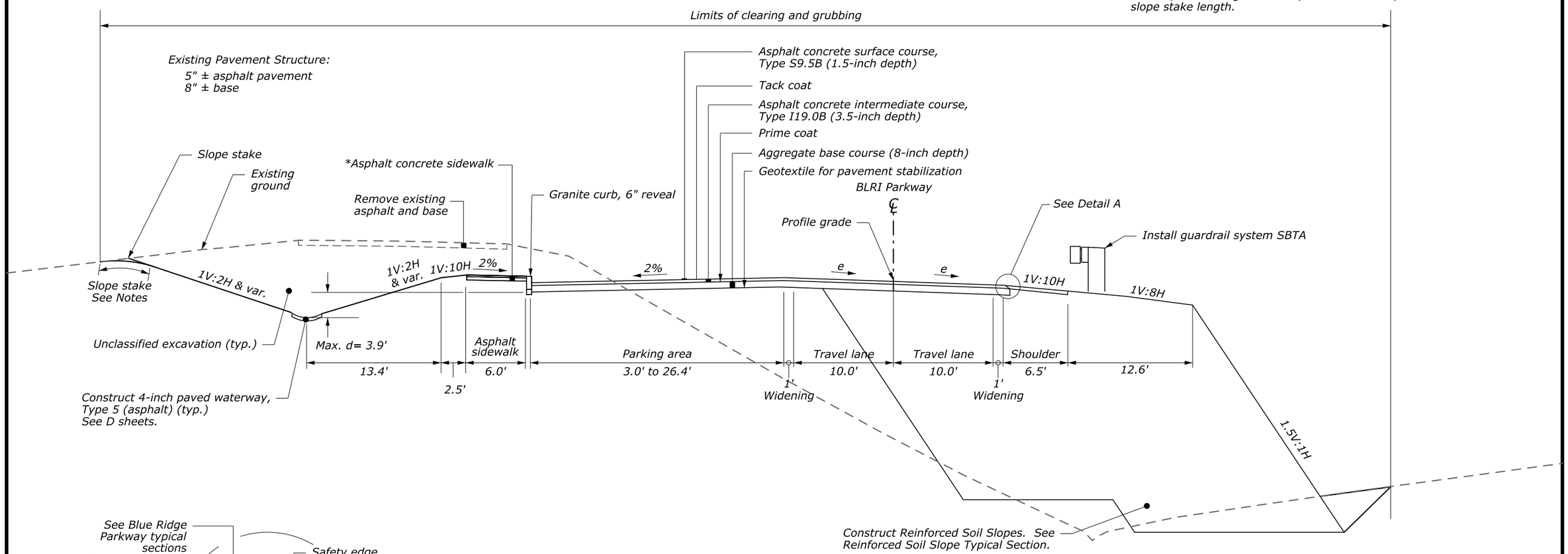

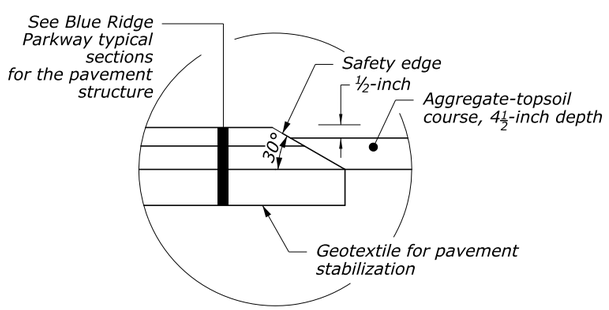

DETAIL A

Typ. both sides

BLUE RIDGE PARKWAY PARKING AREA

Sta. 522+89.40 to Sta. 526+24.80

*Sta. 523+64.70 to Sta. 525+42.50

U.S. DEPARTMENT OF TRANSPORTATION
FEDERAL HIGHWAY ADMINISTRATION
EASTERN FEDERAL LANDS HIGHWAY DIVISION
STERLING, VIRGINIA

BLUE RIDGE PARKWAY

TYPICAL SECTION

PARKING AREA

18-Dec-2018 04:07 PM M:\PROJECTS_STATE_DOT\NC\blri_I26_repo\Proj_Dev\CAD\Dfrom_Eng_Support\As_Requested_3_2017\B06-BLRI_I_26_NEPA_typ_parking.dgn

STATE	PROJECT	SHEET NUMBER
NC	BLRI OVER I-26	B07

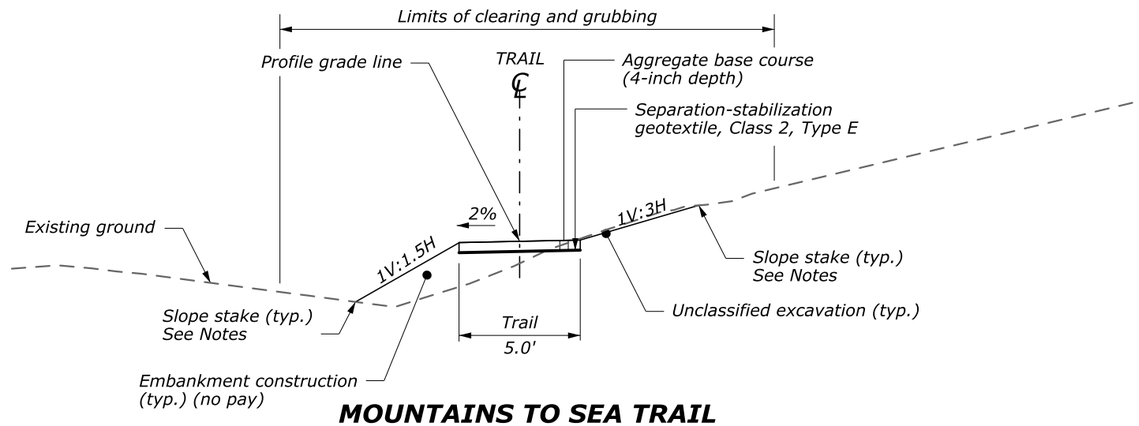

MOUNTAINS TO SEA TRAIL RECONSTRUCTION

Sta. 600+25.84 to Sta. 602+52.04
Sta. 700+06.00 to Sta. 700+58.19
Sta. 800+21.51 to Sta. 803+55.52

NOTES:

1. Prepare the surface on which the aggregate course is placed according to Articles 225 and 500 of the NCDOT 2018 Standard Specifications.
2. Provide topsoil 6-inch depth and establish turf on all disturbed areas, except aggregate surface areas in accordance with Articles 1060 and 1660 of the NCDOT 2018 Standard Specifications.
3. Place aggregate-topsoil course, 4½-inch on both shoulders.
4. See Slope Rounding of Parkway Sections in the plans for slope stake length.
5. Construct access roads within the limits of construction access with a maximum profile grade of 12% as shown in the plans and directed by the Engineer .
6. Remove temporary fills for construction access and stabilize distrubed areas as directed by the Engineer and according to the Special Provisions.

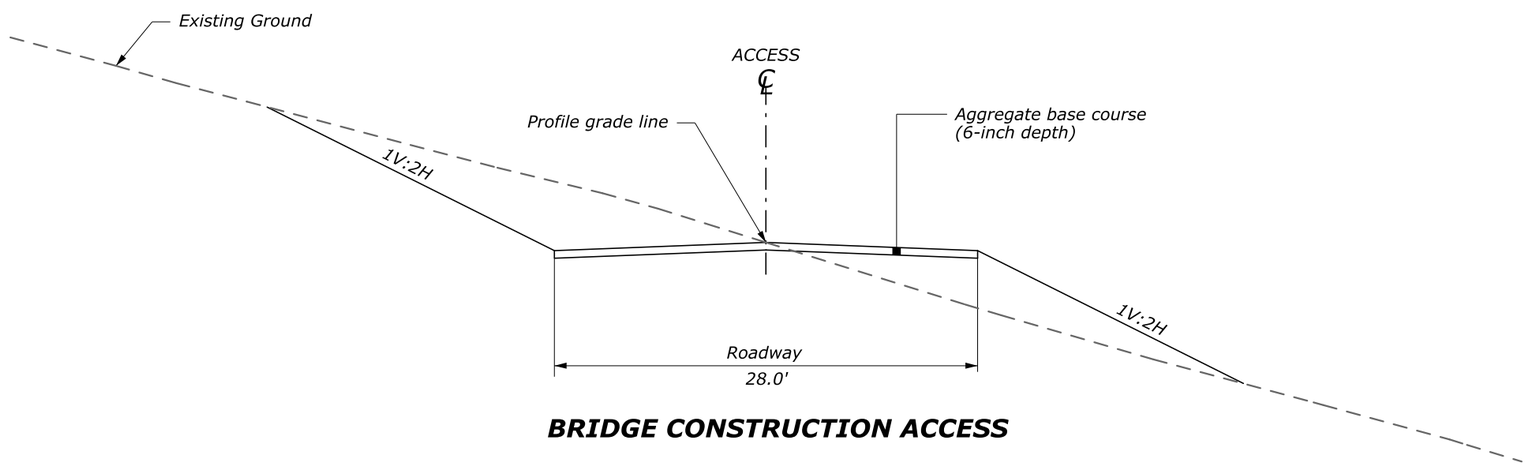

BRIDGE CONSTRUCTION ACCESS

No scale

U.S. DEPARTMENT OF TRANSPORTATION
FEDERAL HIGHWAY ADMINISTRATION
EASTERN FEDERAL LANDS HIGHWAY DIVISION
STERLING, VIRGINIA

BLUE RIDGE PARKWAY

TYPICAL SECTIONS

MOUNTAINS TO SEA TRAIL CONSTRUCTION ACCESS

18-Dec-2018 04:16 PM M:\PROJECTS_STATE_DOT\NC\blri_I26_negotProj_Dev\CADD\From_Eng_Support\As_Requested_3_2017\B01-B04_B07-BLRI_I_26_NEPA_typ.dgn

STATE	PROJECT	SHEET NUMBER
NC	BLRI OVER I-26	C01

SOIL EROSION CONTROL SUMMARY

Sheet	STATION	SIDE	TEMPORARY INLET PROTECTION, TYPE C EA	TEMPORARY INLET PROTECTION, TYPE D EA	TEMPORARY SILT FENCE LF	STONE FOR EROSION CONTROL, CLASS A TON	STONE FOR EROSION CONTROL, CLASS B TON	BLRI TEMPORARY SEEDING LB	TEMPORARY SLOPE DRAIN LF	SILT EXCAVATION CY	MATTING FOR EROSION CONTROL (RECP TYPE 2.A) SY	MATTING FOR EROSION CONTROL (RECP TYPE 2.B) SY	REMARKS
A08		RT LT				84							CONSTRUCTION ENTRANCE
A08		RT LT				84							CONSTRUCTION ENTRANCE
M07	900+98 to 910+49	RT LT									2632		
M08	498+00 to 502+26	RT LT			430								
M08	499+97 to 500+90	RT LT			100								
M08	502+09 to 504+86	RT LT			305								
M09	504+71 to 506+27	RT LT					1	10	190	69.5			RISER BASIN
M09	505+17	RT LT											
M09	505+67	RT LT		1	200								
M09	508+92 to 511+01	RT LT			80								
M10	510+56 to 511+33	RT LT		1									
M10	510+88	RT LT											
M10	511+01	RT LT	1		215								
M10	511+23 to 512+21	RT LT	1						215				
M10	511+96 to 513+88	RT LT			98								
M11	516+76 to 517+04	RT LT			80								
M11	517+69 to 517+82	RT LT											
Subtotal this sheet			2	2	1,508	168	1	10	405	70	2,632		

U.S. DEPARTMENT OF TRANSPORTATION
FEDERAL HIGHWAY ADMINISTRATION
EASTERN FEDERAL LANDS HIGHWAY DIVISION
STERLING, VIRGINIA

BLUE RIDGE PARKWAY

SUMMARIES AND SCHEDULES

SOIL EROSION CONTROL
(SHEET 1 OF 3)

21-Mar-2019 06:02 PM \\hfl\i5\filesrvs\hd.fwuadd.gov\data\PROJECTS_STATE_DOT\NC\blri_I26_nepa\Proj_Dev\CADD\From_Eng_Support\As_Requested_3_2017\C01-BLRI_I_26_NEPA_qty.dgn

SOIL EROSION CONTROL SUMMARY

Sheet	STATION		TEMPORARY INLET PROTECTION, TYPE C EA	TEMPORARY INLET PROTECTION, TYPE D EA	TEMPORARY SILT FENCE LF	STONE FOR EROSION CONTROL, CLASS A TON	STONE FOR EROSION CONTROL, CLASS B TON	BLRI TEMPORARY SEEDING LB	TEMPORARY SLOPE DRAIN LF	SILT EXCAVATION CY	MATTING FOR EROSION CONTROL (RECP TYPE 2.A) SY	MATTING FOR EROSION CONTROL (RECP TYPE 2.B) SY	REMARKS
M11	518+68 to 518+90	RT LT	3										
M11	521+98 to 523+84	RT LT							200				
M12	523+57	RT LT		1									
M12	523+83 to 525+93	RT LT							210				
M12	525+43	RT LT	1										
M12	525+55	RT LT					1	10		69.5			RISER BASIN
M13	525+74 to 528+48	RT LT			300								
M13	527+10	RT LT		1									
M13	528+55 to 530+67	RT LT			235								
M12	600+71 to 602+59	RT LT			210								
M13	527+50 to 531+50	RT LT										859.0	
M13	530+44	RT LT		1									
M14	511+23 to 512+21	RT LT			480								PIERS
M14	511+23 to 512+21	RT LT			215								PIERS
M14	517+69 to 517+82	RT LT			80								PIERS
M21-M26		RT LT			80			160					
Subtotal this sheet			4	3	1,600		1	170	410	70		859	
Subtotal Sheet 1			2	2	1,508	168	1	10	405	70	2,632		
Total			6	5	3,108	168	2	180	815	139	2,632	859	
Rounded Total			6	5	3,325	190	2	220	900	155	2,900	950	

U.S. DEPARTMENT OF TRANSPORTATION
FEDERAL HIGHWAY ADMINISTRATION
EASTERN FEDERAL LANDS HIGHWAY DIVISION
STERLING, VIRGINIA

BLUE RIDGE PARKWAY

SUMMARIES AND SCHEDULES

SOIL EROSION CONTROL
(SHEET 2 OF 3)

21-Mar-2019 06:02 PM \\Vhf\ILSFfileserve\fhd1\fwvadot.gov\ddot\PROJECTS_STATE_DOT\NC\blri_i_26_nepa\Proj_Dev\CADD-From_Eng_Support\As_Requested_3_2017\C01-BLRI_I_26_NEPA_qty.dgn

STATE	PROJECT	SHEET NUMBER
NC	BLRI OVER I-26	C03

SOIL EROSION CONTROL SUMMARY

Sheet	STATION	SIDE	MATTING FOR EROSION CONTROL (RECP TYPE 2.C) SY	MATTING FOR EROSION CONTROL (RECP TYPE 2.D) SY	MATTING FOR EROSION CONTROL (RECP TYPE 3.B) SY	MATTING FOR EROSION CONTROL (RECP TYPE 4) SY	COIR FIBER MAT SY	RISER BASIN EA	WATTLE LF	COIR FIBER BAFFLE LF	SEEDING AND MULCHING ACR		REMARKS
M07	499+00 to 502+03	RT LT			119						0.9		
M07	500+92 to 503+75	RT LT	777										
M07	502+12 to 505+59	RT LT				825							
M08	502+03 to 510+20	RT LT		3,368									
M08	502+30	RT LT							21				
M08	503+75 to 505+75	RT LT		562					133				
M08	505+17	RT LT					60	1		60			
M08	505+75 to 508+00	RT LT	552						126				
M09	510+13 to 511+85	RT LT	219										
M09	510+20 to 511+83	RT LT	228										
M09	511+14	RT LT							28				
M10	517+89 to 523+61	RT LT		4,845					49				
M10	517+89 to 524+25	RT LT		3,568					112				
M10	518+30	RT LT							77				
M11	524+45 to 527+50	RT LT	1,123						98				
M11	523+68 to 526+75	RT LT				1034							
M11	525+55	RT LT					60	1		60			
M11	526+75 to 528+50	RT LT		397					231				
M14	511+23 to 512+21	RT LT	682										PIERS
M14	517+69 to 517+82	RT LT	325										PIERS
M15		RT LT		1,443									PIERS
Subtotal this sheet			3,906	14,183	119	1,859	120	2	875	120	1		
Total			3,906	14,183	119	1,859	120	2	875	120	1		
Rounded Total			4,300	15,600	130	2,050	135	2	1,000	130	9		

U.S. DEPARTMENT OF TRANSPORTATION
FEDERAL HIGHWAY ADMINISTRATION
EASTERN FEDERAL LANDS HIGHWAY DIVISION
STERLING, VIRGINIA

BLUE RIDGE PARKWAY

SUMMARIES AND SCHEDULES

SOIL EROSION CONTROL
(SHEET 3 OF 3)

21-Mar-2019 06:06 PM \\hf\ls5\lisserve\hd1\hwadat.gov\data\PROJECTS_STATE_DOT\NC\blrl_i_26_nepa\Proj_Dev\CADD\From_Eng_Support\As_Requested_3_2017\C01-BLRI_I_26_NEPA_qty.dgn

STATE	PROJECT	SHEET NUMBER
NC	BLRI OVER I-26	C04

BRIDGE SUMMARY

Description	Unit	Quantity
REMOVAL OF EXISTING STRUCTURE AT STA 514+86.3	LPSM	ALL
FOUNDATION EXCAVATION FOR END BENT 1 AT STA 514+86.3	LPSM	ALL
FOUNDATION EXCAVATION FOR END BENT 2 AT STA 514+86.3	LPSM	ALL
FOUNDATION EXCAVATION FOR BENT 1 AT STA 514+86.3	LPSM	ALL
FOUNDATION EXCAVATION FOR BENT 2 AT STA 514+86.3	LPSM	ALL
PDA TESTING	EA	2
GROOVING BRIDGE FLOORS	SF	23,000
CLASS AA CONCRETE (BRIDGE)	CY	490
BRIDGE APPROACH SLAB, STA 514+86.3	LPSM	All
REINFORCING STEEL (BRIDGE)	LB	69,500
PILE DRIVING EQUIPMENT SETUP FOR *** STEEL PILES (HP14X89)	EA	52
HP 14X89 STEEL PILES (HP14X89)	LF	2,912
CALTRANS BARRIER RAIL	LF	1,210
LATEX MODIFIED CONC OVERLAY	CY	110
PLACING & FINISHING OF LATEX MODIFIED CONC OVERLAY	SY	1,970
DISC BEARINGS	LPSM	ALL
MODULAR EXPANSION JOINT SEALS	LPSM	ALL
HIGH STRENGTH CONCRETE	CY	170
PRECAST SEGMENTAL BRIDGE	CY	2,225
STONE MASONRY FOR WINGWALL, PARAPET, AND ABUTMENT	CY	31
POST-TENSIONING STEEL	LB	147,300

U.S. DEPARTMENT OF TRANSPORTATION
FEDERAL HIGHWAY ADMINISTRATION
EASTERN FEDERAL LANDS HIGHWAY DIVISION
STERLING, VIRGINIA

BLUE RIDGE PARKWAY

SUMMARIES AND SCHEDULES

BRIDGE

21-Mar-2019 10:25 AM \\fhf115fileserve.fhdf.fhwa.dot.gov\data\PROJECTS_STATE_DOT\NC\blri_I26_nepa\Proj_Dev\CADD\From_Eng_Support\As_Requested_3_2017\C01-BLRI_I_26_NEPA_qty.dgn

STATE	PROJECT	SHEET NUMBER
NC	BLRI OVER I-26	C05

EARTHWORK SUMMARY

SHEET	STATION	UNCLASSIFIED EXCAVATION CY	EMBANKMENT CONSTRUCTION CY	TEMPORARY SHORING SY	REINFORCED SOIL SLOPES SY	GEOGRID SY	SELECT MATERIAL, CLASS II, TYPE 1 TON	UNCLASSIFIED STRUCTURE EXCAVATION CY			REMARKS
D01-D05	498+00 to 530+50		10,226								
D01-D05	500+00 to 530+50	127,520									
B05, D01-D03	502+03 to 505+63				917	21,956	17,188	9,094			
B05, D03-D05	523+98 to 527+01				826	19,918	17,189	9,095			
E01	600+12 to 602+00	4	14								
E02	700+06 to 700+58	8									
N02-N03	498+00 to 530+50			1,261				458			TEMPORARY WIDENING
	Subtotal this Sheet	127,532	10,240	1,261	1,743	41,874	34,377	18,647			
	Rounded Total	140,000	11,500	1,450	1,900	43,800	38,000	20,500			

U.S. DEPARTMENT OF TRANSPORTATION
FEDERAL HIGHWAY ADMINISTRATION
EASTERN FEDERAL LANDS HIGHWAY DIVISION
STERLING, VIRGINIA

BLUE RIDGE PARKWAY

SUMMARIES AND SCHEDULES

EARTHWORK

21-Mar-2019 06:07 PM \\fhf\l5f\lleserve.f\hd.fhwa.dot.gov\data\PROJECTS_STATE_DOT\NC\blri_l26_nepa\Proj_Dev\CADD\From_Eng_Support\As_Requested_3_2017\C01-BLRI_I_26_NEPA_qty.dgn

STATE	PROJECT	SHEET NUMBER
NC	BLRI OVER I-26	C06

PAVEMENT SUMMARY

SHEET	STATION	REMOVAL OF PAVED WATERWAY, ASPHALT SY	REMOVAL OF EXISTING ASPHALT PAVEMENT SY	GEOTEXTILE FOR PAVEMENT STABILIZATION SY	AGGREGATE BASE COURSE TON	PRIME COAT GAL	ASPHALT CONCRETE INTERMEDIATE COURSE, TYPE I19.0B TON	ASPHALT CONCRETE SURFACE COURSE, TYPE S9.5B TON	AGGREGATE TOPSOIL TON	RIGHT OF WAY MARKERS EACH	REMARKS
B04	800+52 to 803+56				28						
D01-D06	500+00 to 530+50			6,726	4,909						
D01-D03	500+00 to 511+68					1,564	843	379	177		
D02	507+69 to 507+69									1	
D03	511+69 to 511+69									1	
D03-D06	518+05 to 530+50					1,583	850	382	189		
D05	527+21 to 527+21									1	
E01	600+26 to 602+52				26						
E02	700+06 to 700+58				6						
E04	522+77 to 526+37				582	352	156	59	21		PARKING AREA
F01-F03	500+00 to 511+71		2,798								
F02	504+92 to 509+35	268									
F03-F05	517+14 to 530+50		3,055								
F04	518+67 to 523+54	135									
N01-N02	900+97 to 910+49			1,307	549		257				
B07					1,568						2 ACCESS ROADS
		403	5,853	8,033	7,668	3,499	2,106	820	387	3	
	Subtotal this Sheet	403	5,853	8,033	7,668	3,499	2,106	820	387	3	
	Rounded Total	425	6,500	9,250	8,400	3,800	2,300	900	425	3	

U.S. DEPARTMENT OF TRANSPORTATION
FEDERAL HIGHWAY ADMINISTRATION
EASTERN FEDERAL LANDS HIGHWAY DIVISION
STERLING, VIRGINIA

BLUE RIDGE PARKWAY

SUMMARIES AND SCHEDULES

PAVEMENT

21-Dec-2018 08:24 AM M:\PROJECTS_STATE_DOT\NC\blrl_I26_nepa\Proj_Dev\CADD\From_Eng_Support\As_Requested_3_20\NC01-BLRI_I_26_NEPA_qty.dgn

STATE	PROJECT	SHEET NUMBER
NC	BLRI OVER I-26	C07

DRAINAGE SUMMARY

SHEET	STATION	SIDE	18" RC PIPE CULVERTS, CLASS III LF	24" RC PIPE CULVERTS, CLASS III LF	18" CS PIPE CULVERTS, 0.064" THICK LF	PIPE REMOVAL LF	STONE MASONRY HEADWALLS FOR 18-INCH PIPE CULVERT EA	STONE MASONRY HEADWALLS FOR 24-INCH PIPE CULVERT EA	MASONRY DRAINAGE STRUCTURES (INLET, FLH TYPE 4A) EA	MASONRY DRAINAGE STRUCTURES (INLET, FLH TYPE 4B) EA	MASONRY DRAINAGE STRUCTURES (INLET, FLH TYPE 6A-6) EA	CUSTOM 3'X5' CATCH BASIN) EA	REMOVAL OF CATCH BASIN EA	PAVED WATERWAY, TYPE 5, ASPHALT SY	RIPRAP, CLASS I TON	RIPRAP, CLASS B TON	GEOTEXTILE FOR DRAINAGE SY	REMARKS
D01	500+94 to 508+70	RT													4		12	
		LT												258				
D02	505+70 to 510+14	RT												154	10		12	
		LT																
D04	518+04 to 531+50	RT																
		LT												453				
D04	518+04 to 523+58	RT												187				
		LT																
D04	520+65 to 523+92	RT												213				
		LT																Near Trail 1
F02	504+97	RT				54												
		LT											1					
F02	510+88	RT				104												
		LT																
F03	511+20	RT				50									4		12	
		LT											1					
F04	523+51	RT				46												
		LT											1					
F05	526+66	RT																
		LT				71												
F05	530+43	RT															12	
		LT											1					
K01	505+67	RT		93				1							4		12	
		LT								1								
K02	510+88 to 511+03	RT		63				1				2		10	4			
		LT		96				1										
	Subtotal this Sheet			252		325		3		1		2	4	1,275	26		60	

U.S. DEPARTMENT OF TRANSPORTATION
FEDERAL HIGHWAY ADMINISTRATION
EASTERN FEDERAL LANDS HIGHWAY DIVISION
STERLING, VIRGINIA

BLUE RIDGE PARKWAY

SUMMARIES AND SCHEDULES

DRAINAGE
(SHEET 1 OF 2)

21-Mar-2019 06:08 PM \\Vhf\lfs1\lfseserve\lhd.fhwa.dot.gov\data\PROJECTS_STATE_DOT\NC\blri_i-26_nepa\Proj_Dev\CADD\From_Eng_Support\As_Requested_3_2017\C01-BLRI_I_26_NEPA_qty.dgn

STATE	PROJECT	SHEET NUMBER
NC	BLRI OVER I-26	C08

DRAINAGE SUMMARY

SHEET	STATION	SIDE	18" RC PIPE CULVERTS, CLASS III LF	24" RC PIPE CULVERTS, CLASS III LF	18" CS PIPE CULVERTS, 0.064" THICK LF	PIPE REMOVAL LF	STONE MASONRY HEADWALLS FOR 18-INCH PIPE CULVERT EA	STONE MASONRY HEADWALLS FOR 24-INCH PIPE CULVERT EA	MASONRY DRAINAGE STRUCTURES (INLET, FLH TYPE 4A) EA	MASONRY DRAINAGE STRUCTURES (INLET, FLH TYPE 4B) EA	MASONRY DRAINAGE STRUCTURES (INLET, FLH TYPE 6A-6) EA	CUSTOM 3'X5' CATCH BASIN EA	REMOVAL OF CATCH BASIN EA	PAVED WATERWAY, TYPE 5, ASPHALT SY	RIPRAP, CLASS I TON	RIPRAP, CLASS B TON	GEOTEXTILE FOR DRAINAGE SY	REMARKS
K03	511+56	RT																
		LT	50									1						
K04	518+17	RT																
		LT	68									1						
K05	518+88	RT																
		LT	44				1					1						
K06	525+50	RT																
		LT	17				1				1							
K07	527+10	RT						1										
		LT		73						1					4		12.0	
K08	530+43	RT						1										
		LT		73						1					4			
K09	600+43	RT							1									
		LT	90				1								2		8	
K10	800+12	RT					1											
		LT	20				1											
K11	803+24	RT					1											
		LT	30				1											
M07	505+17	RT																
		LT			60											2		
M07	525+55	RT																
		LT			60											2		
A08		RT																
		LT															400	CONSTRUCTION ENTRANCES
		RT																
		LT																
		RT																
		LT																
		RT																
		LT																
		RT																
		LT																
		RT																
		LT																
		RT																
		LT																
		RT																
		LT																
		RT																
		LT																
Subtotal this Sheet			319	146	120		7	2	1	2	1	3			10	4	420	
Subtotal Sheet 1				252		325		3		1		2	4	1,275	26		60	
Total			319	398	120	325	7	5	1	3	1	5	4	1,275	36	4	480	
Rounded Total			320	405	130	340	7	5	1	3	1	5	4	1,400	40	5	520	

U.S. DEPARTMENT OF TRANSPORTATION
FEDERAL HIGHWAY ADMINISTRATION
EASTERN FEDERAL LANDS HIGHWAY DIVISION
STERLING, VIRGINIA

BLUE RIDGE PARKWAY

SUMMARIES AND SCHEDULES

DRAINAGE
(SHEET 2 OF 2)

21-Mar-2019 06:09 PM \\vhf\ilsf\lisserved\hwy.dot.gov\data\PROJECTS_STATE_DOT\NC\blrl_i_26_NEPA_qty.dgn

STATE	PROJECT	SHEET NUMBER
NC	BLRI OVER I-26	C09

CURBS, SIDEWALKS, RAMPS AND GUARDRAIL SUMMARY

SHEET	STATION	SIDE	GRANITE CURB LF	6'X18" CONCRETE CURB LF	4" CONCRETE SIDEWALK SY	CONCRETE CURB RAMPS EA	REMOVE EXISTING GUARDRAIL LF	GUARDRAIL SYSTEM, STEEL-BACKED TIMBER, TYPE A (SBTA) LF	GUARDRAIL TERMINAL SECTION, TYPE SBT - TANGENT EACH	STONE MASONRY GUARDWALL LF
D01-D02	498+43 to 498+84	RT						657	1	
D01-D02	498+84 to 505+50	RT							1	
D03	510+40 to 511+83	LT		15	77	1				128
D03	510+40 to 511+22	RT								128
D03	511+22 to 511+83	RT								
D04	517+90 to 519+75	RT								171
D04	517+90 to 519+76	LT		12	101	1				171
D05	523+64 to 524+05	RT							1	
D05	527+90 to 528+31	RT							1	
D05	524+05 to 527+90	RT						385		
E04	522+89 to 526+25	LT	349			1				
F02	509+45 to 511+53	LT					218			
D05	523+10 to 523+54	RT						43		
Subtotal this Sheet			349	27	178	3	218	1,085	4	598
Rounded Total			380	35	190	3	230	1,200	4	655

U.S. DEPARTMENT OF TRANSPORTATION
FEDERAL HIGHWAY ADMINISTRATION
EASTERN FEDERAL LANDS HIGHWAY DIVISION
STERLING, VIRGINIA

BLUE RIDGE PARKWAY

SUMMARIES AND SCHEDULES

CRUBS, SIDEWALKS, RAMPS AND GUARDRAIL

21-Mar-2019 06:11 PM \\Vhf\lfs1\reserve1\hdf\hwudat.gov\data\PROJECTS_STATE_DOT\NC\blri.i26_nepa\Proj_Dev\CADD\From_Eng_Support\As_Requested_3_2017\C01-BLRI_I_26_NEPA_qty.dgn

STATE	PROJECT	SHEET NUMBER
NC	BLRI OVER I-26	C10

PAVEMENT STRIPING SUMMARY

SHEET	STATION	SIDE	PAINT PAVEMENT MARKINGS LINES (4", 20 MILS) LF			POLYUREA PAVEMENT MARKINGS LINES (4", 20 MILS) LF					REMARKS
			White	Yellow	Blue	White	Yellow	Blue			
N01	900+98 to 910+49	RT CL LT	855	1,901							TEMPORARY WIDENING
P01-P03	500+00 to 530+50	RT CL LT					6,100				
P03	523+50	RT CL LT				170					EDGE LINE
		RT CL LT									
		RT CL LT									
		RT CL LT									
		RT CL LT									
		RT CL LT									
		RT CL LT									
		RT CL LT									
		RT CL LT									
		RT CL LT									
		RT CL LT									
		RT CL LT									
		RT CL LT									
			855	1,901		170	6,100				
Subtotal This sheet			2,756			6,270					
Rounded Total			2,900			6,600					

Note: All pavement marking lengths are in 4-inch width equivalents.

U.S. DEPARTMENT OF TRANSPORTATION
FEDERAL HIGHWAY ADMINISTRATION
EASTERN FEDERAL LANDS HIGHWAY DIVISION
STERLING, VIRGINIA

BLUE RIDGE PARKWAY

SUMMARIES AND SCHEDULES

PAVEMENT STRIPING

16-Dec-2018 03:55 PM M:\PROJECTS_STATE_DOT\NC\blri_I26_nepa\Proj_Dev\CADD\From_Eng_Support\As_Requested_3_2017\C01-BLRI_I_26_NEPA_qty.dgn

STATE	PROJECT	SHEET NUMBER
NC	BLRI OVER I-26	C11

PERMANENT AND CONSTRUCTION SIGNS

Sheet No. or Detail No.	MUTCD NO.	SIGN TEXT	PANEL SIZE WIDTH (in)	PANEL SIZE HEIGHT (in)	PANEL SIZE AREA (sqft)	COLOR COMBINATION	QUANTITY	CONTRACTOR FURNISHED, TYPE E SIGN	WORK ZONE SIGNS (STATIONARY) SF	WORK ZONE SIGNS (PORTABLE) SF		REMARKS
NCDOT 1101.01	G20-2	END ROAD WORK	36	18	4.50	BLACK ON ORANGE	2		9.0			
NCDOT 1101.01	W20-1	ROAD WORK AHEAD	36	36	9.00	BLACK ON ORANGE	2		18.0			
A03	SPECIAL	TRUCK ENTRANCE	48	48	16.00	BLACK ON ORANGE	4		64.0			NCDOT W14-12A
NCDOT 1101.02	W20-4	ONE LANE ROAD AHEAD	48	48	16.00	BLACK ON ORANGE	2			32.0		
NCDOT 1101.02	W3-4	BE PREPARED TO STOP	48	48	16.00	BLACK ON ORANGE	2			32.0		
NCDOT 1101.02	W20-7A	FLAGGER (SYMBOL)	48	48	16.00	BLACK ON ORANGE	2			32.0		
NCDOT 1101.02	G20-4	PILOT CAR FOLLOW ME	36	18	4.50	BLACK ON ORANGE	1			4.5		
N03	R4-1	DO NOT PASS	24	30	5.00	BLACK ON WHITE	2		10.0			
N03	W5-1	ROAD NARROWS	36	36	9.00	BLACK ON ORANGE	2		18.0			
N03	W13-1P	XX MPH	24	24	4.00	BLACK ON ORANGE	2		8.0			
P01	W1-2	CURVE RT	36	36	9.00	BLACK ON YELLOW	1	9.0				
P01	W1-2	CURVE LT	36	36	9.00	BLACK ON YELLOW	1	9.0				
P01	W13-1P	XX MPH	24	24	4.00	BLACK ON WHITE	2	8.0				
		Subtotal this Sheet			117.5		25	26	127	101		
		Rounded Total			*		*	30	135	110		

* For information only For information only

NOTE: Construct and erect all signs in accordance with the "Manual on Uniform Traffic Control Devices" (MUTCD), latest edition.

U.S. DEPARTMENT OF TRANSPORTATION
FEDERAL HIGHWAY ADMINISTRATION
EASTERN FEDERAL LANDS HIGHWAY DIVISION
STERLING, VIRGINIA

BLUE RIDGE PARKWAY

SUMMARIES AND SCHEDULES

PERMANENT AND CONSTRUCTION SIGNS

16-Dec-2018 04:01 PM M:\PROJECTS_STATE_DOT\NC\blri_126_repo\Proj_Dev\CADD\From_Eng_Support\As_Requested_3_2017\C01-BLRI_I_26_NEPA_qty.dgn

STATE	PROJECT	SHEET NUMBER
NC	BLRI OVER I-26	D01

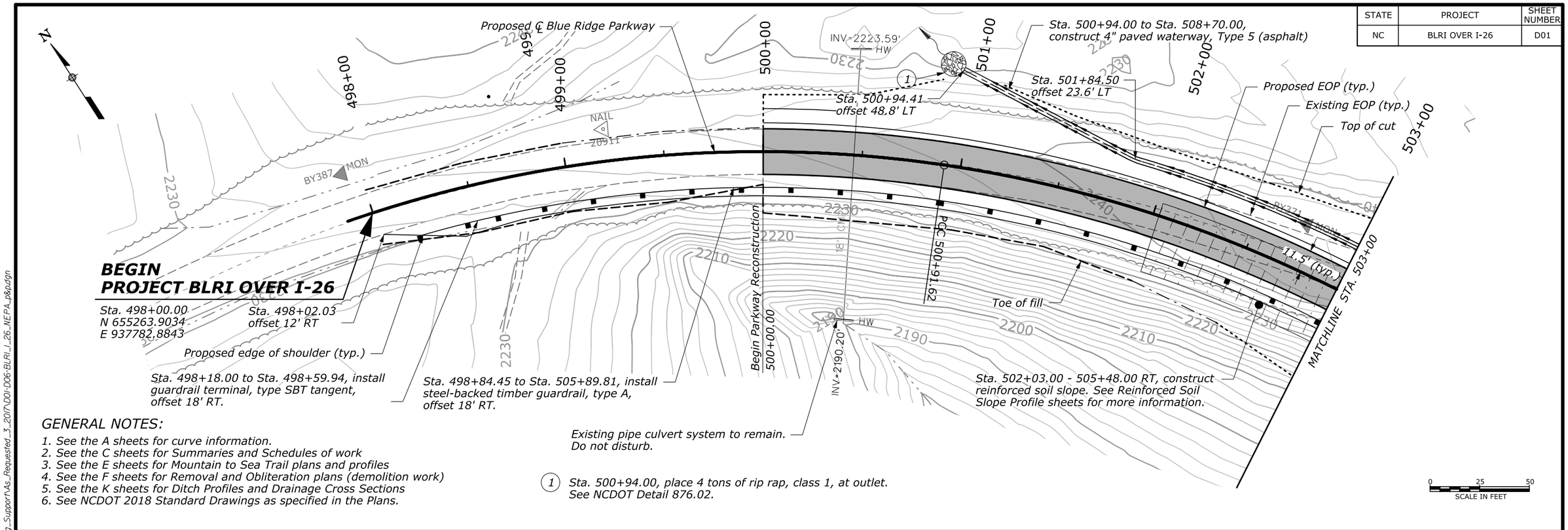

GENERAL NOTES:

1. See the A sheets for curve information.
2. See the C sheets for Summaries and Schedules of work
3. See the E sheets for Mountain to Sea Trail plans and profiles
4. See the F sheets for Removal and Obliteration plans (demolition work)
5. See the K sheets for Ditch Profiles and Drainage Cross Sections
6. See NCDOT 2018 Standard Drawings as specified in the Plans.

(1) Sta. 500+94.00, place 4 tons of rip rap, class 1, at outlet. See NCDOT Detail 876.02.

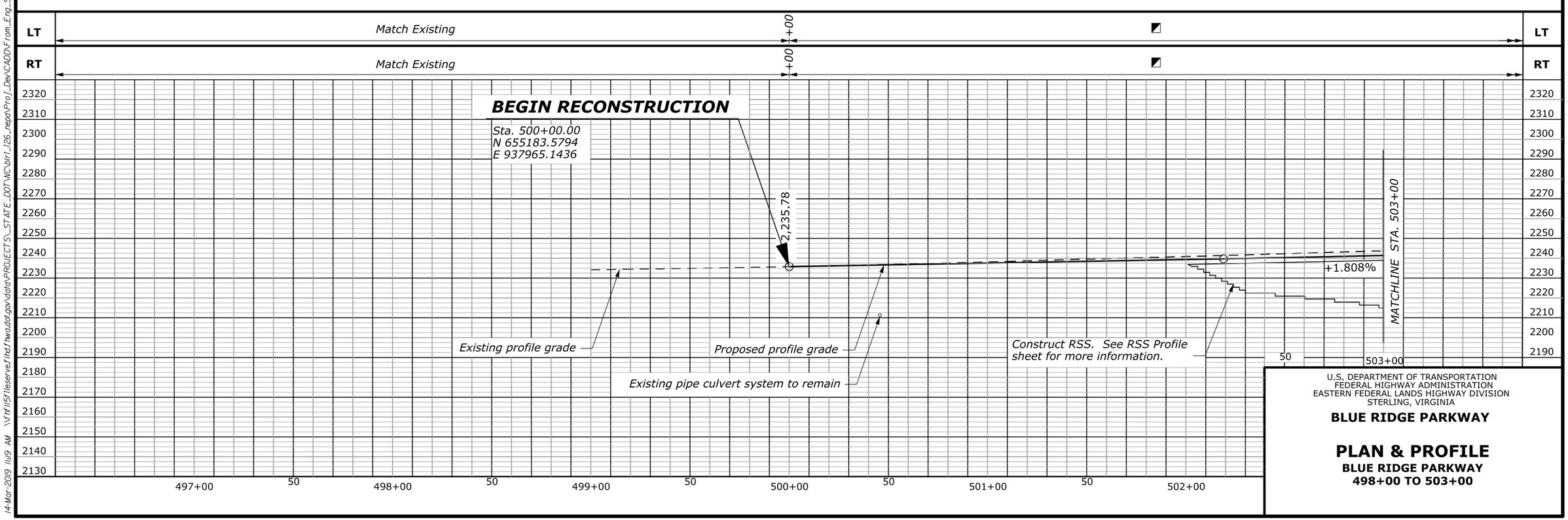

U.S. DEPARTMENT OF TRANSPORTATION
FEDERAL HIGHWAY ADMINISTRATION
EASTERN FEDERAL LANDS HIGHWAY DIVISION
STERLING, VIRGINIA

BLUE RIDGE PARKWAY

PLAN & PROFILE

BLUE RIDGE PARKWAY
498+00 TO 503+00

14-Mar-2019 11:19 AM \\fhf115fileserve.fihd.fhwa.dot.gov\data\PROJECTS_STATE_DOT\NC\blri_i26_nepa\Proj_Dev\CADD\From_Eng_Support\As_Requested_3_2017\D01-D06-BLRI_I_26_NEPA_p&p.dgn

STATE	PROJECT	SHEET NUMBER
NC	BLRI OVER I-26	D02

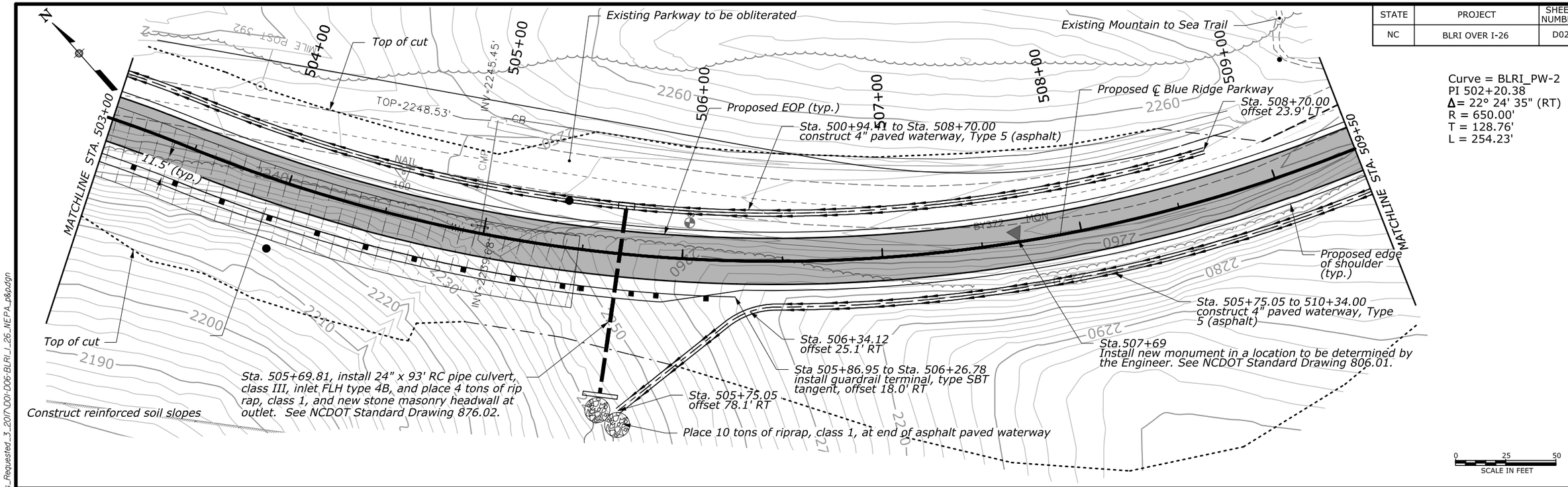

Curve = BLRI_PW-2
PI 502+20.38
Δ= 22° 24' 35" (RT)
R = 650.00'
T = 128.76'
L = 254.23'

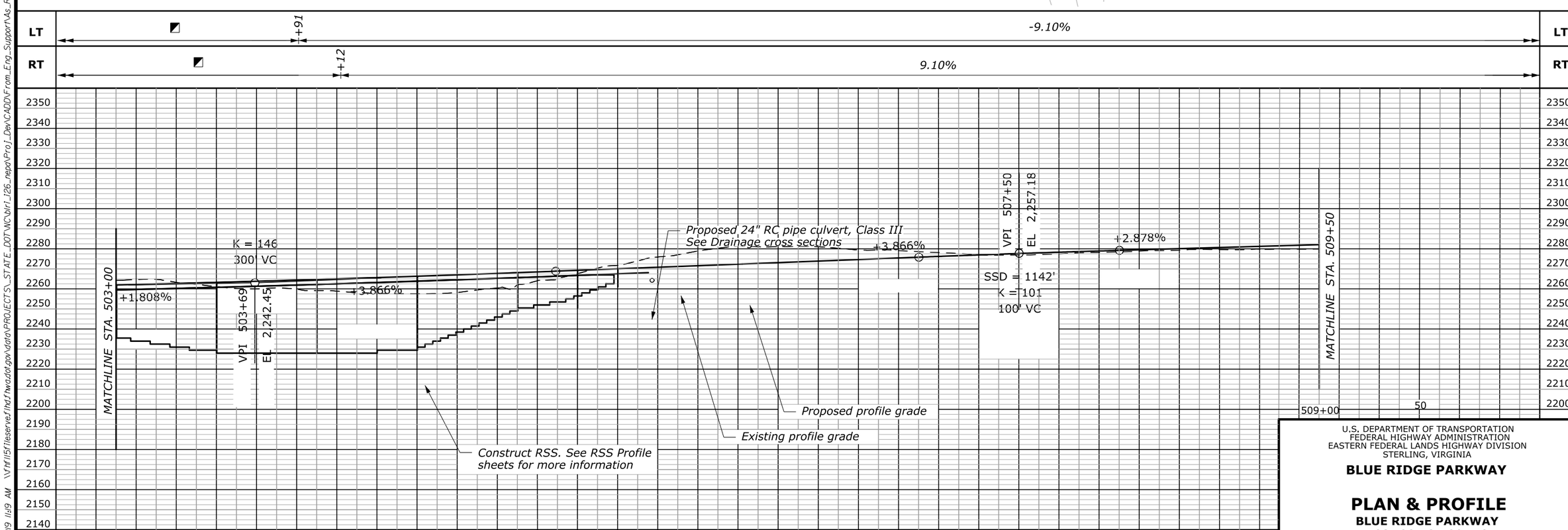

U.S. DEPARTMENT OF TRANSPORTATION
FEDERAL HIGHWAY ADMINISTRATION
EASTERN FEDERAL LANDS HIGHWAY DIVISION
STERLING, VIRGINIA

BLUE RIDGE PARKWAY

PLAN & PROFILE

BLUE RIDGE PARKWAY
503+00 TO 509+50

14-Mar-2019 11:19 AM \\fhfl15fileserve.fihd.fhwa.dot.gov\data\PROJECTS_STATE_DOT\NC\blri_i26_nepa\Proj_Dev\CADD\From_Eng_Support\As_Requested_3_2017\D01-D06-BLRI_I_26_NEPA_p&p.dgn

STATE	PROJECT	SHEET NUMBER
NC	BLRI OVER I-26	D03

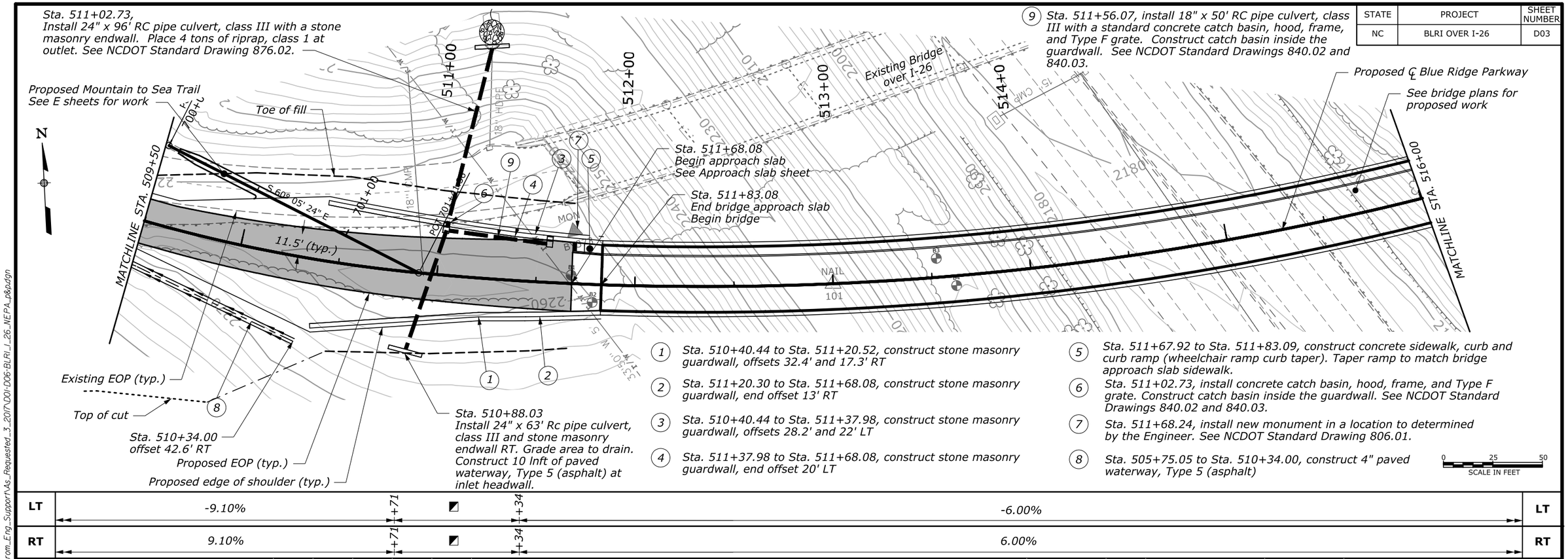

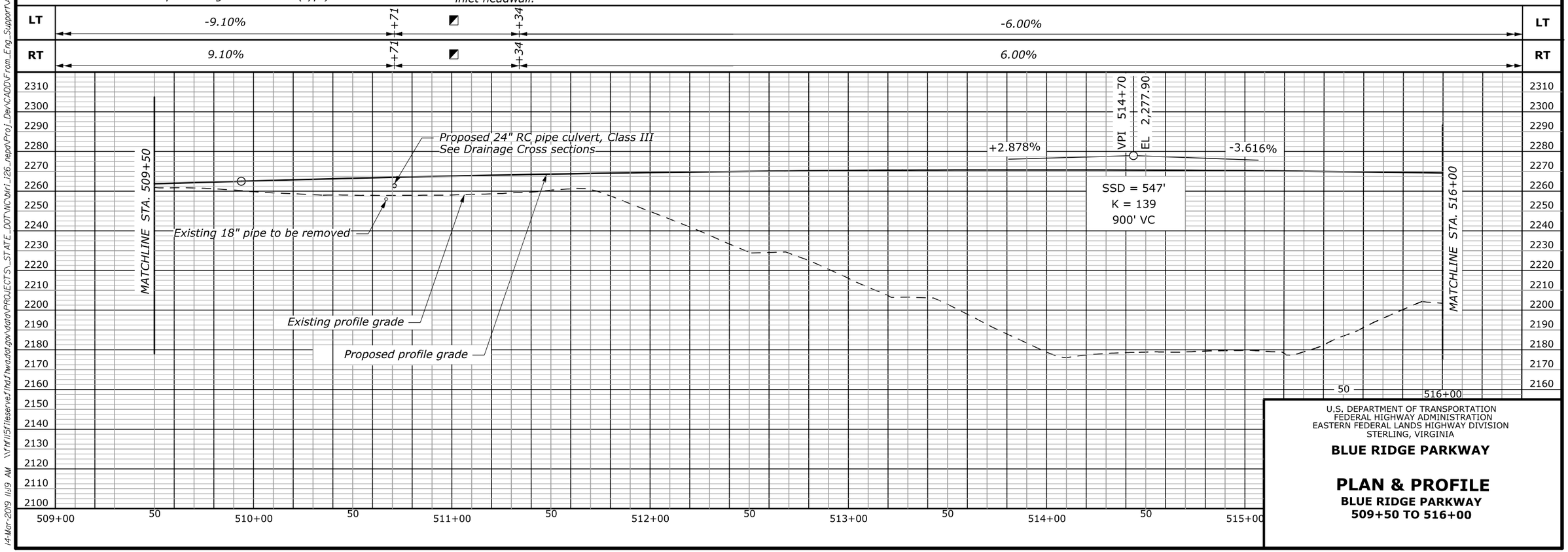

U.S. DEPARTMENT OF TRANSPORTATION
FEDERAL HIGHWAY ADMINISTRATION
EASTERN FEDERAL LANDS HIGHWAY DIVISION
STERLING, VIRGINIA

BLUE RIDGE PARKWAY

PLAN & PROFILE

BLUE RIDGE PARKWAY
509+50 TO 516+00

14-Mar-2019 11:19 AM \\frhf115fileserve.fhwa.dot.gov\data\PROJECTS_STATE_DOT\NC\blri_i26_repo\Proj_Dev\CADD\From_Eng_Support\As_Requested_3_20\7\D01-D06-BLRI_I_26_NEPA_p&pdgn

STATE	PROJECT	SHEET NUMBER
NC	BLRI OVER I-26	D04

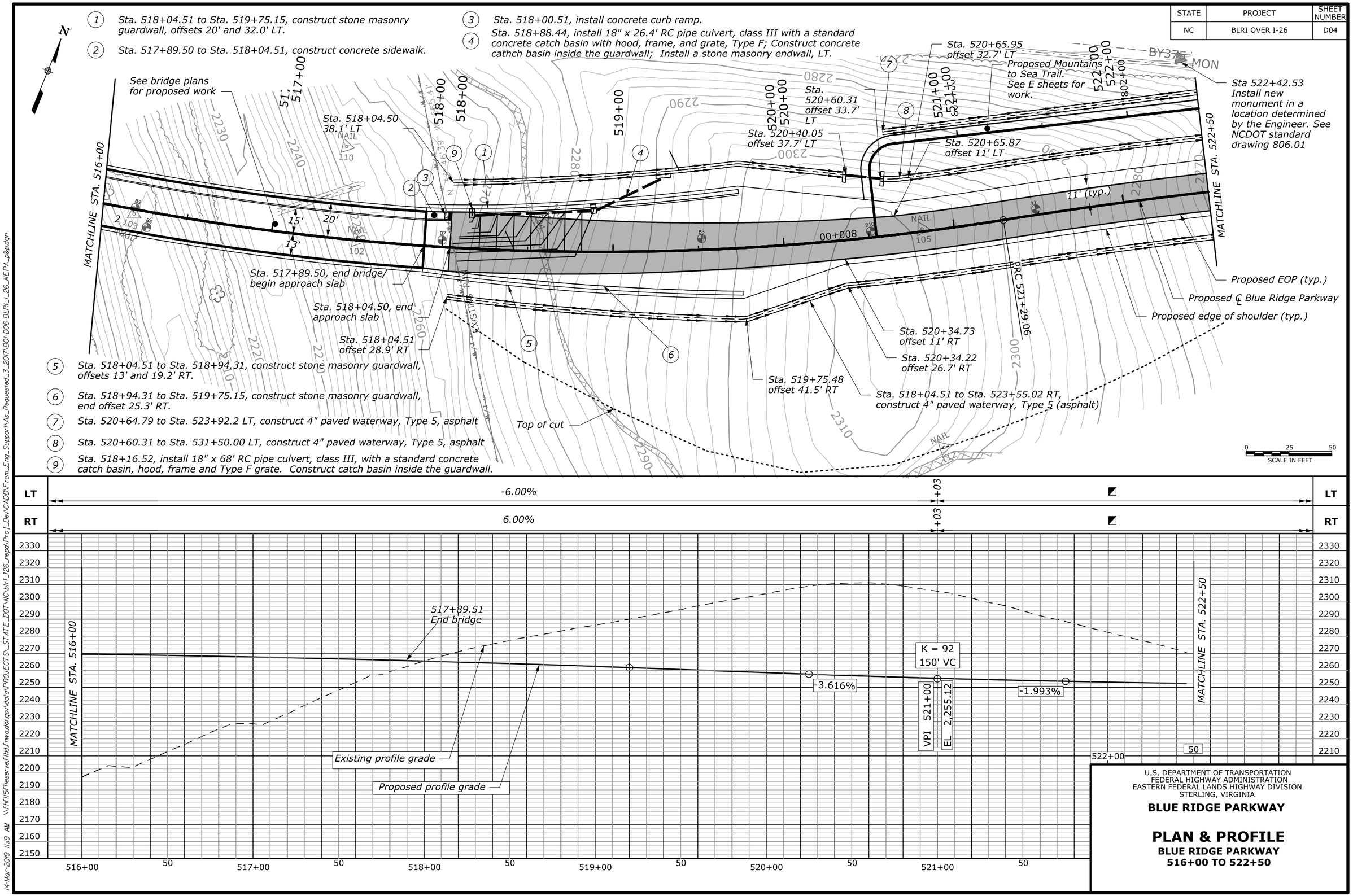

U.S. DEPARTMENT OF TRANSPORTATION
FEDERAL HIGHWAY ADMINISTRATION
EASTERN FEDERAL LANDS HIGHWAY DIVISION
STERLING, VIRGINIA

BLUE RIDGE PARKWAY

PLAN & PROFILE

BLUE RIDGE PARKWAY
516+00 TO 522+50

14-Mar-2019 11:19 AM \\fhfl15fileserve.flhd.fhwa.dot.gov\data\PROJECTS_STATE_DOT\NC\blri_I26_nepa\Proj_Dev\CADD\From_Eng_Support\As_Requested_3_2017\D01-D06-BLRI_I_26_NEPA_p&p.dgn

STATE	PROJECT	SHEET NUMBER
NC	BLRI OVER I-26	D05

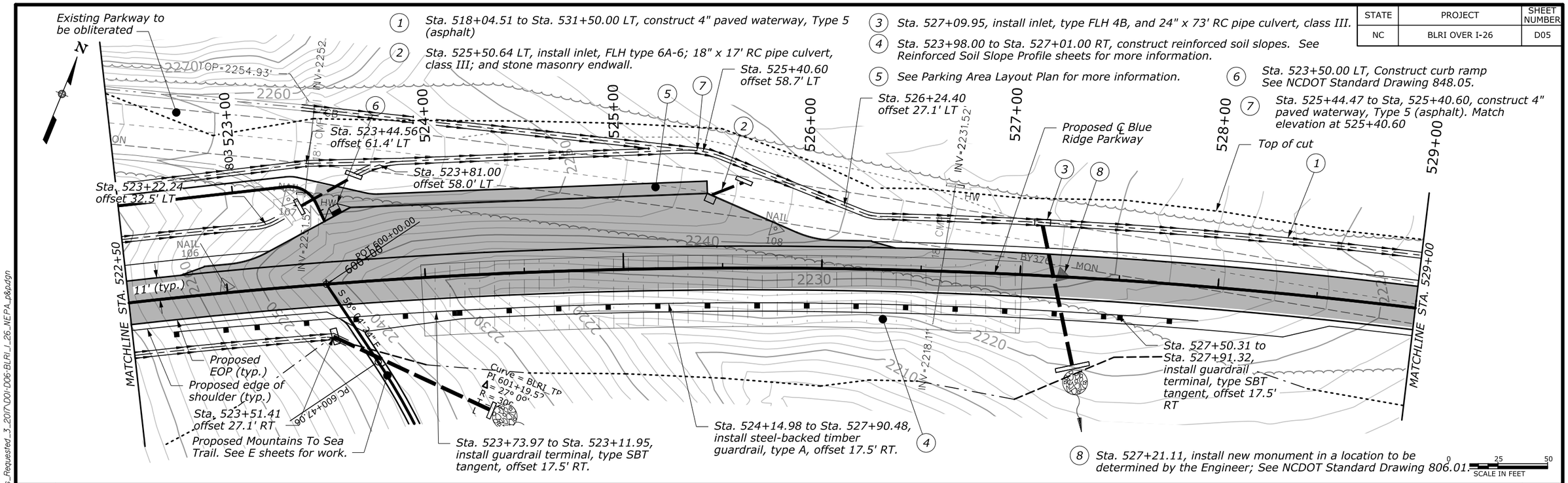

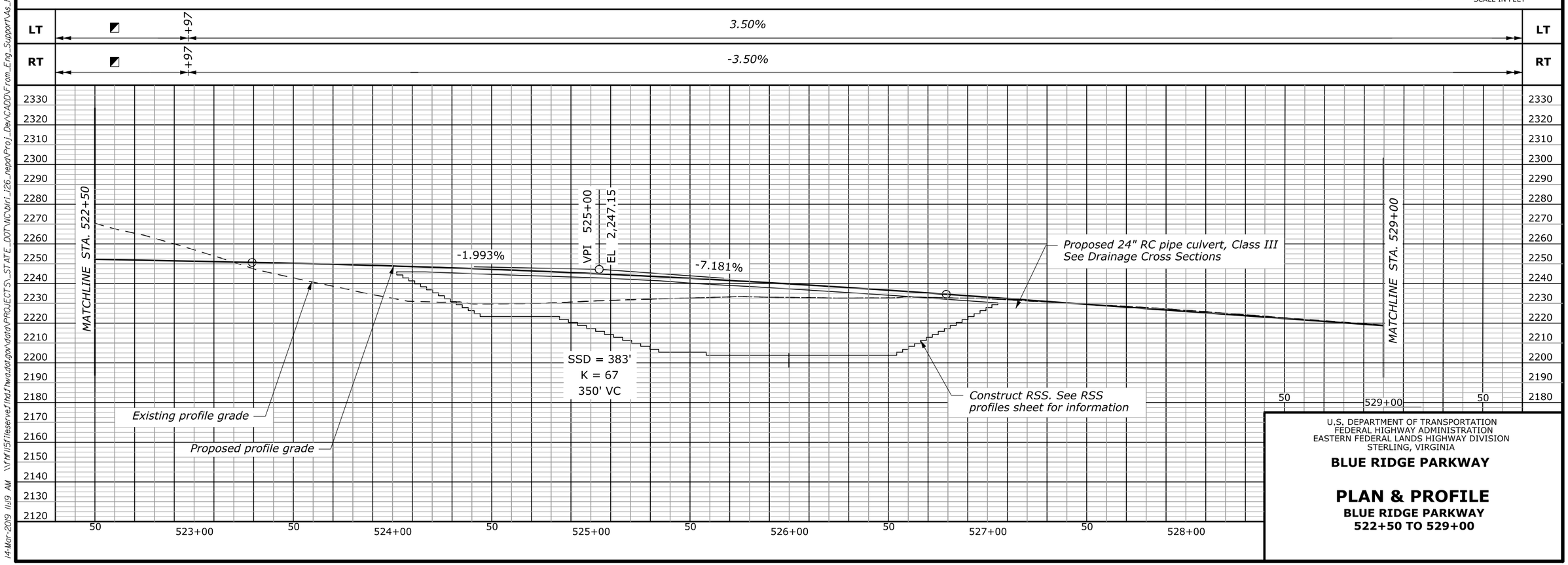

U.S. DEPARTMENT OF TRANSPORTATION
FEDERAL HIGHWAY ADMINISTRATION
EASTERN FEDERAL LANDS HIGHWAY DIVISION
STERLING, VIRGINIA

BLUE RIDGE PARKWAY

PLAN & PROFILE

BLUE RIDGE PARKWAY
522+50 TO 529+00

14-Mar-2019 11:19 AM \\frhf\l5fileserve.fhwa.dot.gov\data\PROJECTS_STATE_DOT\NC\blri_i26_repo\Proj_Dev\CADD\From_Eng_Support\As_Requested_3_2017\D01\D06-BLRI_I_26_NEPA_p&pdgn

STATE	PROJECT	SHEET NUMBER
NC	BLRI OVER I-26	D06

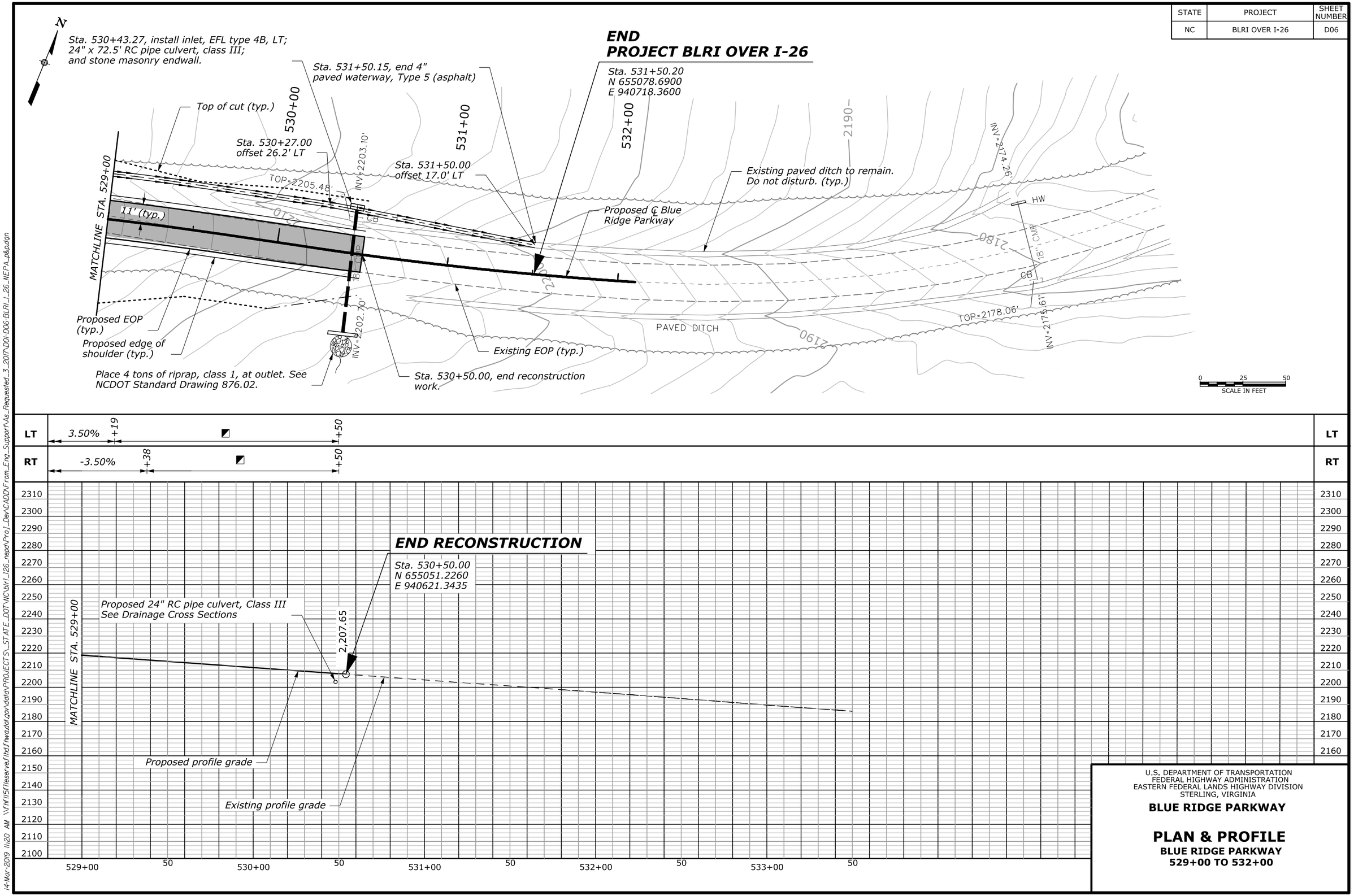

U.S. DEPARTMENT OF TRANSPORTATION
FEDERAL HIGHWAY ADMINISTRATION
EASTERN FEDERAL LANDS HIGHWAY DIVISION
STERLING, VIRGINIA

BLUE RIDGE PARKWAY

PLAN & PROFILE

BLUE RIDGE PARKWAY
529+00 TO 532+00

14-Mar-2019 11:20 AM \\fhfl15fileserve.flhd.fhwa.dot.gov\data\PROJECTS_STATE_DOT\NC\blri_i26_nepa\Proj_Dev\CADD\From_Eng_Support\As_Requested_3_2017\D01-D06-BLRI_I_26_NEPA_p&p.dgn

STATE	PROJECT	SHEET NUMBER
NC	BLRI OVER I-26	D07

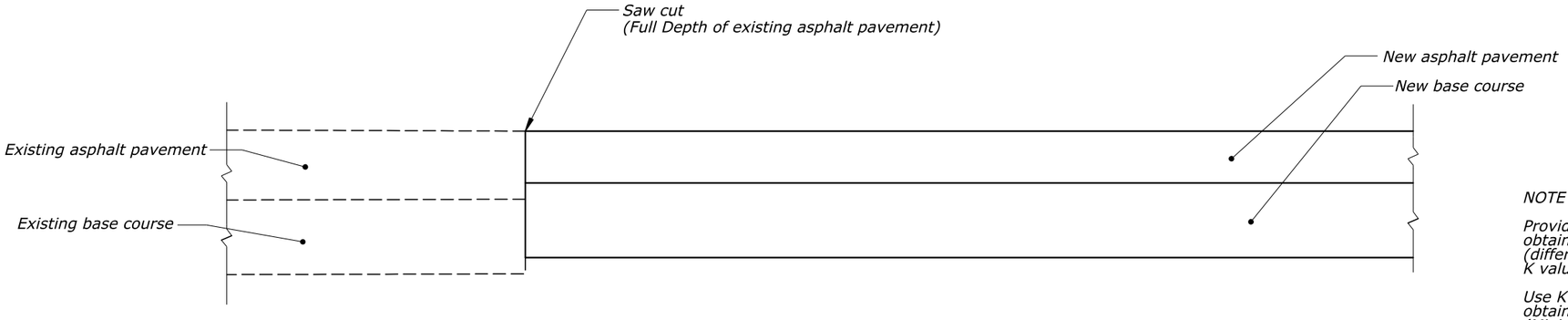

NEW PAVEMENT

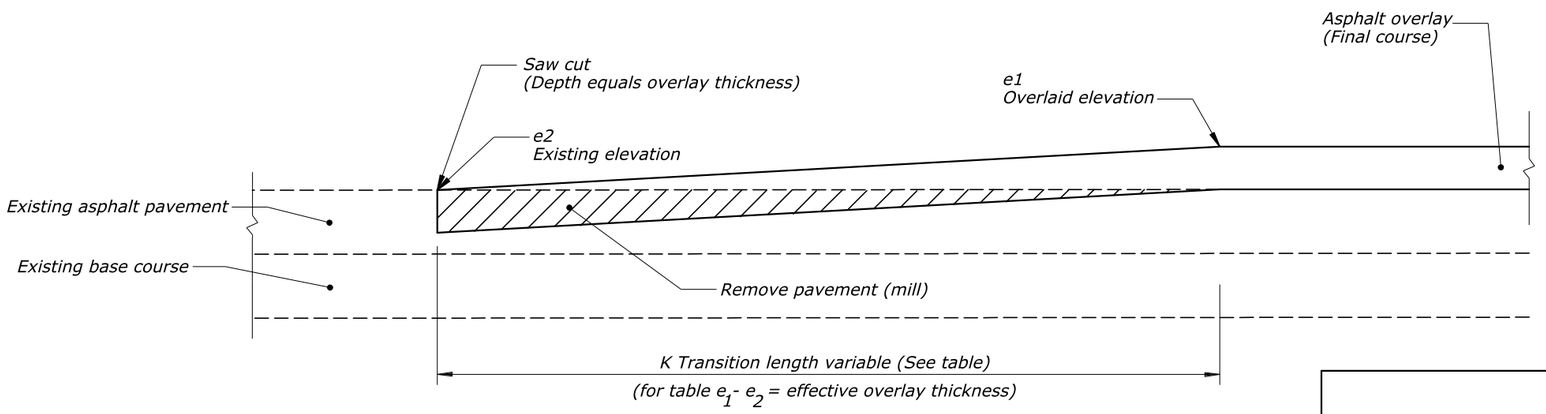

OVERLAY

NOTE :

Provide a transition length in feet that is not less than the value obtained by multiplying the effective overlay thickness in inches (difference between the existing and overlaid elevations) by the K value from the Table for the posted speed of the roadway.

Use K*[e1-e2]=T, or K*[d1-d2]=T (whichever applies), to obtain the transition length.
(Minimum transition length=30 feet)

Example :
If the posted speed is 55 MPH
Effective overlay thickness = 2 inches
Then the minimum transition length =
2 inches x 42.5 ft./in. = 85 feet.

K VALUE TABLE (ft/in)

POSTED SPEED (MPH) *	30	35	40	45	50	55	60	65	70	75
K	30	32.5	35	37.5	40	42.5	45	47.5	50	52.5

* Use a K Value of 30 for speeds less than 30 MPH.

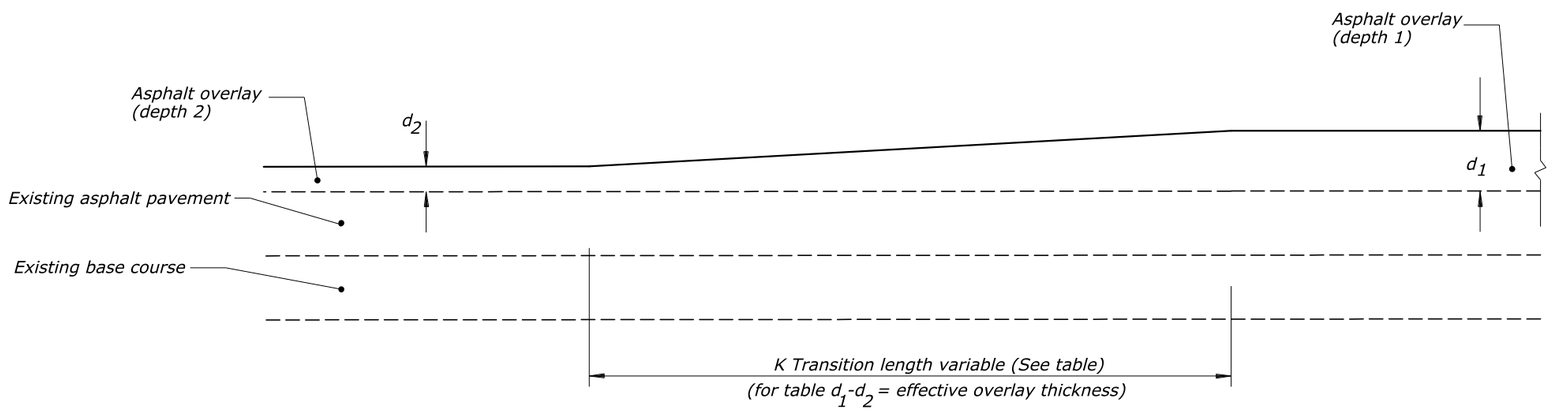

OVERLAY - DEPTH TRANSITIONS

NO SCALE

U.S. DEPARTMENT OF TRANSPORTATION
FEDERAL HIGHWAY ADMINISTRATION
EASTERN FEDERAL LANDS HIGHWAY DIVISION
STERLING, VIRGINIA

BLUE RIDGE PARKWAY

PAVEMENT TRANSITIONS

10-Dec-2018 01:17 PM M:\PROJECTS_STATE_DOT\NC\blri_i26_nepo\Proj_Dev\CADD\From_Eng_Support\As_Requested_3_2017\D07-st4010i_detail.dgn

STATE	PROJECT	SHEET NUMBER
NC	BLRI OVER I-26	D08

NOTES:

1. The approximate shape of the paved waterway is an arc with a radius of 2.9 feet.

2. At inlets and other special locations, widen and shape paved waterway to drain.

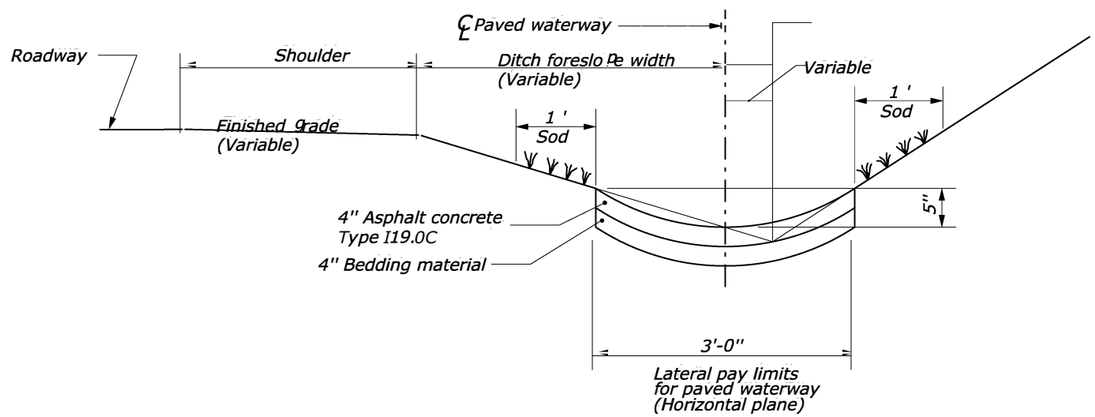

PAVED WATERWAY

NO SCALE

U.S. DEPARTMENT OF TRANSPORTATION
FEDERAL HIGHWAY ADMINISTRATION
EASTERN FEDERAL LANDS HIGHWAY DIVISION
STERLING, VIRGINIA

BLUE RIDGE PARKWAY

PAVED WATERWAY, TYPE 5 (ASPHALT)

10-Dec-2018 01:18 PM M:\PROJECTS_STATE_DOT\NC\blri_I26_repo\Proj_Dev\CADD-From_Eng_Support\As_Requested_3_2017\D08 sf60802_detail.dgn

STATE	PROJECT	SHEET NUMBER
NC	BLRI OVER I-26	D09

Note:

1. Place 3 inches, minimum aggregate bed course under all curb and gutter.

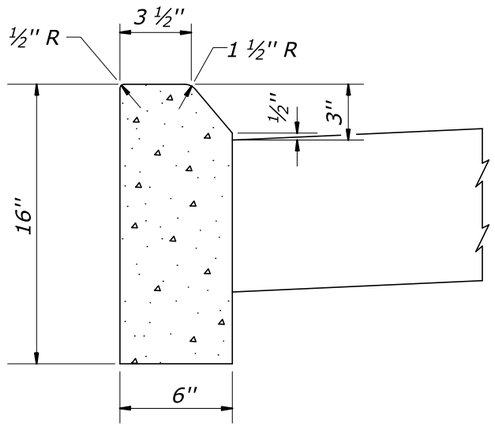

16-INCH DEPTH
(MOUNTABLE)

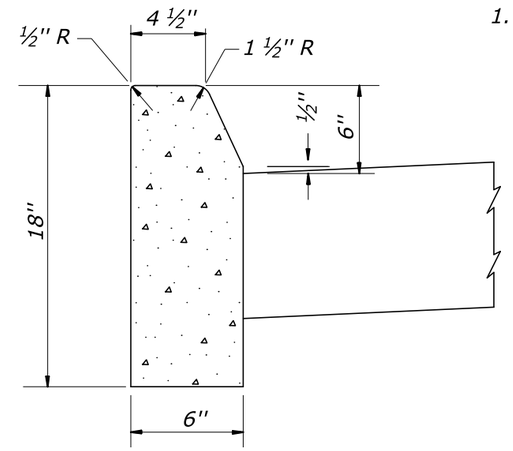

18-INCH DEPTH
(NON- MOUNTABLE)

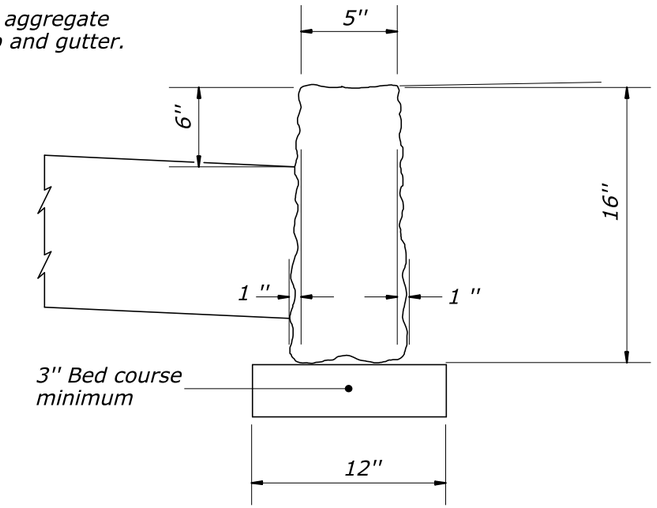

STONE CURB

16-INCH DEPTH
(NON-MOUNTABLE)

PORTLAND CEMENT CONCRETE CURB

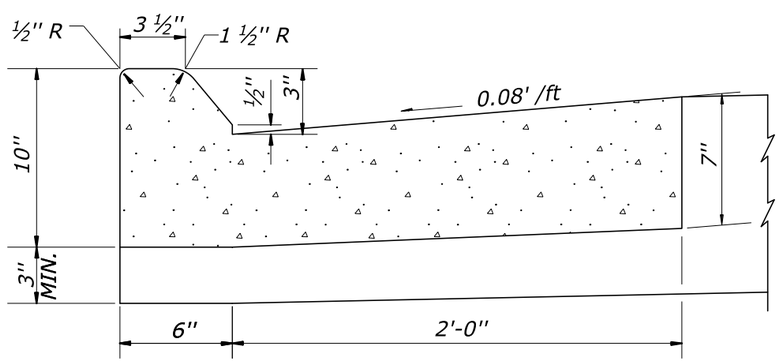

10-INCH DEPTH
(MOUNTABLE)

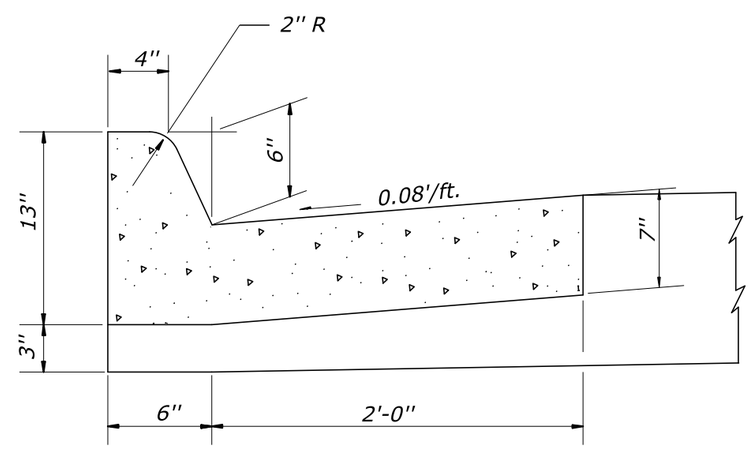

13-INCH DEPTH
(NON- MOUNTABLE)

PORTLAND CEMENT CONCRETE CURB AND GUTTER

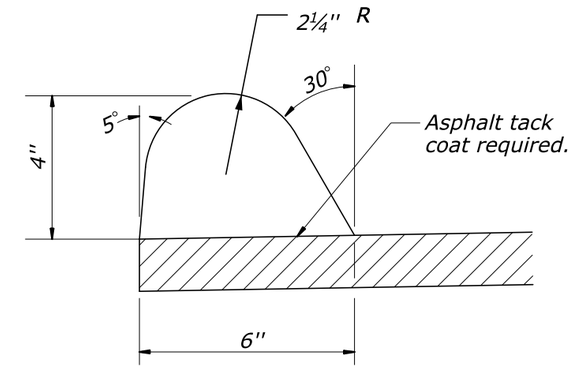

ASPHALT CONCRETE CURB

4-INCH DEPTH
(NON-MOUNTABLE)

Asphalt tack coat may be rapid curing liquid asphalt or emulsified asphalt.

NO SCALE

U.S. DEPARTMENT OF TRANSPORTATION
FEDERAL HIGHWAY ADMINISTRATION
EASTERN FEDERAL LANDS HIGHWAY DIVISION
STERLING, VIRGINIA

BLUE RIDGE PARKWAY

CURBS

10-Dec-2018 01:09 PM M:\PROJECTS_STATE_DOT\NC\blri-126_repo\Proj_Dev\CADD-From_Eng_Support\As_Requested_3_2017\009-st6090i_detail.dgn

STATE	PROJECT	SHEET NUMBER
NC	BLRI OVER I-26	D10

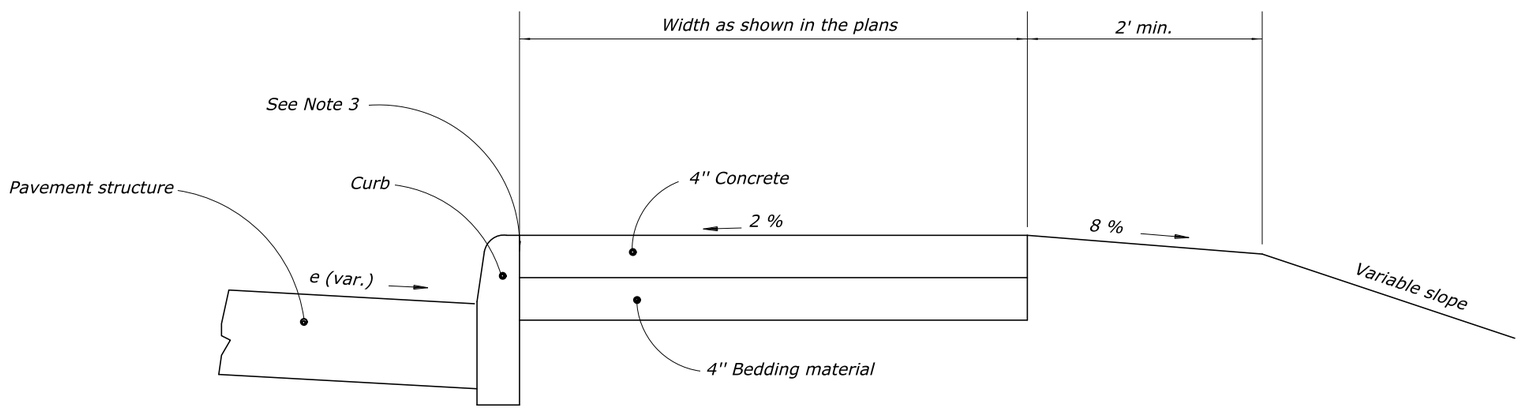

SIDEWALK WITH CURB

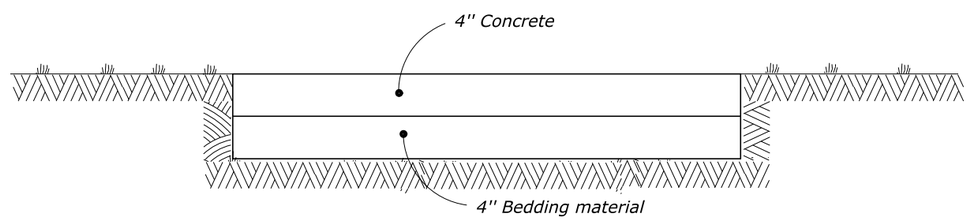

SIDEWALK

NOTES:

1. Place ¾-inch transverse expansion joints at intervals of not more than 20 feet to match adjacent curb expansion.
2. Place contraction joints at intervals equal to the width of the sidewalk as shown in the plans.
3. Install preformed expansion joint filler conforming to Article 1028-1.

NO SCALE

U.S. DEPARTMENT OF TRANSPORTATION
FEDERAL HIGHWAY ADMINISTRATION
EASTERN FEDERAL LANDS HIGHWAY DIVISION
STERLING, VIRGINIA

BLUE RIDGE PARKWAY

CONCRETE SIDEWALK DETAIL

10-Dec-2018 01:21 PM M:\PROJECTS_STATE_DOT\NC\blri_i26_nepo\Proj_Dev\CADD\From_Eng_Support\As_Requested_3_2017\D10-st6150l_detail.dgn

STATE	PROJECT	SHEET NUMBER
NC	BLRI OVER I-26	D11

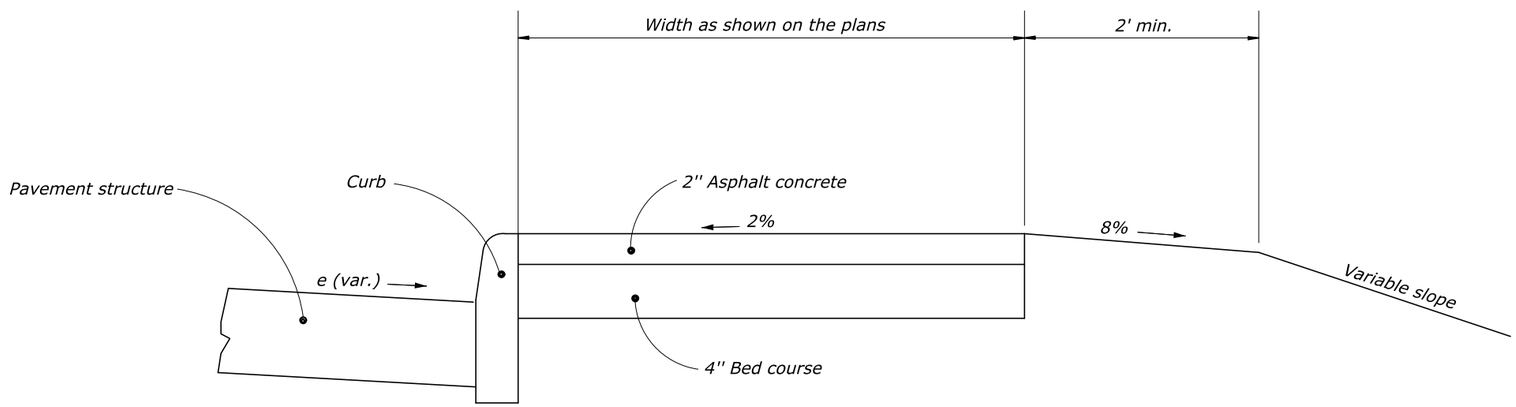

SIDEWALK WITH CURB

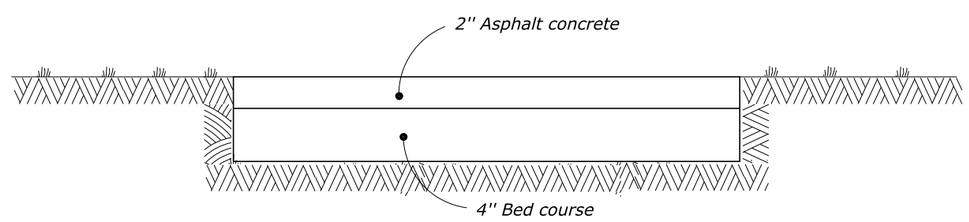

SIDEWALK

NO SCALE

U.S. DEPARTMENT OF TRANSPORTATION
FEDERAL HIGHWAY ADMINISTRATION
EASTERN FEDERAL LANDS HIGHWAY DIVISION
STERLING, VIRGINIA

BLUE RIDGE PARKWAY

ASPHALT CONCRETE SIDEWALK

10-Dec-2018 01:22 PM M:\PROJECTS_STATE_DOT\NC\blri_126_nepo\Proj_Dev\CADD\From_Eng_Support\As_Requested_3_2017\Dli:sf6i502_detail.dgn

STATE	PROJECT	SHEET NUMBER
NC	BLRI OVER I-26	D12

NOTES:

1. *The maximum cross slopes of ramps must not exceed 2% in any direction.*
2. *Use a coarse broom finish running perpendicular to the slope to create a slip resistant surface on concrete ramp surfaces, exclusive of the detectable warning fields.*
3. *Construct ramp transitions between walks, gutters, or streets that are flush and free of abrupt vertical changes not to exceed 2.5 inches.*
4. *Locate drainage inlets and manholes outside of ramp walking surfaces or landings.*

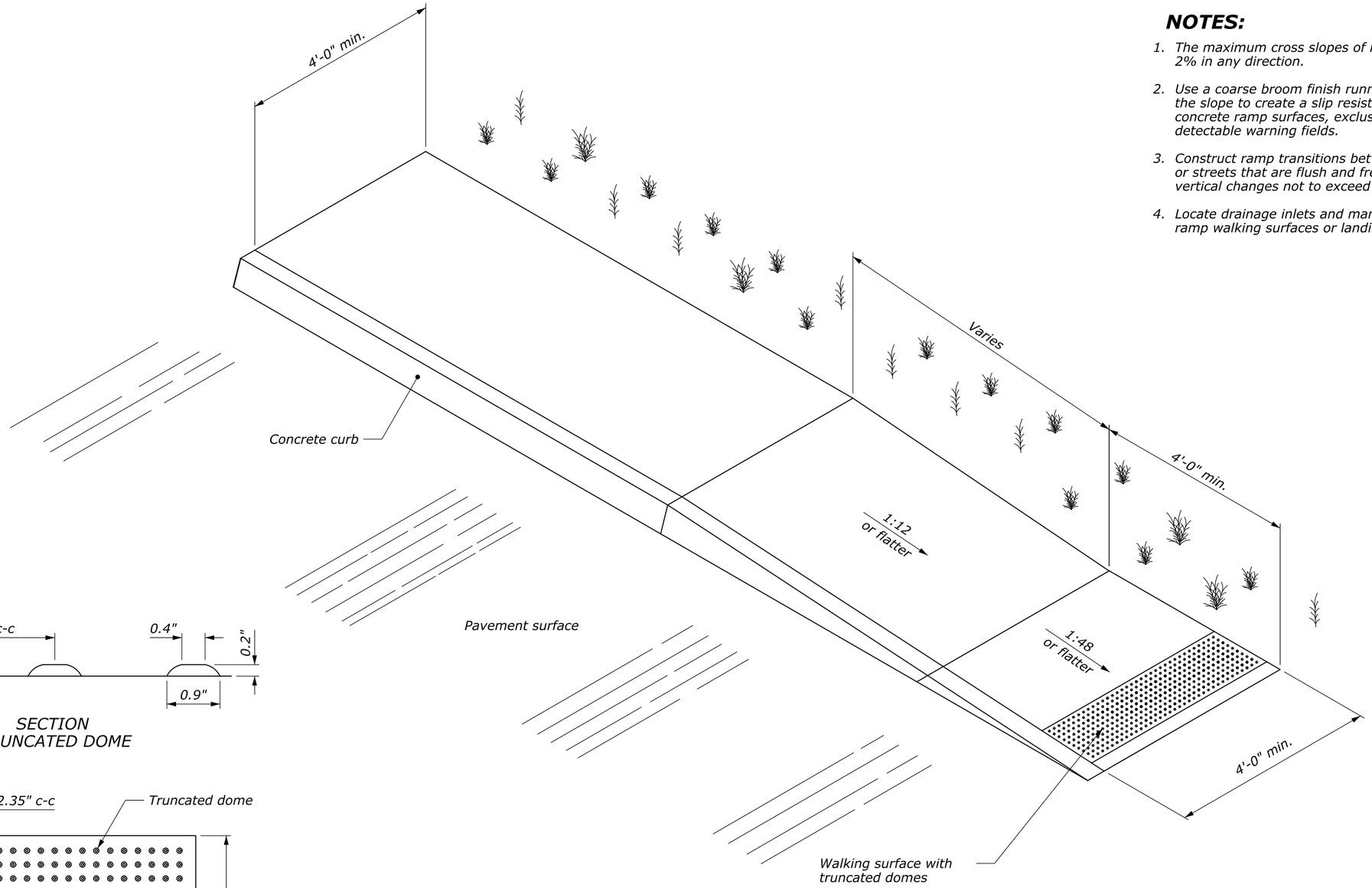

PARALLEL CURB RAMP

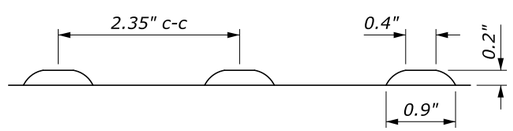

SECTION
TRUNCATED DOME

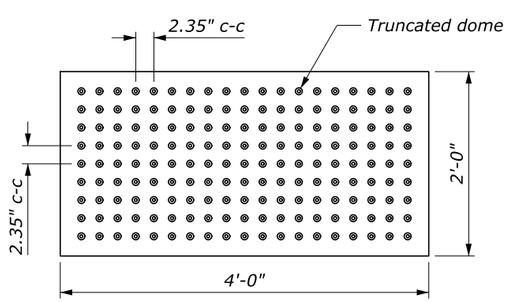

PLAN

DETECTABLE WARNING FIELD WITH TRUNCATED DOMES

U.S. DEPARTMENT OF TRANSPORTATION
FEDERAL HIGHWAY ADMINISTRATION
EASTERN FEDERAL LANDS HIGHWAY DIVISION
STERLING, VIRGINIA

BLUE RIDGE PARKWAY

CONCRETE CURB RAMP (WHEELCHAIR RAMP CURB TAPER)

10-Dec-2018 01:24 PM M:\PROJECTS_STATE_DOT\NC\blri_i26_repo\Proj_Dev\CADD\From_Eng_Support\As_Requested_3_2017\D12-st6i502.dgn

STATE	PROJECT	SHEET NUMBER
NC	BLRI OVER I-26	D13

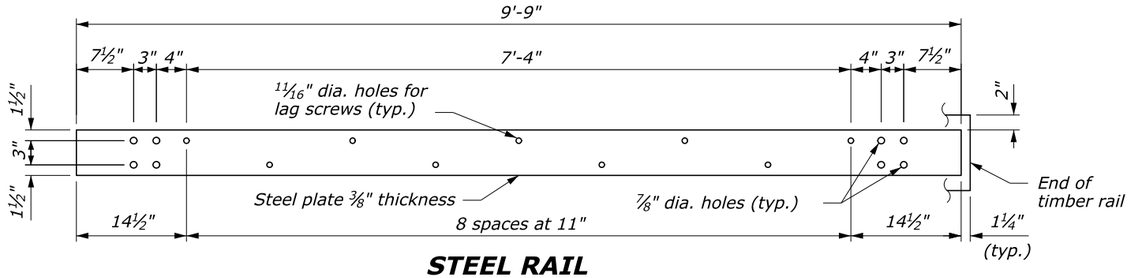

STEEL RAIL

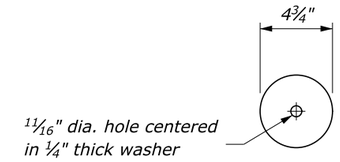

PLATE WASHER

NOTES:

1. Use the Type A, blocked-out, system or the Type B, non-blocked-out, system as specified in the plans.
2. Use weathering steel for all structural steel and fastener hardware as specified.
3. Place guardrail terminal, Type SBT terminal section on both approaches and trailing ends of barrier installations.

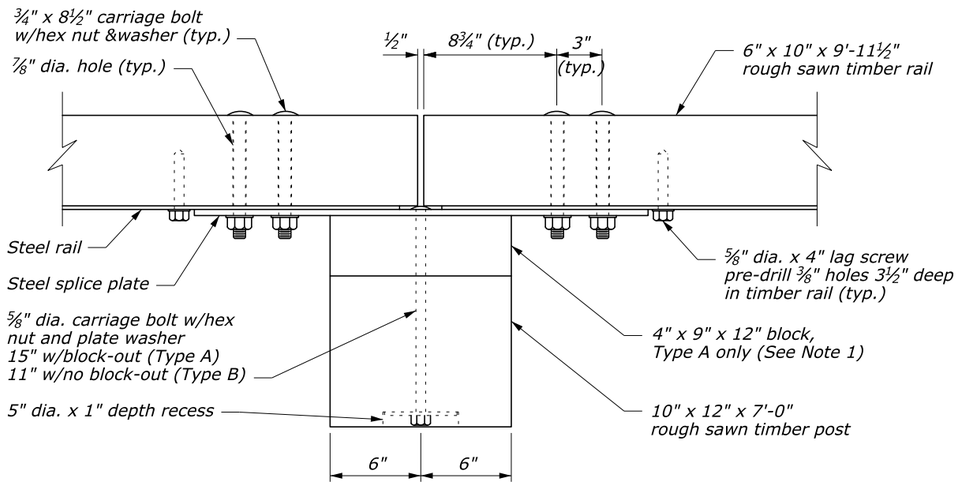

PLAN

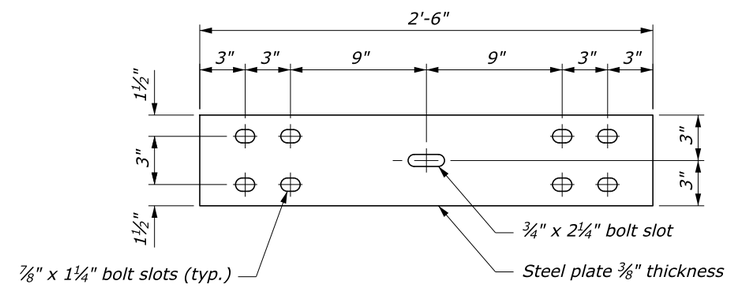

STEEL SPLICE PLATE

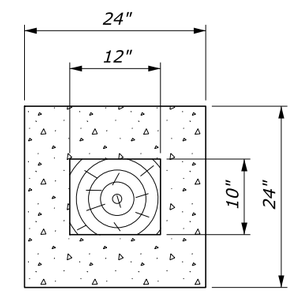

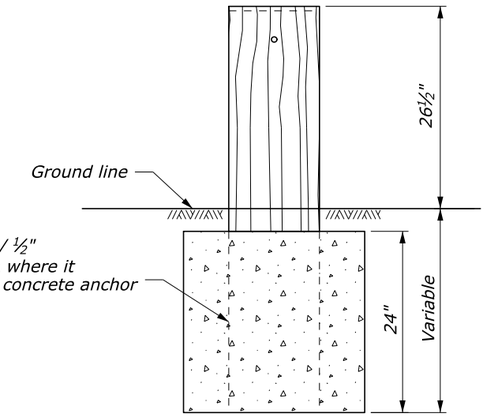

24" dia. round anchor is an acceptable alternative.
Reduced size acceptable in solid rock.

CONCRETE ANCHOR FOR SHORT GUARDRAIL POST

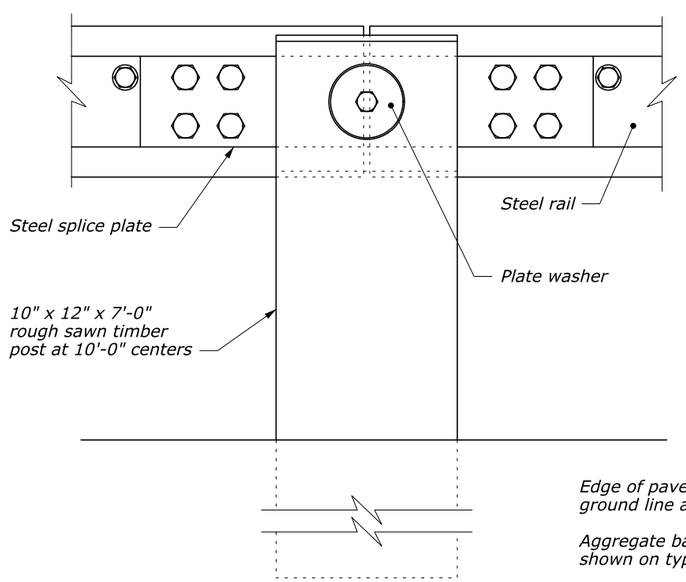

ELEVATION

POST CONNECTION

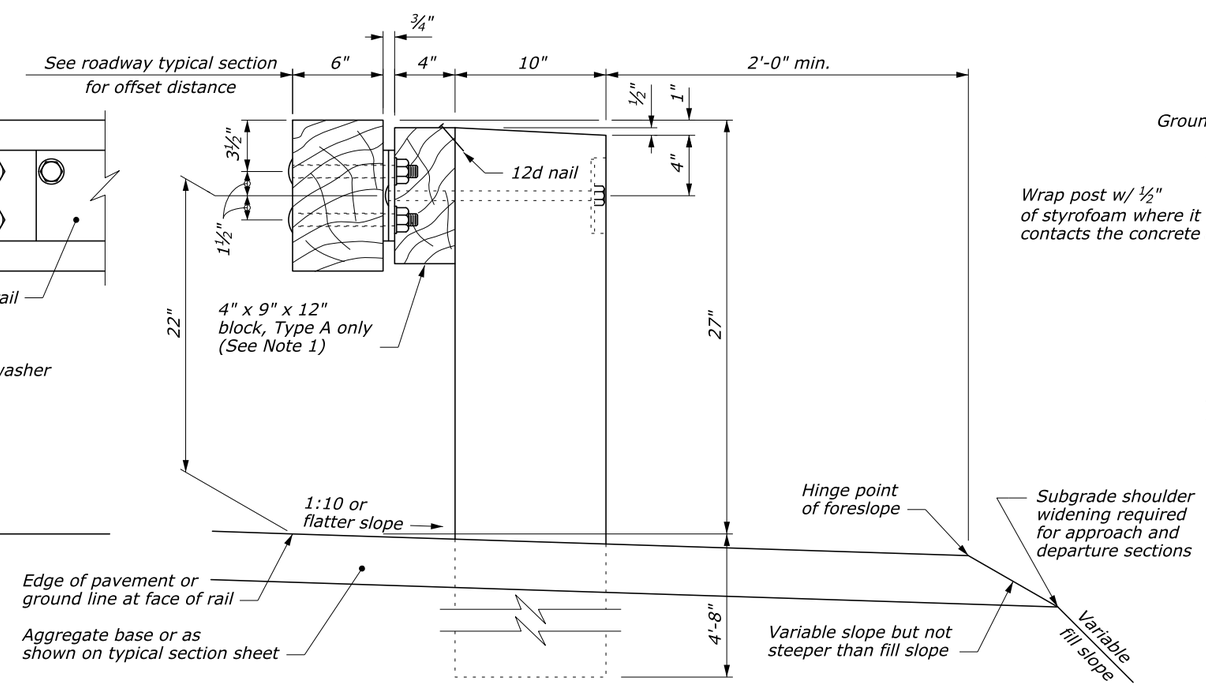

TYPICAL GUARDRAIL CROSS SECTION

U.S. DEPARTMENT OF TRANSPORTATION
FEDERAL HIGHWAY ADMINISTRATION
EASTERN FEDERAL LANDS HIGHWAY DIVISION
STERLING, VIRGINIA

BLUE RIDGE PARKWAY

STEEL-BACKED TIMBER GUARDRAIL TYPE A & TYPE B

10-Dec-2018 01:25 PM M:\PROJECTS_STATE_DOT\NC\blri_i26_repo\Proj_Dev\CADD\From_Eng_Support\As_Requested_3_2017\D13-sf6i760.dgn

STATE	PROJECT	SHEET NUMBER
NC	BLRI OVER I-26	D14

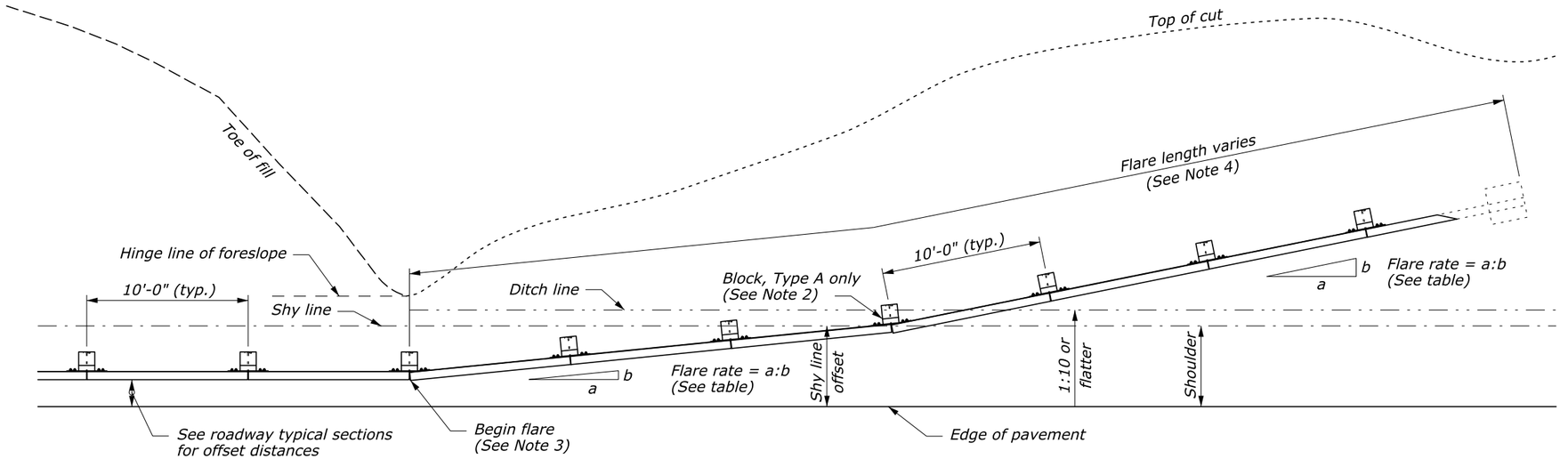

PLAN

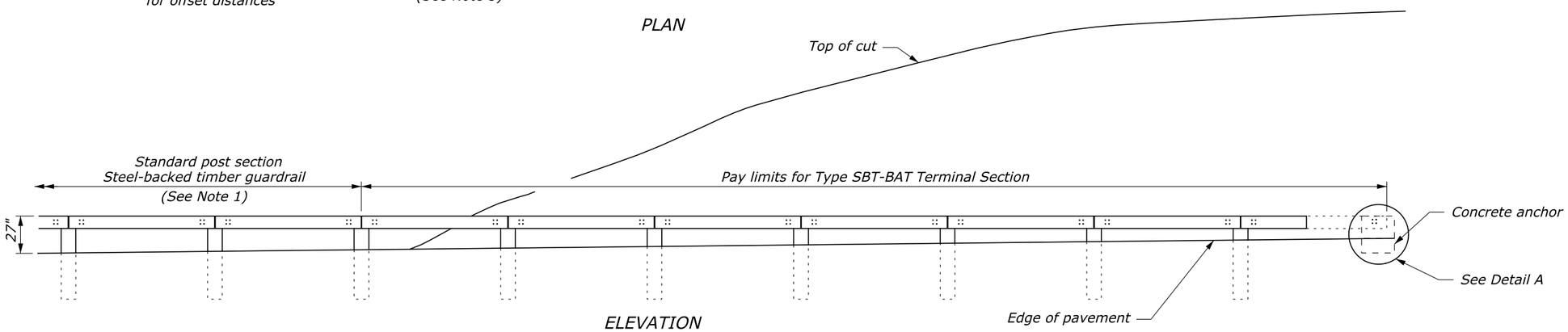

ELEVATION

APPROACH & DEPARTURE FLARE WITH BACK SLOPE ANCHOR TERMINAL (BAT)

NOTE:

1. See Standard 617-60, SBTA and SBTB for timber, structural steel, and hardware details.
2. On the Type A, blocked-out guardrail, include the blocks in the terminal section, except on the concrete anchor. For the Type B, non-blocked-out guardrail, no blocks are included.
3. Begin the cut flares at the nearest post to a transition point between fill and cut as directed by the CO.
4. Extend the flare into the cut until a minimum 1-foot cover is obtained over the guardrail end.

GUARDRAIL FLARE RATE TABLE

Design Speed (mph)	Shy line offset (ft)	Flare rate inside shy line (a:b)	Flare rate outside shy line (a:b)
60	8.0	26:1	14:1
50	6.5	21:1	11:1
40	5.0	16:1	8:1
30 and less	3.5	13:1	7:1

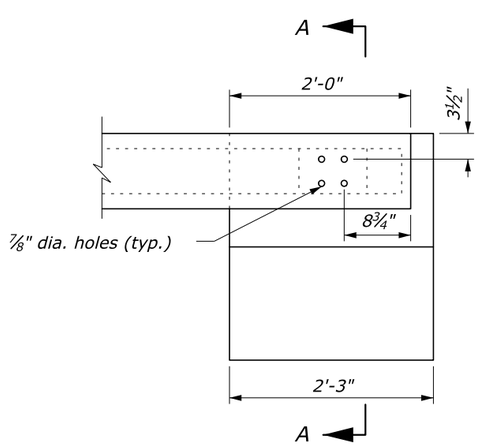

DETAIL A

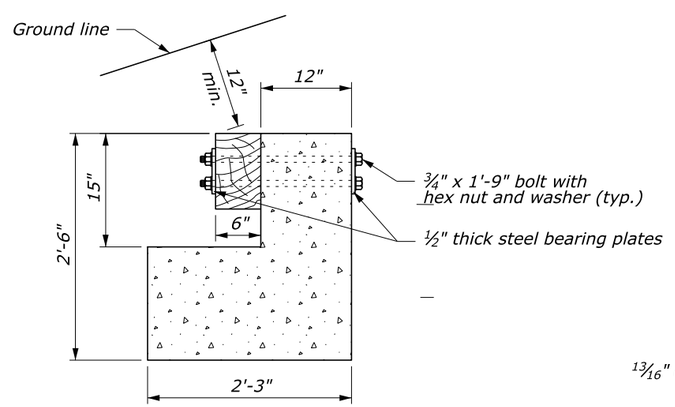

SECTION A-A

CONCRETE ANCHOR

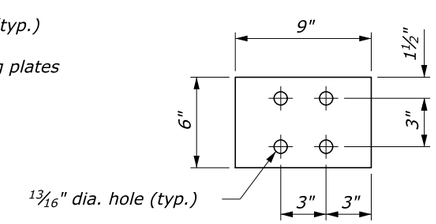

STEEL BEARING PLATE

U.S. DEPARTMENT OF TRANSPORTATION
FEDERAL HIGHWAY ADMINISTRATION
EASTERN FEDERAL LANDS HIGHWAY DIVISION
STERLING, VIRGINIA

BLUE RIDGE PARKWAY

STEEL-BACKED TIMBER GUARDRAIL TERMINAL SECTION TYPE SBT-BAT

10-Dec-2018 03:48 PM \\V-PROJECTS_STATE_DOT\NC\blr1_I26_repair\Proj_Dev\CADD-From_Eng_Support\As_Requested_3_2017\D14-sht67622.dgn

STATE	PROJECT	SHEET NUMBER
NC	BLRI OVER I-26	D15

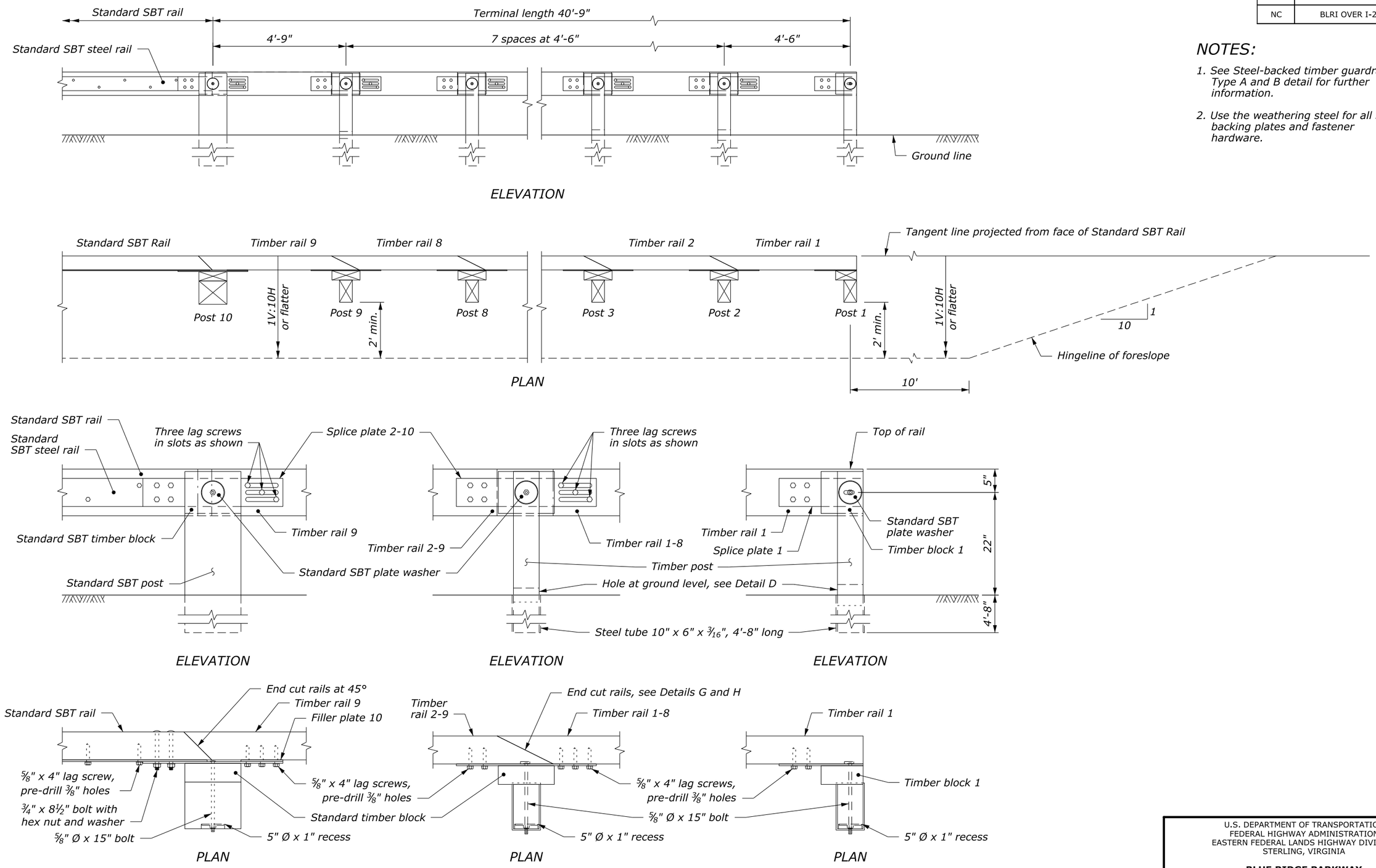

NOTES:

1. See Steel-backed timber guardrail Type A and B detail for further information.
2. Use the weathering steel for all steel backing plates and fastener hardware.

POST/RAIL CONNECTION AT POST 10
DETAIL A

POST/RAIL CONNECTION AT POSTS 2-9
DETAIL B

POST/RAIL CONNECTION AT POST 1
DETAIL C

NO SCALE

U.S. DEPARTMENT OF TRANSPORTATION
FEDERAL HIGHWAY ADMINISTRATION
EASTERN FEDERAL LANDS HIGHWAY DIVISION
STERLING, VIRGINIA

BLUE RIDGE PARKWAY

GUARDRAIL TERMINAL, TYPE SBT TANGENT
Sheet 1 of 2

M:\PROJECTS_STATE_DOT\NC\blri_i26_nepa\Proj_Dev\CADD\From_Eng_Support\As_Requested_3_2017\D15D16-S16I769_EFL_TEMP.dgn
10-Dec-2018 03:20 PM

STATE	PROJECT	SHEET NUMBER
NC	BLRI OVER I-26	D16

NOTE:

Use the weathering steel for all steel backing plates and fastener hardware.

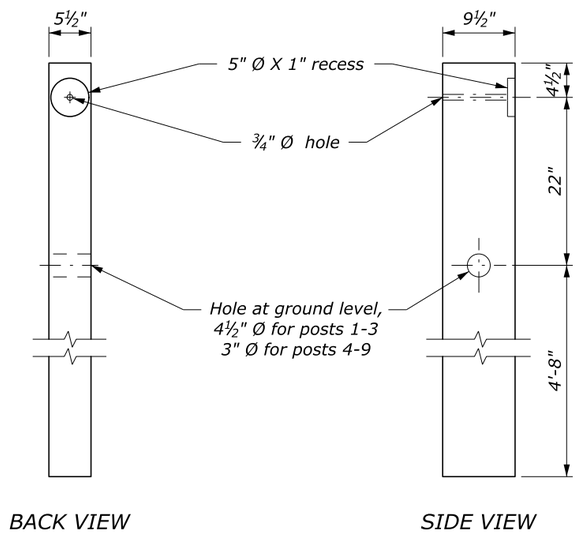

TIMBER POSTS 1 - 9
DETAIL D

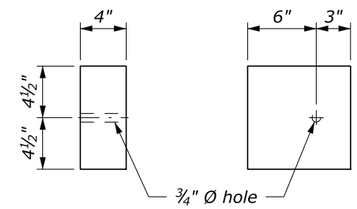

TIMBER BLOCK 1
DETAIL E

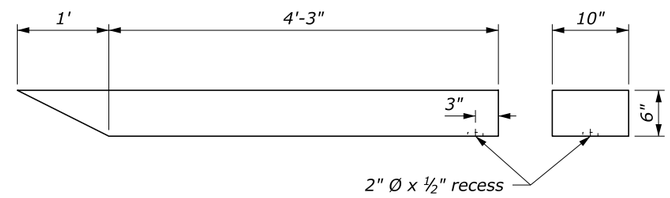

TIMBER RAIL 1
DETAIL F

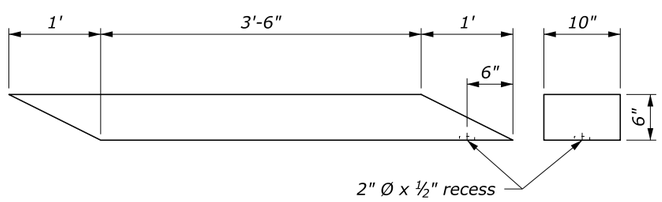

TIMBER RAILS 2-8
DETAIL G

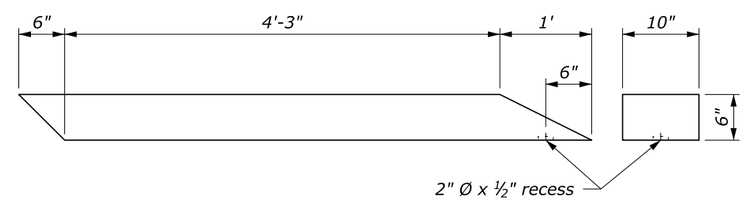

TIMBER RAIL 9
DETAIL H

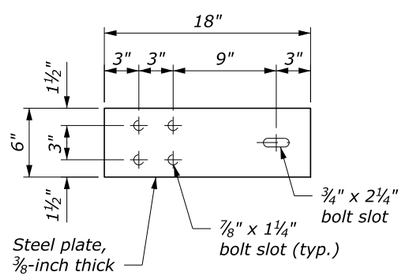

SPLICE PLATE 1
DETAIL I

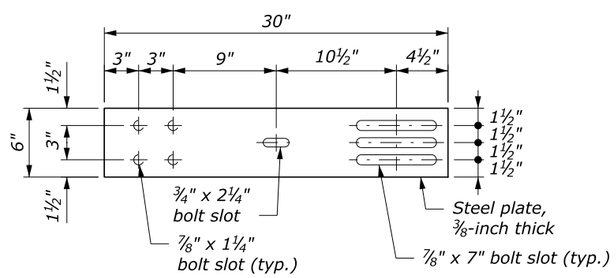

SPLICE PLATE 2-10
DETAIL J

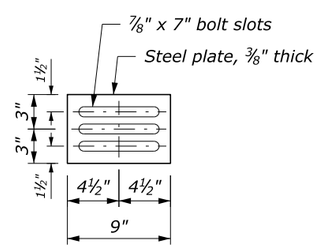

FILLER PLATE 10
DETAIL K

NO SCALE

U.S. DEPARTMENT OF TRANSPORTATION
FEDERAL HIGHWAY ADMINISTRATION
EASTERN FEDERAL LANDS HIGHWAY DIVISION
STERLING, VIRGINIA

BLUE RIDGE PARKWAY

GUARDRAIL TERMINAL, TYPE SBT TANGENT
Sheet 2 of 2

10-Dec-2018 03:19 PM M:\PROJECTS_STATE_DOT\NC\blri_i26_repo\Proj_Dev\CADD\From_Eng_Support\As_Requested_3_2017\D16-S16\769_EFL_TEMP.dgn

STATE	PROJECT	SHEET NUMBER
NC	BLRI OVER I-26	D17

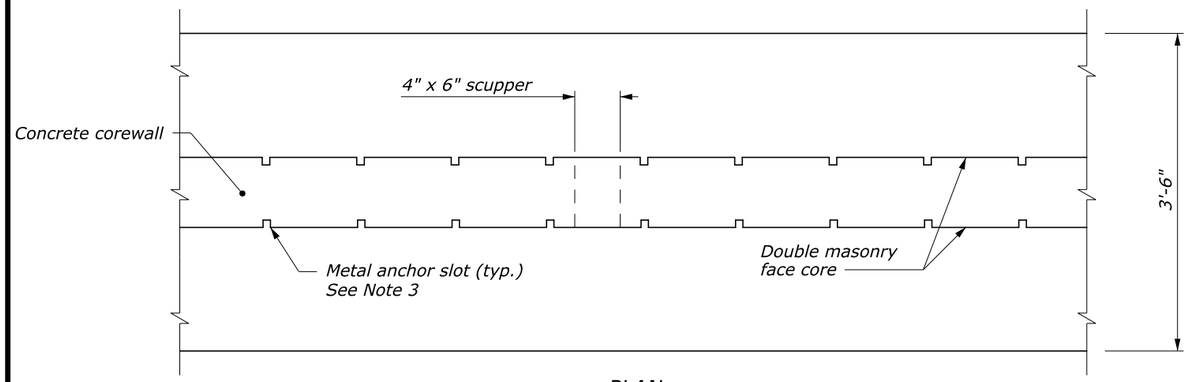

PLAN

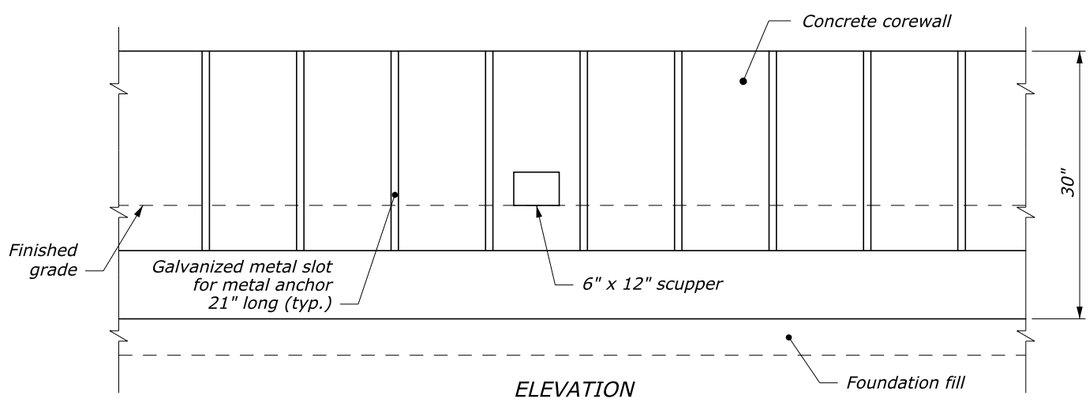

ELEVATION

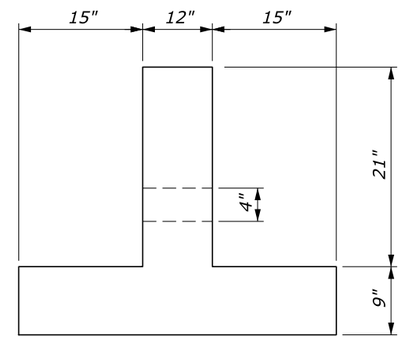

END VIEW

PRECAST CONCRETE COREWALL

NOTES:

1. Form contraction joints in the corewall at 20' intervals.
2. The depth of foundation fill may be less than 6" as directed by by the Engineer, when the foundation is on either rock fill or solid rock.
3. Set galvanized metal slots with anchors for the stone work on 2' spacing. Use 16 gage galvanized 1" x 5-1/2" metal anchors. Equivalent attachment systems are allowed with the approval of the Engineer.
4. Kerf (sawcut) the capstones placed on top of the barrier to allow for their placement over the steel angle.
5. Construct masonry faces with Class B masonry according to Special Provision SP08-R877, Stone Masonry.
6. Flare guardwall ends outside the clear zone according to the Roadside Design Guide.
7. Install metal anchor for concrete placed before stone according to Special Provision SP08-R877, Stone Masonry.
8. Add scuppers for roadway drainage as directed by the Engineer.
9. Top angle of z-clip to engage a recess cut in stone.

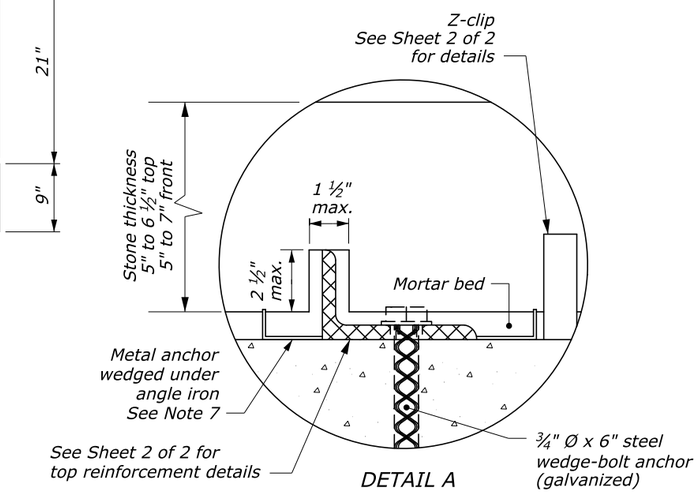

DETAIL A

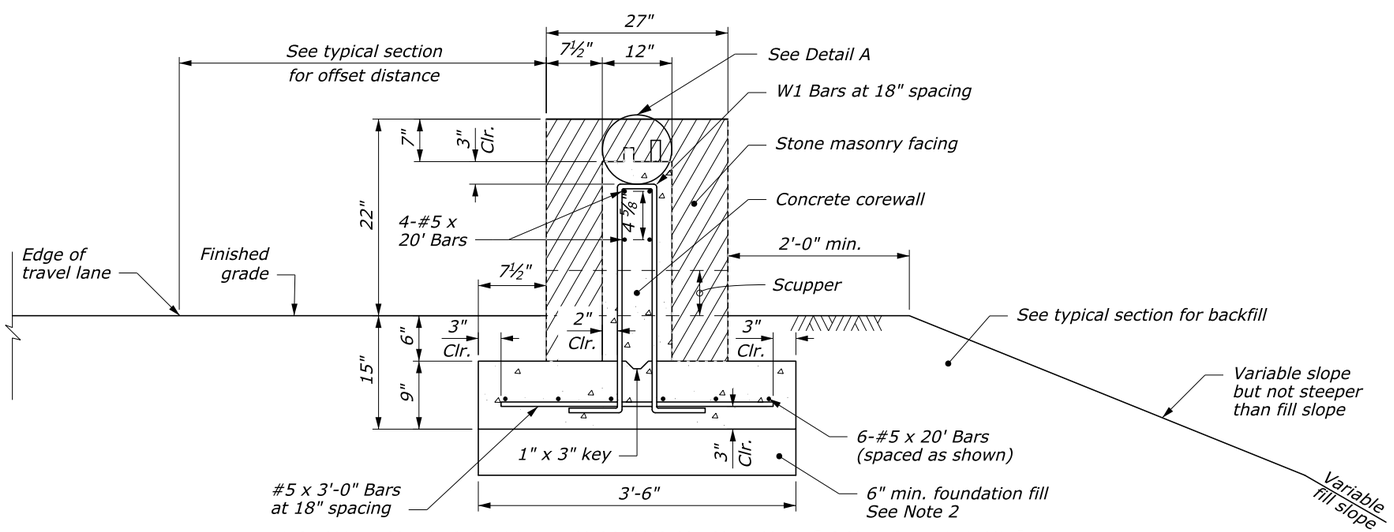

TYPICAL GUARDWALL CROSS SECTION (DOUBLE FACE)

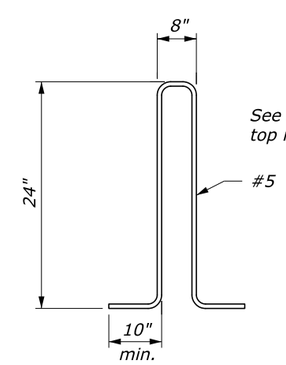

W1 BAR
BENDING DIAGRAM

NO SCALE

U.S. DEPARTMENT OF TRANSPORTATION
FEDERAL HIGHWAY ADMINISTRATION
EASTERN FEDERAL LANDS HIGHWAY DIVISION
STERLING, VIRGINIA

BLUE RIDGE PARKWAY

TL-2 STONE MASONRY GUARDWALL (DOUBLE FACE)

Sheet 1 of 2

10-Dec-2018 03:21 PM M:\PROJECTS_STATE_DOT\NC\blri_i26_nepa\Proj_Dev\CADD\From_Eng_Support\As_Requested_3_2017\D17_sf62050A_detail.dgn

STATE	PROJECT	SHEET NUMBER
NC	BLRI OVER I-26	D18

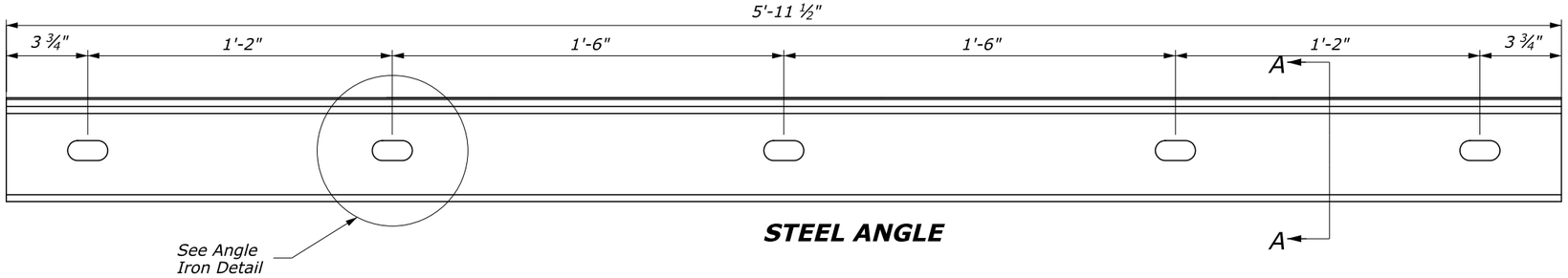

STEEL ANGLE

NOTES:

1. Angles are used to provide lateral shear resistance for the stone masonry placed on top of the inner core wall.
2. Spacing between all angles is approximately ½".
3. Install metal anchors for concrete placed before stone according to Special Provision SP08-R877, Stone Masonry.

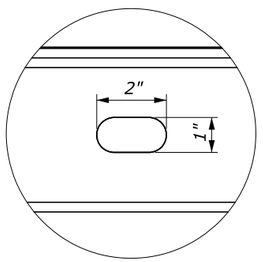

ANGLE IRON DETAIL

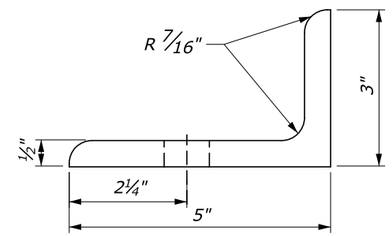

SECTION A-A
L5 x 3 x ½ - ASTM A36
Galvanize after fabrication

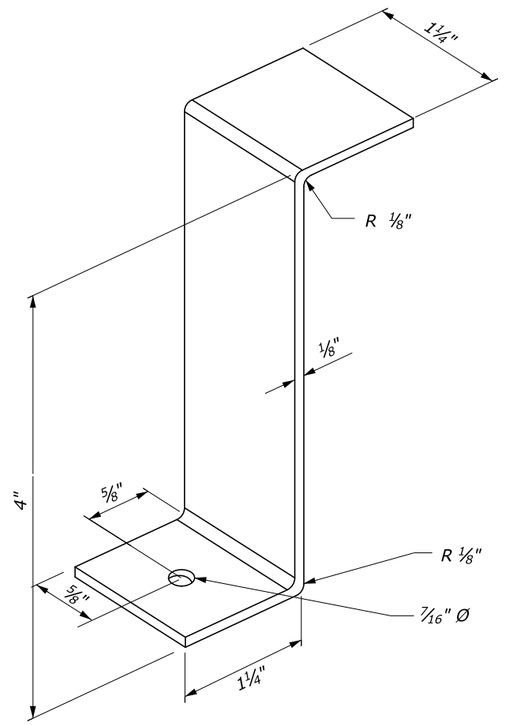

ASTM A304 STAINLESS STEEL Z-CLIP

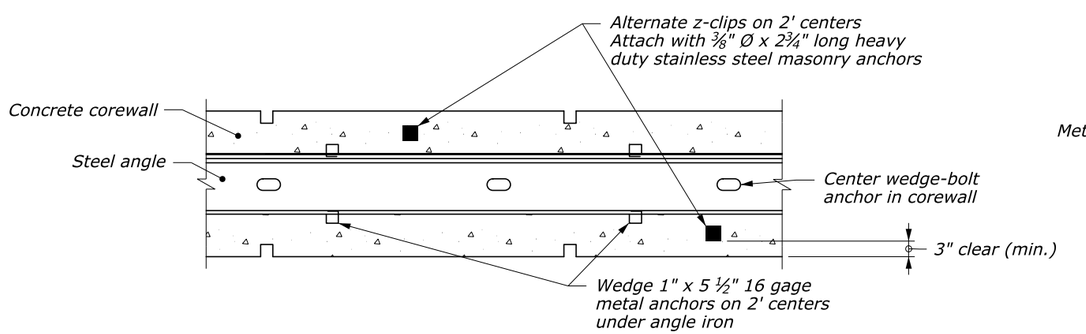

TOP REINFORCEMENT DETAIL

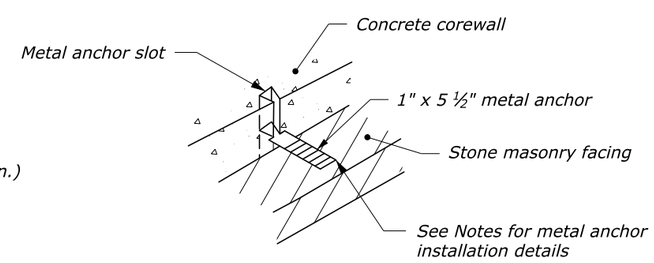

METAL ANCHOR DETAIL

NO SCALE

U.S. DEPARTMENT OF TRANSPORTATION
FEDERAL HIGHWAY ADMINISTRATION
EASTERN FEDERAL LANDS HIGHWAY DIVISION
STERLING, VIRGINIA

BLUE RIDGE PARKWAY

TL-2 STONE MASONRY GUARDWALL (DOUBLE FACE)

10-Dec-2018 03:22 PM M:\PROJECTS_STATE_DOT\NC\blri_I26_repo\Proj_Dev\CADD\From_Eng_Support\As_Requested_3_2017\D17-sfe20504_detail.dgn

STATE	PROJECT	SHEET NUMBER
NC	BLRI OVER I-26	D19

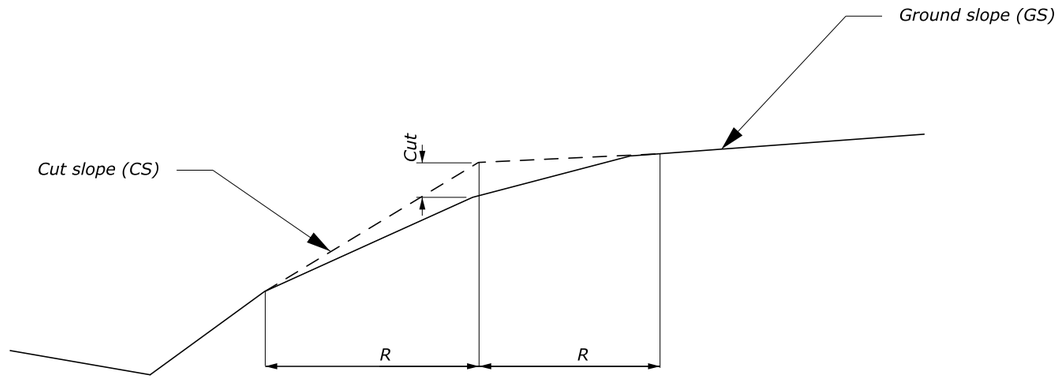

R = 20 (1/CS ± 1/GS)

Cut = R^2/ 80 or from Table

Note: Use plus for minus ground slope and vice versa

R [ft]	Cut [ft]
4	0.2
5	0.3
6	0.5
7	0.6
8	0.8
9	1.0
10	1.3
11	1.5
12	1.8
13	2.1
14	2.5
15	2.8
16	3.2
17	3.6
18	4.1
19	4.5
20 (max)	5.0

Example:

Cut slope 2:1
Ground slope 10:1 (plus)

*R = 20 (1/2 -1/10) = 20*0.4 = 8 ft*

Cut = 0.8 ft from table or r^2/80 =64/80= 0.8ft

U.S. DEPARTMENT OF TRANSPORTATION
FEDERAL HIGHWAY ADMINISTRATION
EASTERN FEDERAL LANDS HIGHWAY DIVISION
STERLING, VIRGINIA

BLUE RIDGE PARKWAY

SLOPE ROUNDING FOR PARKWAY SECTIONS

10-Dec-2018 03:31 PM MA:\PROJECTS_STATE_DOT\NC\blr1_I26_nepa\Proj_Dev\CADD\From_Eng_Support\As_Requested_3_2017\D18-NPS_SlopeRoundIng.dgn

STATE	PROJECT	SHEET NUMBER
NC	BLRI OVER I-26	D20

NOTES:

1. See plans for guardwall locations.
2. The top of the wall is measures from the arris line.
3. Match taper rate guardwall on the opposite side of the roads.

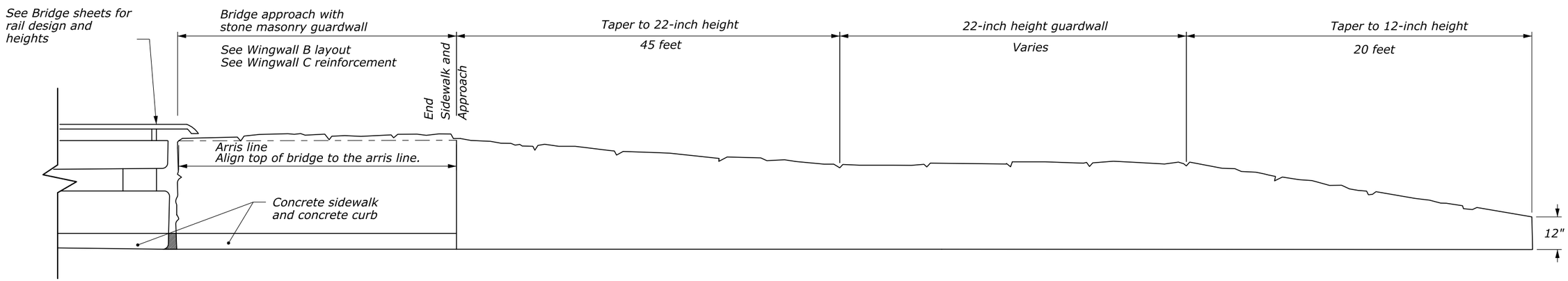

U.S. DEPARTMENT OF TRANSPORTATION
FEDERAL HIGHWAY ADMINISTRATION
EASTERN FEDERAL LANDS HIGHWAY DIVISION
STERLING, VIRGINIA

BLUE RIDGE PARKWAY

RAIL TRANSITION

21-Dec-2018 08:22 AM M:\PROJECTS_STATE_DOT\NC\blrl_126_repo\Proj_Dev\CADD\From_Eng_Support\As_Requested_3_20\D20-RailTransition.dgn

STATE	PROJECT	SHEET NUMBER
NC	BLRI OVER I-26	E01

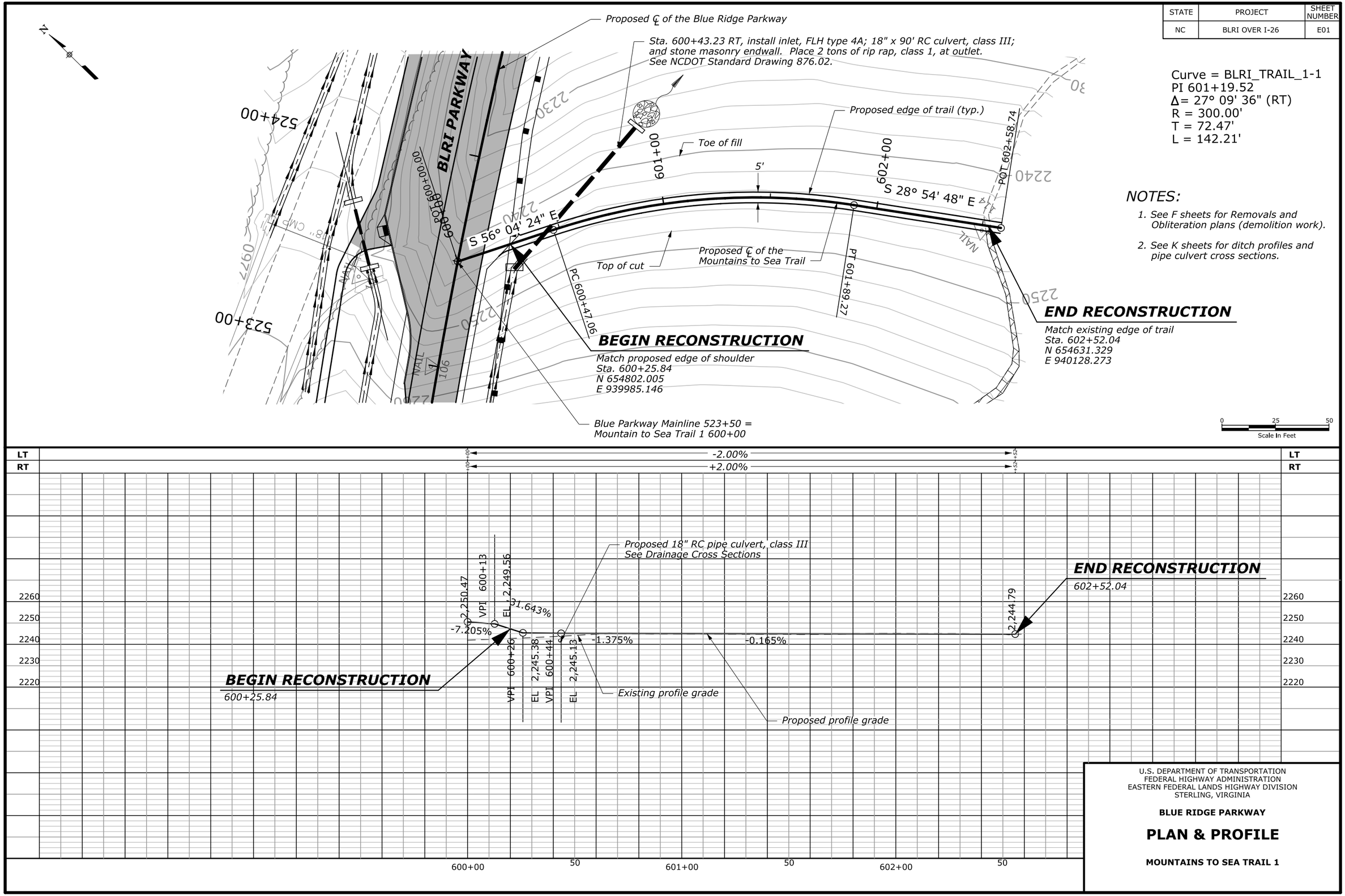

Curve = BLRI_TRAIL_1-1
PI 601+19.52
Δ= 27° 09' 36" (RT)
R = 300.00'
T = 72.47'
L = 142.21'

NOTES:

1. See F sheets for Removals and Obliteration plans (demolition work).
2. See K sheets for ditch profiles and pipe culvert cross sections.

U.S. DEPARTMENT OF TRANSPORTATION
FEDERAL HIGHWAY ADMINISTRATION
EASTERN FEDERAL LANDS HIGHWAY DIVISION
STERLING, VIRGINIA

BLUE RIDGE PARKWAY

PLAN & PROFILE

MOUNTAINS TO SEA TRAIL 1

08-Dec-2018 09:58 PM:\PROJECTS_STATE_DOT\NC\blri_126_nepa\Proj_Dev\CADD\From_Eng_Support\As_Requested_3_2017\E01-E02-BLRI_I_26_south_trail_p&p.dgn

STATE	PROJECT	SHEET NUMBER
NC	BLRI OVER I-26	E02

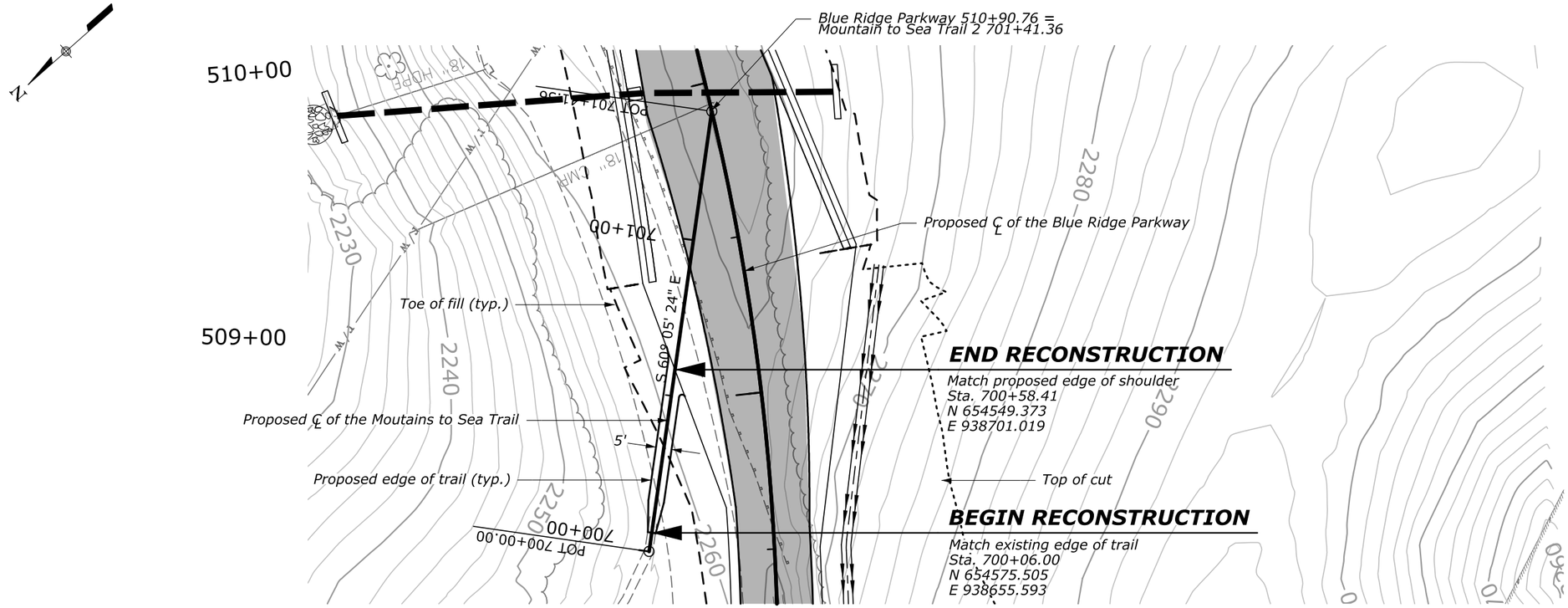

NOTE:

See F sheets for Removals and Obliteration plans (demolition work).

0 25 50
SCALE IN FEET

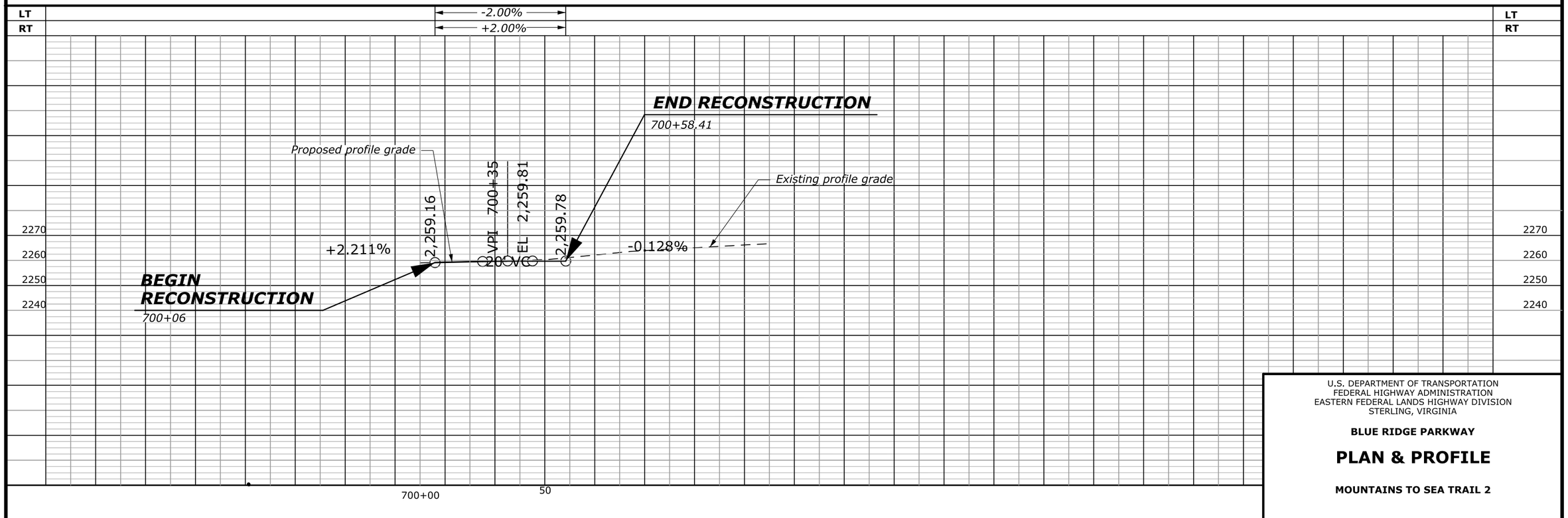

U.S. DEPARTMENT OF TRANSPORTATION
FEDERAL HIGHWAY ADMINISTRATION
EASTERN FEDERAL LANDS HIGHWAY DIVISION
STERLING, VIRGINIA

BLUE RIDGE PARKWAY

PLAN & PROFILE

MOUNTAINS TO SEA TRAIL 2

11-Dec-2018 10:41 AM M:\PROJECTS_STATE_DOT\NC\blri_i26_nepa\Proj_Dev\CAD\vFrom_Eng_Support\As_Requested_3_2017\E01-E02-BLRI_I_26_south_trail_p&p.dgn

STATE	PROJECT	SHEET NUMBER
NC	BLRI OVER I-26	E03

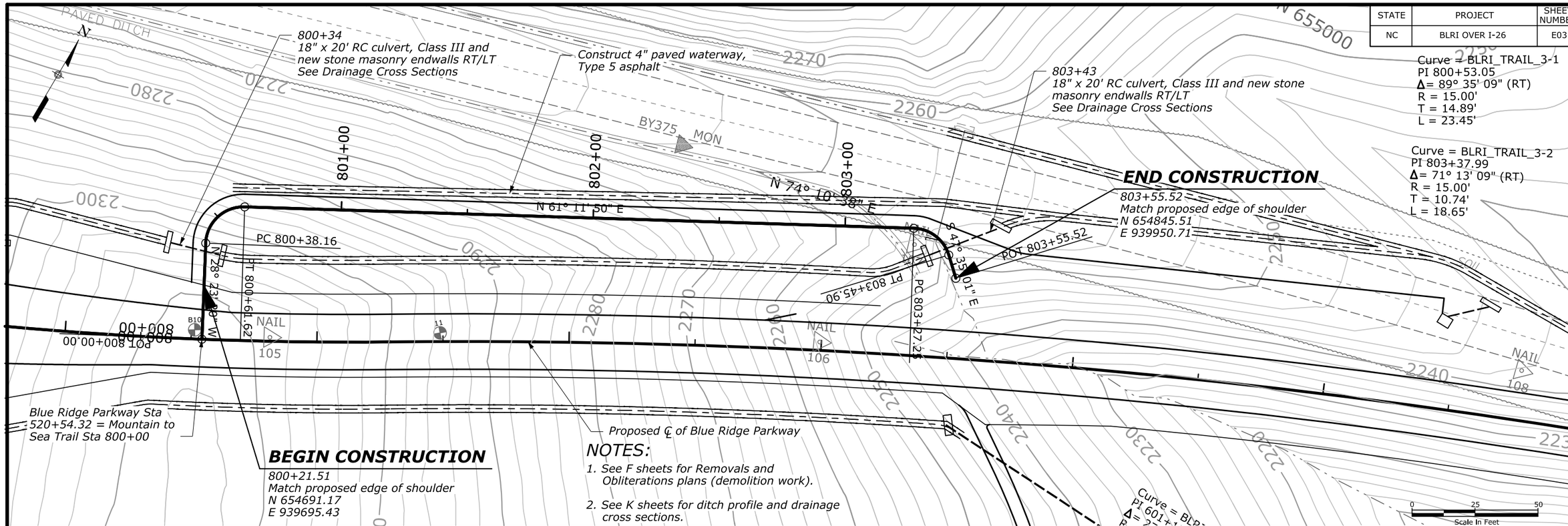

NOTES:

1. See F sheets for Removals and Obliterations plans (demolition work).
2. See K sheets for ditch profile and drainage cross sections.

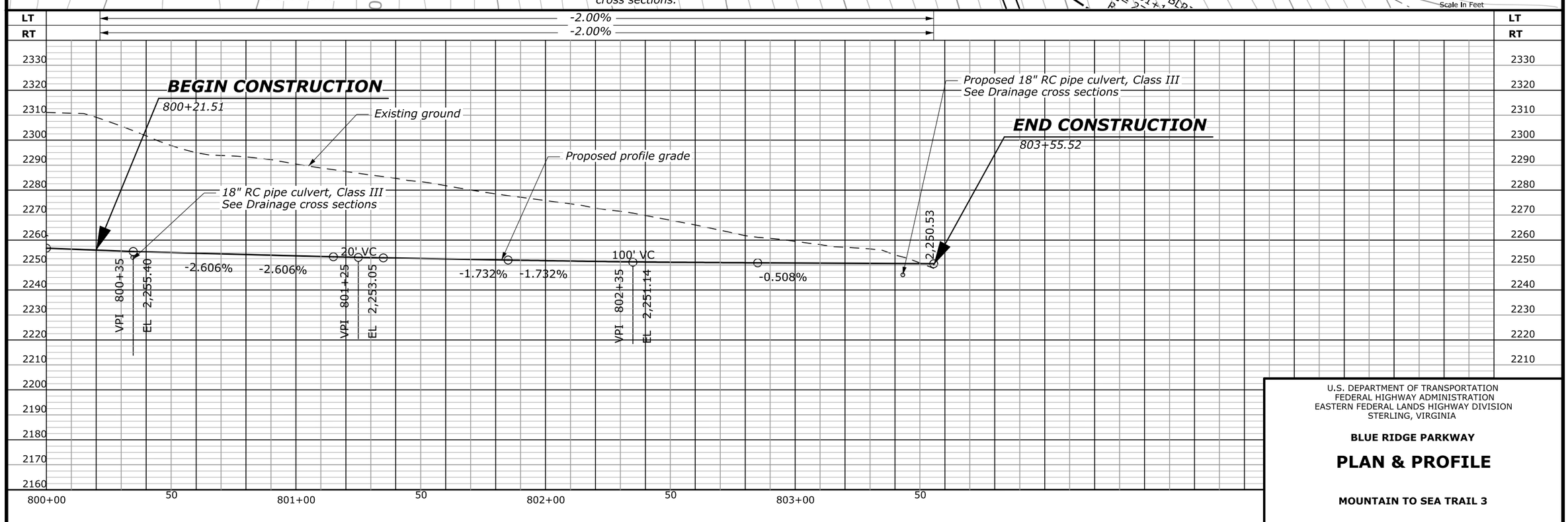

U.S. DEPARTMENT OF TRANSPORTATION
FEDERAL HIGHWAY ADMINISTRATION
EASTERN FEDERAL LANDS HIGHWAY DIVISION
STERLING, VIRGINIA

BLUE RIDGE PARKWAY

PLAN & PROFILE

MOUNTAIN TO SEA TRAIL 3

12-Dec-2018 04:22 AM\\PROJECTS_STATE_DOT\NC\blri_126_nepa\Proj_Dev\CADD\From_Eng_Support\As_Requested_3_2017\E03-BLRI_I_26_north_trail3_p&pdgn

STATE	PROJECT	SHEET NUMBER
NC	BLRI OVER I-26	E04

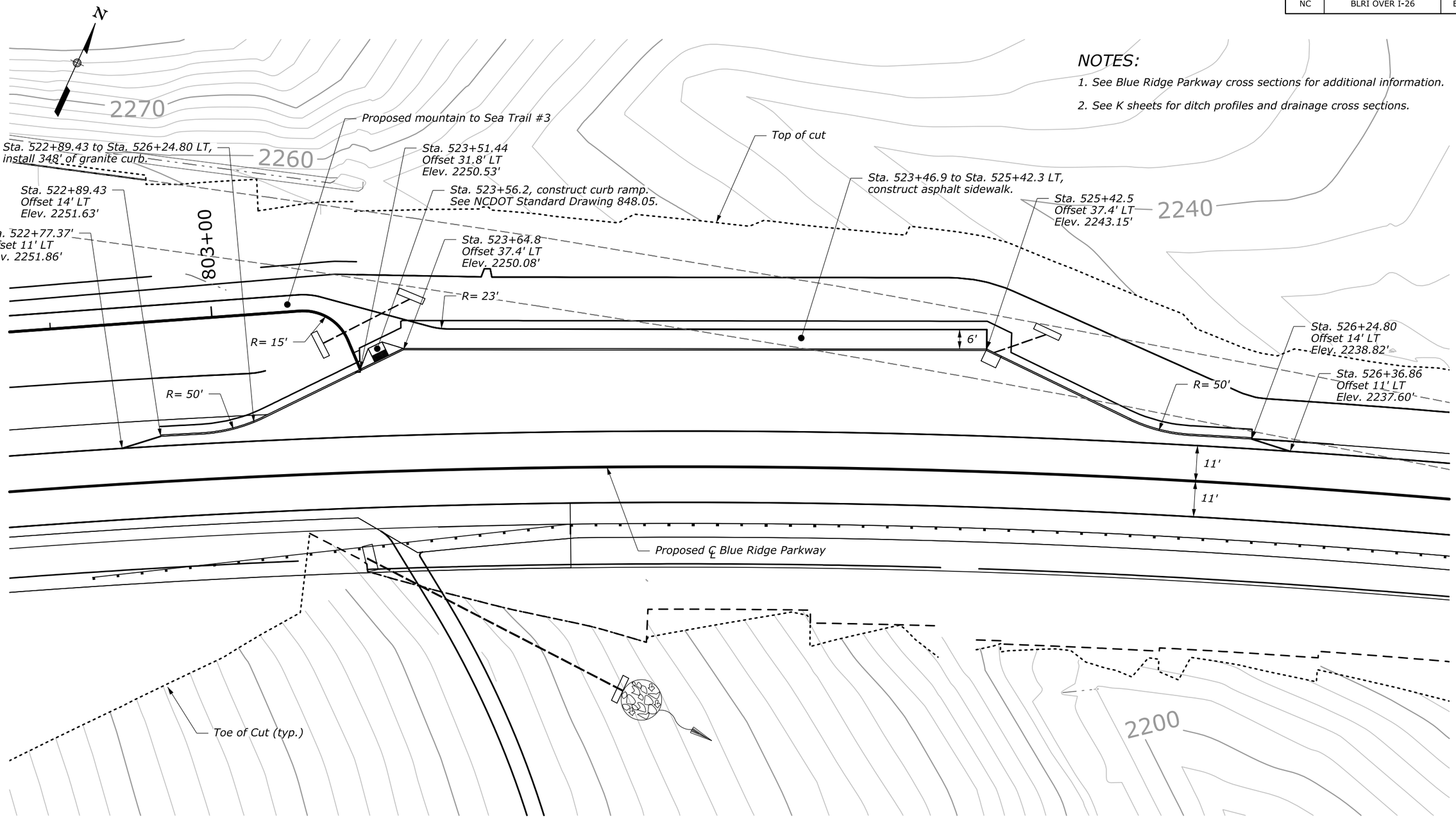

NOTES:

1. See Blue Ridge Parkway cross sections for additional information.
2. See K sheets for ditch profiles and drainage cross sections.

U.S. DEPARTMENT OF TRANSPORTATION
FEDERAL HIGHWAY ADMINISTRATION
EASTERN FEDERAL LANDS HIGHWAY DIVISION
STERLING, VIRGINIA

BLUE RIDGE PARKWAY

PLAN

PARKING AREA LAYOUT

0 15 30
SCALE IN FEET

11-Dec-2018 03:12 PM M:\PROJECTS_STATE_DOT\NC\blri_i26_nepo\Proj_Dev\CADD\From_Eng_Support\As_Requested_3_2017\E04-BLRI_I_26_ParkingAreaa.dgn

STATE	PROJECT	SHEET NUMBER
NC	BLRI OVER I-26	F01

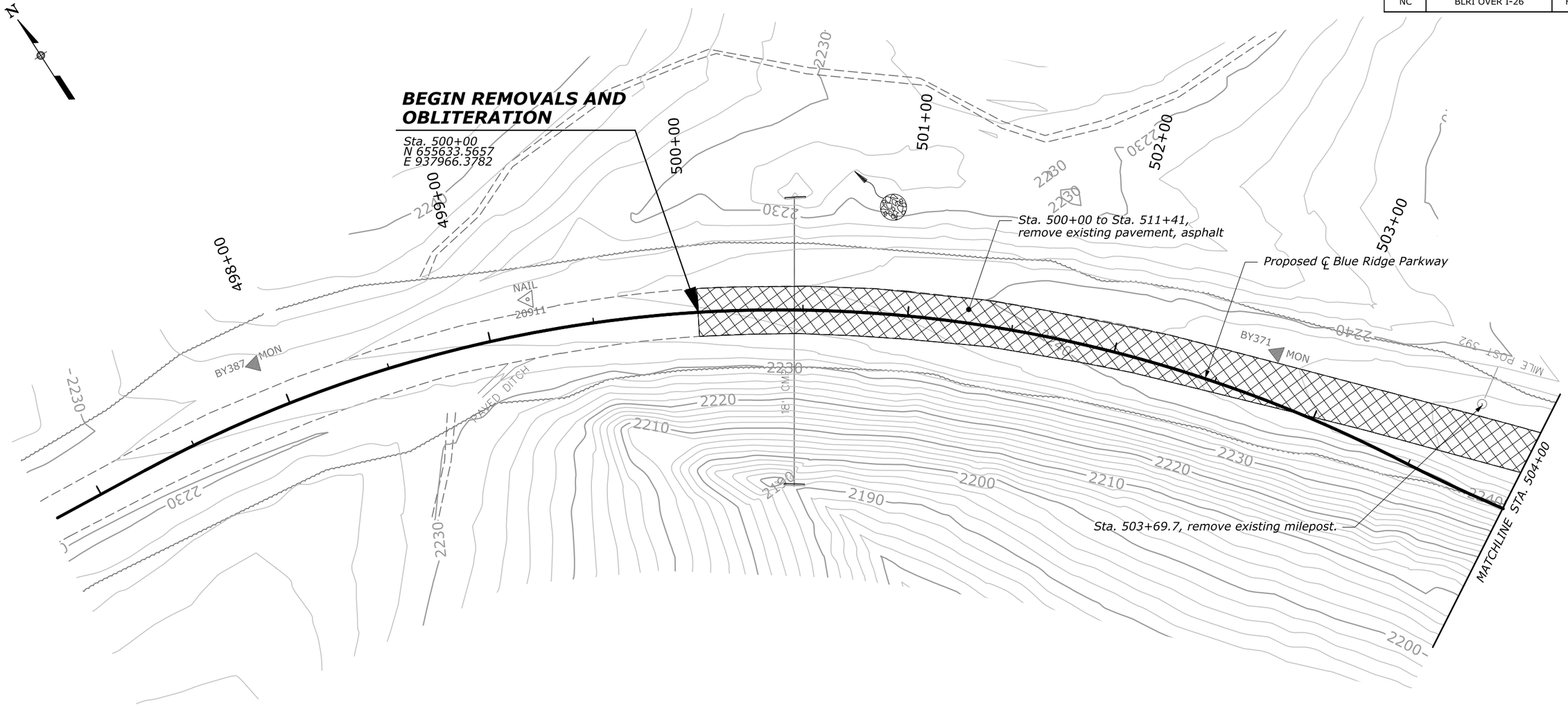

U.S. DEPARTMENT OF TRANSPORTATION
FEDERAL HIGHWAY ADMINISTRATION
EASTERN FEDERAL LANDS HIGHWAY DIVISION
STERLING, VIRGINIA

BLUE RIDGE PARKWAY

REMOVALS AND OBLITERATION PLAN

0 25 50
SCALE IN FEET

16-Dec-2018 05:09 PM M:\PROJECTS_STATE_DOT\NC\blri_i26_nepa\Proj_Dev\CADD\From_Eng_Support\As_Requested_3_2017\F01-F05-BLRI_I_26_NEPA_Removals.dgn

STATE	PROJECT	SHEET NUMBER
NC	BLRI OVER I-26	F02

U.S. DEPARTMENT OF TRANSPORTATION
FEDERAL HIGHWAY ADMINISTRATION
EASTERN FEDERAL LANDS HIGHWAY DIVISION
STERLING, VIRGINIA

BLUE RIDGE PARKWAY

REMOVALS AND OBLITERATION PLAN

0 25 50
SCALE IN FEET

09-Dec-2018 06:09 AM M:\PROJECTS_STATE_DOT\NC\blrl_I26_repo\Proj_Dev\CADD\From_Eng_Support\As_Requested_3_20\F\01-F05-BLRI_I_26_NEPA_Removals.dgn

STATE	PROJECT	SHEET NUMBER
NC	BLRI OVER I-26	F03

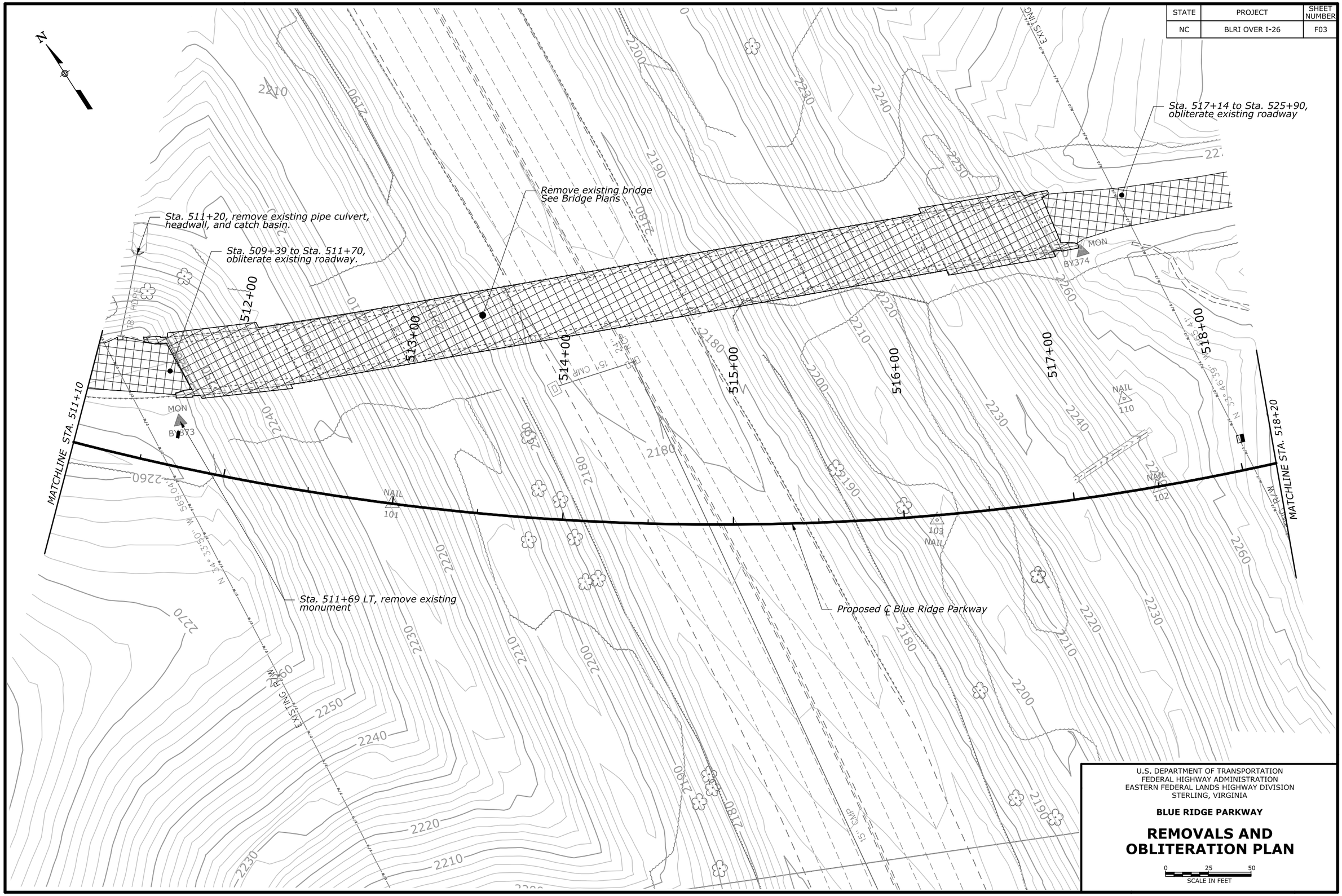

U.S. DEPARTMENT OF TRANSPORTATION
FEDERAL HIGHWAY ADMINISTRATION
EASTERN FEDERAL LANDS HIGHWAY DIVISION
STERLING, VIRGINIA

BLUE RIDGE PARKWAY

REMOVALS AND OBLITERATION PLAN

0 25 50
SCALE IN FEET

11-Dec-2018 09:12 AM M:\PROJECTS_STATE_DOT\NC\blri_i26_nepa\Proj_Dev\CADD\From_Eng_Support\As_Requested_3_2017\F01-F05-BLRI_I_26_NEPA_Removals.dgn

STATE	PROJECT	SHEET NUMBER
NC	BLRI OVER I-26	F04

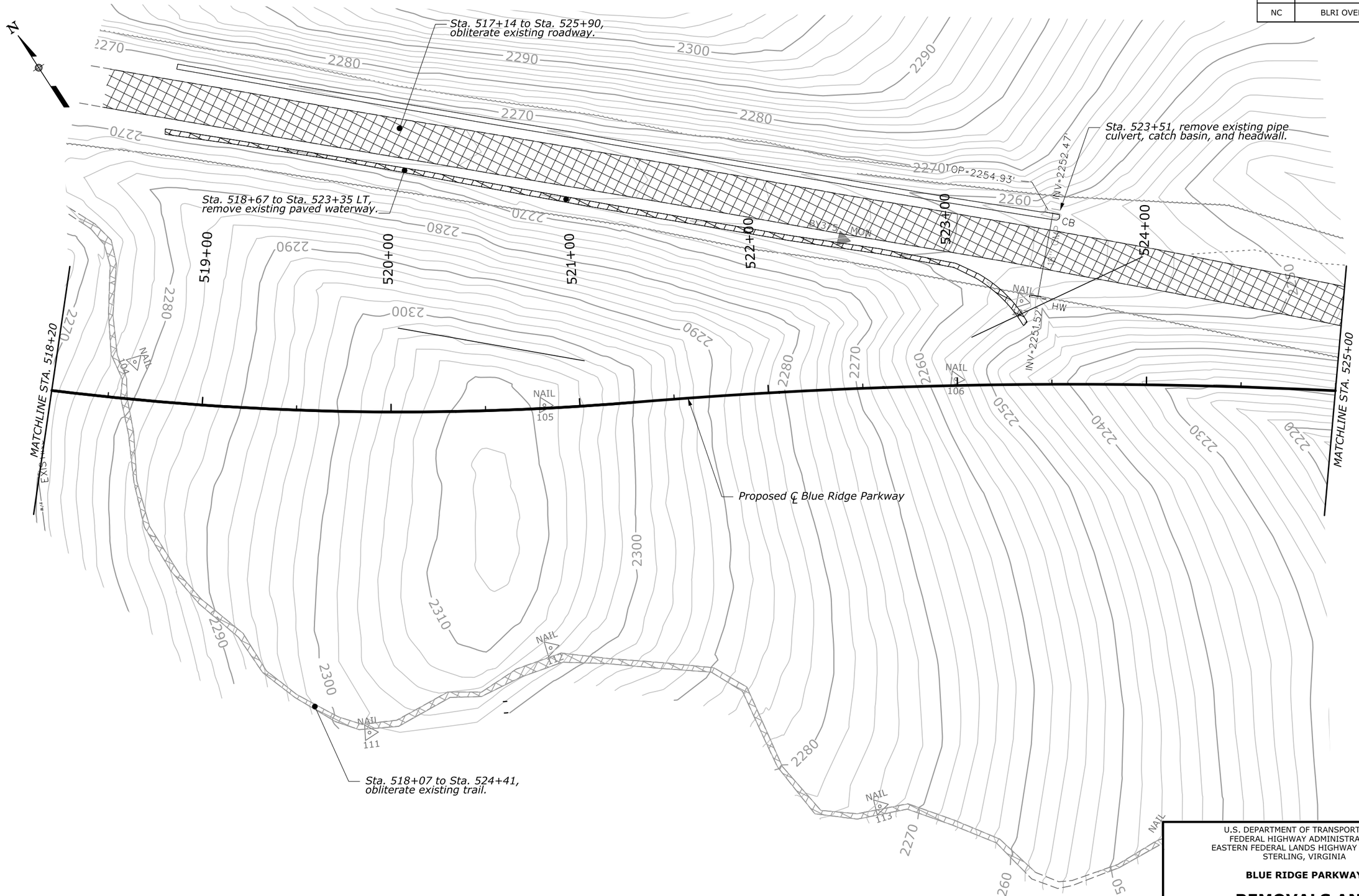

U.S. DEPARTMENT OF TRANSPORTATION
FEDERAL HIGHWAY ADMINISTRATION
EASTERN FEDERAL LANDS HIGHWAY DIVISION
STERLING, VIRGINIA

BLUE RIDGE PARKWAY

REMOVALS AND OBLITERATION PLAN

0 25 50
SCALE IN FEET

11-Dec-2018 10:19 AM M:\PROJECTS_STATE_DOT\NC\blri_i26_repo\Proj_Dev\CADD-From_Eng_Support\As_Requested_3_2017\F01-F05-BLRI_I_26_NEPA_Removals.dgn

STATE	PROJECT	SHEET NUMBER
NC	BLRI OVER I-26	F05

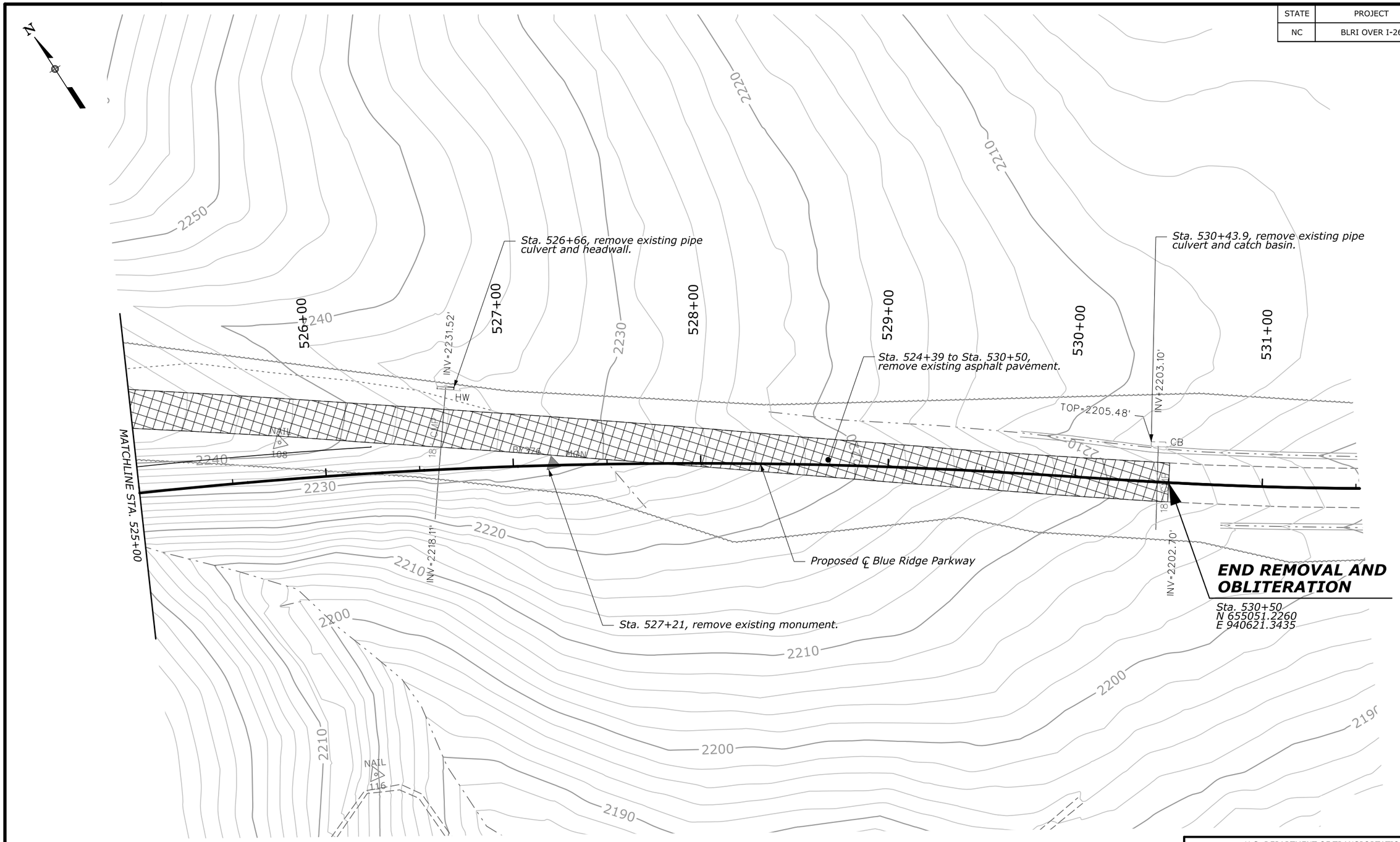

U.S. DEPARTMENT OF TRANSPORTATION
FEDERAL HIGHWAY ADMINISTRATION
EASTERN FEDERAL LANDS HIGHWAY DIVISION
STERLING, VIRGINIA

BLUE RIDGE PARKWAY

REMOVALS AND OBLITERATION PLAN

0 25 50
SCALE IN FEET

11-Dec-2018 09:57 AM M:\PROJECTS_STATE_DOT\NC\blrl_I_26_repo\Proj_Dev\CADD-From_Eng_Support\As_Requested_3_20\F-01-F05-BLRI_I_26_NEPA_Removals.dgn

STATE	PROJECT	SHEET NUMBER
NC	BLRI OVER I-26	G01

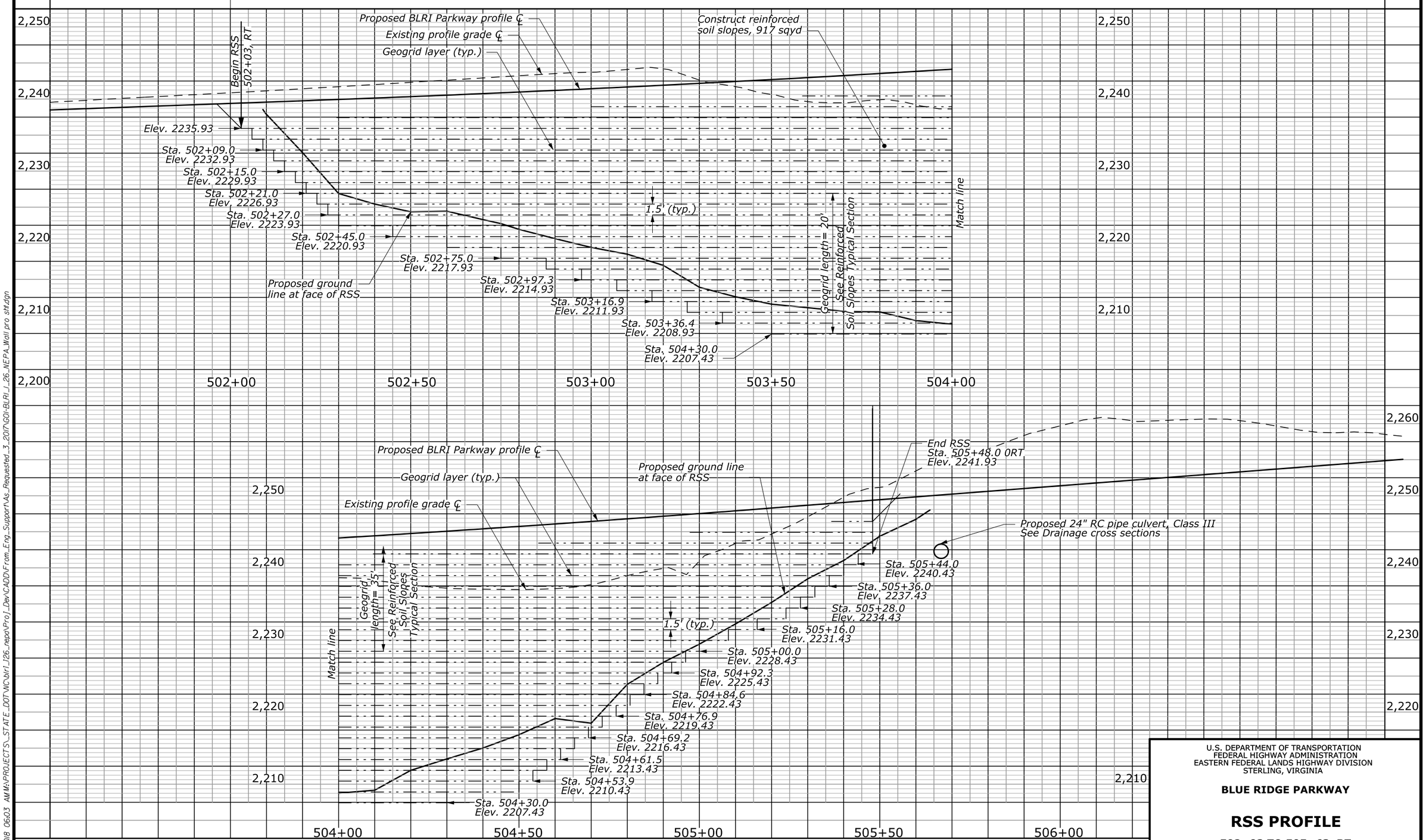

U.S. DEPARTMENT OF TRANSPORTATION
FEDERAL HIGHWAY ADMINISTRATION
EASTERN FEDERAL LANDS HIGHWAY DIVISION
STERLING, VIRGINIA

BLUE RIDGE PARKWAY

RSS PROFILE

502+03 TO 505+63, RT

12-Dec-2018 06:03 AM M:\PROJECTS_STATE_DOT\NC\blri_i26_nepa\Proj_Dev\CADD\From_Eng_Support\As_Requested_3_2017\G01-BLRI_I_26_NEPA_Wall pro sht.dgn

STATE	PROJECT	SHEET NUMBER
NC	BLRI OVER I-26	G02

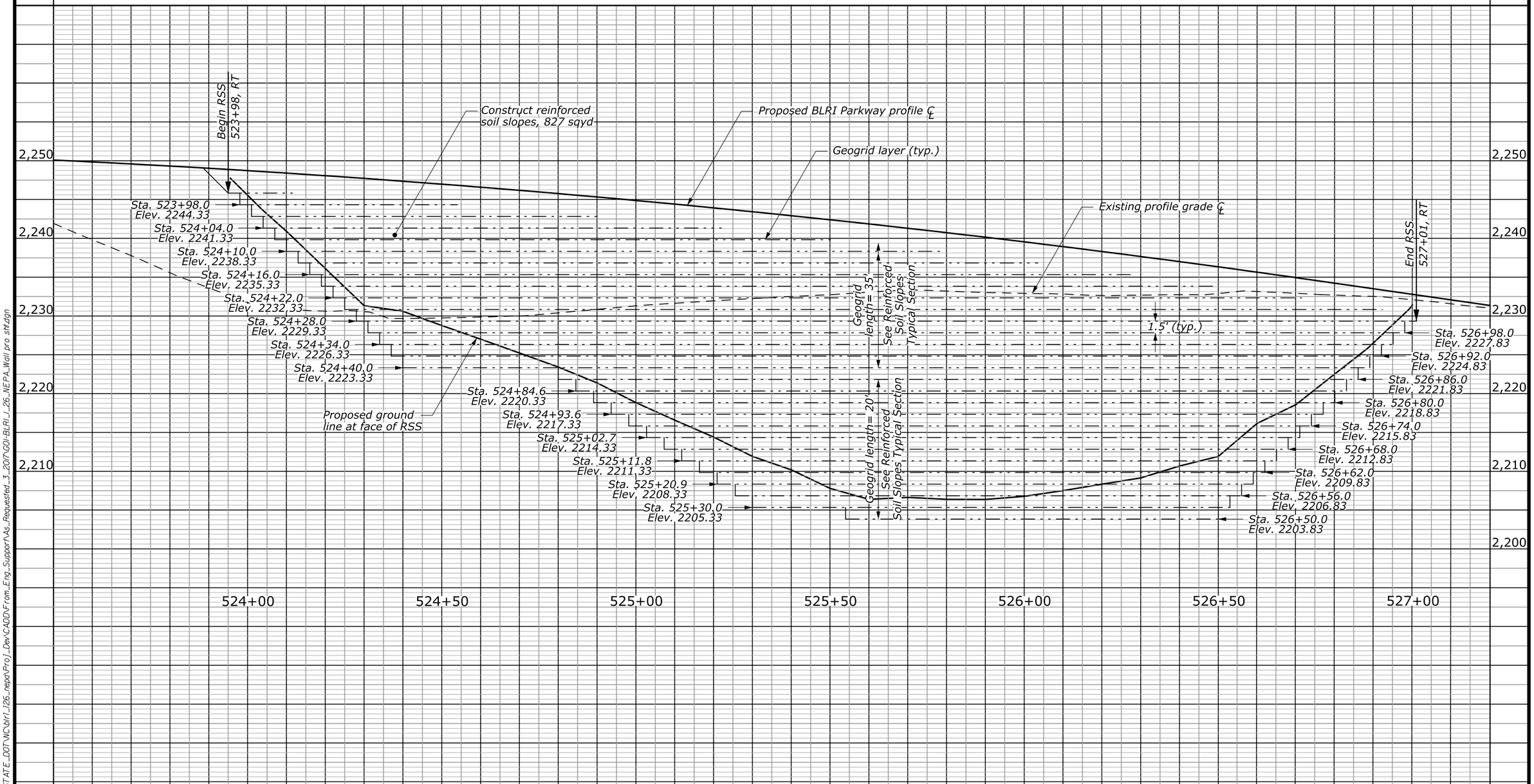

U.S. DEPARTMENT OF TRANSPORTATION
FEDERAL HIGHWAY ADMINISTRATION
EASTERN FEDERAL LANDS HIGHWAY DIVISION
STERLING, VIRGINIA

BLUE RIDGE PARKWAY

RSS PROFILE

523+98 TO 527+01, RT

16-Dec-2018 05:12 PM M:\PROJECTS_STATE_DOT\NC\blri_i26_repo\Proj_Dev\CADD\From_Eng_Support\As_Requested_3_2017\G01-BLRI-I_26_NEPA_Wall pro sht.dgn

STATE	PROJECT	SHEET NUMBER
NC	BLRI OVER I-26	G03

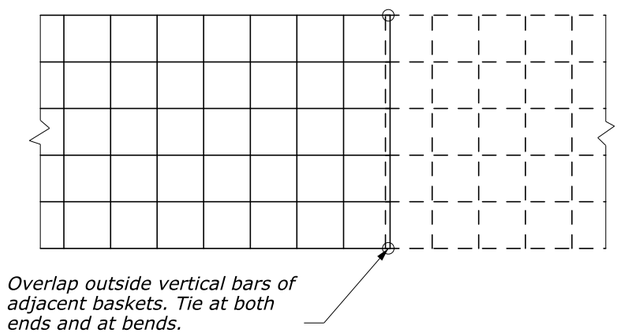

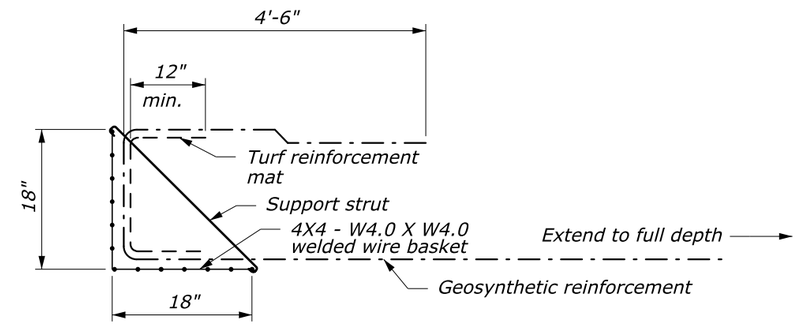

WIRE BASKET DETAIL

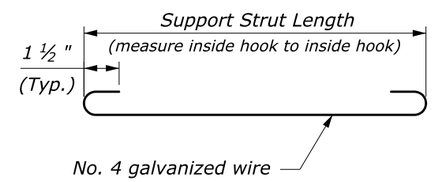

SUPPORT STRUT DETAIL

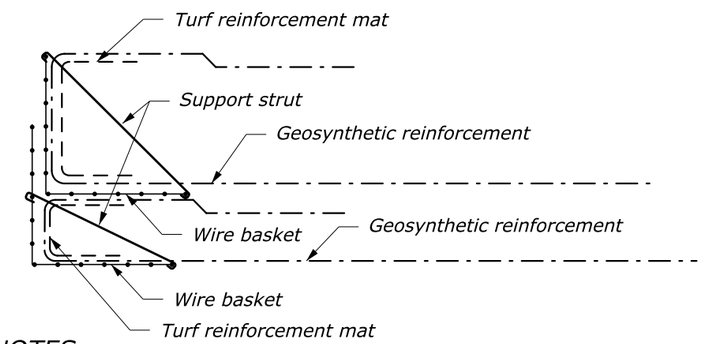

NOTES:

1. Set topmost wire basket inside wire basket below.
2. Adjust height to follow grade of top of wall.
3. Use Natina color treatment for welded wire basekts provide mottled, rustic brown finish. Do not apply treatment in the field.

TOP WIRE BASKET DETAIL

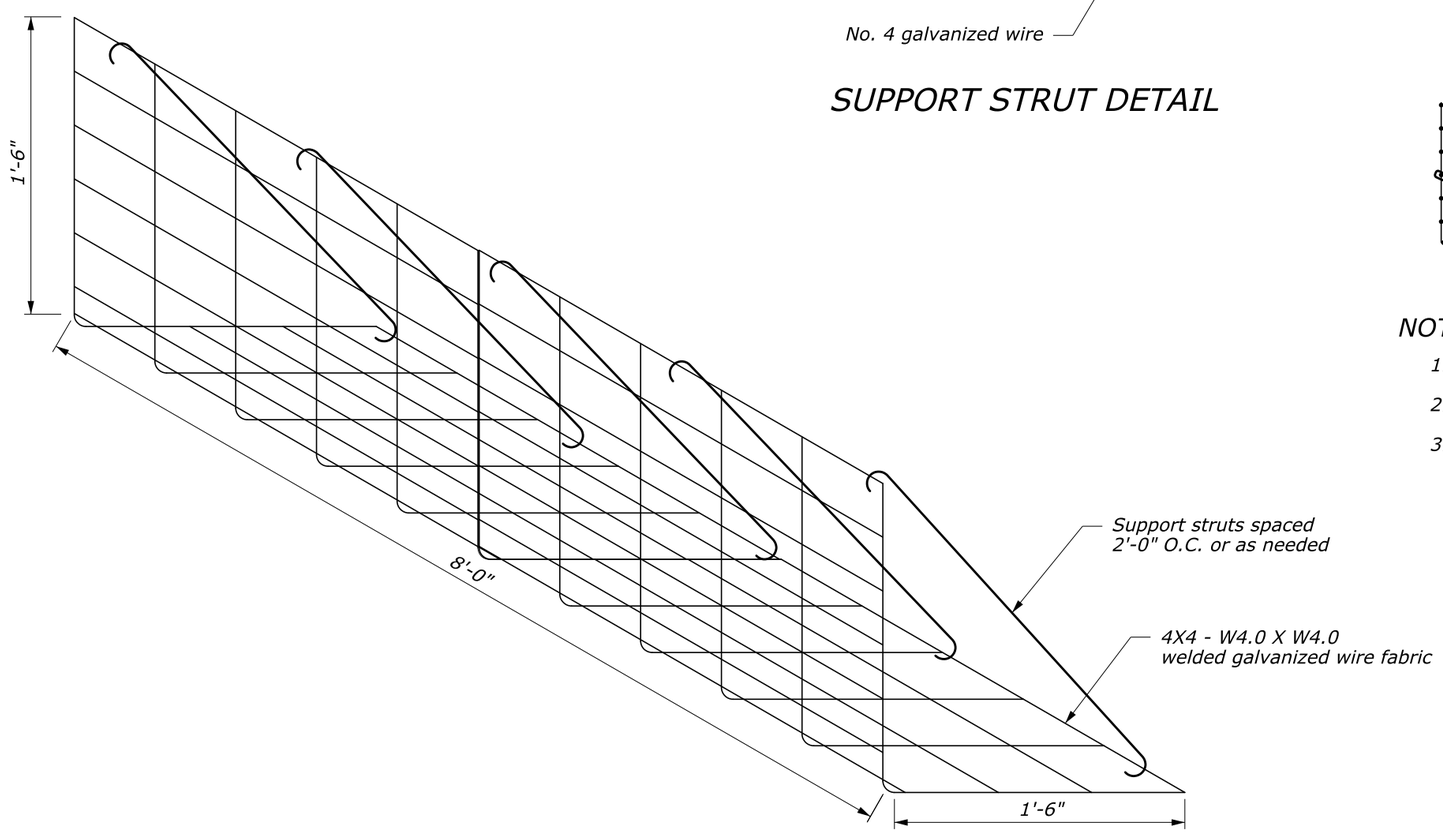

WIRE BASKET ISOMETRIC VIEW

NO SCALE

U.S. DEPARTMENT OF TRANSPORTATION
FEDERAL HIGHWAY ADMINISTRATION
EASTERN FEDERAL LANDS HIGHWAY DIVISION
STERLING, VIRGINIA

BLUE RIDGE PARKWAY

WIRE BASKET DETAILS

14-Mar-2019 10:34 AM \\fhfl5fileserve.fhd.fhwa.dot.gov\data\PROJECTS_STATE_DOT\NC\blri_i26_nepa\Proj_Dev\CADD\From_Eng_Support\As_Requested_3_2017\G03-NCDOT463A_stE26i_detail.dgn

STATE	PROJECT	SHEET NUMBER
NC	BLRI OVER I-26	K01

HYDRAULIC DATA:

Drainage area = 0.52 acres
Design frequency = 50 year
Design discharge = 3.6 cfs

NOTES:

1. See NCDOT 2018 Roadway Standard Drawing 300.01 for pipe installation.
2. See NCDOT 2018 Roadway Standard Drawing 876.02 for rip rap.

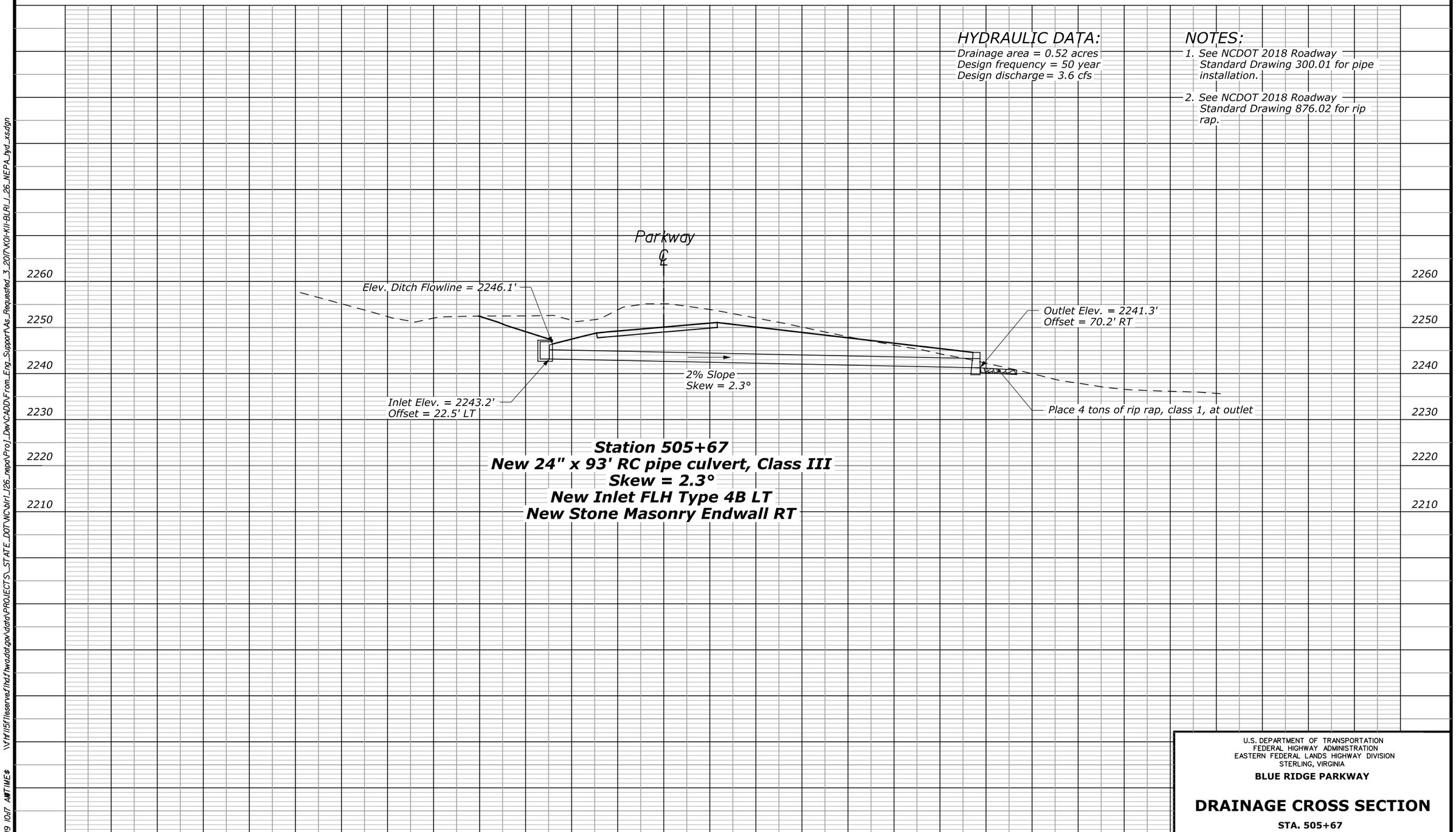

U.S. DEPARTMENT OF TRANSPORTATION
FEDERAL HIGHWAY ADMINISTRATION
EASTERN FEDERAL LANDS HIGHWAY DIVISION
STERLING, VIRGINIA

BLUE RIDGE PARKWAY

DRAINAGE CROSS SECTION

STA. 505+67

19-Mar-2019 10:17 AM TIME$ \\fhfl15fileserve.flhd.fhwa.dot.gov\data\PROJECTS_STATE_DOT\NC\blri_I26_nepa\Proj_Dev\CADD\From_Eng_Support\As_Requested_3_2017\K01-K11-BLRI_I_26_NEPA_hyd_xs.dgn

STATE	PROJECT	SHEET NUMBER
NC	BLRI OVER I-26	K02

NOTES:

1. See NCDOT 2018 Roadway Standard Drawing 300.01 for pipe installation.
2. See NCDOT 2018 Roadway Standard Drawing 876.02 for rip rap.

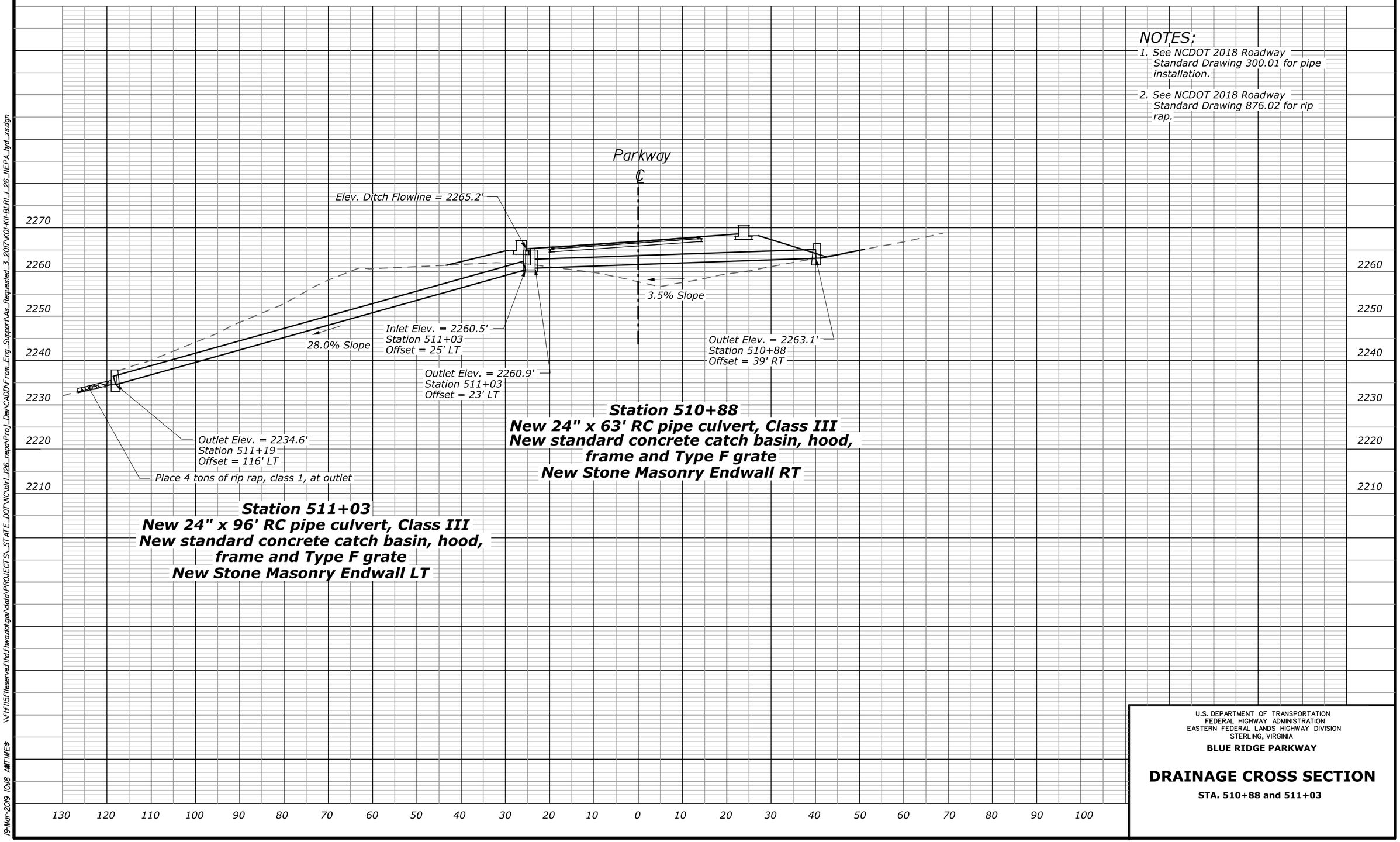

U.S. DEPARTMENT OF TRANSPORTATION
FEDERAL HIGHWAY ADMINISTRATION
EASTERN FEDERAL LANDS HIGHWAY DIVISION
STERLING, VIRGINIA

BLUE RIDGE PARKWAY

DRAINAGE CROSS SECTION

STA. 510+88 and 511+03

19-Mar-2019 10:18 AM TIME$ \\fhfl15fileserve.fhd.fhwa.dot.gov\data\PROJECTS_STATE_DOT\NC\blri_I26_nepa\Proj_Dev\CADD\From_Eng_Support\As_Requested_3_2017\K01-K11-BLRI_I_26_NEPA_hyd_xs.dgn

STATE	PROJECT	SHEET NUMBER
NC	BLRI OVER I-26	K03

NOTES:

1. See NCDOT 2018 Roadway Standard Drawing 300.01 for pipe installation.
2. See NCDOT 2018 Roadway Standard Drawing 876.02 for rip rap.

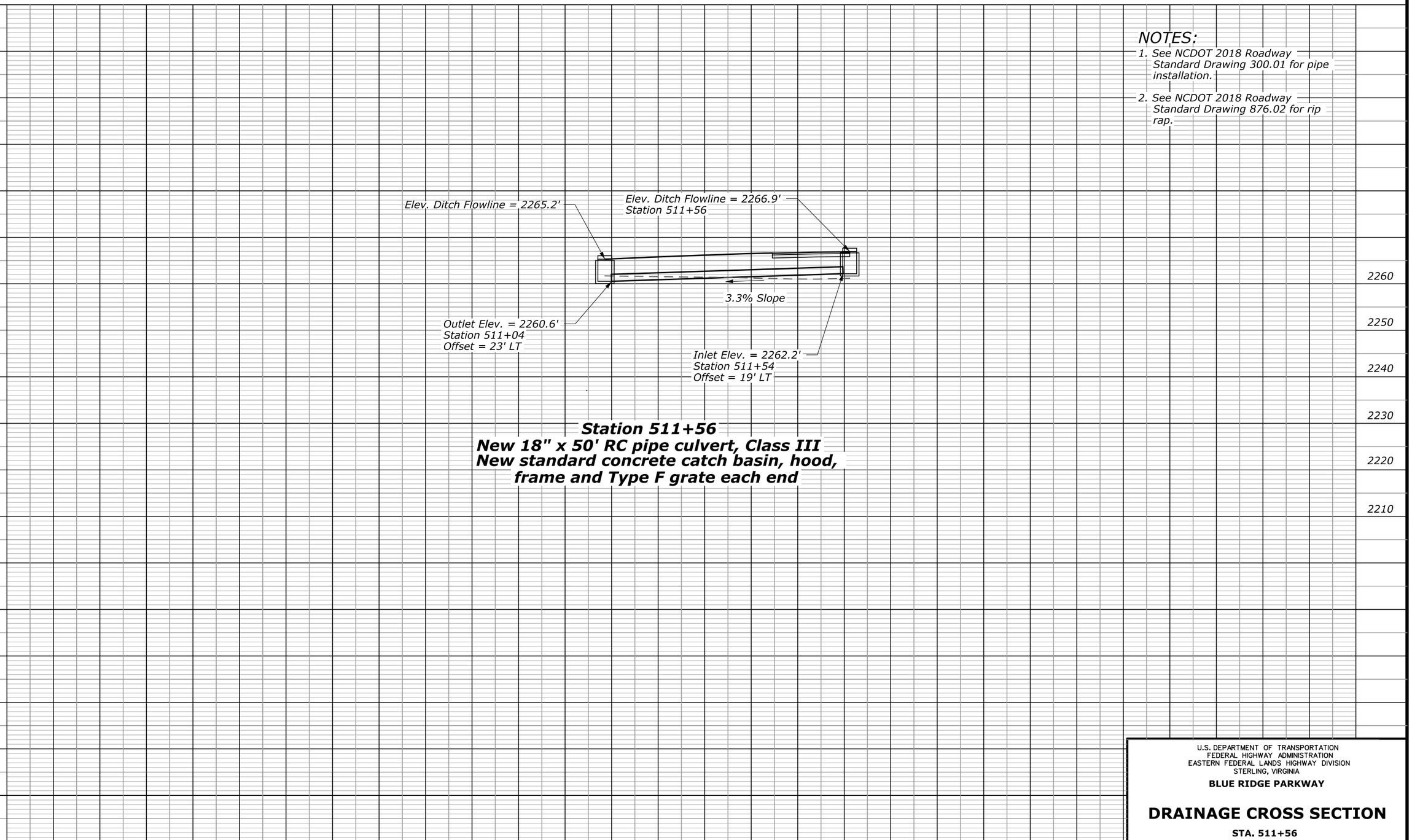

U.S. DEPARTMENT OF TRANSPORTATION
FEDERAL HIGHWAY ADMINISTRATION
EASTERN FEDERAL LANDS HIGHWAY DIVISION
STERLING, VIRGINIA

BLUE RIDGE PARKWAY

DRAINAGE CROSS SECTION

STA. 511+56

19-Mar-2019 10:18 AM TIME$ \\fhfl15fileserve.fhd.fhwa.dot.gov\data\PROJECTS_STATE_DOT\NC\blri_I26_nepa\Proj_Dev\CADD\From_Eng_Support\As_Requested_3_2017\K01-K11-BLRI_I_26_NEPA_hyd_xs.dgn

STATE	PROJECT	SHEET NUMBER
NC	BLRI OVER I-26	K04

NOTES:

1. See NCDOT 2018 Roadway Standard Drawing 300.01 for pipe installation.
2. See NCDOT 2018 Roadway Standard Drawing 876.02 for rip rap.

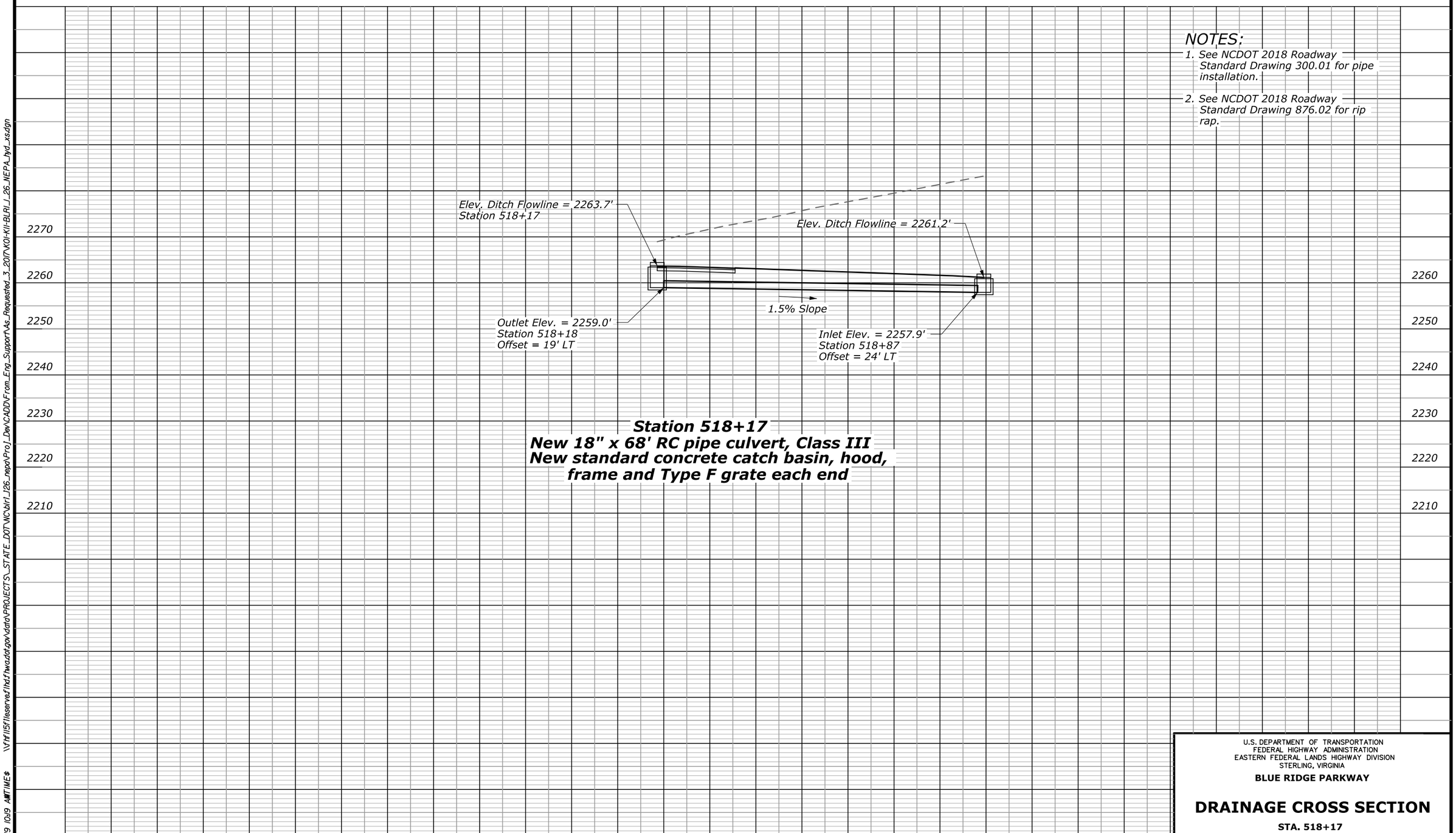

U.S. DEPARTMENT OF TRANSPORTATION
FEDERAL HIGHWAY ADMINISTRATION
EASTERN FEDERAL LANDS HIGHWAY DIVISION
STERLING, VIRGINIA

BLUE RIDGE PARKWAY

DRAINAGE CROSS SECTION

STA. 518+17

19-Mar-2019 10:19 AM TIME$ \\fhfl5fileserve.flhd.fhwa.dot.gov\data\PROJECTS_STATE_DOT\NC\blrl_l26_nepa\Proj_Dev\CADD\From_Eng_Support\As_Requested_3_2017\K01-K11-BLRI_I_26_NEPA_hyd_xs.dgn

STATE	PROJECT	SHEET NUMBER
NC	BLRI OVER I-26	K05

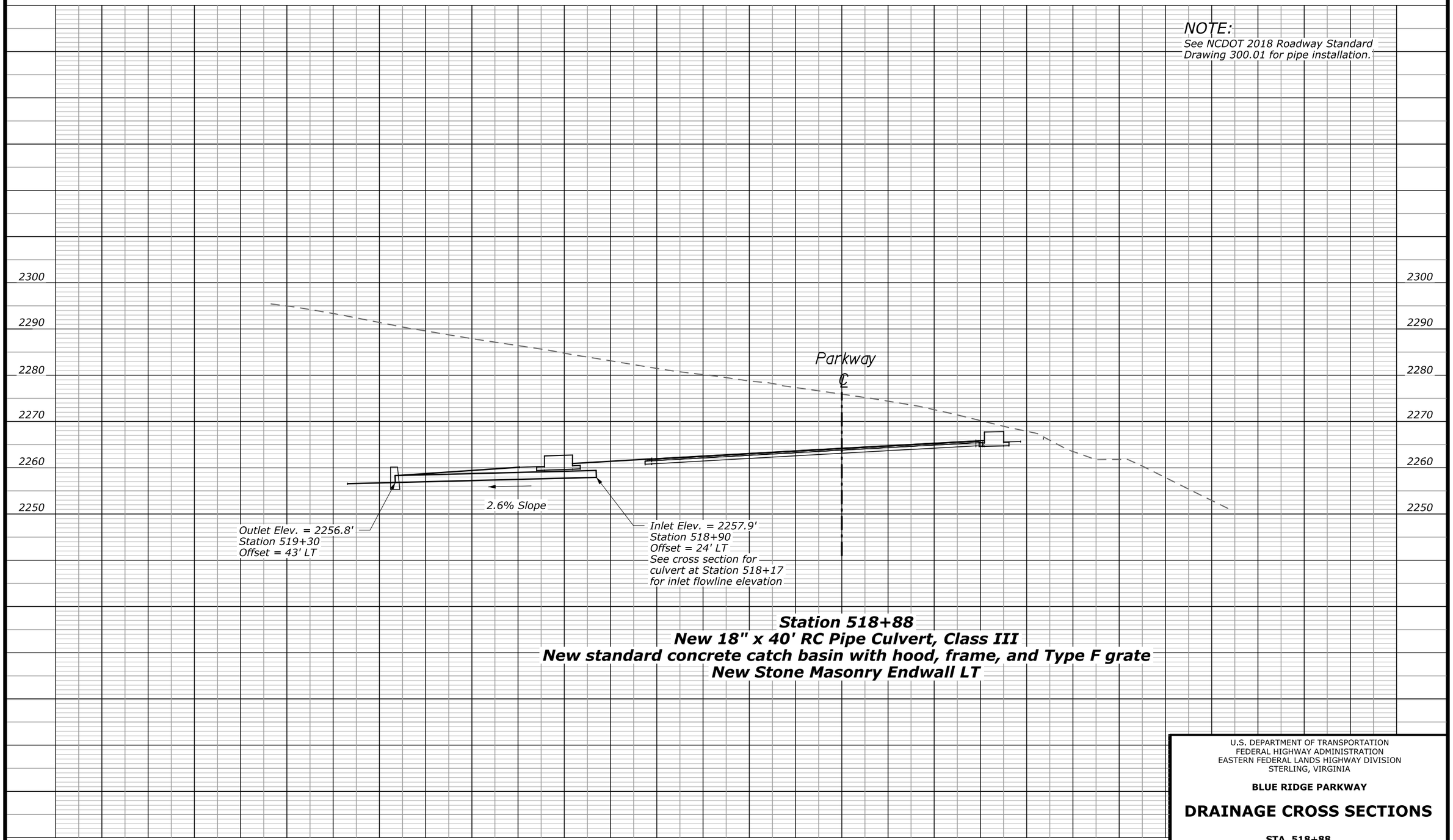

U.S. DEPARTMENT OF TRANSPORTATION
FEDERAL HIGHWAY ADMINISTRATION
EASTERN FEDERAL LANDS HIGHWAY DIVISION
STERLING, VIRGINIA

BLUE RIDGE PARKWAY

DRAINAGE CROSS SECTIONS

STA. 518+88

\\fhfl15fileserve.fhd.fhwa.dot.gov\data\PROJECTS_STATE_DOT\NC\blri_i26_nepa\Proj_Dev\CADD\From_Eng_Support\As_Requested_3_2017\K01-K11-BLRI_I_26_NEPA_hyd_xs.dgn

19-Mar-2019 10:19 AM

STATE	PROJECT	SHEET NUMBER
NC	BLRI OVER I-26	K06

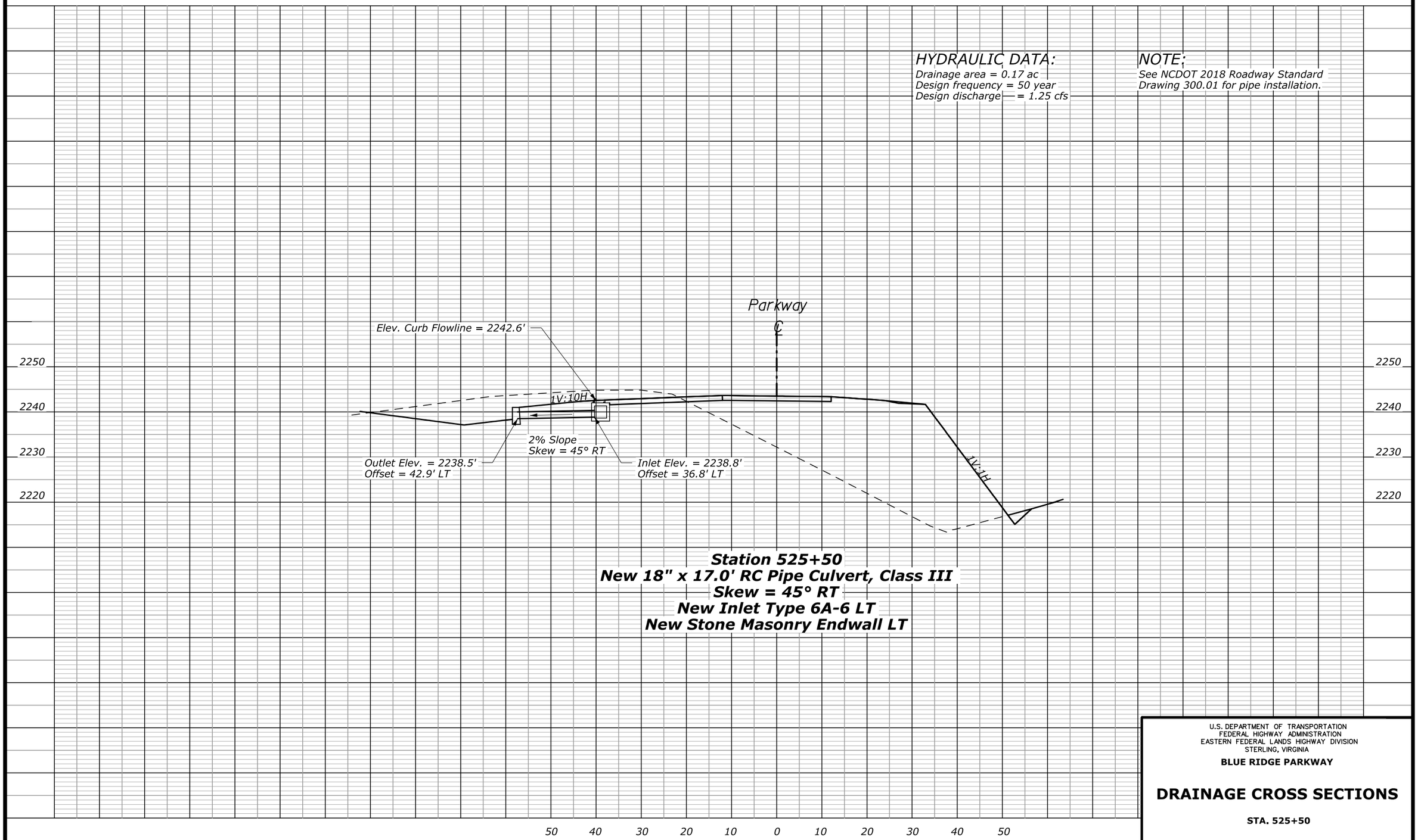

U.S. DEPARTMENT OF TRANSPORTATION
FEDERAL HIGHWAY ADMINISTRATION
EASTERN FEDERAL LANDS HIGHWAY DIVISION
STERLING, VIRGINIA

BLUE RIDGE PARKWAY

DRAINAGE CROSS SECTIONS

STA. 525+50

19-Mar-2019 10:20 AM \\fhf1\5fileserve.fhd.fhwa.dot.gov\data\PROJECTS_STATE_DOT\NC\blri_i26_nepa\Proj_Dev\CADD\From_Eng_Support\As_Requested_3_2017\K01-K11-BLRI_I_26_NEPA_hyd_xs.dgn

STATE	PROJECT	SHEET NUMBER
NC	BLRI OVER I-26	K07

HYDRAULIC DATA:

Drainage area = 4.02 acres
Design frequency = 50 year
Design discharge = 3.8 cfs

NOTES:

1. See NCDOT 2018 Roadway Standard Drawing 300.01 for pipe installation.
2. See NCDOT 2018 Roadway Standard Drawing 876.02 for rip rap.

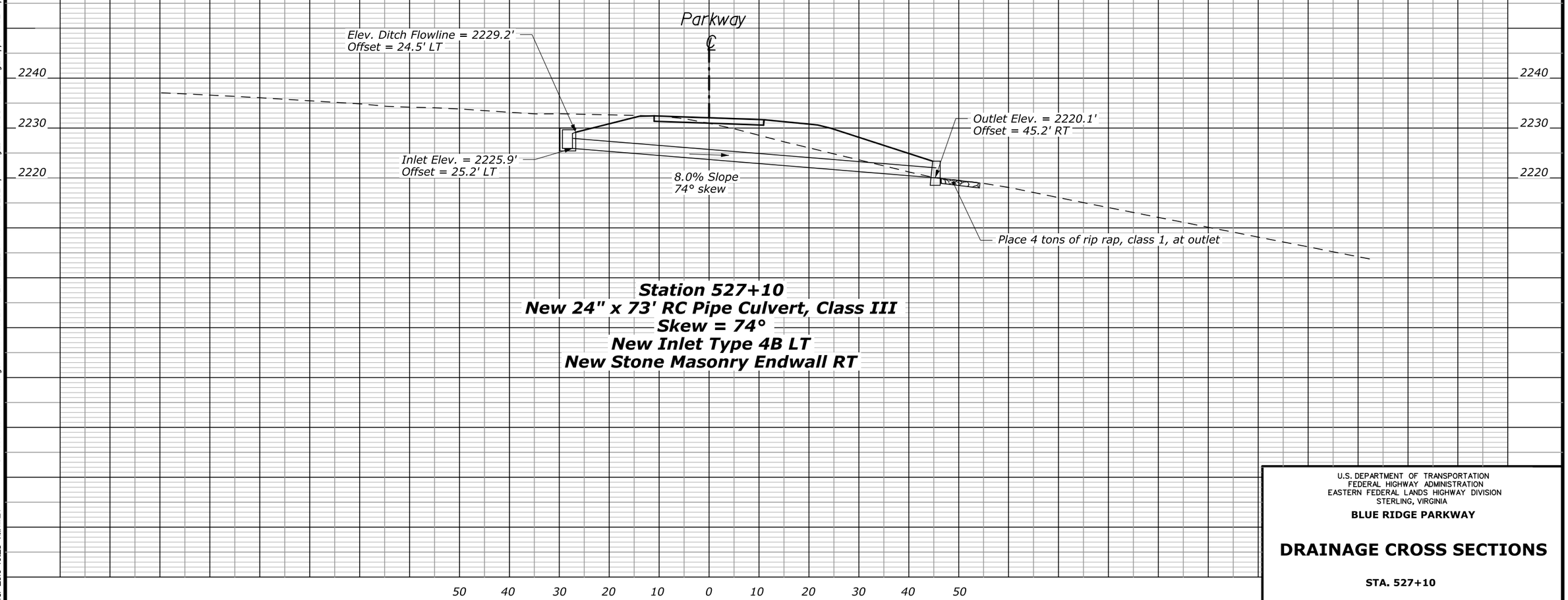

Station 527+10
New 24" x 73' RC Pipe Culvert, Class III
Skew = 74°
New Inlet Type 4B LT
New Stone Masonry Endwall RT

U.S. DEPARTMENT OF TRANSPORTATION
FEDERAL HIGHWAY ADMINISTRATION
EASTERN FEDERAL LANDS HIGHWAY DIVISION
STERLING, VIRGINIA

BLUE RIDGE PARKWAY

DRAINAGE CROSS SECTIONS

STA. 527+10

19-Mar-2019 10:23 AM TIME$ \\fhfl5fileserve.flhd.fhwa.dot.gov\data\PROJECTS_STATE_DOT\NC\blri_I26_nepa\Proj_Dev\CADD\From_Eng_Support\As_Requested_3_2017\K01-K11-BLRI_I_26_NEPA_hyd_xs.dgn

STATE	PROJECT	SHEET NUMBER
NC	BLRI OVER I-26	K08

HYDRAULIC DATA:

Drainage area = 0.33 acres
Design frequency = 50 year
Design discharge = 0.5 cfs

NOTES:

1. See NCDOT 2018 Roadway Standard Drawing 300.01 for pipe installation.
2. See NCDOT 2018 Roadway Standard Drawing 876.02 for riprap.

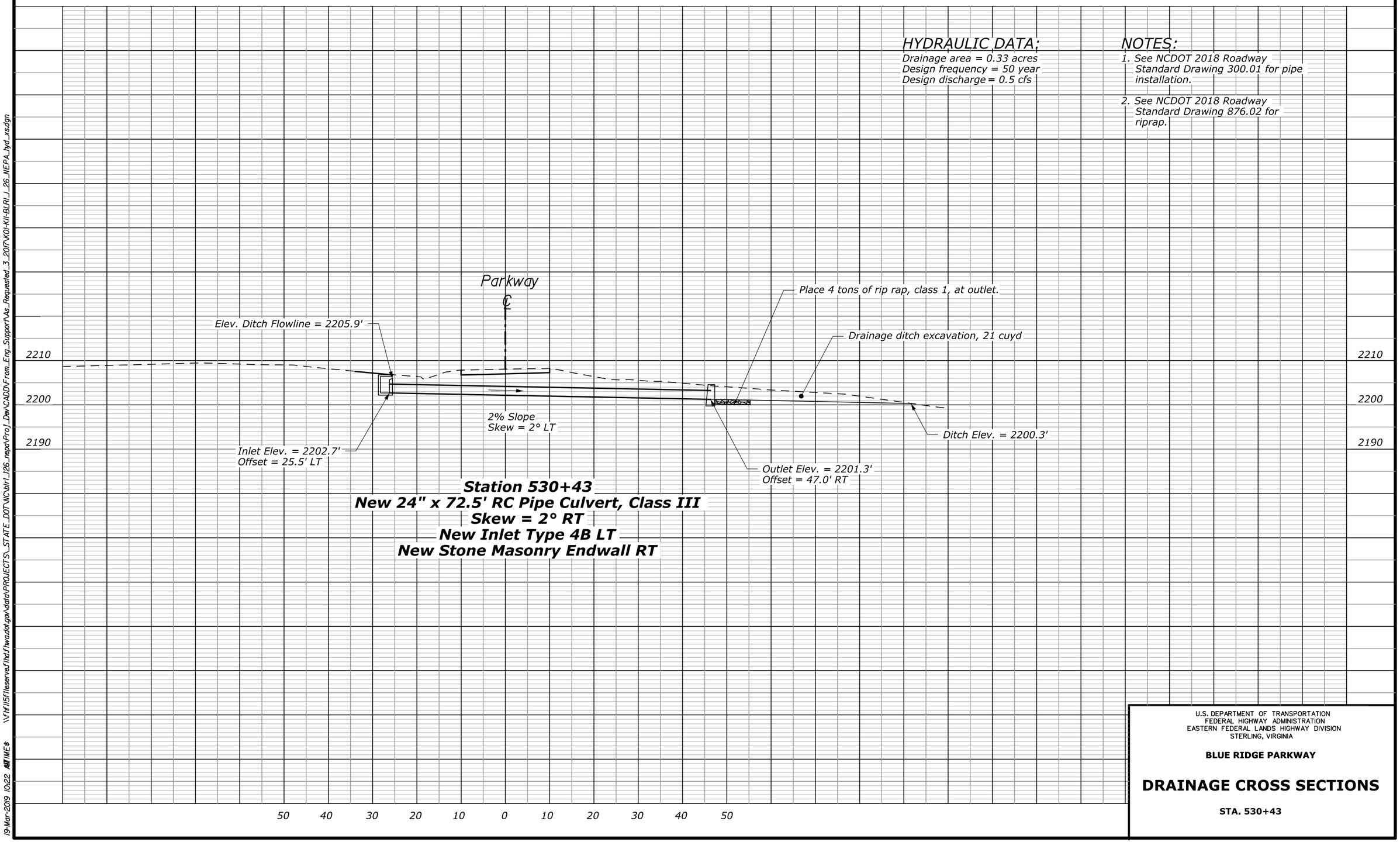

U.S. DEPARTMENT OF TRANSPORTATION
FEDERAL HIGHWAY ADMINISTRATION
EASTERN FEDERAL LANDS HIGHWAY DIVISION
STERLING, VIRGINIA

BLUE RIDGE PARKWAY

DRAINAGE CROSS SECTIONS

STA. 530+43

19-Mar-2019 10:22 AM TIME$ \\fhfl5fileserve.flhd.fhwa.dot.gov\data\PROJECTS_STATE_DOT\NC\blrl_l26_nepa\Proj_Dev\CADD\From_Eng_Support\As_Requested_3_2017\K01-K11-BLRI_L26_NEPA_hyd_xs.dgn

STATE	PROJECT	SHEET NUMBER
NC	BLRI OVER I-26	K09

HYDRAULIC DATA:

Drainage area = 1.04 acres
Design frequency = 50 year
Design discharge = 1.1 cfs

NOTES:

1. See NCDOT 2018 Roadway Standard Drawing 300.01 for pipe installation.
2. See NCDOT 2018 Roadway Standard Drawing 876.02 for riprap.

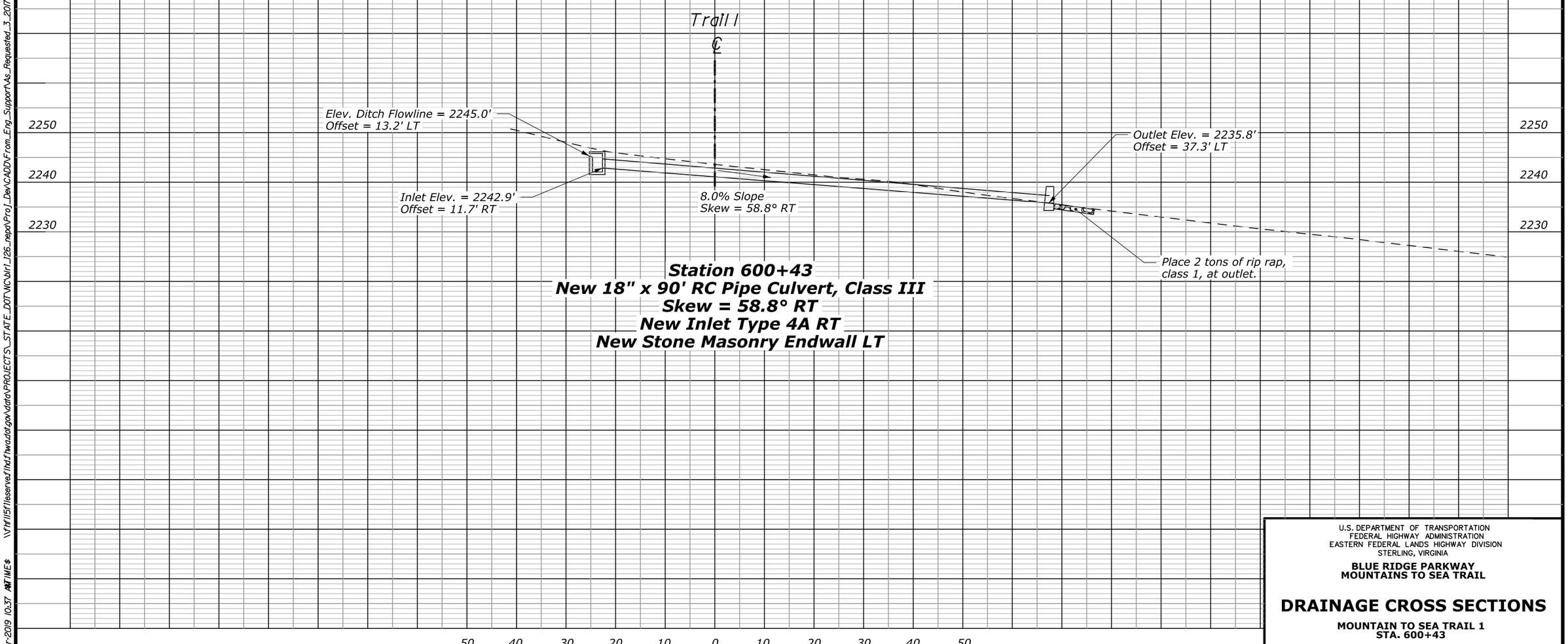

Station 600+43
New 18" x 90' RC Pipe Culvert, Class III
Skew = 58.8° RT
New Inlet Type 4A RT
New Stone Masonry Endwall LT

U.S. DEPARTMENT OF TRANSPORTATION
FEDERAL HIGHWAY ADMINISTRATION
EASTERN FEDERAL LANDS HIGHWAY DIVISION
STERLING, VIRGINIA

BLUE RIDGE PARKWAY
MOUNTAINS TO SEA TRAIL

DRAINAGE CROSS SECTIONS

MOUNTAIN TO SEA TRAIL 1
STA. 600+43

19-Mar-2019 10:37 AM TIME$ \\fhfl15f1leserve.flhd.fhwa.dot.gov\data\PROJECTS_STATE_DOT\NC\blri_I26_nepa\Proj_Dev\CADD\From_Eng_Support\As_Requested_3_2017\K01-K11-BLRI_I_26_NEPA_hyd_xs.dgn

STATE	PROJECT	SHEET NUMBER
NC	BLRI OVER I-26	K10

HYDRAULIC DATA:

Drainage area = 0.54 acres
Design frequency = 50 year
Design discharge = 0.8 cfs

NOTES:

1. See NCDOT 2018 Roadway Standard Drawing 300.01 for pipe installation.
2. See K sheets for ditch profiles.
3. See M sheets for grading information.

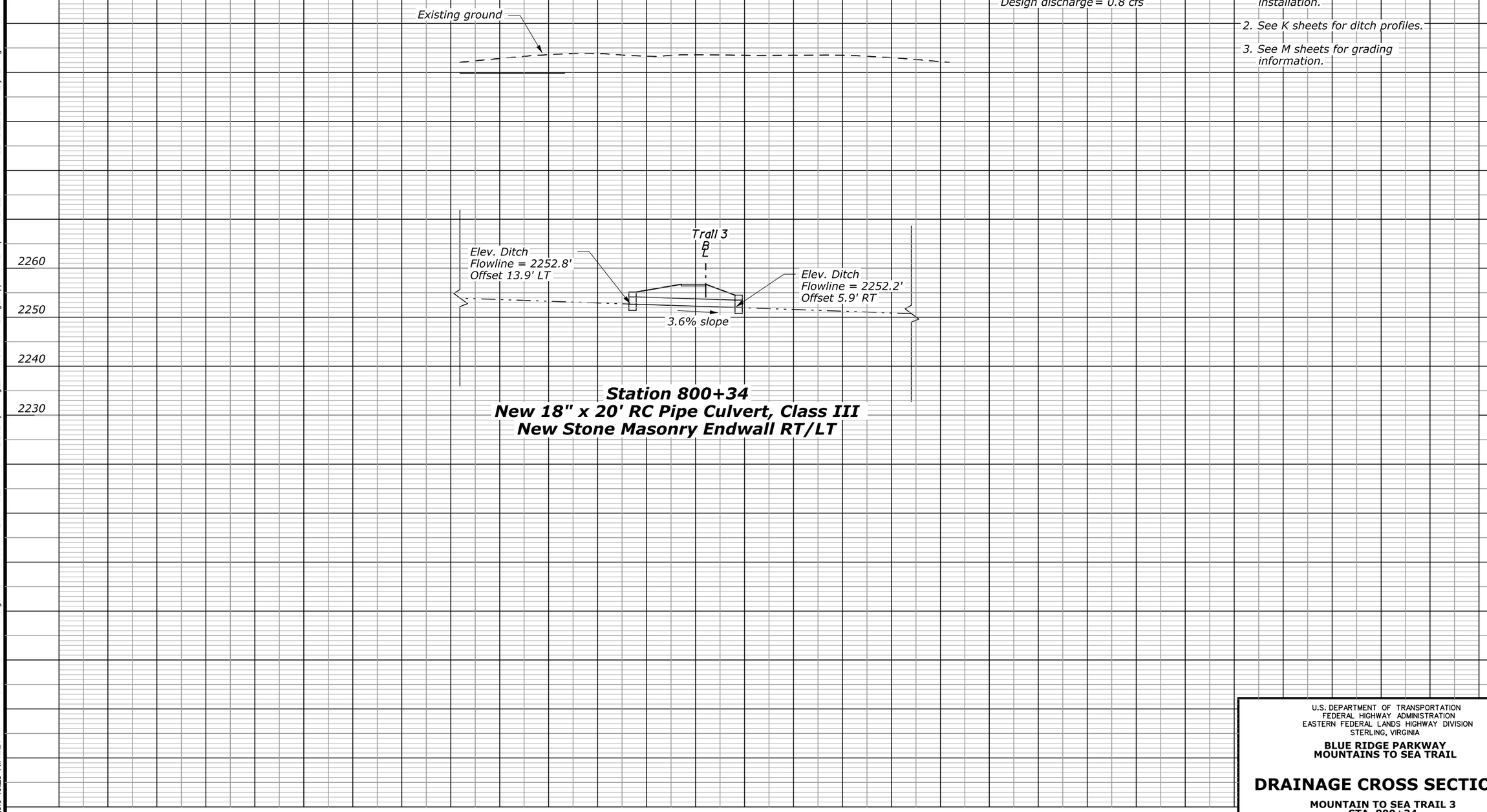

U.S. DEPARTMENT OF TRANSPORTATION
FEDERAL HIGHWAY ADMINISTRATION
EASTERN FEDERAL LANDS HIGHWAY DIVISION
STERLING, VIRGINIA

BLUE RIDGE PARKWAY
MOUNTAINS TO SEA TRAIL

DRAINAGE CROSS SECTIONS

MOUNTAIN TO SEA TRAIL 3
STA. 800+34

19-Mar-2019 10:26 AM TIME$ \\fhfl15fileserve.flhd.fhwa.dot.gov\data\PROJECTS_STATE_DOT\NC\blri_I26_nepa\Proj_Dev\CADD\From_Eng_Support\As_Requested_3_2017\K01-K11-BLRI_I_26_NEPA_hyd_xs.dgn

STATE	PROJECT	SHEET NUMBER
NC	BLRI OVER I-26	K11

HYDRAULIC DATA:

Drainage area = 0.43 acres
Design frequency = 50 year
Design discharge = 1.3 cfs

NOTES:

1. See NCDOT 2018 Roadway Standard Drawing 300.01 for pipe installation.
2. See K sheets for ditch profiles.
3. See M sheets for grading information.

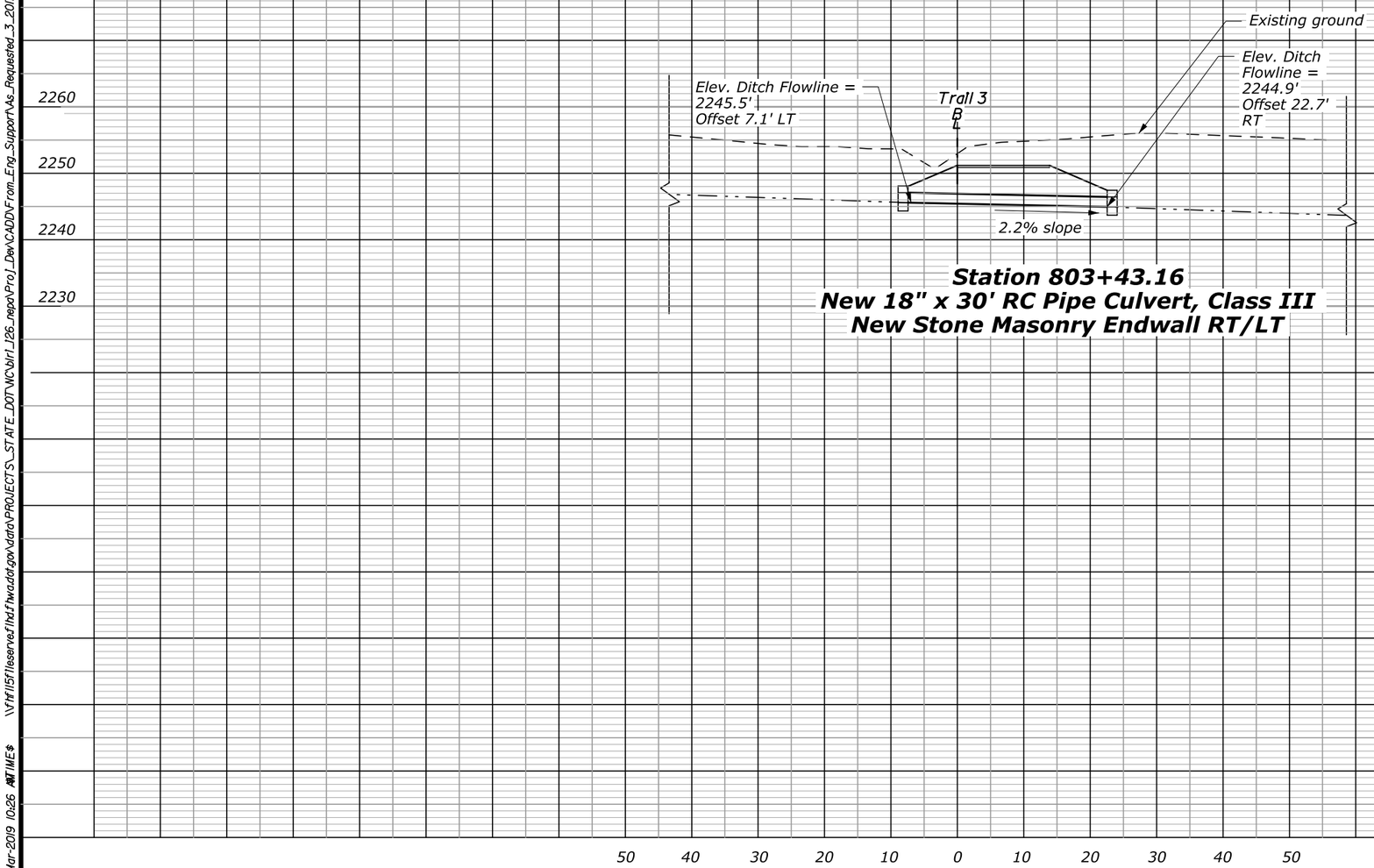

Station 803+43.16
New 18" x 30' RC Pipe Culvert, Class III
New Stone Masonry Endwall RT/LT

U.S. DEPARTMENT OF TRANSPORTATION
FEDERAL HIGHWAY ADMINISTRATION
EASTERN FEDERAL LANDS HIGHWAY DIVISION
STERLING, VIRGINIA

BLUE RIDGE PARKWAY
MOUNTAINS TO SEA TRAIL

DRAINAGE CROSS SECTIONS

MOUNTAIN TO SEA TRAIL 3
STA. 803+43

19-Mar-2019 10:26 AM TIME$ \\fhfl5fileserve.flhd.fhwa.dot.gov\data\PROJECTS_STATE_DOT\NC\blrl_l26_nepa\Proj_Dev\CADD\From_Eng_Support\As_Requested_3_2017\K01-K11-BLRI_I_26_NEPA_hyd_xs.dgn

STATE	PROJECT	SHEET NUMBER
NC	BLRI OVER I-26	K12

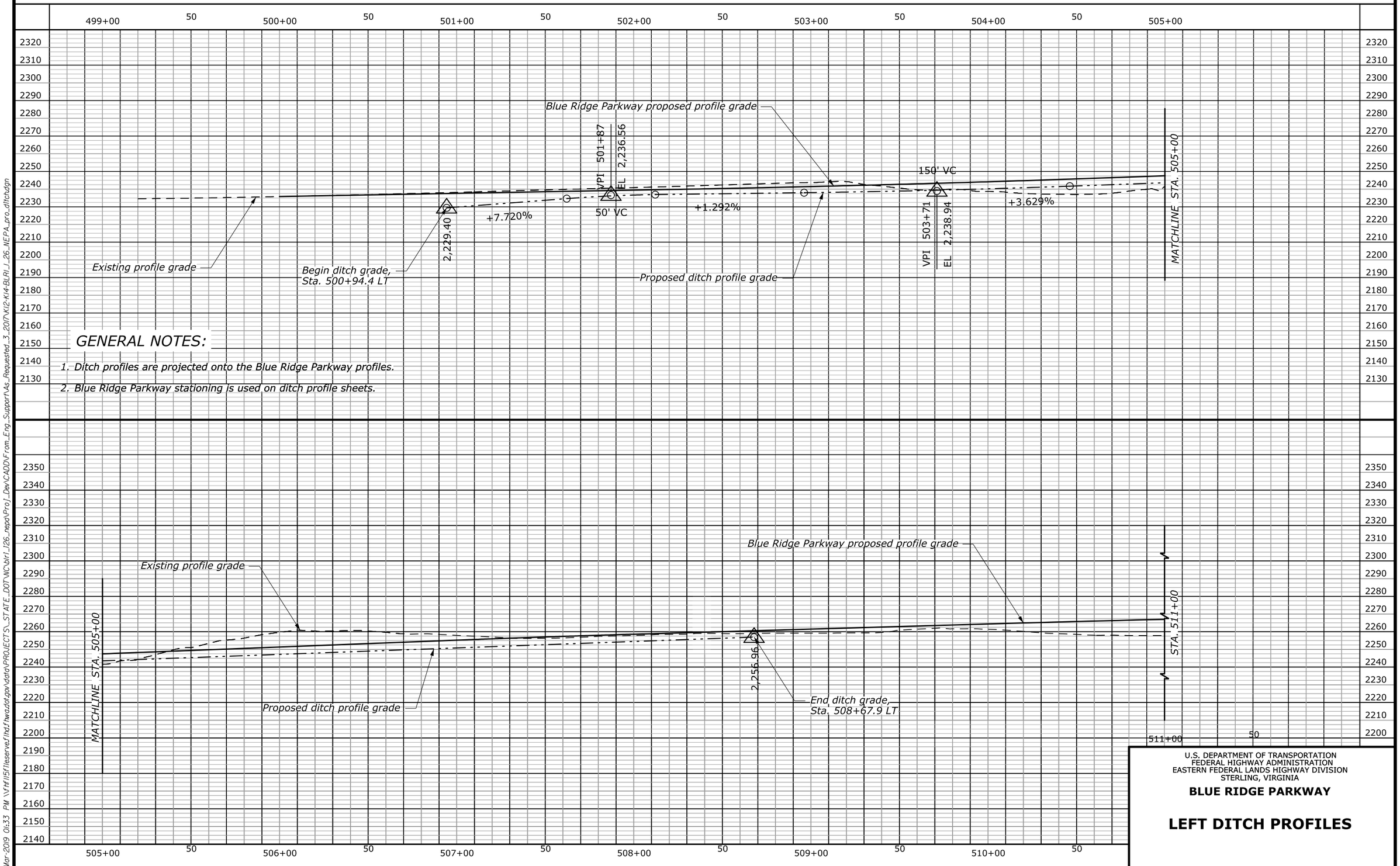

GENERAL NOTES:

1. Ditch profiles are projected onto the Blue Ridge Parkway profiles.
2. Blue Ridge Parkway stationing is used on ditch profile sheets.

U.S. DEPARTMENT OF TRANSPORTATION
FEDERAL HIGHWAY ADMINISTRATION
EASTERN FEDERAL LANDS HIGHWAY DIVISION
STERLING, VIRGINIA

BLUE RIDGE PARKWAY

LEFT DITCH PROFILES

21-Mar-2019 01:33 PM \\fhfl15fileserve.flhd.fhwa.dot.gov\data\PROJECTS_STATE_DOT\NC\blri_I26_nepa\Proj_Dev\CADD\From_Eng_Support\As_Requested_3_2017\K12-K14-BLRI_I_26_NEPA_pro_ditch.dgn

STATE	PROJECT	SHEET NUMBER
NC	BLRI OVER I-26	K13

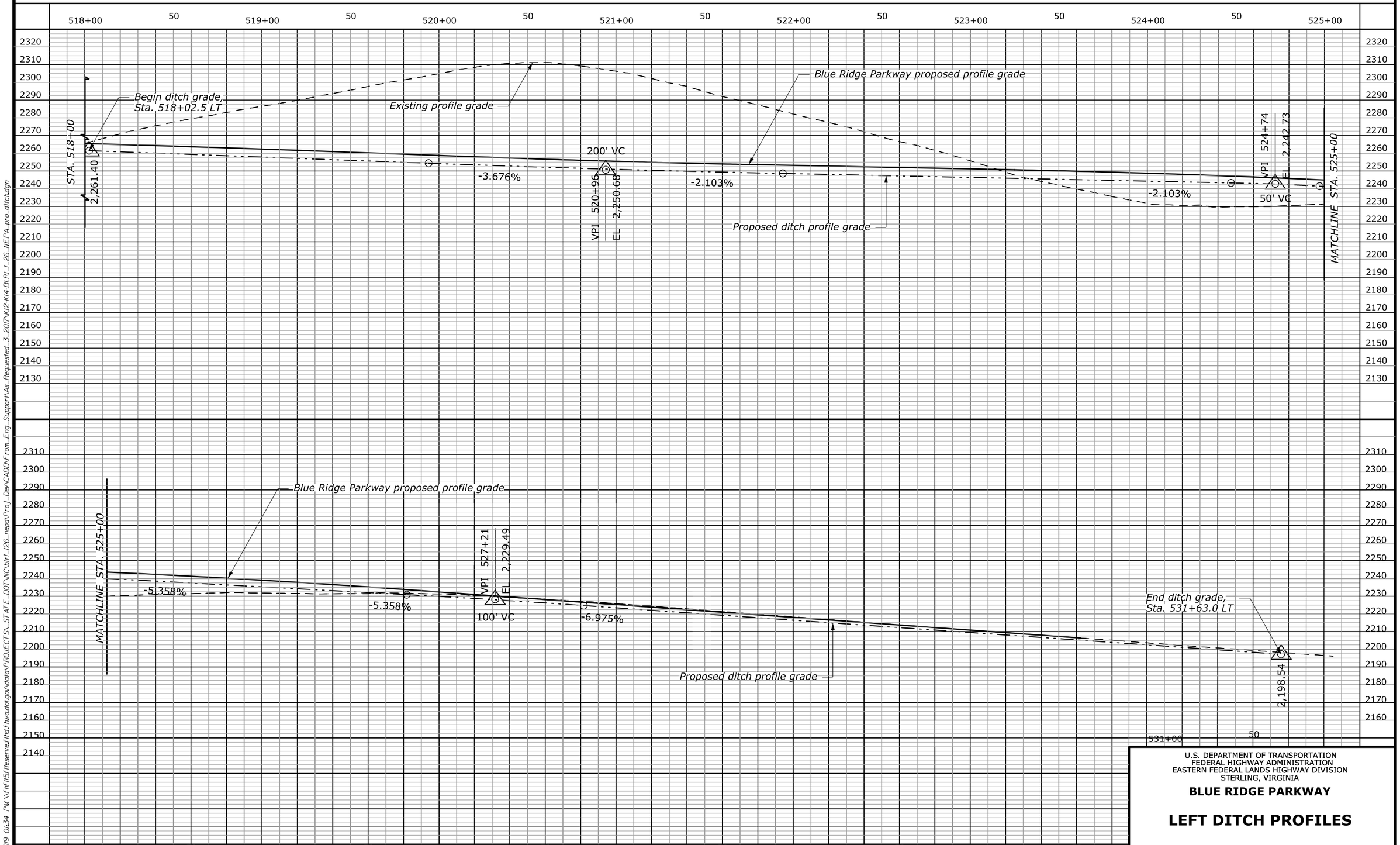

U.S. DEPARTMENT OF TRANSPORTATION
FEDERAL HIGHWAY ADMINISTRATION
EASTERN FEDERAL LANDS HIGHWAY DIVISION
STERLING, VIRGINIA

BLUE RIDGE PARKWAY

LEFT DITCH PROFILES

21-Mar-2019 01:34 PM \\fhfl15fileserve.flhd.fhwa.dot.gov\data\PROJECTS_STATE_DOT\NC\blri_I26_nepa\Proj_Dev\CADD\From_Eng_Support\As_Requested_3_2017\K12-K14-BLRI_I_26_NEPA_pro_ditch.dgn

STATE	PROJECT	SHEET NUMBER
NC	BLRI OVER I-26	K14

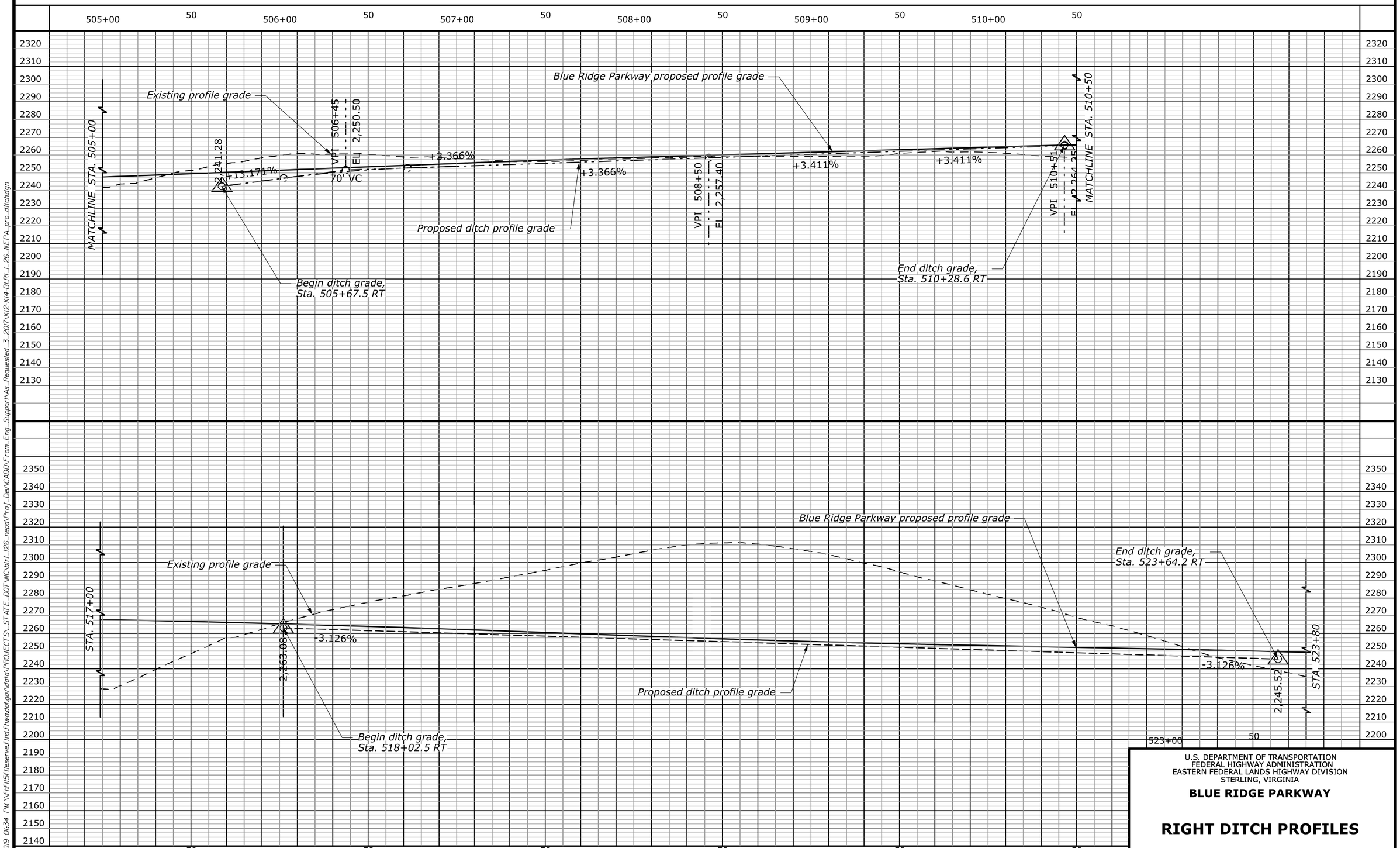

U.S. DEPARTMENT OF TRANSPORTATION
FEDERAL HIGHWAY ADMINISTRATION
EASTERN FEDERAL LANDS HIGHWAY DIVISION
STERLING, VIRGINIA

BLUE RIDGE PARKWAY

RIGHT DITCH PROFILES

21-Mar-2019 01:34 PM \\fhfl15fileserve.fihd.fhwa.dot.gov\data\PROJECTS_STATE_DOT\NC\blri_I26_nepa\Proj_Dev\CADD\From_Eng_Support\As_Requested_3_2017\K12-K14-BLRI_I_26_NEPA_pro_ditch.dgn

STATE	PROJECT	SHEET NUMBER
NC	BLRI OVER I-26	K15

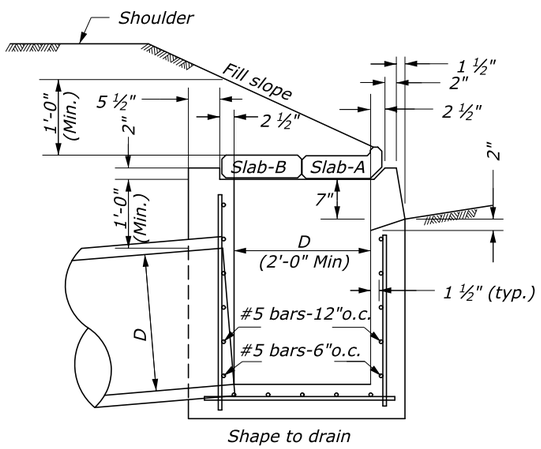

TYPE - 4A

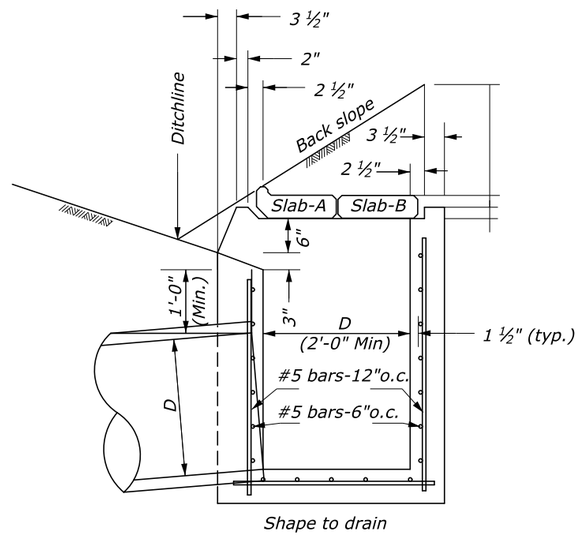

TYPE - 4B

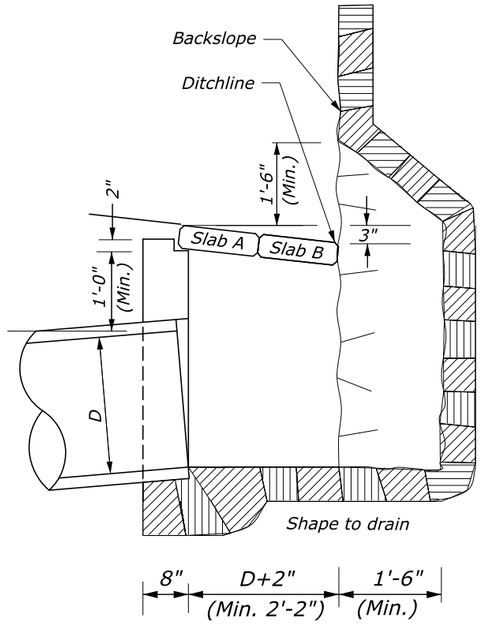

TYPE - 4C

Note:

In rock without backwall or floor.
Reinforce same as Type 4A

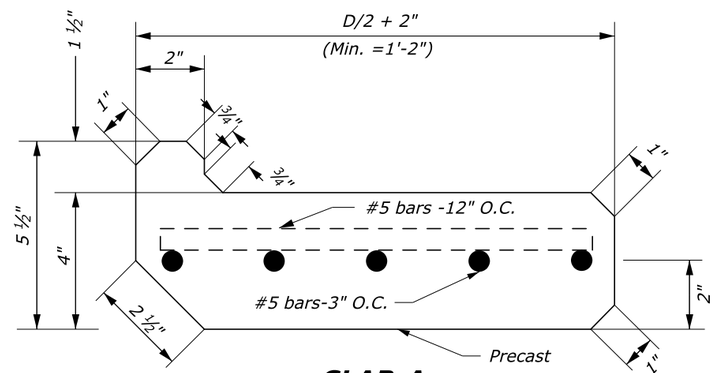

SLAB-A

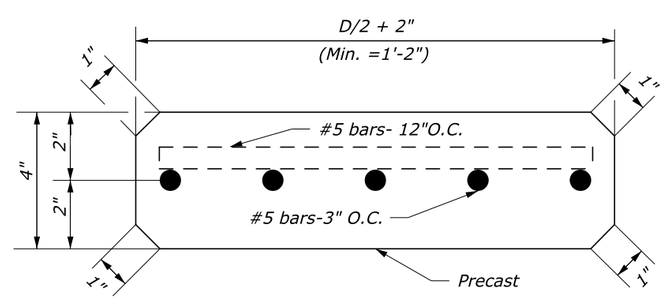

SLAB-B

NOTES:

1. At the option of the Contractor, walls less than 4 feet deep may be of concrete or concrete block.
2. Inlets to be parallel to roadway centerline and grade. For pipes on skew, adjust inlets as directed.
3. Ditch or paved waterways to be warped and widened near inlets as directed by the Engineer, to facilitate drainage and to protect slopes at ends of inlets.
4. For payment purposes, one slab A plus one slab B or two slabs B constitute one concrete cover.

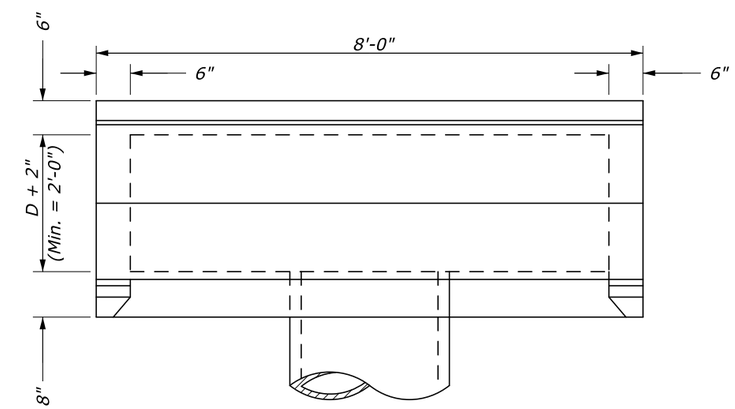

PLAN

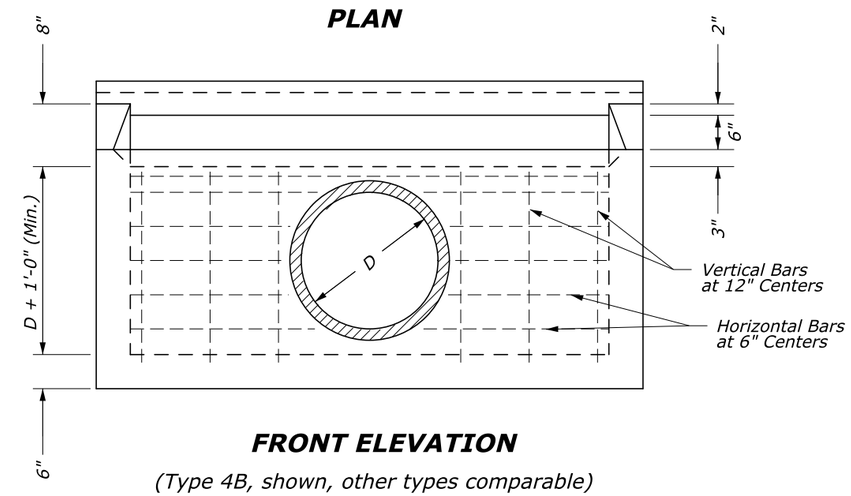

FRONT ELEVATION

(Type 4B, shown, other types comparable)

NO SCALE

U.S. DEPARTMENT OF TRANSPORTATION
FEDERAL HIGHWAY ADMINISTRATION
EASTERN FEDERAL LANDS HIGHWAY DIVISION
STERLING, VIRGINIA

BLUE RIDGE PARKWAY

INLET, TYPE 4A, 4B, and 4C

\\fhf115fileserve.fhd.fhwa.dot.gov\data\PROJECTS_STATE_DOT\NC\blri_i26_nepa\Proj_Dev\CADD\From_Eng_Support\As_Requested_3_2017\K15-NCDOT834A_st6040i_detail.dgn
19-Mar-2019 10:32 AM

STATE	PROJECT	SHEET NUMBER
NC	BLRI OVER I-26	K16

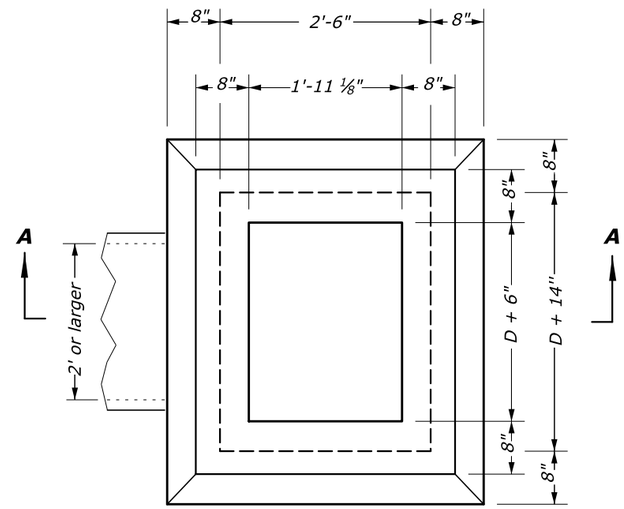

NOTES:

1. At the option of the Contractor walls less than 4 feet may be of either concrete block or concrete as shown.
2. Construct Type 6A-A inlets for pipes 24 inch and larger for "Limited Headroom", unless otherwise directed by the Engineer.
3. Construct inlets parallel to the roadway centerline and grade. For pipes on skew, adapt inlets as directed by the Engineer.
4. Construct ladder rungs of 3/4" round or 3/4" square steel or wrought iron where depth exceeds 4'-0".
5. For frames and gratings, minor variations in design and dimensions are permitted to allow manufacturers standards. All grates are to be bicycle safe.
6. Orient curved vanes toward direction of stormwater flow. In a sump condition, orientation of curved vanes can be in either direction. Contractor is responsible for correct grate orientation towards stormwater flow.
7. Construct Type 6A-6 metal frame and grating for 6" reveal, unless otherwise directed by the Engineer.

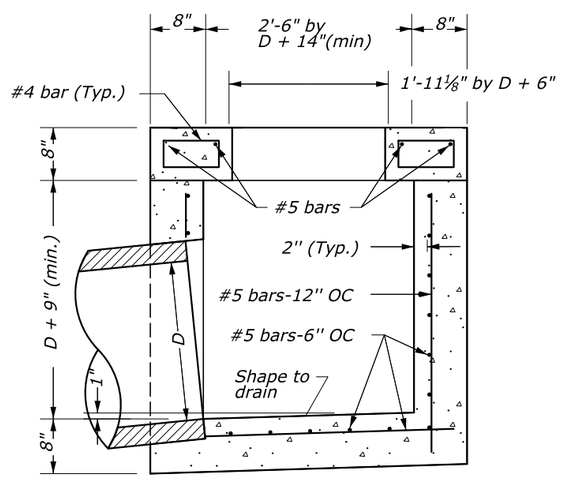

Limited headroom

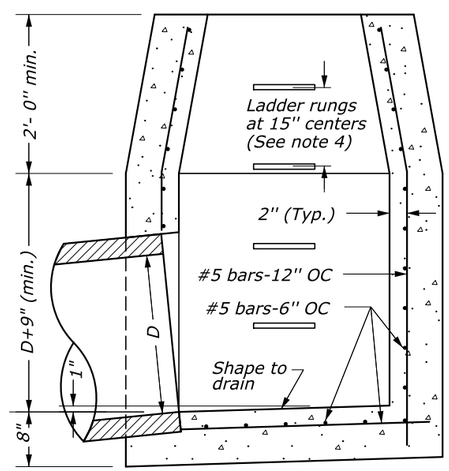

Ample headroom

SECTION A-A

TYPE 6A-6 INLET
(for 24" or larger pipes)

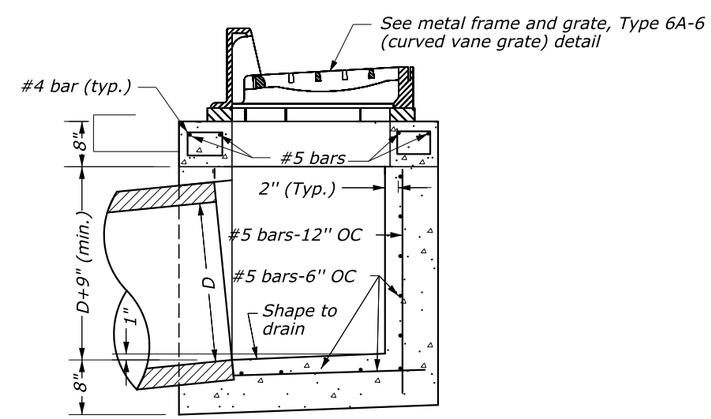

SECTION A-A

TYPE 6A-6 INLET
(up to 24" pipes)

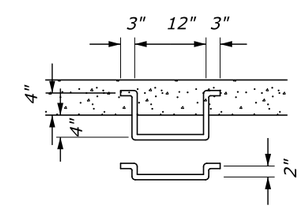

LADDER RUNG

NO SCALE

U.S. DEPARTMENT OF TRANSPORTATION
FEDERAL HIGHWAY ADMINISTRATION
EASTERN FEDERAL LANDS HIGHWAY DIVISION
STERLING, VIRGINIA

BLUE RIDGE PARKWAY

INLET, TYPE 6A-6

\\fhfl15fileserve.fhd.fhwa.dot.gov\data\PROJECTS_STATE_DOT\NC\blri_i26_nepa\Proj_Dev\CADD\From_Eng_Support\As_Requested_3_2017\K16K17-NCDOT834B_st60409_detail.dgn
19-Mar-2019 10:33 AM

STATE	PROJECT	SHEET NUMBER
NC	BLRI OVER I-26	K17

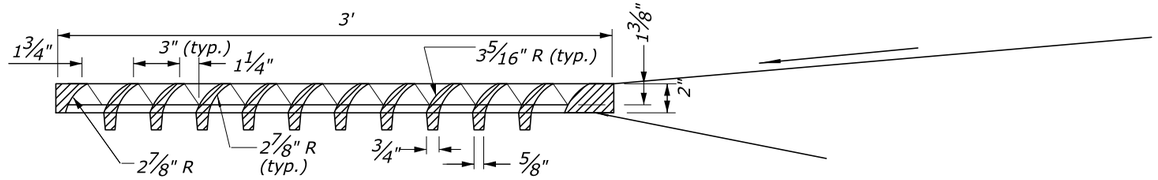

FRONT ELEVATION GRATE TYPE 6A-6 MOUNTED (CURVED VANE GRATINGS)

NOTES:

1. For frames and gratings, minor variations In design and dimensions are permitted to allow manufacturers standards. All grates are to be bicycle safe.
2. Orient curved vanes toward direction of stormwater flow. In a sump condition, orientation of curved vanes can be in either direction. Contractor is responsible for correct grate orientation towards stormwater flow.

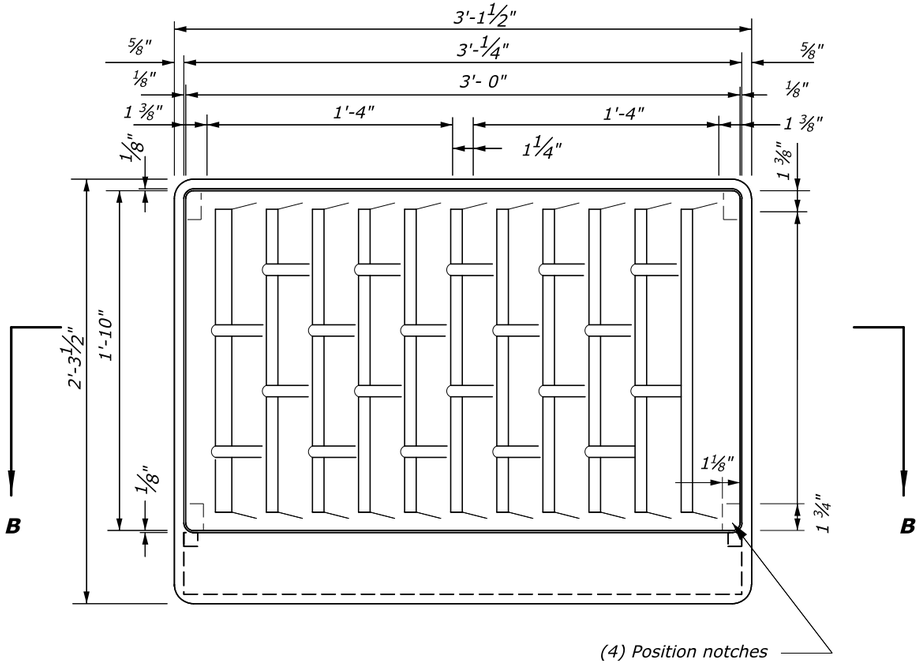

TOP VIEW FRAME GRATE TYPE 6A-6 MODIFIED (CURVED VANE GRATINGS)

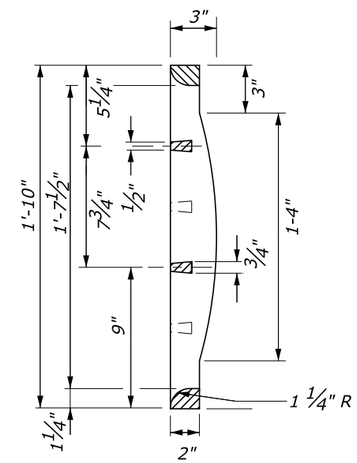

SIDE ELEVATION GRATE TYPE 6A-6 MODIFIED (CURVED VANE GRATINGS)

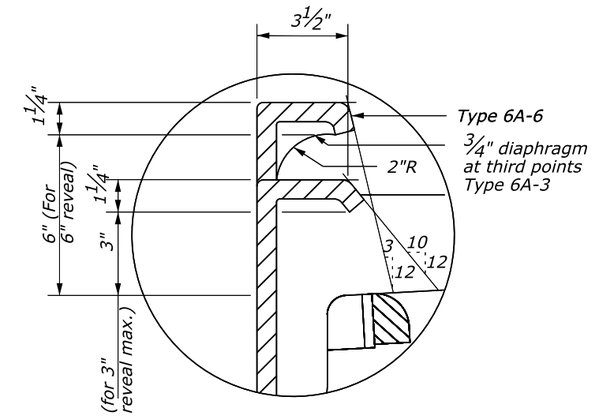

DETAIL A

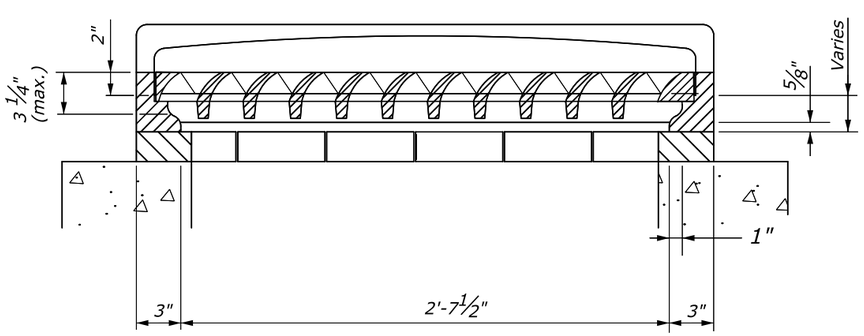

SECTION B-B

METAL FRAMES AND GRATING TYPE 6A-6 MODIFIED

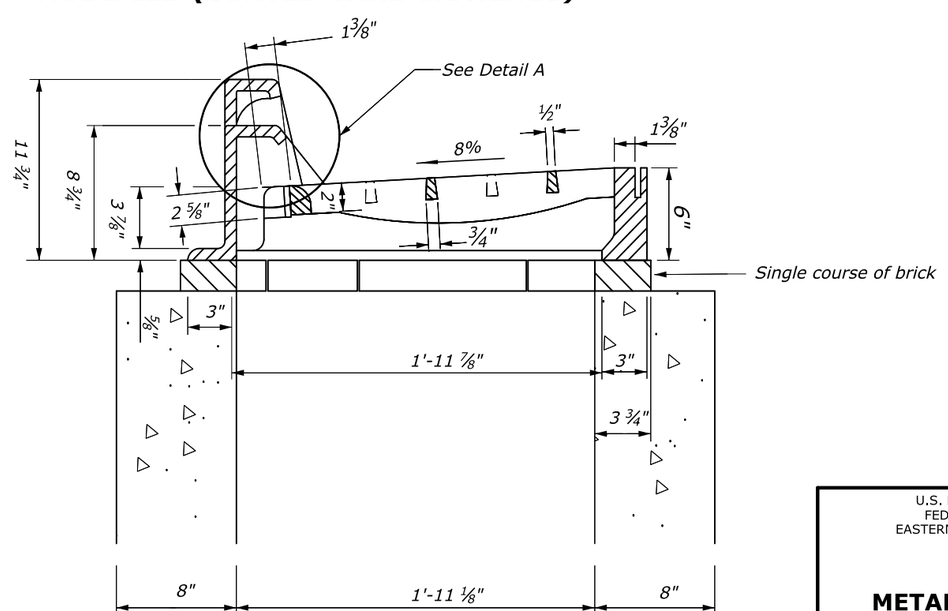

NO SCALE

U.S. DEPARTMENT OF TRANSPORTATION
FEDERAL HIGHWAY ADMINISTRATION
EASTERN FEDERAL LANDS HIGHWAY DIVISION
STERLING, VIRGINIA

BLUE RIDGE PARKWAY

METAL FRAME AND GRATE, TYPE 6A-6 (CURVED VANE GRATE)

19-Mar-2019 10:34 AM \\FHFLSFTIleserve1\hd1fhwa.dot.gov\data\PROJECTS_STATE_DOT\NC\blri_i26_nepo\Proj_Dev\CADD\From_Eng_Support\As_Requested_3_2017\K6\K17-NCDOT834B_st60409_detail.dgn

STATE	PROJECT	SHEET NUMBER
NC	BLRI OVER I-26	K18

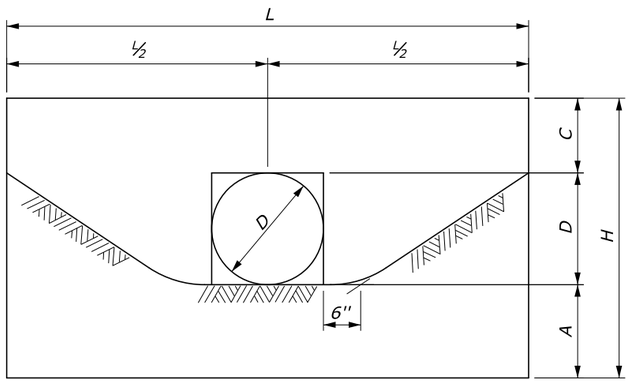

SINGLE

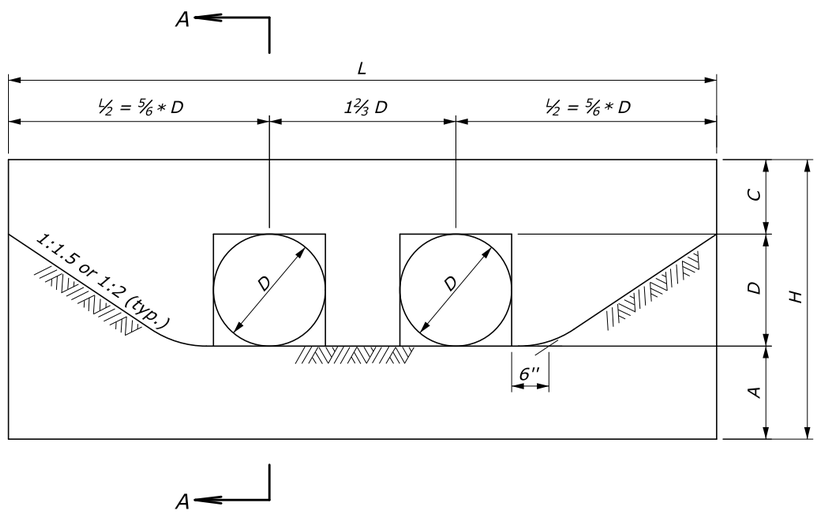

DOUBLE

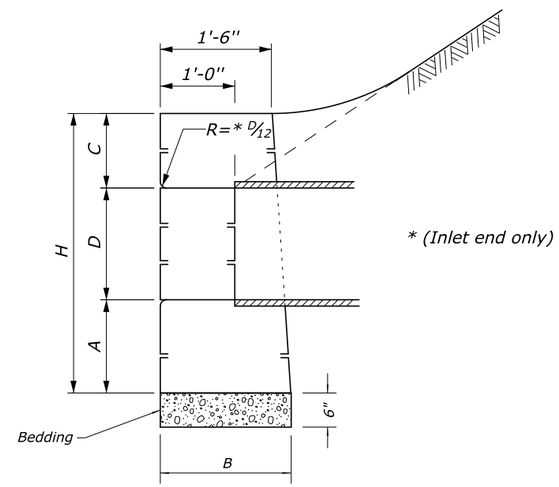

* (Inlet end only)

SECTION A-A

NOTES:

1. All headwalls are oriented parallel to the roadway centerline unless otherwise indicated on the plans or by the Engineer.
2. When pipes are on skew, adapt and lengthen headwalls as directed.
3. Quantities shown in the table are for one headwall with pipe at right angles.
4. Construct headwalls using dimensions shown under values for 1½ :1 slope, unless otherwise designated by the Engineer.
5. Do not exceed the maximum distance of ½-inch between the pipe opening and the face of stone at the vertical horizontal chords of the pipe opening.
6. When constructing headwall, do not place stone joints directly under culverts.

	VALUES FOR 1½: 1 SLOPES								VALUES FOR 2:1 SLOPES							
	SINGLE				DOUBLE				SINGLE				DOUBLE			
D (In.)	18"	24"	30"	36"	18"	24"	30"	36"	18"	24"	30"	36"	18"	24"	30"	36"
L or L'	7'-0"	10'-0"	13'-0"	16'-0"	9'-6"	13'-4"	17'-2"	21'-0"	8'-6"	12'-4"	16'-2"	20'-0"	11'-0"	15'-8"	20'-4"	25'-0"
H	3'-9"	4'-10"	5'-11"	7'-0"	3'-9"	4'-10"	5'-11"	7'-0"	3'-9"	4'-10"	5'-11"	7'-0"	3'-9"	4'-10"	5'-11"	7'-0"
B	1'-9"	2'-0"	2'-5"	2'-10"	1'-9"	2'-0"	2'-5"	2'-10"	1'-9"	2'-0"	2'-5"	2'-10"	1'-9"	2'-0"	2'-5"	2'-10"
A (min.)	1'-3"	1'-6"	1'-9"	2'-0"	1'-3"	1'-6"	1'-9"	2'-0"	1'-3"	1'-6"	1'-9"	2'-0"	1'-3"	1'-6"	1'-9"	2'-0"
C	1'-0"	1'-4"	1'-8"	2'-0"	1'-0"	1'-4"	1'-8"	2'-0"	1'-0"	1'-4"	1'-8"	2'-0"	1'-0"	1'-4"	1'-8"	2'-0"
Stone (CY)	1.45	2.87	5.14"	8.28	1.89	3.66	6.47	10.37	1.78	3.60	6.50	10.53	2.22	4.39	7.83	12.62

U.S. DEPARTMENT OF TRANSPORTATION
FEDERAL HIGHWAY ADMINISTRATION
EASTERN FEDERAL LANDS HIGHWAY DIVISION
STERLING, VIRGINIA

BLUE RIDGE PARKWAY

STONE MASONRY HEADWALLS FOR SMALL PIPE CULVERTS

19-Mar-2019 10:39 AM \\fhfl15fileserve.fhd.fhwa.dot.gov\data\PROJECTS_STATE_DOT\NC\blri_i26_nepa\Proj_Dev\CADD\From_Eng_Support\As_Requested_3_2017\K18-NCDOT877A_st6200I_detail.dgn

PROJECT DESCRIPTION

This project consists of grading, paving, bridge replacement, constructing reinforced soil slopes, drainage improvements and other miscellaneous work on a 0.58 mile segment of roadway near mile marker 391.79 on the Blue Ridge Parkway.

The receiving water is French Broad River.

SUMMARY

Soil disturbing activities will mainly include roadway grading. The total disturbed area for the project is approximately 9.1 acres.

Approximately 0.97 acre of new impervious asphalt surface will be created by the realigned roadway. The Runoff Coefficient prior to construction is 0.30 (woodland). The Runoff Coefficient after construction will be 0.60.

EROSION AND SEDIMENT CONTROLS

Erosion Control and Turf Establishment measures listed in this narrative are defined and outlined in the NCDOT, Releigh Standard Specifications for Roads & Structures and the Special Provision. The attached Erosion and Sediment Control Plan, M06-M31 provides details regarding the installation of the erosion and sediment controls.

Temporary Best Management Practices (BMP) to reduce erosion as a result of project work will be implemented in conjunction with the construction of this project. These include:

- *Install wire-backed silt fence in all areas of ground disturbance where sheet flow may cause erosion, particularly at the toe of fills. Coordinate the installation, use, and removal of erosion and sediment control measures with roadway activities to assure economical, effective, and continuous erosion and sediment control.*
- *Employ temporary stabilization practices in incremental stages as construction proceeds.*
- *Install all erosion and sediment control measures as directed by the Engineer. Do not modify the type, size, or location of any control or practice without prior approval from the Engineer.*
- *Do not drive construction equipment across flowing waterways.*
- *Do not allow construction vehicles to track sediment outside the project limits.*
- *Do not allow any construction equipment to operate on or access the down-slope side of the perimeter control measures.*
- *Direct storm water to vegetated buffer areas and do not discharge directly into surface waters.*
- *Inspect and maintain regularly all mechanized equipment used in or near surface waters to prevent contamination of stream waters from fuels, lubricants, hydraulic fluids, or other toxic materials.*
- *In general, preserve existing vegetation, trees, and shrubs.*
- *Stockpile topsoil stripped from the construction area in an area that will not interfere with construction phases. Cover stockpiled soil with plastic or surround it with silt fence.*
- *Provide watering for dust control within the construction limits, on active haul roads, and in pits and staging areas.*
- *Solid waste resulting from the construction will consist of construction debris, garbage, and empty containers. Collect and store all waste in dumpsters, or in metal or plastic drums as appropriate.*
- *Hazardous waste will not be generated from normal construction activities. Equipment fueling and maintenance could generate spills, leaks, and hazardous wastes like motor oil, diesel, gasoline, and battery fluid. If feasible, conduct these activities in a covered area to avoid contact with storm water. Store all hazardous waste materials in appropriate and clearly marked containers away from other non-waste materials. Do not dispose of hazardous waste materials into the on-site dumpsters. Dispose of material according to Federal, State, and local regulations.*
- *Report spills large enough to discharge to surface water to the National Response Center (NRC) at 1-800-424-8802 or 1-202-267-2675.*

After the completion of roadway construction and culvert replacement, do the following as directed by the Engineer to permanently stabilize disturbed areas:

- *Where necessary, replace eroded topsoil and re-apply permanent turf establishment to disturbed areas where vegetation has not established*
- *Inspect, clean, and repair all culvert outlet protection, riprap basins, and stabilized riprap slopes*
- *Remove all devices used for dewatering*
- *Remove silt fence after all upslope areas are stabilized and vegetation is well established.*
- *Stabilize all areas that are disturbed due to the removal of sediment control devices*

VEGETATIVE STABILIZATION

Stabilize 9.1 acres as a result of this project. The area will be prepared for turf establishment with topsoil and mulch. In accordance with the Special Provision, apply seed at the rates as shown below:

TABLE 1
TEMPORARY TURF ESTABLISHMENT

SCIENTIFIC NAME	COMMON NAME	RATE [LBS PER AC]
Secale cereal	Cereal rye	20

TABLE 2
PERMANENT VEGETATION ESTABLISHMENT - MEADOW SEED MIX

CATEGORY	SCIENTIFIC NAME	COMMON NAME	LB OF SEED PER ACRE	TOTAL LBS OF SEED FOR 9 ACRES INSTALLED OUTSIDE OF JUNE-OCT	LBS FOR 15% SUPPLY TO NPS (FOR 9 ACRES TOTAL REVEG AREA
Grasses	Elymus virginicus	Virginia wildrye	4.18	37.64	5.65
	Schizachyrium scoparium	Little bluestem	0.43	3.90	0.59
	Andropogon gerardii	Big bluestem	0.73	6.53	0.98
	Tridens flavus	Purpletop	0.37	3.37	0.51
	Juncus tenuis	Pathrush	0.02	0.16	0.02
	Deschampsia flexuosa	Hair grass	0.08	0.75	0.11
	Sorghastrum nutans	Indiangrass	0.80	7.17	1.08
	Panicum anceps	Beaked panic grass	0.21	1.86	0.28
	Dichanthelium clandestinum	Deer tongue	0.48	4.36	0.65
	Saccharum giganteum	Beard grass	0.70	6.27	0.94
Forbes	Parthenium integrifolium	Feverfew	1.24	11.20	1.68
	Monarda fistulosa	Wild bergamot	0.12	1.12	0.17
	Chamaecrista fasciculata	Partridge pea	6.45	58.08	8.71
	Lespedeza capitata	Round-headed bushclover	0.54	4.90	0.74
	Geranium maculatum	Wild geranium	2.18	19.60	2.94
	Penstemon laevigatus	Appalachian beardtongue	0.45	4.09	0.61
	Solidago rugosa	Wrinkle leaf goldenrod	0.03	0.31	0.05
	Rudbeckia triloba	Brown-eyed susan	0.20	1.76	0.26
	Symphyotrichum laevis	Smooth blue aster	0.14	1.24	0.19
	Asclepias syriaca	Common milkweed	1.49	13.44	2.02
	Tradescantia subaspera	Spiderwort	0.80	7.17	1.08
	Desmodium paniculatum	Panicleleaf ticktrefoil	0.70	6.27	0.94
	Senna hebecarpa	Wild senna	1.70	15.30	2.29
	Pycnanthemum muticum	Mountain mint	0.01	0.08	0.01
Shurb	Rosa carolina	Carolina rose	0.87	7.84	1.18
	Ceanothus americanus	New Jersey Tea	0.29	2.58	0.39

U.S. DEPARTMENT OF TRANSPORTATION
FEDERAL HIGHWAY ADMINISTRATION
EASTERN FEDERAL LANDS HIGHWAY DIVISION
STERLING, VIRGINIA

EROSION & SEDIMENT CONTROL NARRATIVE

M:\PROJECTS_STATE_DOT\NC\blri_I26_nepa\Proj_Dev\CADD\From_Eng_Support\As_Requested_3_2017\M01-M05-BLRI_I_26_NEPA_sec_nar.dgn
12-Dec-2018 12:08 PM

TABLE 3
ROAD SHOULDER MIX

SCIENTIFIC NAME	COMMON NAME	LBS/ACRE	TOTAL FOR 2.5 ACRES
Agrostis perennans	Autumn bentgrass	0.27	0.68
Deschampsia flexuosa	Hair grass	0.70	1.74
Tridens flavus	Purpletop	5.81	14.52
Juncus tenuis	Pathrush	0.07	0.16
Schizachyrium scoparium	Little bluestem	3.35	8.38
Total		**10**	**25**

In accordance with the Special Provisions, apply mulch at the following rates:

Mulch	Rate (pounds per acre)
Wood Fiber Mulch	5000 (1 to 2 inch mat)

EROSION & SEDIMENT CONTROL CONSTRUCTION SEQUENCE

PHASE I Establish Perimeter Controls

Prior to any clearing, grubbing, and excavation, construct perimeter controls to ensure that disturbed sediment does not leave the project site. Perimeter controls include silt fence and other approved measures outside the construction limits.

PHASE II- Intermediate Controls

Apply intermediate controls during rough grading operations. Construct access roads as directed by the Engineer. Install wire-backed silt fence and special silt fence in areas called out on the Erosion and Sediment Control Plans. Install wattles in ditches along the roadway. Obtain the Engineer's approval before installing any control not specified in the SWPPP/ECN.

The Engineer may direct the installation of certain controls in order to forestall or mitigate potential or existing erosion problems.

Apply temporary turf establishment in completed disturbed areas that will remain exposed for over 7 calendar days, or as directed by the Engineer.

As soon as practical, but not to exceed 7 calendar days, apply permanent turf establishment to the finished slopes according to Section 1660.

At the end of each day's grading operations, shape earthwork to minimize and control erosion from storm runoff.

Do not allow ponded water to encroach into the travel lanes.

Provide silt fence around all stockpiled excavated roadway material.

Apply temporary turf establishment to stockpiles remaining in place longer than 14 days, or when directed by the Engineer.

Only disturb areas that can be stabilized at the end of the day. Apply permanent turf establishment to the finished slopes according to the Special Provisions.

Provide watering for dust control within the construction limits, on active haul roads, in pits and staging areas.

PHASE III- Final Construction / Stabilization

After completion of roadway construction do the following as directed by the Engineer:

- *Finish grading, place riprap, and apply permanent turf establishment to any remaining disturbed areas as shown on the Plans and Special Provisions.*
- *Remove access road and stabilize areas as shown on the Plans.*
- *Where necessary, replace eroded topsoil and re-apply permanent turf establishment to disturbed areas where vegetation has not established.*
- *Remove silt fence only after all upslope areas are stabilized and vegetation is well established.*
- *Remove all other perimeter controls when directed by the Engineer.*

Where necessary, replace eroded topsoil and re-apply permanent turf establishment to disturbed areas where vegetation was not established. Inspect, clean and repair inlet protection, riprap basins and stabilized channels.

MAINTENANCE AND INSPECTION PROCEDURES

Silt fence - Inspect for buildup of excess sediment, undercutting, sags, and other failures. If the fabric becomes damaged, repair or replace as necessary. Remove sediment from behind the silt fence when it becomes 0.5 feet deep at the fence.

Wattle Check Dam - Remove sediment at the base of the roll when it has reached 1/3 of the exposed height of the roll, or as directed by the Engineer.

Erosion Control Matting (Rolled Erosion Control Product) - Unroll and lay matting out down slope face (in direction of flow). Anchor at top of slope. Do not stretch matting. For culvert inlets and ditches, install matting along the bottom of the ditches first and then up the side slopes.

Inlet protection - Inspect to ensure that inlet protections remain firmly in place and are not damaged or clogged. Clean clogged inlet protections or replace clogged or damaged inlet protections as necessary.

Gravel construction entrance - Inspect gravel construction entrances every seven days. Check for mud/sediment buildup and pad integrity. Wash, replace, or add stone whenever the entrance fails to perform effectively. Immediately brush or sweep up soil that has been tracked offsite onto the roadway for proper disposal.

Temporary slope drains - Inspect the slope drain and supporting diversion after every rainfall, and promptly make necessary repairs. When the protected area has been permanently stabilized, temporary measures may be removed, materials disposed of properly and all disturbed areas stabilized appropiately. If visible sedimentation is found off-site, take immediate measure to clean up the site.

Temporary riser basin - Inspect basin and riser on a regular basis and after every significant rainfall event (1/2-inch or greater). Inspect riser for proper operation. Remove debris from around the riser or the trash rack. Check the skimmer for proper functioning and verify that it is not clogged with sediment. Make sure the vent pipe on the skimmer is turned upright. Inspect the barrel for seepage around the pipe at outlet. Inspect the embankment, baffles, overflow spillway and outlet for erosion damage. At a minimum, remove sediment when the basin volume reaches 50% of the total storage volume and as needed.

Construction road stabilization - Inspect construction roads and parking areas periodically for condition of surface. Topdress with new gravel as needed. Check road ditches and other seeded areas for erosion and sedimentarion after every significant rainfall event (1/2-inch or greater). Maintain all vegetation in healthy, vigorous condition. Sediment-producing areas should be treated immediately.

Temporary earth berm- Inspect after every rainfall event regardless of storm events and at least once every two weeks. Ensure runoff is diverted at the outl of the earth berm as designed. No vehicular or construction traffic will be allow to travel across or near the earth berms.

Maintain written records of inspection and repairs.

Record the inspection date and summary of findings within 24 hours of completing a site inspection.

Provide the Engineer with copies of the inspection and maintenance records every month, and at the completion of the project.

U.S. DEPARTMENT OF TRANSPORTATION
FEDERAL HIGHWAY ADMINISTRATION
EASTERN FEDERAL LANDS HIGHWAY DIVISION
STERLING, VIRGINIA

EROSION & SEDIMENT CONTROL NARRATIVE

M:\PROJECTS_STATE_DOT\NC\blrl_i26_repo\Proj_Dev\CADD\From_Eng_Support\As_Requested_3_2017\M01-M05-BLRI_I_26_NEPA_sec_narr.dgn
14-Dec-2018 05:31 AM

Major Elements of DWQ Construction General Permit

This document contains the major elements of the recently-revised North Carolina Division of Water Quality (DWQ) Construction General Permit (NCG01) with emphasis placed on those elements that differ from the previous permit (expiration on August 2, 2011). Since the summary list below cannot contain details of every change, the complete Permit should be used to assure full implementation. See: http://portal.ncdenr.org/web/wq/ws/su/construction

1) Ground Stabilization*

Site Area Description	Stabilization Time Frame	Stabilization Time Frame Exceptions
• Perimeter dikes, swales, ditches and slopes	7 days	None
• High Quality Water (HQW) Zones	7 days	None
• Slopes steeper than 3:1	7 days	If slopes are 10' or less in length and are not steeper than 2:1, 14 days are allowed.
• Slopes 3:1 or flatter	14 days	7-days for slopes greater than 50 feet in length
• All other areas with slopes flatter than 4:1	14 days	None (except for perimeters and HQW Zones)

* "Extensions of time may be approved by the permitting authority based on weather or other site-specific conditions that make compliance impracticable." (Section II.B(2)(b))

The major change in the Permit from the previous one is the shorter times to apply ground stabilization such as mulch, wheat straw, or grasses. The NC laws and rules relating to the Sediment Act require, in most places, ground stabilization within 21 days. Based on the new EPA requirements and 9-months' work with a permit advisory group, CTAG, the Division and EPA-developed permit, now contains requirements for ground cover within 14, and in some places, 7 days.

2) Building Wastes Handling

- No paint or liquid wastes in stream or storm drains
- Dedicated areas for demolition, construction and other wastes must be located 50' from storm drains and streams unless no reasonable alternatives available.
- Earthen-material stockpiles must be located 50' from storm drains and streams unless no reasonable alternatives available.
- Concrete materials must be controlled to avoid contact with surface waters, wetlands, or buffers.

3) Discharges to Federally-listed Waters

- Requirements are the same as in previous permit.
- The permit allows reduction from the 20 acre minimum if the Director of DWQ determines that other BMPs provide equivalent protection.

4) Inspections

- Same weekly inspection requirements
- Same rain gauge & inspections after 0.5" rain event
- Inspections are only required during "normal business hours"
- Inspection reports must be available on-site during business hours unless a site-specific exemption is approved.
- Records must be kept for 3 years and available upon request.
- Electronically-available records may be substituted under certain conditions.

5) Implementation of New Permit Conditions

- Projects permitted under the previous permit can continue to follow the previously-permitted conditions.
- Complete applications received prior to August 3, 2011 can follow conditions of approved application.
- Applications received after August 2, 2011 must comply with new permit conditions.

6) Conditions in Erosion & Sedimentation Control Plans*

Designation on the plans where the 7 and 14-day ground stabilization requirements of the NPDES permit apply

Designation on the plans where basins that comply with the surface-withdrawal requirements of the NPDES permit are located.

7) Building Wastes Handling

- No paint or liquid wastes in stream or storm drains
- Dedicated areas for demolition, construction and other wastes located 50' from storm drains and streams unless no reasonable alternatives are available.
- Earthen-material stockpiles located 50' from storm drains unless no reasonable alternatives available.
- Concrete materials must be controlled to avoid contact with surface waters, wetlands, or buffers.

8) Sediment Basins

- Outlet structures must withdraw from basin surface unless drainage area is less than 1 acre.
- Use only DWQ-approved flocculants.

* In order for the E&SC Plan to satisfy the conditions of the Construction General permit, it must identify areas where the ground stabilization requirements apply and the location of the basins where the surface-withdrawal requirements apply.

NOTE:
Slope notation in table above is 1H (horizontal) :1V (Vertical).

U.S. DEPARTMENT OF TRANSPORTATION
FEDERAL HIGHWAY ADMINISTRATION
EASTERN FEDERAL LANDS HIGHWAY DIVISION
STERLING, VIRGINIA

EROSION & SEDIMENT CONTROL NARRATIVE

21-Dec-2018 02:28 PM M:\PROJECTS_STATE_DOT\NC\blri_126_nepa\Proj_Dev\CADD\From_Eng_Support\As_Requested_3_2017\M01-M05-BLRI_I_26_NEPA_ec_nar.dgn

STATE	PROJECT	SHEET NUMBER
NC	BLRI OVER I-26	M04

Soil Map—Buncombe County, North Carolina

Map Scale: 1:3,650 if printed on B landscape (17" x 11") sheet.

N

Meters: 0 50 100 200 300

Feet: 0 150 300 600 900

Map projection: Web Mercator Corner coordinates: WGS84 Edge tics: UTM Zone 17N WGS84

USDA **Natural Resources Conservation Service**

Web Soil Survey
National Cooperative Soil Survey

M:\PROJECTS_STATE_DOT\NC\blri_I26_nepa\Proj_Dev\CADD\From_Eng_Support\As_Requested_3_2017\M01-M05-BLRI_I_26_NEPA_ac_hor.dgn
21-Dec-2018 02:28 PM

MAP LEGEND

Area of Interest (AOI)

- Area of Interest (AOI)

Soils

- Soil Map Unit Polygons
- Soil Map Unit Lines
- Soil Map Unit Points

Special Point Features

- Blowout
- Borrow Pit
- Clay Spot
- Closed Depression
- Gravel Pit
- Gravelly Spot
- Landfill
- Lava Flow
- Marsh or swamp
- Mine or Quarry
- Miscellaneous Water
- Perennial Water
- Rock Outcrop
- Saline Spot
- Sandy Spot
- Severely Eroded Spot
- Sinkhole
- Slide or Slip
- Sodic Spot
- Spoil Area
- Stony Spot
- Very Stony Spot
- Wet Spot
- Other
- Special Line Features

Water Features

- Streams and Canals

Transportation

- Rails
- Interstate Highways
- US Routes
- Major Roads
- Local Roads

Background

- Aerial Photography

Map Unit Legend

Buncombe County, North Carolina (NC021)			
Map Unit Symbol	**Map Unit Name**	**Acres in AOI**	**Percent of AOI**
CsC	Clifton sandy loam, 8 to 15 percent slopes	13.3	13.4%
CsD	Clifton sandy loam, 15 to 30 percent slopes	27.0	27.2%
CuC	Clifton-Urban land complex, 8 to 15 percent slopes	1.4	1.5%
CuD	Clifton-Urban land complex, 15 to 30 percent slopes	4.5	4.5%
EwC	Evard-Cowee complex, 8 to 15 percent slopes, stony	1.9	1.9%
EwD	Evard-Cowee complex, basin, 15 to 30 percent slopes, stony	4.6	4.6%
EwE	Evard-Cowee complex, basin, 30 to 50 percent slopes, stony	25.9	26.1%
TaC	Tate loam, 8 to 15 percent slopes	0.1	0.1%
TaD	Tate loam, 15 to 30 percent slopes	1.5	1.5%
TmC	Tate-Urban land complex, 8 to 15 percent slopes	3.4	3.4%
TmD	Tate-Urban land complex, 15 to 30 percent slopes	0.8	0.8%
UhE	Udorthents-Urban land complex, 2 to 50 percent slopes	14.8	15.0%
Totals for Area of Interest		**99.1**	**100.0%**

U.S. DEPARTMENT OF TRANSPORTATION
FEDERAL HIGHWAY ADMINISTRATION
EASTERN FEDERAL LANDS HIGHWAY DIVISION
STERLING, VIRGINIA

EROSION & SEDIMENT CONTROL NARRATIVE

21-Dec-2018 02:29 PM M:\PROJECTS\STATE_DOT\NC\blri_I26_nepa\Proj_Dev\CADD-From_Eng_Support\As_Requested_3_2017\M01-M05-BLRI_I_26_NEPA_ec_nar.dgn

STATE	PROJECT	SHEET NUMBER
NC	BLRI OVER I-26	M06

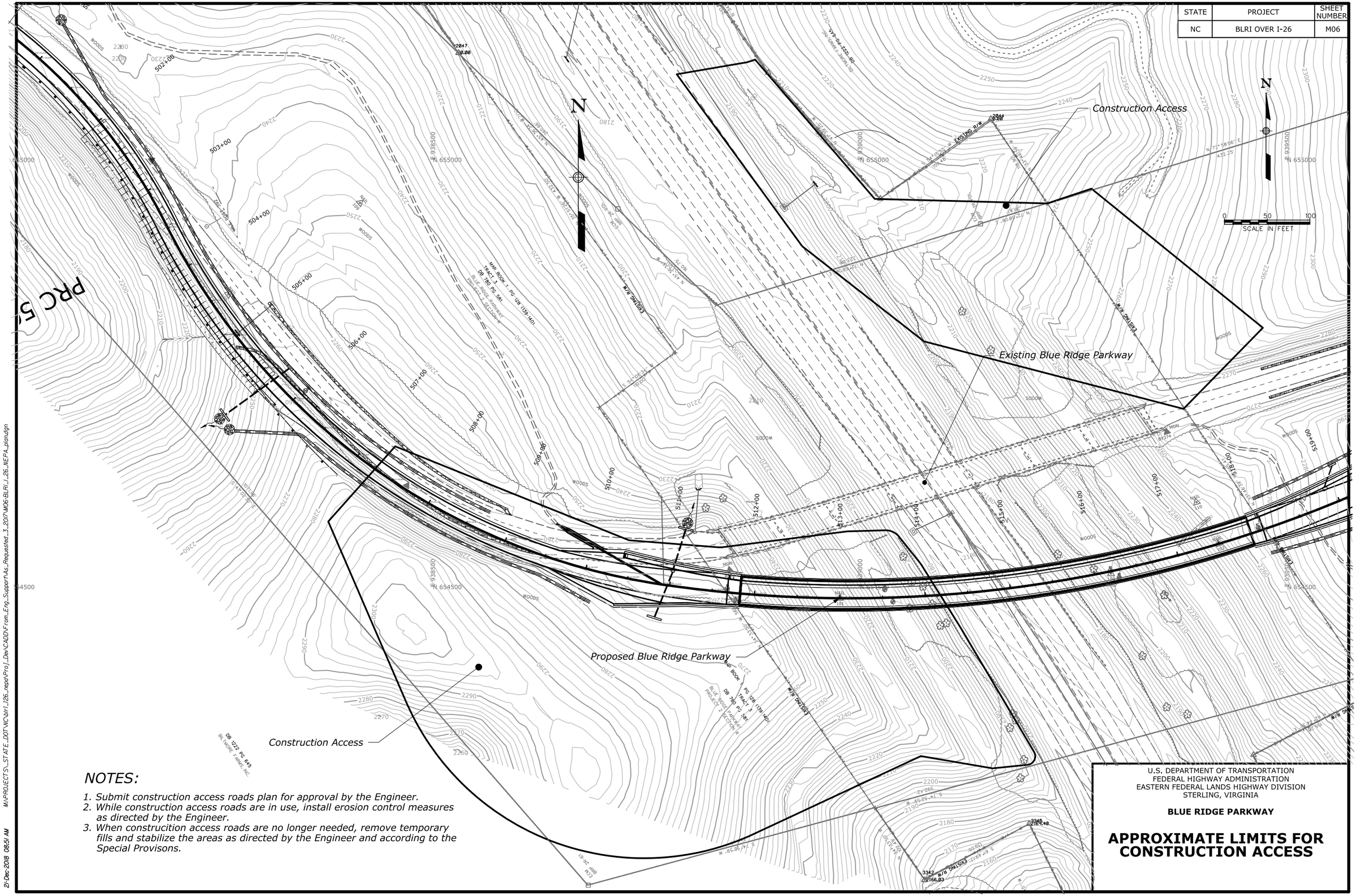

NOTES:

1. Submit construction access roads plan for approval by the Engineer.
2. While construction access roads are in use, install erosion control measures as directed by the Engineer.
3. When construcition access roads are no longer needed, remove temporary fills and stabilize the areas as directed by the Engineer and according to the Special Provisons.

U.S. DEPARTMENT OF TRANSPORTATION
FEDERAL HIGHWAY ADMINISTRATION
EASTERN FEDERAL LANDS HIGHWAY DIVISION
STERLING, VIRGINIA

BLUE RIDGE PARKWAY

APPROXIMATE LIMITS FOR CONSTRUCTION ACCESS

M:\PROJECTS_STATE_DOT\NC\blri-126_repo\Proj_Dev\CADD\From_Eng_Support\As_Requested_3_20\M06-BLRI_I_26_NEPA_plan.dgn

21-Dec-2018 08:51 AM

STATE	PROJECT	SHEET NUMBER
NC	BLRI OVER I-26	M07

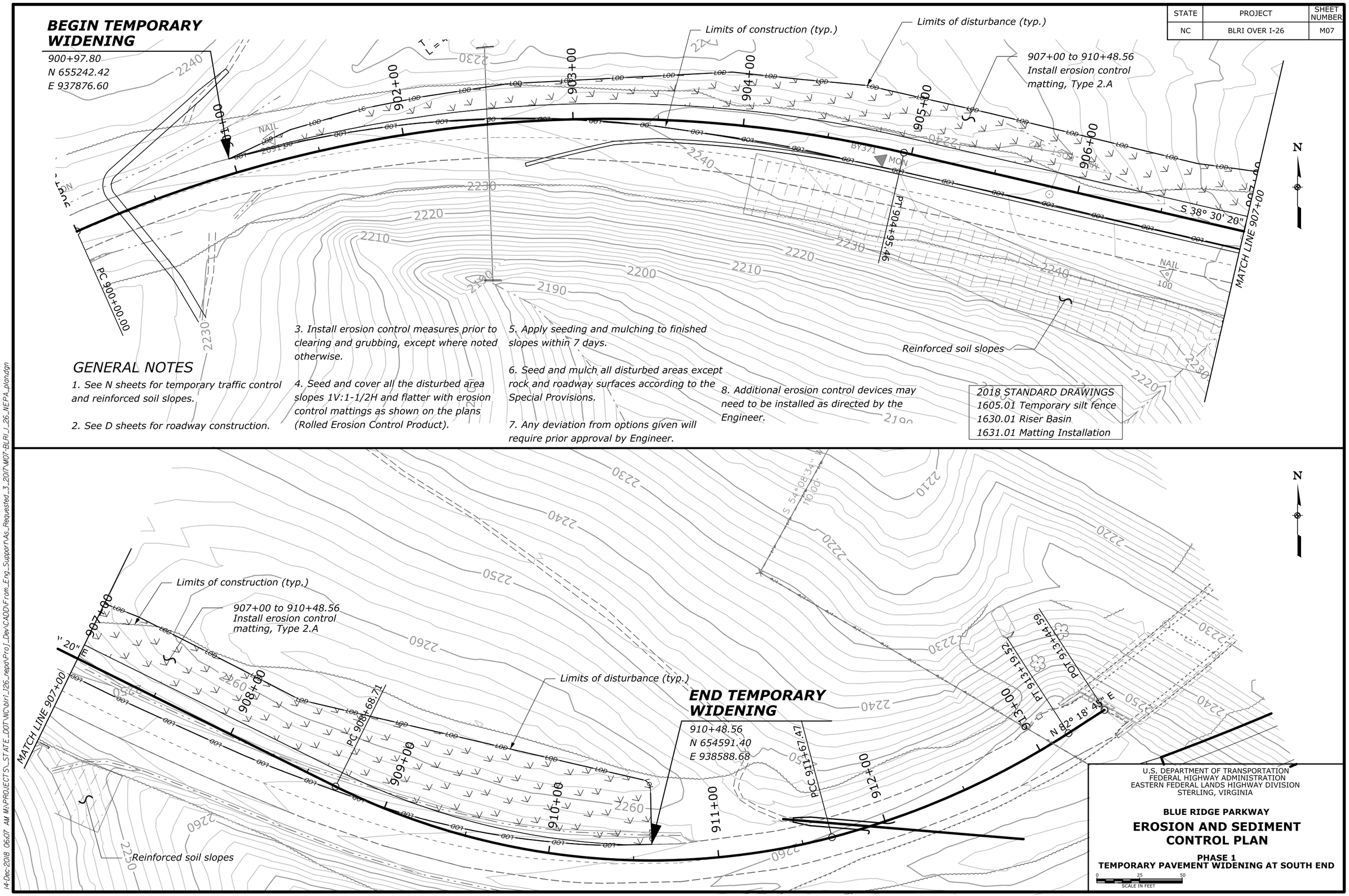

GENERAL NOTES

1. See N sheets for temporary traffic control and reinforced soil slopes.

2. See D sheets for roadway construction.

3. Install erosion control measures prior to clearing and grubbing, except where noted otherwise.

4. Seed and cover all the disturbed area slopes 1V:1-1/2H and flatter with erosion control mattings as shown on the plans (Rolled Erosion Control Product).

5. Apply seeding and mulching to finished slopes within 7 days.

6. Seed and mulch all disturbed areas except rock and roadway surfaces according to the Special Provisions.

7. Any deviation from options given will require prior approval by Engineer.

8. Additional erosion control devices may need to be installed as directed by the Engineer.

2018 STANDARD DRAWINGS
1605.01 Temporary silt fence
1630.01 Riser Basin
1631.01 Matting Installation

U.S. DEPARTMENT OF TRANSPORTATION
FEDERAL HIGHWAY ADMINISTRATION
EASTERN FEDERAL LANDS HIGHWAY DIVISION
STERLING, VIRGINIA

BLUE RIDGE PARKWAY

EROSION AND SEDIMENT CONTROL PLAN

PHASE 1
TEMPORARY PAVEMENT WIDENING AT SOUTH END

0 25 50
SCALE IN FEET

14-Dec-2018 06:07 AM M:\PROJECTS_STATE_DOT\NC\blri_i26_nepa\Proj_Dev\CADD\From_Eng_Support\As_Requested_3_2017\M07-BLRI_I_26_NEPA_plan.dgn

STATE	PROJECT	SHEET NUMBER
NC	BLRI OVER I-26	M08

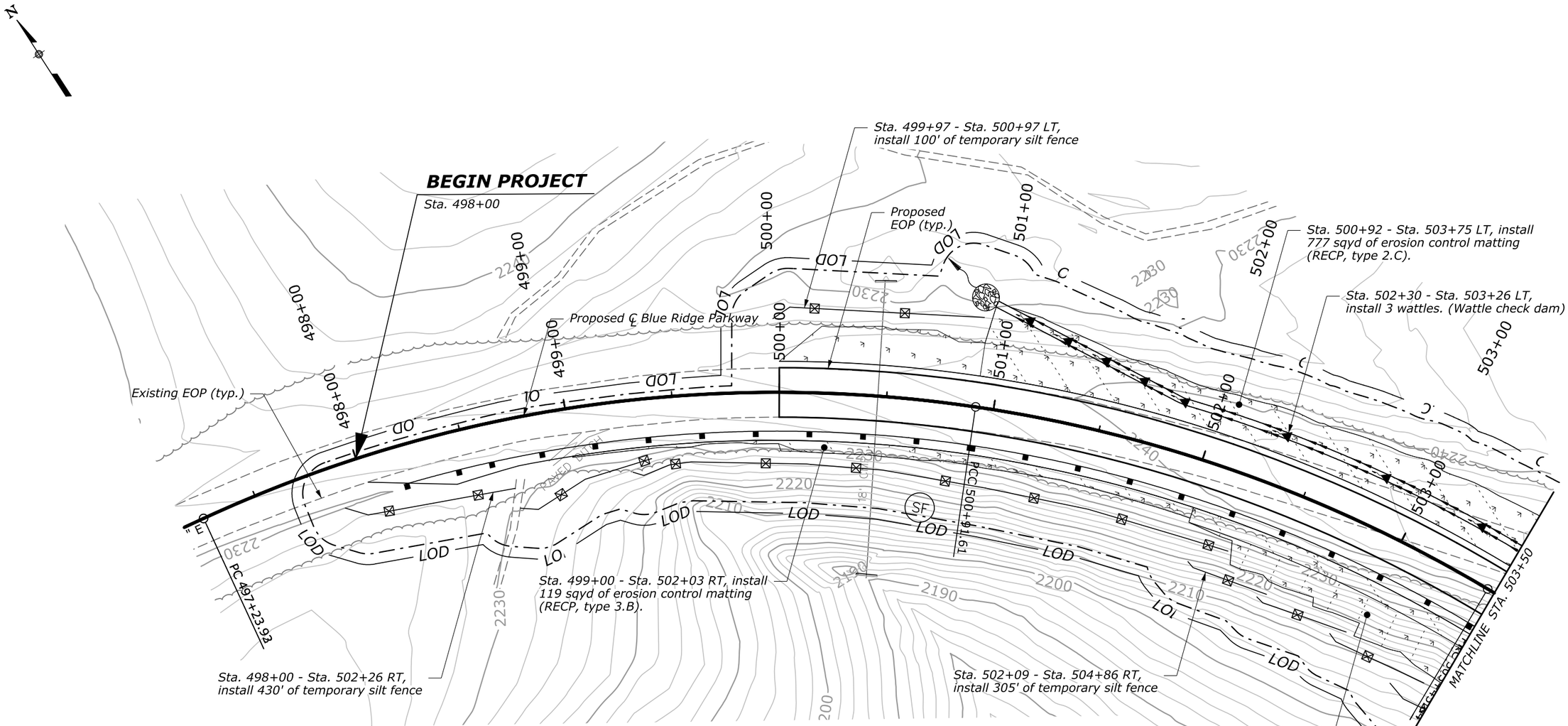

2018 STANDARD DRAWINGS
1605.01 Temporary silt fence
1630.01 Riser Basin
1631.01 Matting Installation

0 25 50
SCALE IN FEET

U.S. DEPARTMENT OF TRANSPORTATION
FEDERAL HIGHWAY ADMINISTRATION
EASTERN FEDERAL LANDS HIGHWAY DIVISION
STERLING, VIRGINIA

BLUE RIDGE PARKWAY

EROSION AND SEDIMENT CONTROL PLAN

PHASE 2
SOUTH REINFORCED SOIL SLOPE CONSTRUCTION

14-Mar-2019 03:43 PM\\fhfil5fileserve.fhd.fhwa.dot.gov\data\PROJECTS_STATE_DOT\NC\blri_i26_nepa\Proj_Dev\CADD\From_Eng_Support\As_Requested_3_2017\M08-MI3-BLRI_I_26_NEPA_plan.dgn

STATE	PROJECT	SHEET NUMBER
NC	BLRI OVER I-26	M09

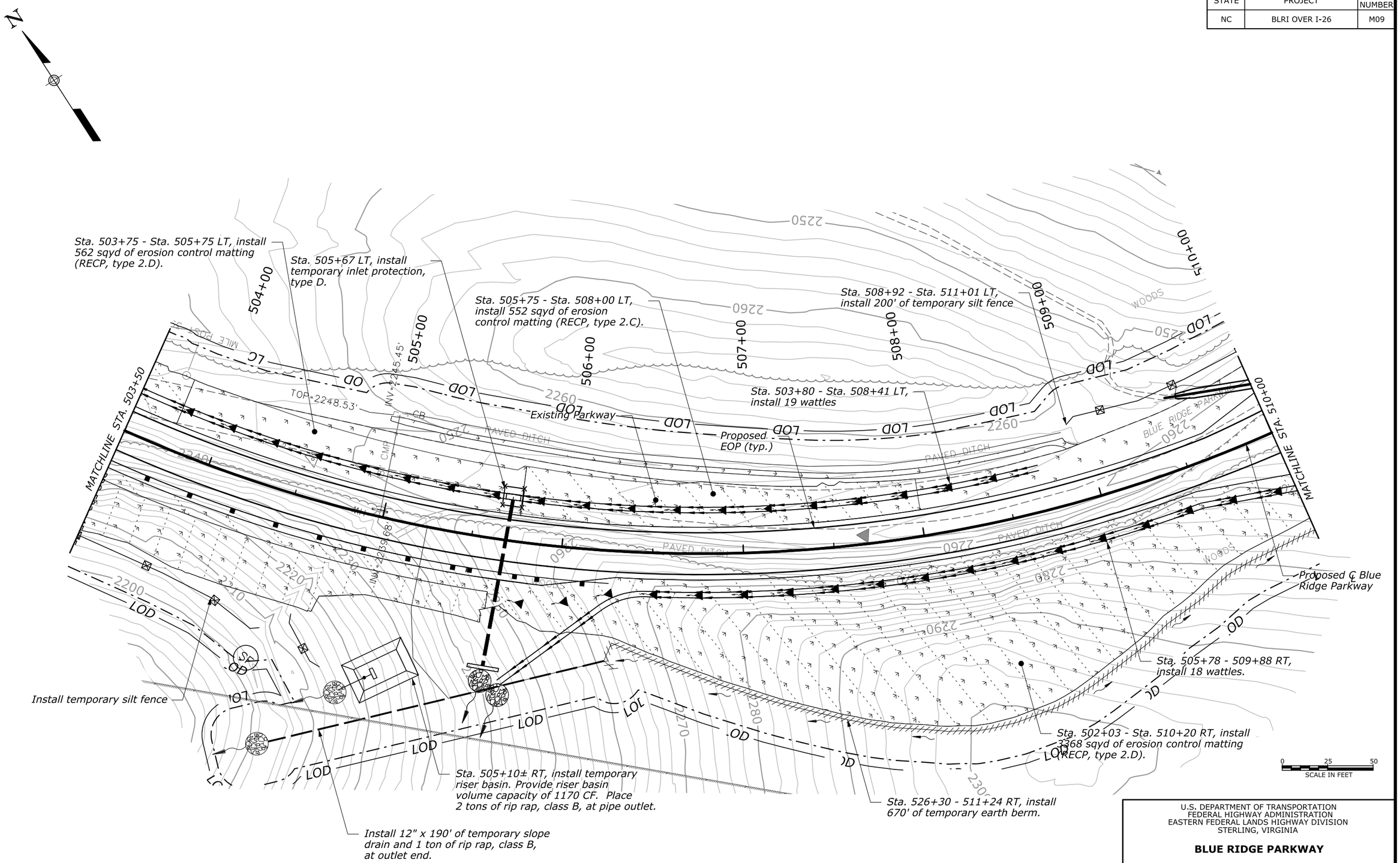

U.S. DEPARTMENT OF TRANSPORTATION
FEDERAL HIGHWAY ADMINISTRATION
EASTERN FEDERAL LANDS HIGHWAY DIVISION
STERLING, VIRGINIA

BLUE RIDGE PARKWAY

EROSION AND SEDIMENT CONTROL PLAN

PHASE 2
SOUTH REINFORCED SOIL SLOPE CONSTRUCTION

14-Mar-2019 03:43 PM\\fhfl\l5f\leserve.f\hd.f\hwa.dot.gov\data\PROJECTS_STATE_DOT\NC\blri_i26_nepa\Proj_Dev\CADD\From_Eng_Support\As_Requested_3_2017\M08-M13-BLRI_I_26_NEPA_plan.dgn

STATE	PROJECT	SHEET NUMBER
NC	BLRI OVER I-26	M10

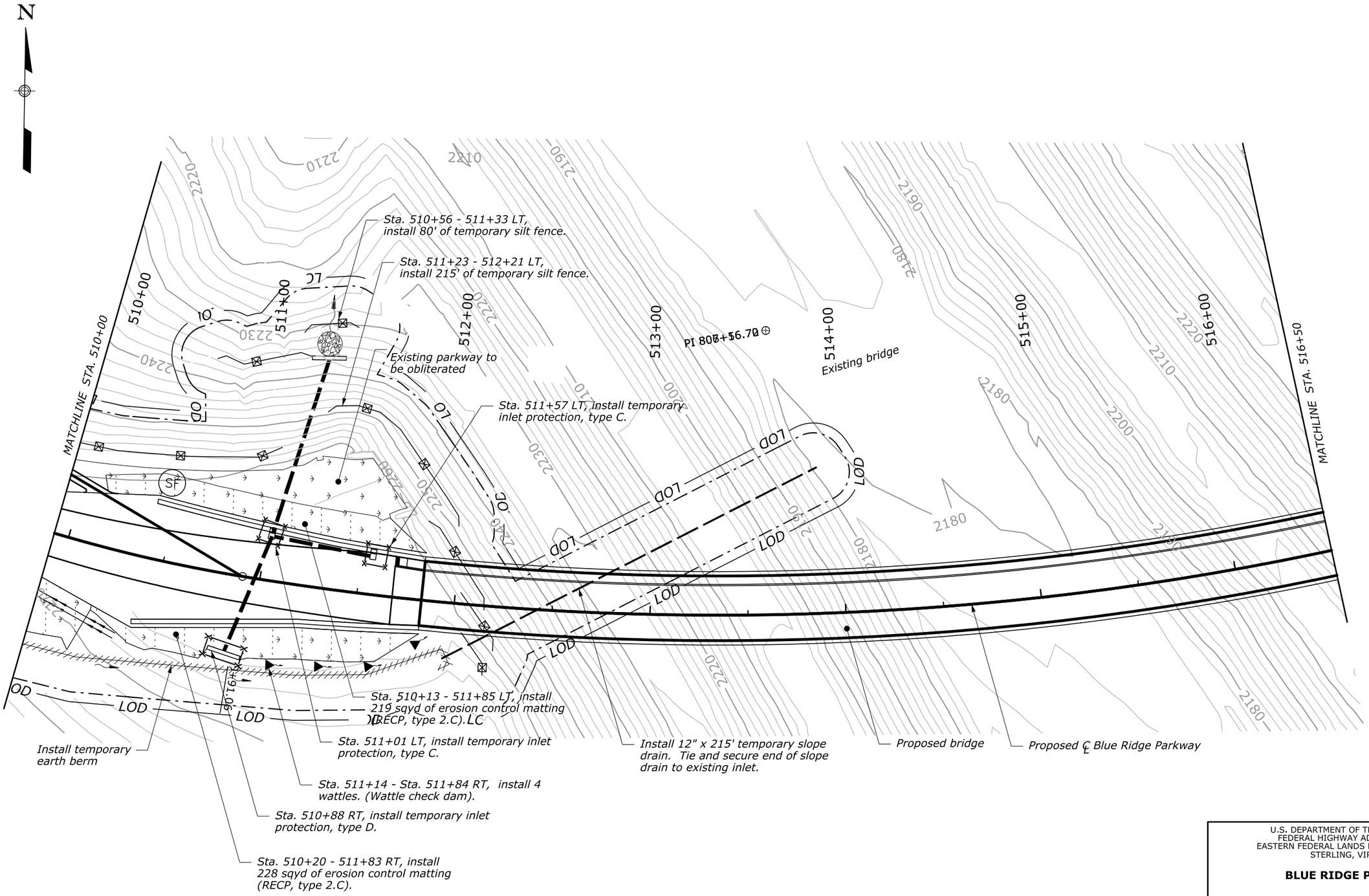

U.S. DEPARTMENT OF TRANSPORTATION
FEDERAL HIGHWAY ADMINISTRATION
EASTERN FEDERAL LANDS HIGHWAY DIVISION
STERLING, VIRGINIA

BLUE RIDGE PARKWAY

EROSION AND SEDIMENT CONTROL PLAN

PHASE 2
SOUTH REINFORCED SOIL SLOPE CONSTRUCTION

14-Mar-2019 03:43 PM\\fhfl15fileserve.flhd.fhwa.dot.gov\data\PROJECTS_STATE_DOT\NC\blri_126_nepa\Proj_Dev\CADD\From_Eng_Support\As_Requested_3_2017\M08-M13-BLRI_I_26_NEPA_plan.dgn

STATE	PROJECT	SHEET NUMBER
NC	BLRI OVER I-26	M11

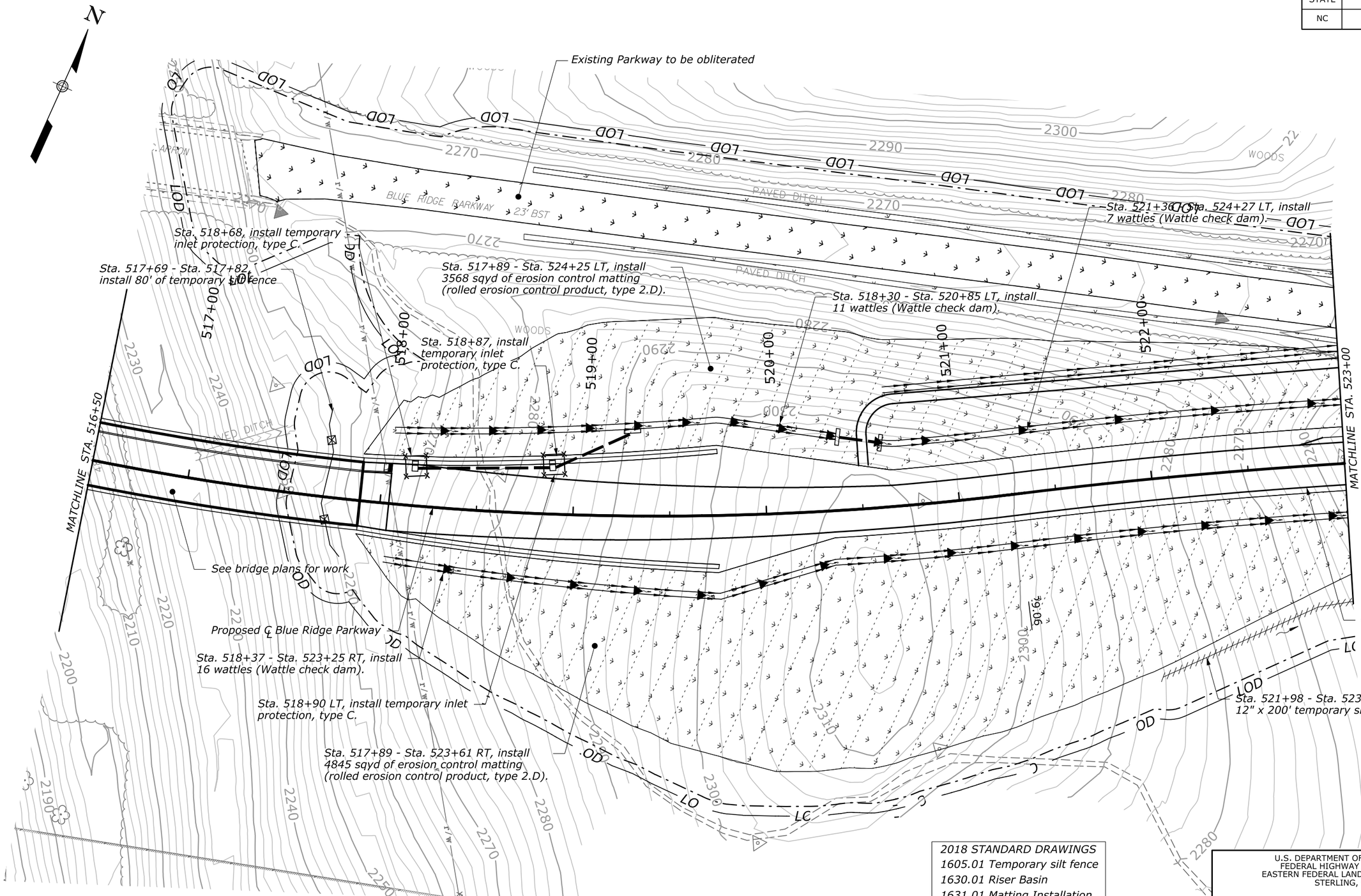

2018 STANDARD DRAWINGS
1605.01 Temporary silt fence
1630.01 Riser Basin
1631.01 Matting Installation

U.S. DEPARTMENT OF TRANSPORTATION
FEDERAL HIGHWAY ADMINISTRATION
EASTERN FEDERAL LANDS HIGHWAY DIVISION
STERLING, VIRGINIA

BLUE RIDGE PARKWAY

EROSION AND SEDIMENT CONTROL PLAN

PHASE 3
NORTH REINFORCED SOIL SLOPE CONSTRUCTION

14-Mar-2019 03:43 PM\\fhfl15fileserve.flhd.fhwa.dot.gov\data\PROJECTS_STATE_DOT\NC\blri_I26_nepa\Proj_Dev\CADD\From_Eng_Support\As_Requested_3_2017\M08-M13-BLRI_I_26_NEPA_plan.dgn

STATE	PROJECT	SHEET NUMBER
NC	BLRI OVER I-26	M12

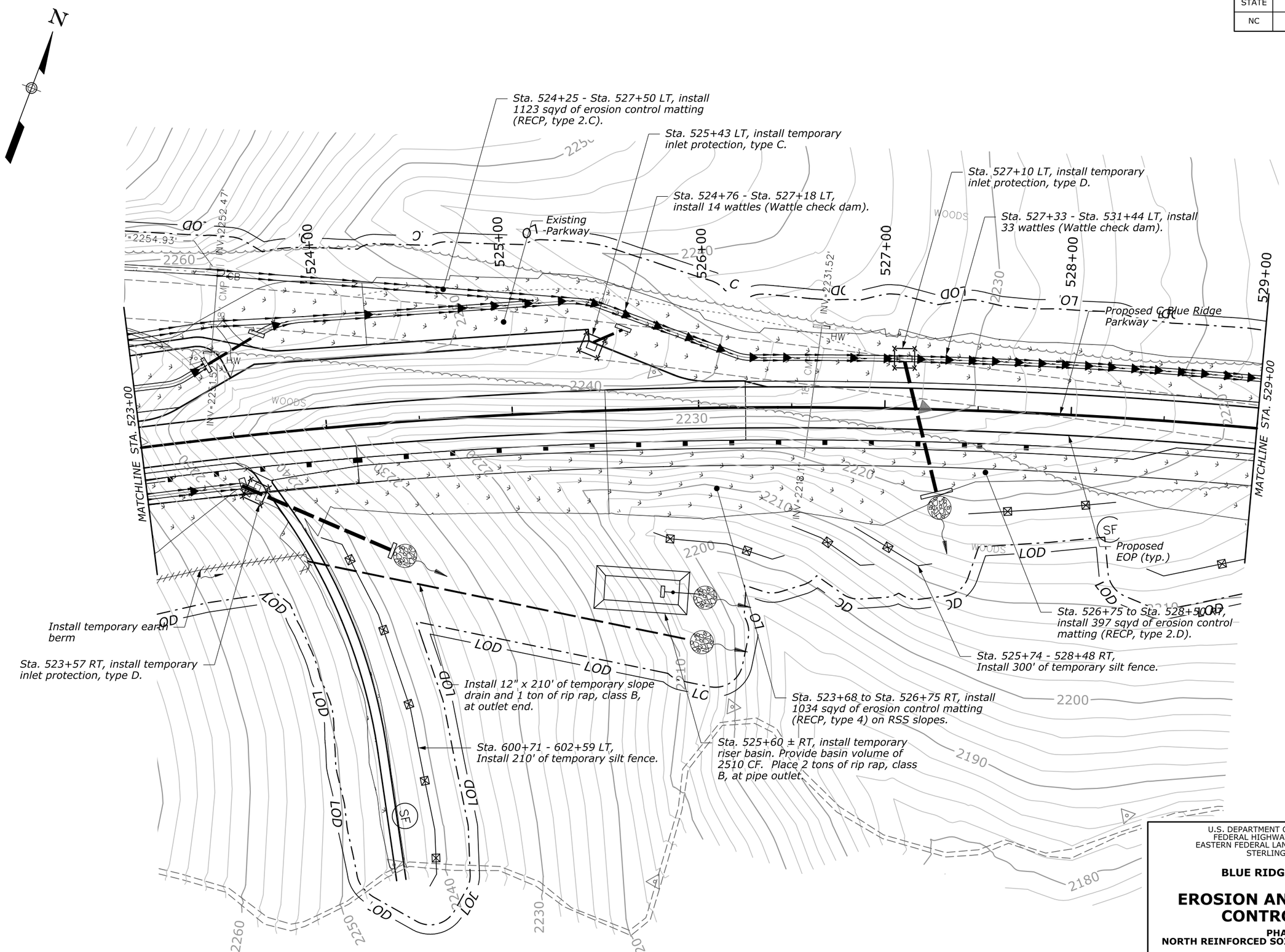

U.S. DEPARTMENT OF TRANSPORTATION
FEDERAL HIGHWAY ADMINISTRATION
EASTERN FEDERAL LANDS HIGHWAY DIVISION
STERLING, VIRGINIA

BLUE RIDGE PARKWAY

EROSION AND SEDIMENT CONTROL PLAN

PHASE 3
NORTH REINFORCED SOIL SLOPE CONSTRUCTION

14-Mar-2019 03:43 PM\\fhfl15fileserve.fhd.fhwa.dot.gov\data\PROJECTS_STATE_DOT\NC\blri_126_nepa\Proj_Dev\CADD\From_Eng_Support\As_Requested_3_2017\M08-M13-BLRI_I_26_NEPA_plan.dgn

STATE	PROJECT	SHEET NUMBER
NC	BLRI OVER I-26	M13

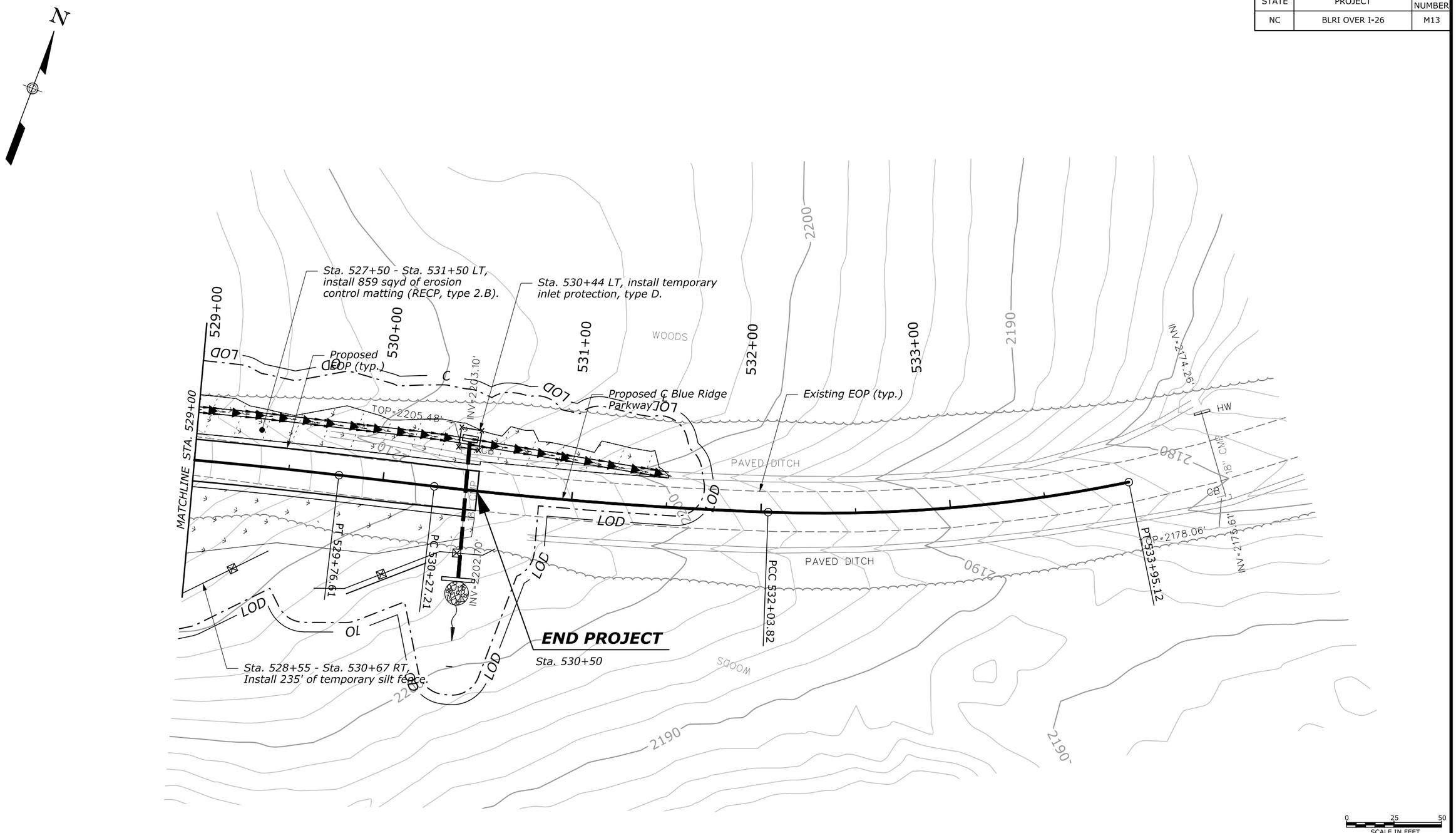

U.S. DEPARTMENT OF TRANSPORTATION
FEDERAL HIGHWAY ADMINISTRATION
EASTERN FEDERAL LANDS HIGHWAY DIVISION
STERLING, VIRGINIA

BLUE RIDGE PARKWAY

EROSION AND SEDIMENT CONTROL PLAN

PHASE 3
NORTH REINFORCED SOIL SLOPE CONSTRUCTION

14-Mar-2019 03:43 PM\\fhfil15fileserve.fhd.fhwa.dot.gov\data\PROJECTS_STATE_DOT\NC\blri_i26_nepa\Proj_Dev\CADD\From_Eng_Support\As_Requested_3_2017\M08-M13-BLRI_I_26_NEPA_plan.dgn

STATE	PROJECT	SHEET NUMBER
NC	BLRI OVER I-26	M14

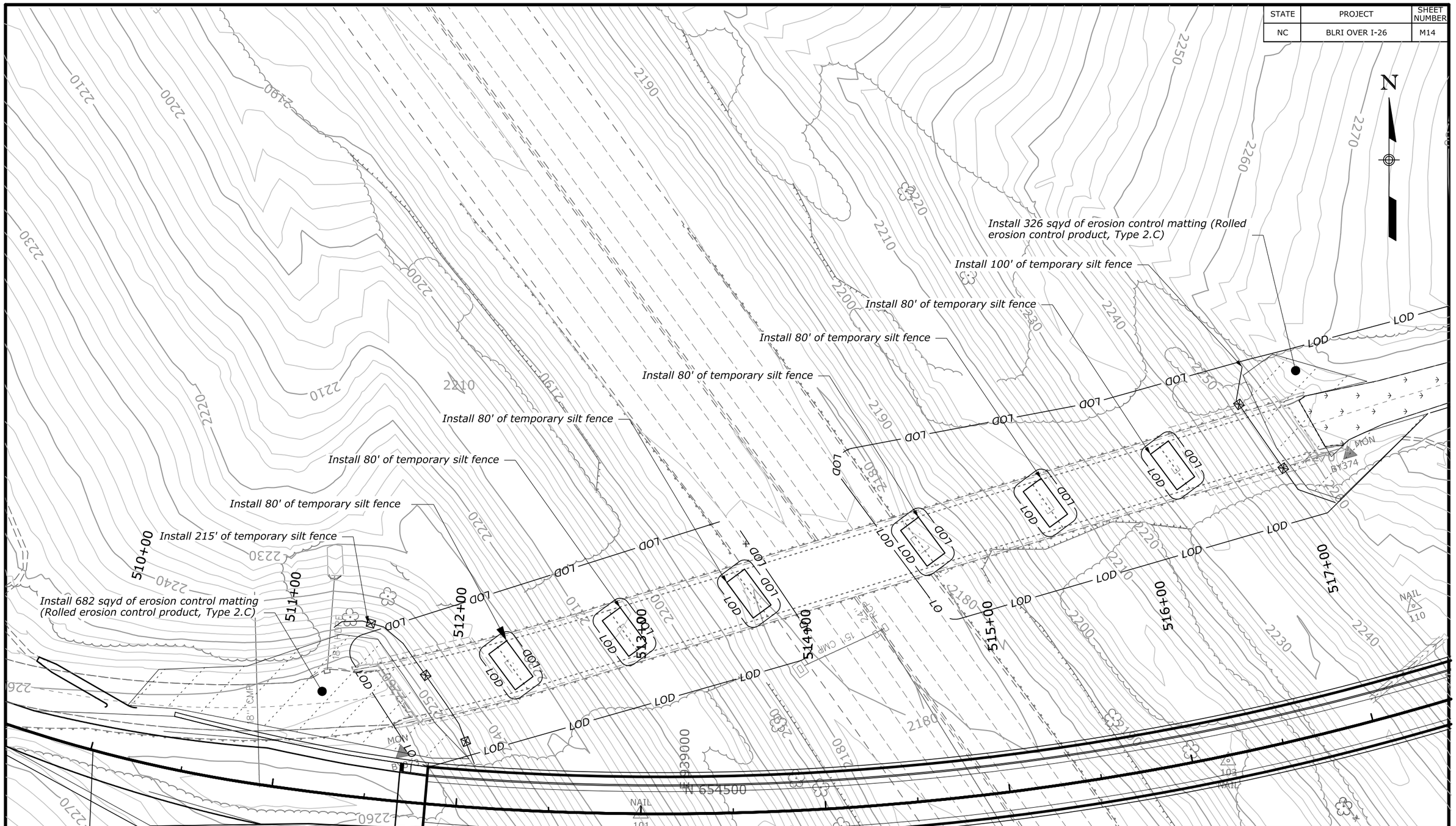

0 25 50
SCALE IN FEET

U.S. DEPARTMENT OF TRANSPORTATION
FEDERAL HIGHWAY ADMINISTRATION
EASTERN FEDERAL LANDS HIGHWAY DIVISION
STERLING, VIRGINIA

BLUE RIDGE PARKWAY

EROSION AND SEDIMENT CONTROL PLAN

PHASE 4
OBLITERATION OF EXISTING ROAD
BRIDGE REMOVAL

12-Dec-2018 10:53 AM M:\PROJECTS_STATE_DOT\NC\blri_i26_repo\Proj_Dev\CADD\From_Eng_Support\As_Requested_3_2017\M14-BLRI_I_26_NEPA_plan.dgn

STATE	PROJECT	SHEET NUMBER
NC	BLRI OVER I-26	M15

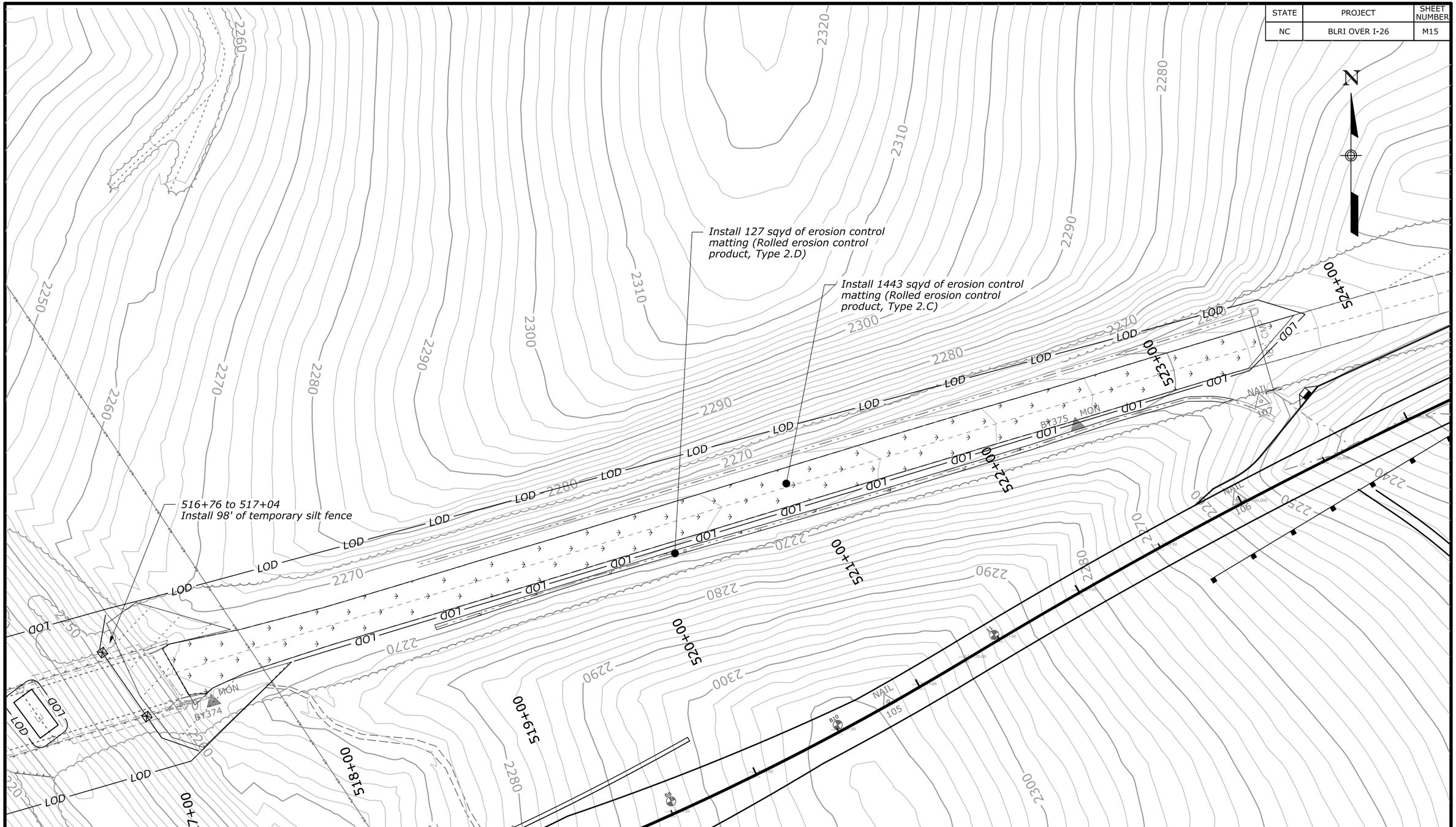

U.S. DEPARTMENT OF TRANSPORTATION
FEDERAL HIGHWAY ADMINISTRATION
EASTERN FEDERAL LANDS HIGHWAY DIVISION
STERLING, VIRGINIA

BLUE RIDGE PARKWAY

EROSION AND SEDIMENT CONTROL PLAN

PHASE 4
OBLITERATION OF EXISTING ROAD AND BRIDGE REMOVAL

0 25 50
SCALE IN FEET

14-Dec-2018 06:21 AM M:\PROJECTS_STATE_DOT\NC\blri-126_nepa\Proj_Dev\CADD\From_Eng_Support\As_Requested_3_2017\M15-BLRI_I_26_NEPA_plan.dgn

STATE	PROJECT	SHEET NUMBER
NC	BLRI OVER I-26	M16

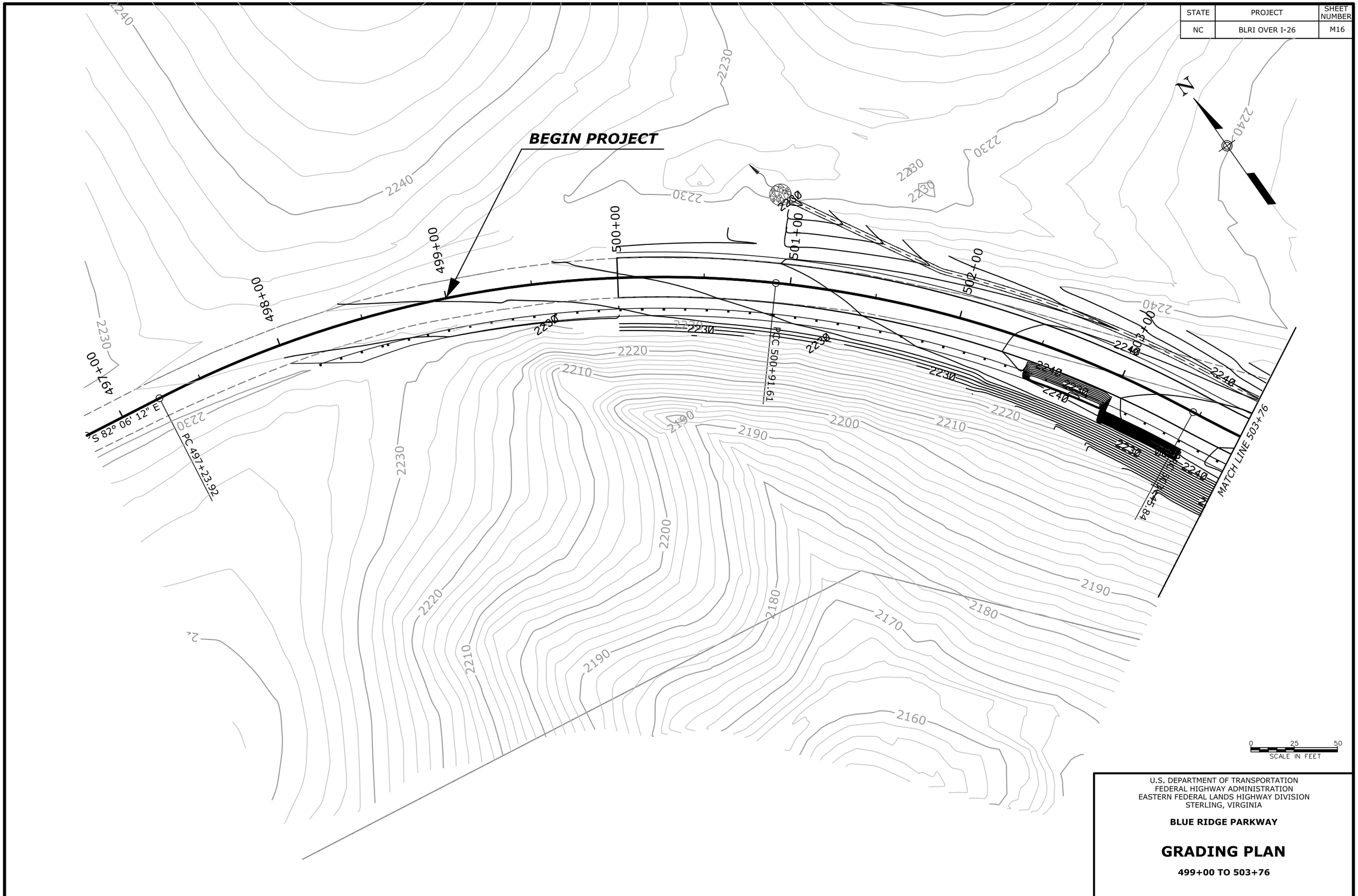

U.S. DEPARTMENT OF TRANSPORTATION
FEDERAL HIGHWAY ADMINISTRATION
EASTERN FEDERAL LANDS HIGHWAY DIVISION
STERLING, VIRGINIA

BLUE RIDGE PARKWAY

GRADING PLAN

499+00 TO 503+76

14-Mar-2019 10:38 AM \\fhf115fileserve.fthd.fhwa.dot.gov\data\PROJECTS_STATE_DOT\NC\blri_I26_nepa\Proj_Dev\CADD\From_Eng_Support\As_Requested_3_2017\M16-M21_BLRI_I_26_NEPA_plan.dgn

STATE	PROJECT	SHEET NUMBER
NC	BLRI OVER I-26	M17

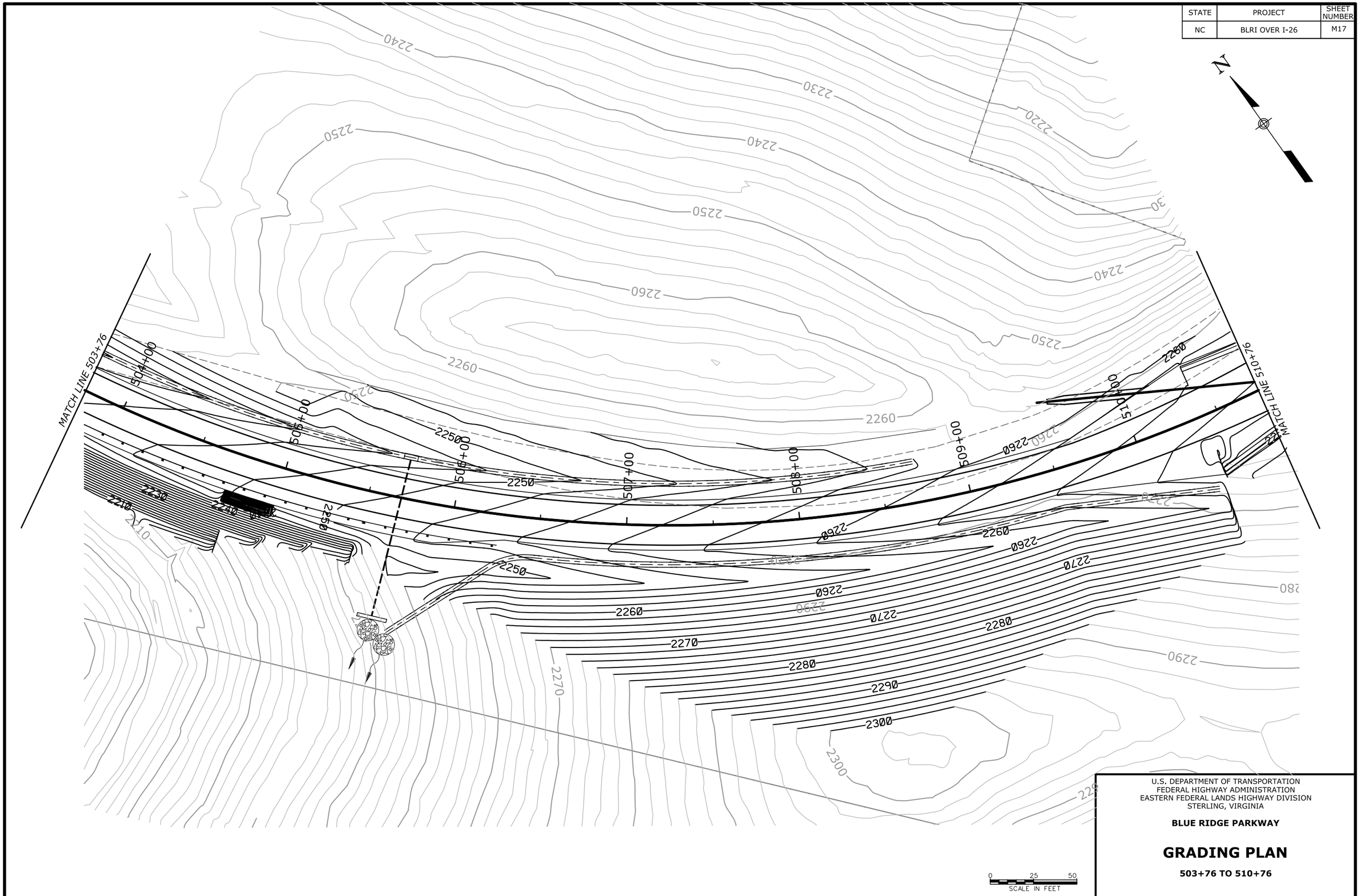

U.S. DEPARTMENT OF TRANSPORTATION
FEDERAL HIGHWAY ADMINISTRATION
EASTERN FEDERAL LANDS HIGHWAY DIVISION
STERLING, VIRGINIA

BLUE RIDGE PARKWAY

GRADING PLAN

503+76 TO 510+76

14-Mar-2019 10:38 AM \\fhf115fileserve.fhdf.fhwa.dot.gov\data\PROJECTS_STATE_DOT\NC\blri_I26_nepa\Proj_Dev\CADD\From_Eng_Support\As_Requested_3_2017\M16-M21_BLRI_I_26_NEPA_plan.dgn

STATE	PROJECT	SHEET NUMBER
NC	BLRI OVER I-26	M18

U.S. DEPARTMENT OF TRANSPORTATION
FEDERAL HIGHWAY ADMINISTRATION
EASTERN FEDERAL LANDS HIGHWAY DIVISION
STERLING, VIRGINIA

BLUE RIDGE PARKWAY

GRADING PLAN

510+76 TO 517+76

14-Mar-2019 10:38 AM

STATE	PROJECT	SHEET NUMBER
NC	BLRI OVER I-26	M19

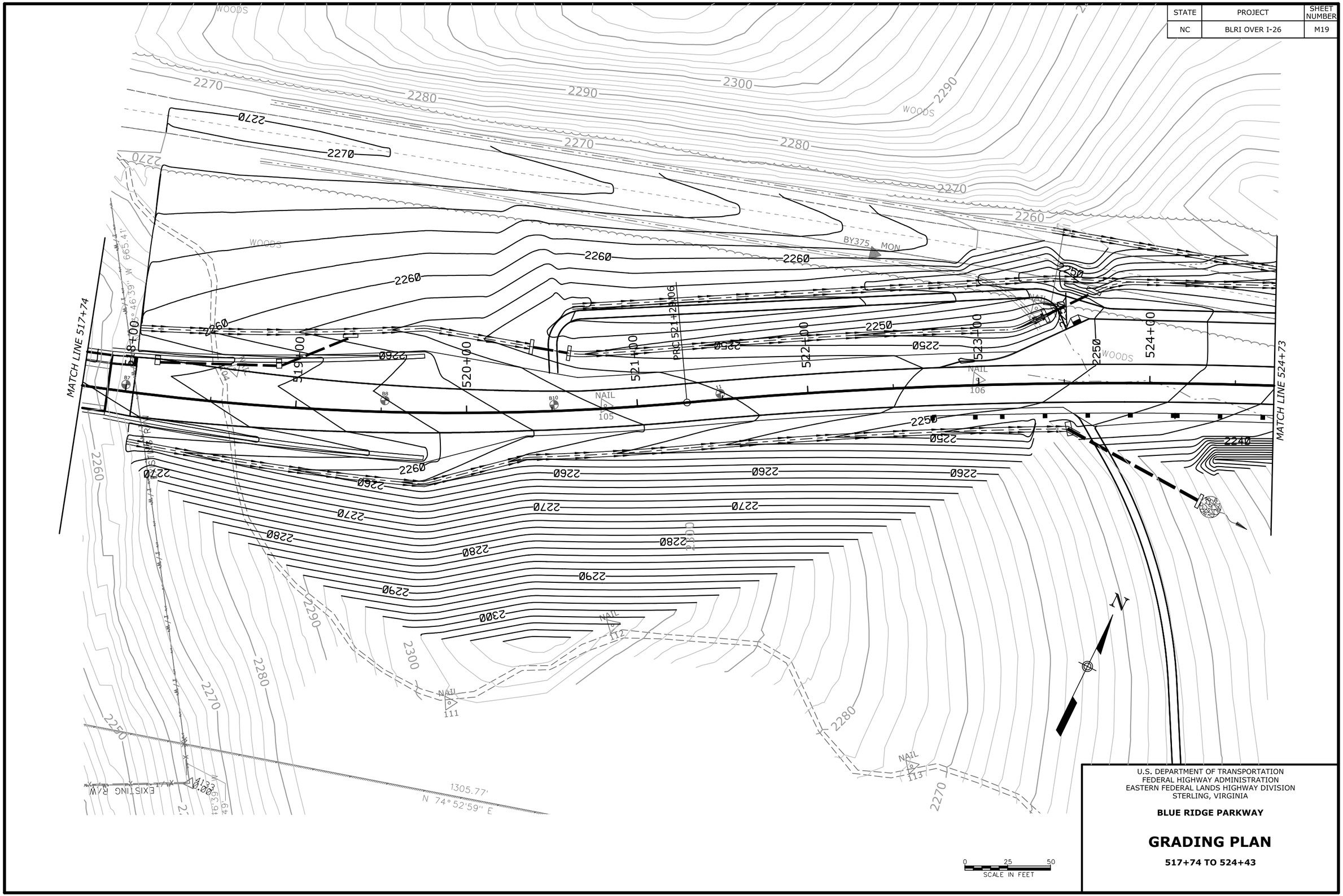

U.S. DEPARTMENT OF TRANSPORTATION
FEDERAL HIGHWAY ADMINISTRATION
EASTERN FEDERAL LANDS HIGHWAY DIVISION
STERLING, VIRGINIA

BLUE RIDGE PARKWAY

GRADING PLAN

517+74 TO 524+43

14-Mar-2019 10:38 AM \\fhfl15fileserve.fhd.fhwa.dot.gov\data\PROJECTS_STATE_DOT\NC\blri_I26_nepa\Proj_Dev\CADD\From_Eng_Support\As_Requested_3_2017\M16-M21_BLRI_I_26_NEPA_plan.dgn

STATE	PROJECT	SHEET NUMBER
NC	BLRI OVER I-26	M20

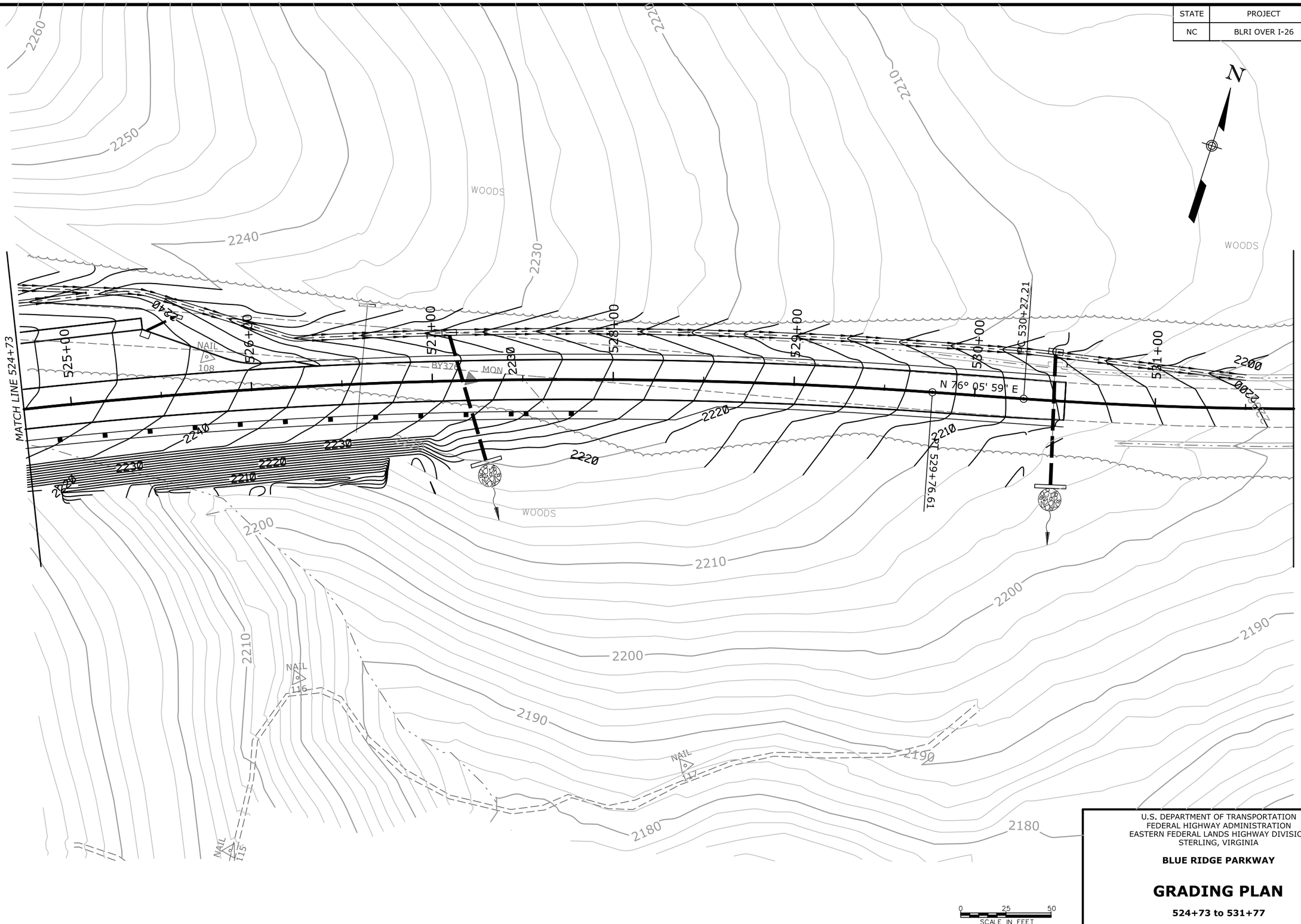

U.S. DEPARTMENT OF TRANSPORTATION
FEDERAL HIGHWAY ADMINISTRATION
EASTERN FEDERAL LANDS HIGHWAY DIVISION
STERLING, VIRGINIA

BLUE RIDGE PARKWAY

GRADING PLAN

524+73 to 531+77

14-Mar-2019 10:38 AM \\fhfl15fileserve.flhd.fhwa.dot.gov\data\PROJECTS_STATE_DOT\NC\blri_I26_nepa\Proj_Dev\CADD\From_Eng_Support\As_Requested_3_2017\M16-M21_BLRI_I_26_NEPA_plan.dgn

STATE	PROJECT	SHEET NUMBER
NC	BLRI OVER I-26	M21

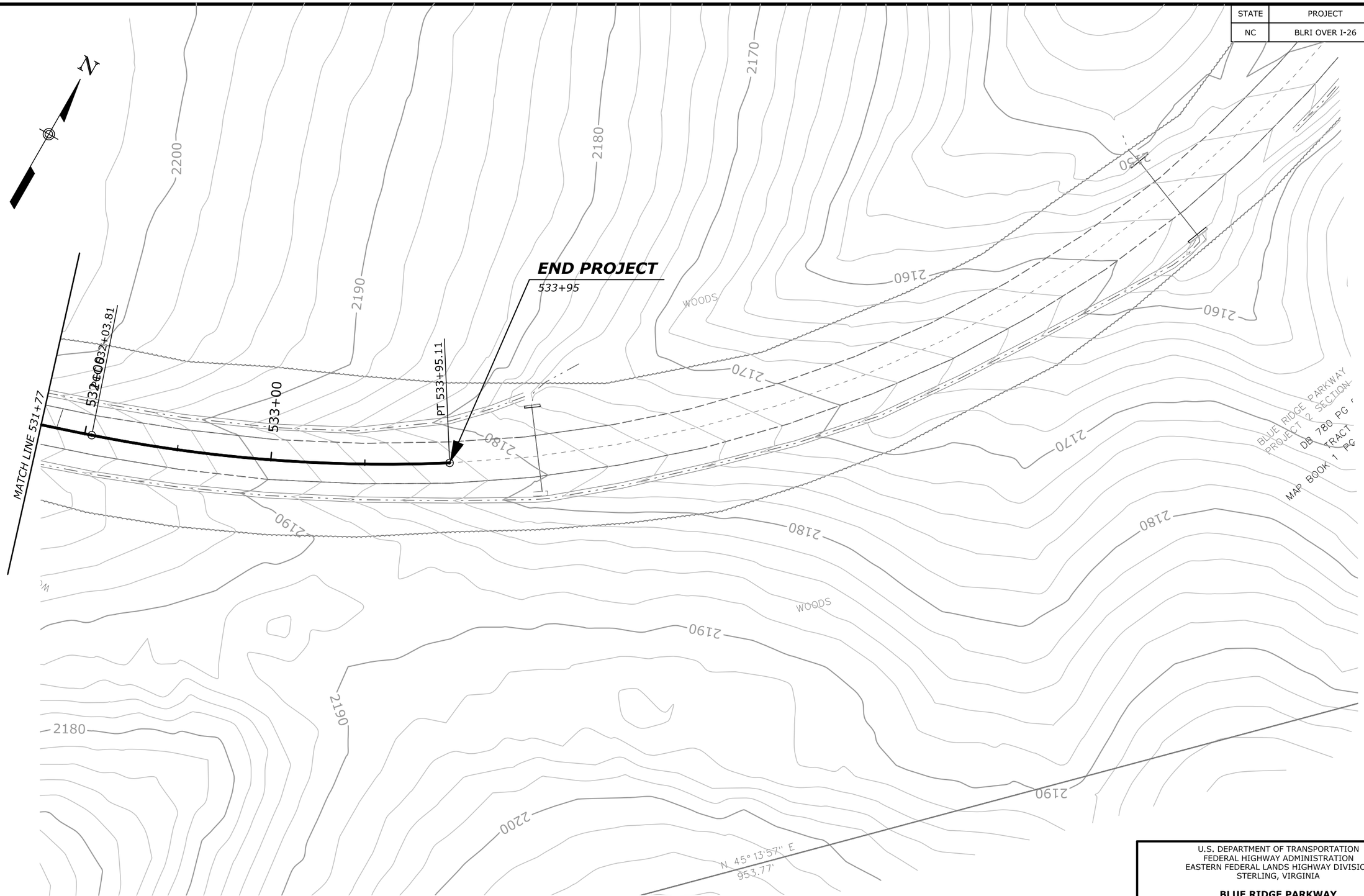

U.S. DEPARTMENT OF TRANSPORTATION
FEDERAL HIGHWAY ADMINISTRATION
EASTERN FEDERAL LANDS HIGHWAY DIVISION
STERLING, VIRGINIA

BLUE RIDGE PARKWAY

GRADING PLAN

531+77 to 533+95

14-Mar-2019 10:38 AM \\fhfl51fileserve.fhwa.dot.gov\data\PROJECTS_STATE_DOT\NC\blri_i26_nepa\Proj_Dev\CADD\From_Eng_Support\As_Requested_3_2017\M16-M21_BLRI_I_26_NEPA_plan.dgn

STATE	PROJECT	SHEET NUMBER
NC	BLRI OVER I-26	M22

GENERAL NOTES:

1. See D sheet for construction work
2. Plant trees and shrubs according to planting methods shown on the plans
3. Any deviation from options given will require prior approval by Engineer.

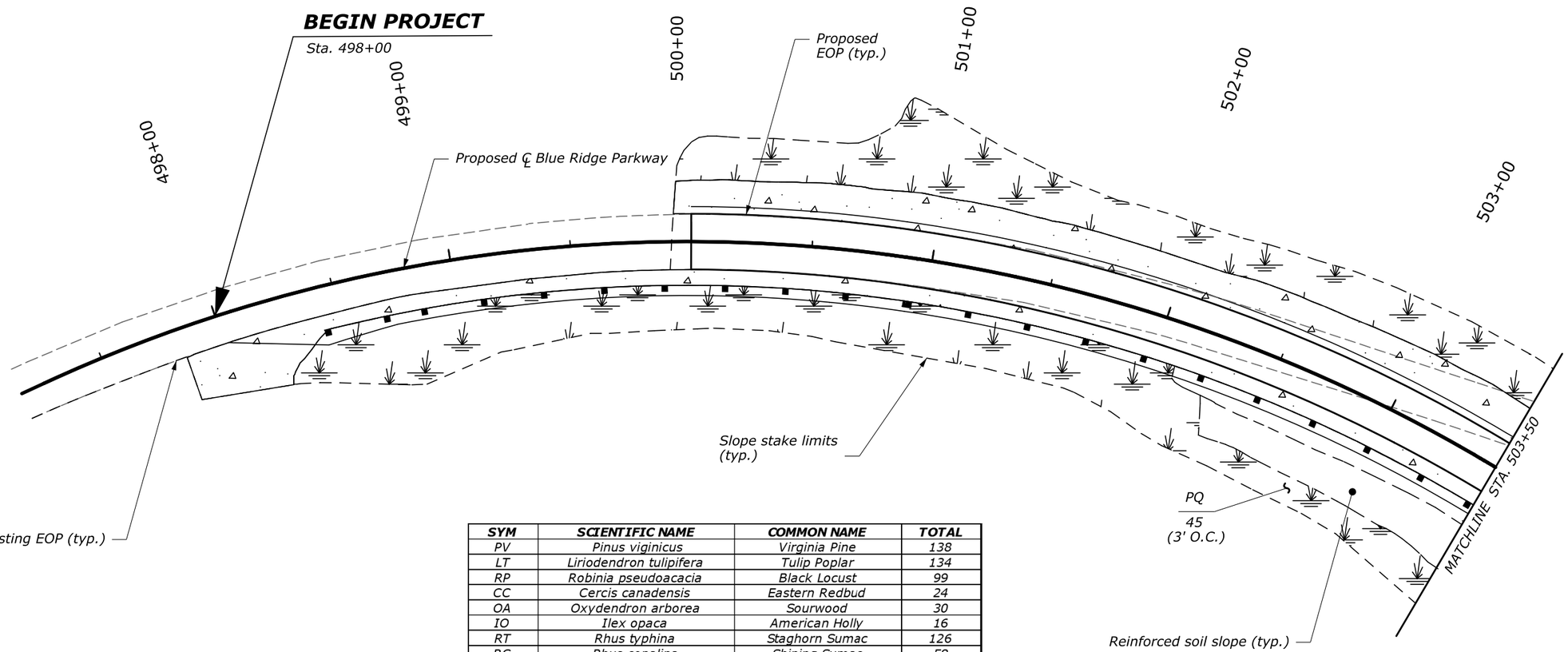

SYM	SCIENTIFIC NAME	COMMON NAME	TOTAL
PV	Pinus viginicus	Virginia Pine	138
LT	Liriodendron tulipifera	Tulip Poplar	134
RP	Robinia pseudoacacia	Black Locust	99
CC	Cercis canadensis	Eastern Redbud	24
OA	Oxydendron arborea	Sourwood	30
IO	Ilex opaca	American Holly	16
RT	Rhus typhina	Staghorn Sumac	126
RC	Rhus copalina	Shining Sumac	58
RG	Rhus glabra	Smooth Sumac	124
RS	Rubus species	Rubus	135
RW	Rhododendron catawbiense	Catawba Rhododendron	22
LB	Lindera benzoin	Spicebush	32
VP	Viburnum prunifolium	Blackhaw Viburnum	58
HP	Hypericum prolificum	Shrubby St. John's Wort	50
PQ	Parthenocissus quinquefolia	Virginia Creeper	220
			1266

LEGEND

Permanent vegetation (Meadow seed mix)

Road shoulder turf establishment

0 25 50
SCALE IN FEET

U.S. DEPARTMENT OF TRANSPORTATION
FEDERAL HIGHWAY ADMINISTRATION
EASTERN FEDERAL LANDS HIGHWAY DIVISION
STERLING, VIRGINIA

BLUE RIDGE PARKWAY

LANDSCAPING PLAN

12-Dec-2018 03:36 PWM:\PROJECTS_STATE_DOT\NC\blri_i26_repo\Proj_Dev\CADD\From_Eng_Support\As_Requested_3_2017\M22-M27-BLRI_I_26_NEPA_plan.dgn

STATE	PROJECT	SHEET NUMBER
NC	BLRI OVER I-26	M23

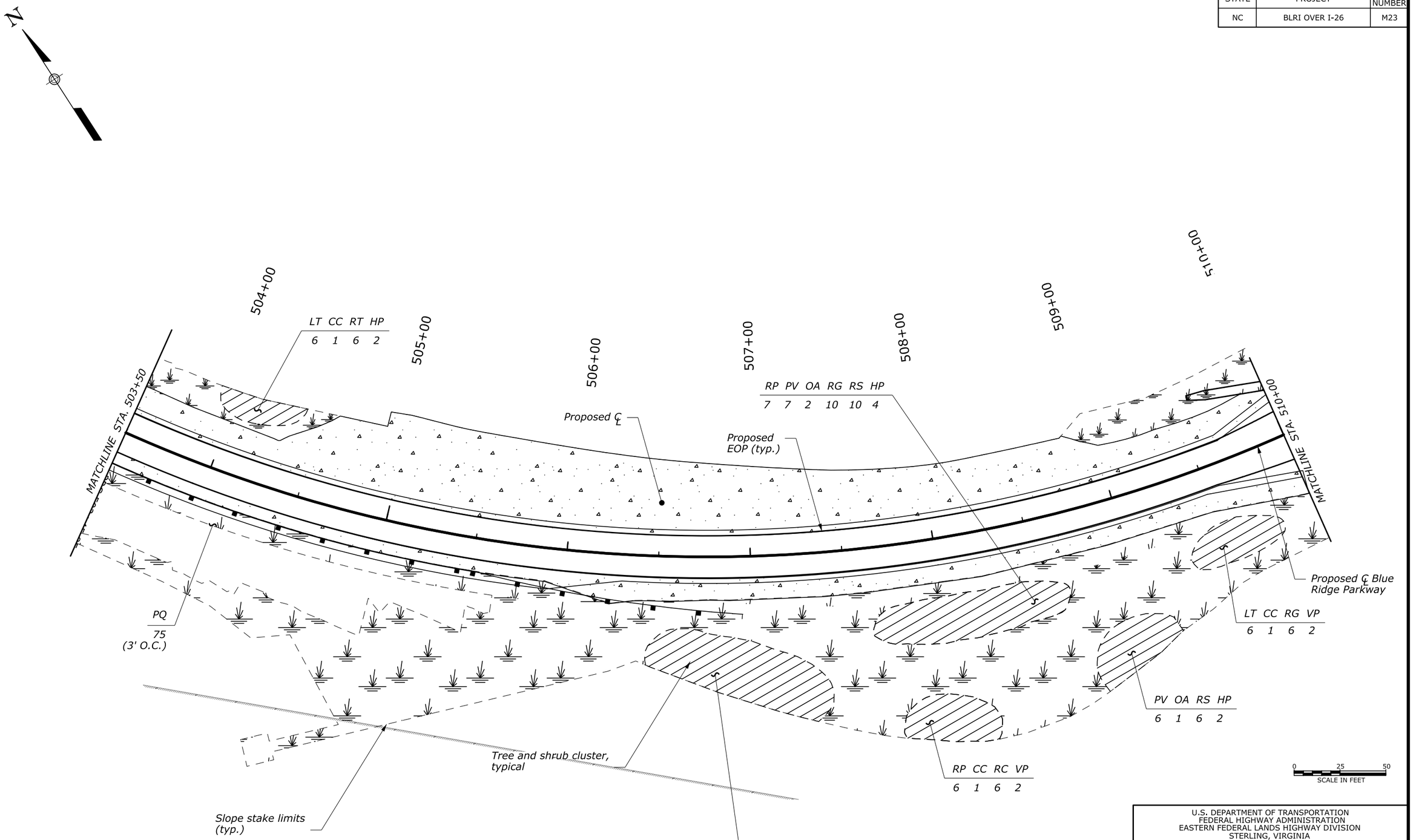

U.S. DEPARTMENT OF TRANSPORTATION
FEDERAL HIGHWAY ADMINISTRATION
EASTERN FEDERAL LANDS HIGHWAY DIVISION
STERLING, VIRGINIA

BLUE RIDGE PARKWAY

LANDSCAPING PLAN

12-Dec-2018 11:23 AM M:\PROJECTS_STATE_DOT\NC\blri_i26_repo\Proj_Dev\CADD\From_Eng_Support\As_Requested_3_2017\M23-M27-BLRI_I_26_NEPA_plan.dgn

STATE	PROJECT	SHEET NUMBER
NC	BLRI OVER I-26	M24

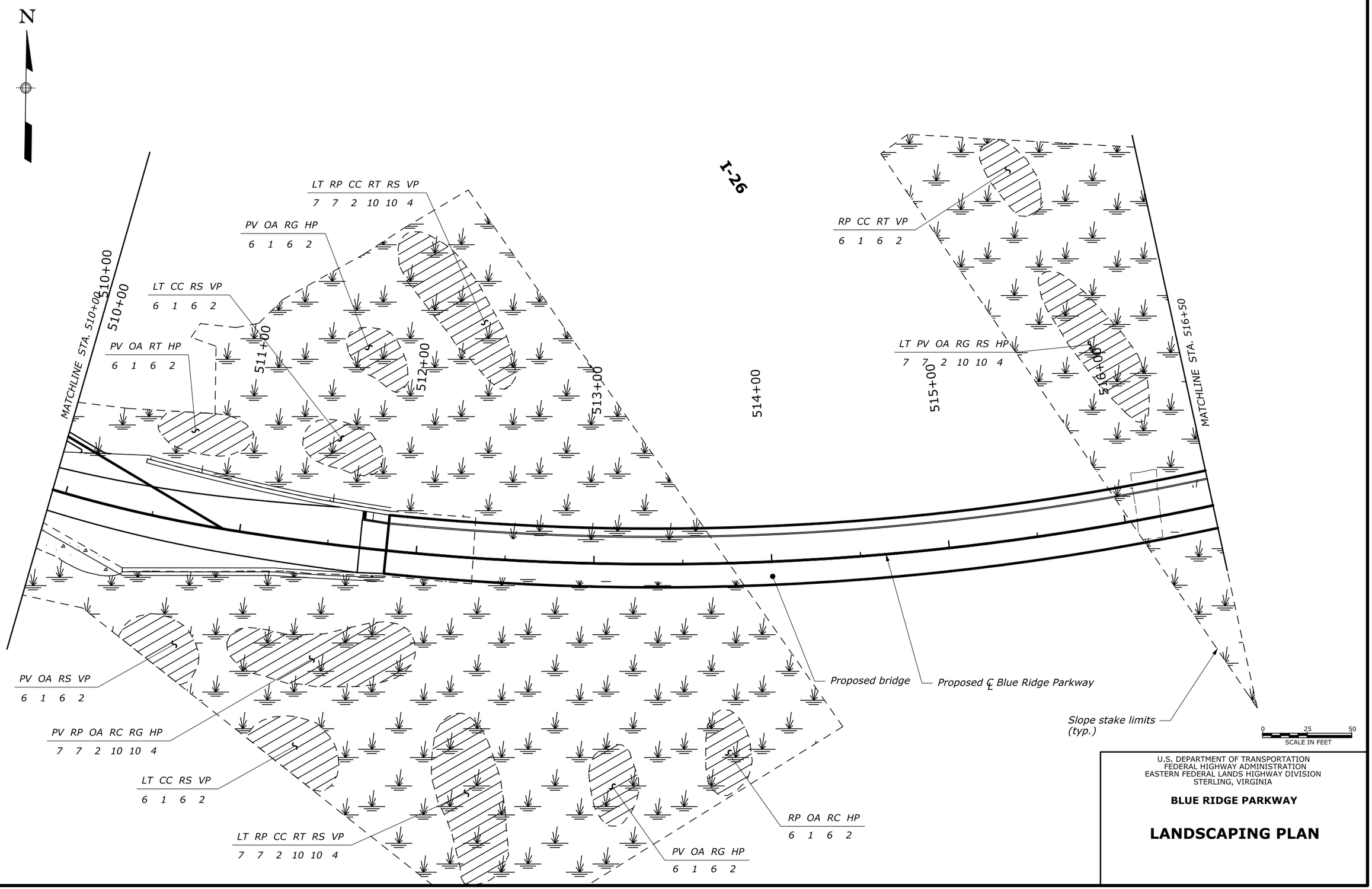

U.S. DEPARTMENT OF TRANSPORTATION
FEDERAL HIGHWAY ADMINISTRATION
EASTERN FEDERAL LANDS HIGHWAY DIVISION
STERLING, VIRGINIA

BLUE RIDGE PARKWAY

LANDSCAPING PLAN

21-Dec-2018 08:44 AM M:\PROJECTS_STATE_DOT\NC\blri_i26_nepa\Proj_Dev\CADD\From_Eng_Support\As_Requested_3_2017\M22-M27-BLRI_I_26_NEPA_plan.dgn

STATE	PROJECT	SHEET NUMBER
NC	BLRI OVER I-26	M25

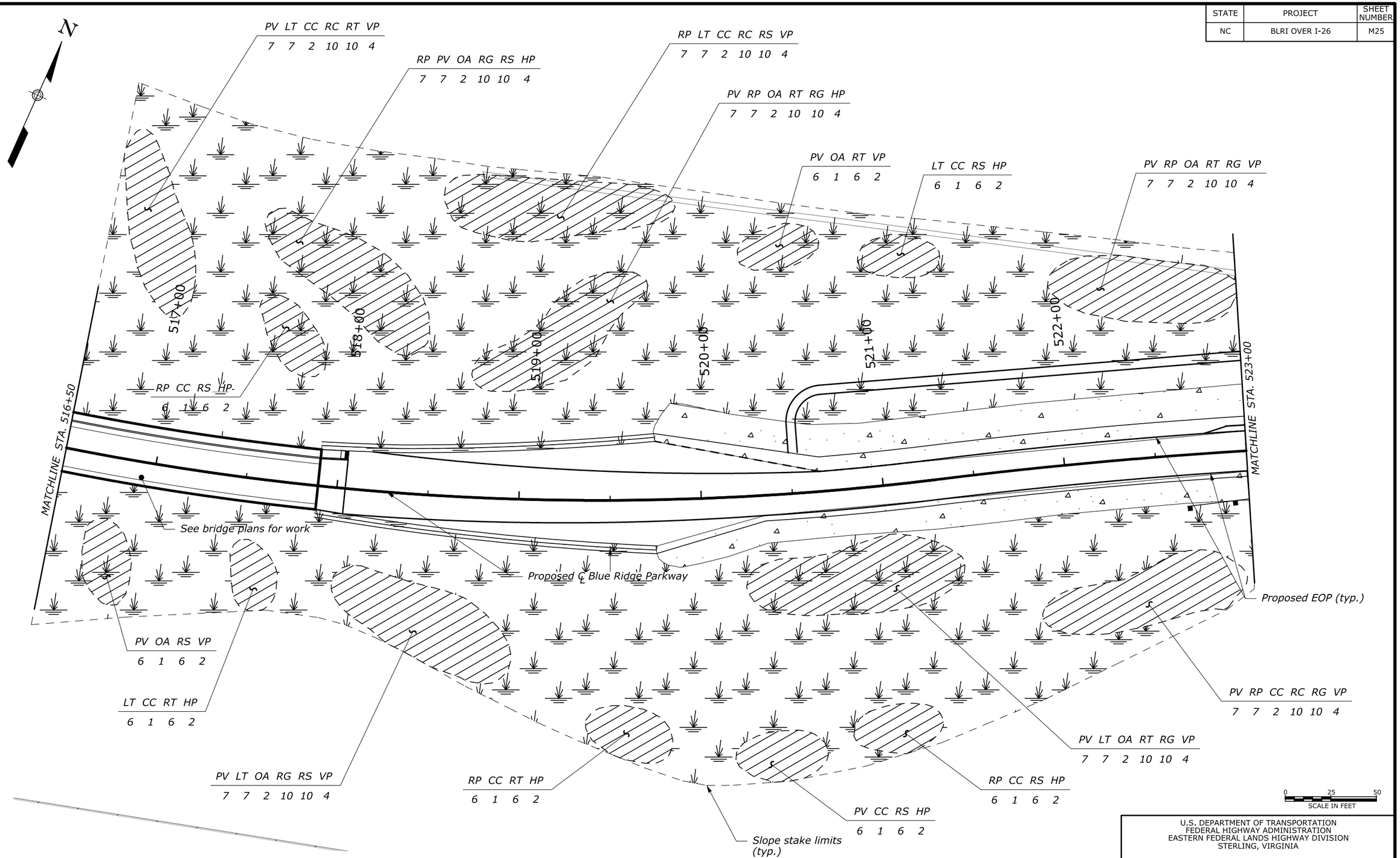

U.S. DEPARTMENT OF TRANSPORTATION
FEDERAL HIGHWAY ADMINISTRATION
EASTERN FEDERAL LANDS HIGHWAY DIVISION
STERLING, VIRGINIA

BLUE RIDGE PARKWAY

LANDSCAPING PLAN

21-Dec-2018 08:59 AM M:\PROJECTS_STATE_DOT\NC\blri_i26_nepa\Proj_Dev\CADD\From_Eng_Support\As_Requested_3_2017\M22-M27-BLRI_I_26_NEPA_plan.dgn

STATE	PROJECT	SHEET NUMBER
NC	BLRI OVER I-26	M26

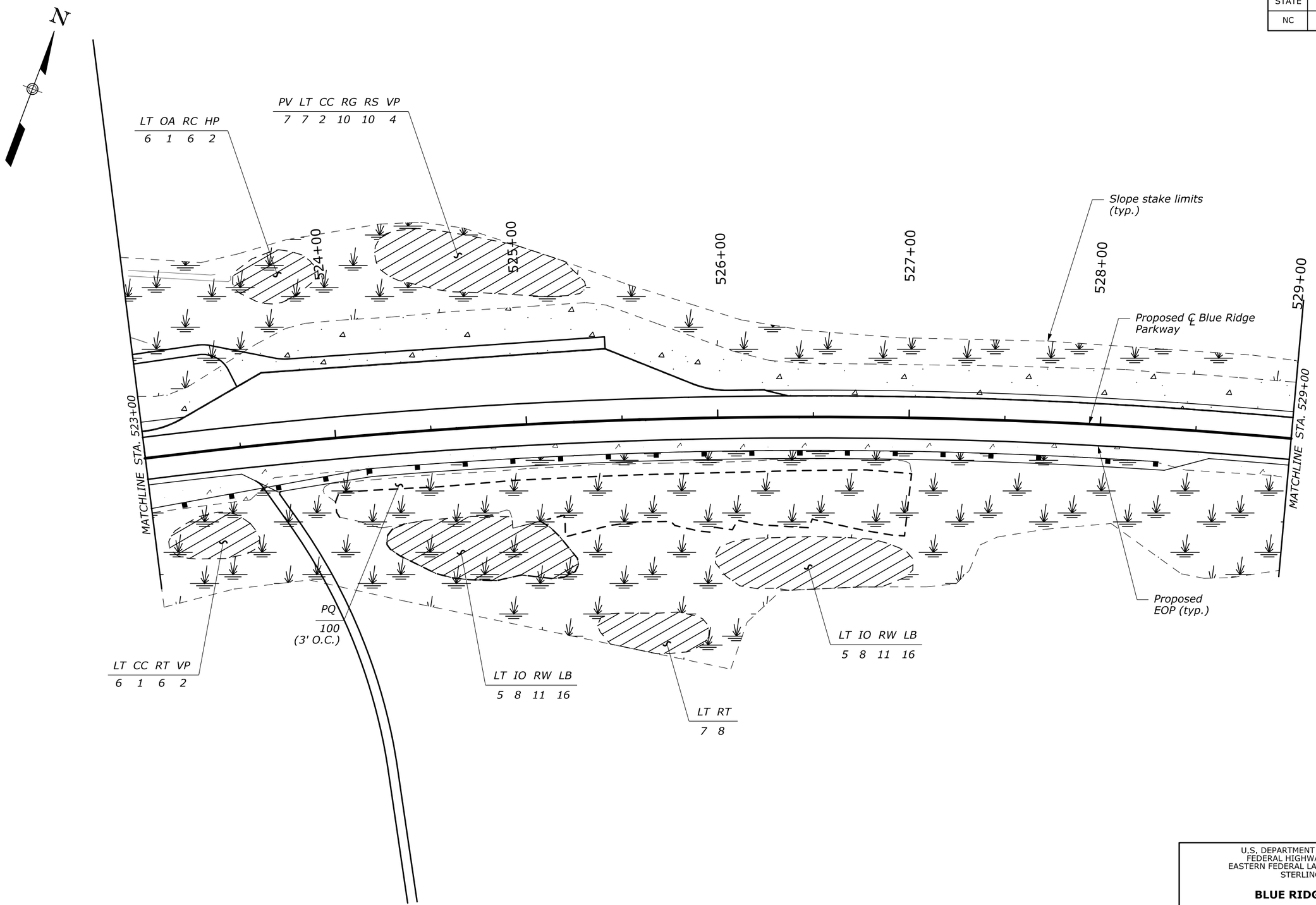

0 25 50
SCALE IN FEET

U.S. DEPARTMENT OF TRANSPORTATION
FEDERAL HIGHWAY ADMINISTRATION
EASTERN FEDERAL LANDS HIGHWAY DIVISION
STERLING, VIRGINIA

BLUE RIDGE PARKWAY

LANDSCAPING PLAN

21-Dec-2018 09:00 AM M:\PROJECTS_STATE_DOT\NC\blri_i26_repo\Proj_Dev\CADD\From_Eng_Support\As_Requested_3_2017\M22-M27-BLRI_I_26_NEPA_plan.dgn

STATE	PROJECT	SHEET NUMBER
NC	BLRI OVER I-26	M27

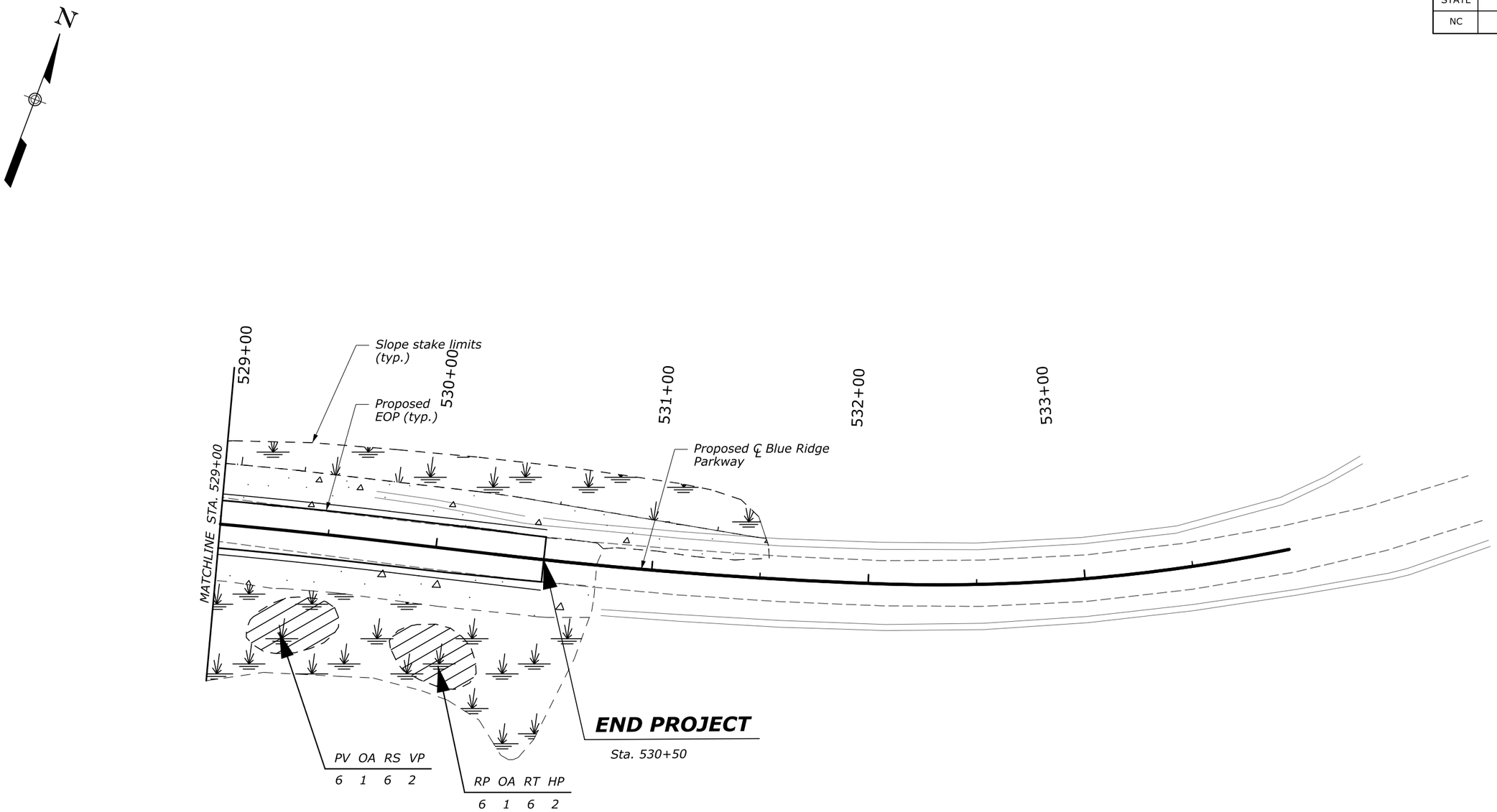

0 25 50
SCALE IN FEET

U.S. DEPARTMENT OF TRANSPORTATION
FEDERAL HIGHWAY ADMINISTRATION
EASTERN FEDERAL LANDS HIGHWAY DIVISION
STERLING, VIRGINIA

BLUE RIDGE PARKWAY

LANDSCAPING PLAN

21-Dec-2018 09:03 AM M:\PROJECTS_STATE_DOT\NC\blri_I26_nepa\Proj_Dev\CADD\From_Eng_Support\As_Requested_3_2017\M22-M27-BLRI_I_26_NEPA_plan.dgn

STATE	PROJECT	SHEET NUMBER
NC	BLRI OVER I-26	M28

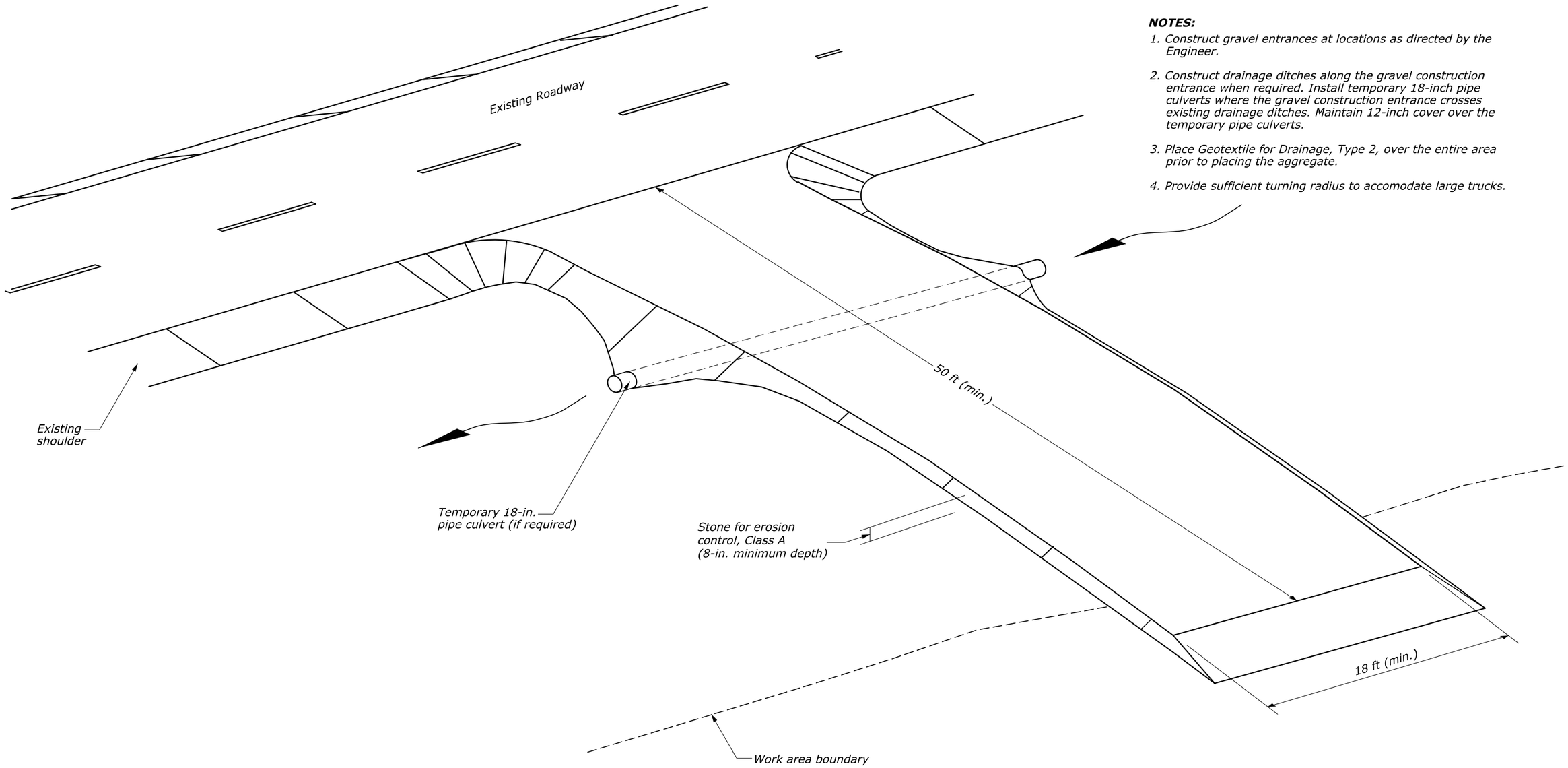

NOTES:

1. *Construct gravel entrances at locations as directed by the Engineer.*
2. *Construct drainage ditches along the gravel construction entrance when required. Install temporary 18-inch pipe culverts where the gravel construction entrance crosses existing drainage ditches. Maintain 12-inch cover over the temporary pipe culverts.*
3. *Place Geotextile for Drainage, Type 2, over the entire area prior to placing the aggregate.*
4. *Provide sufficient turning radius to accomodate large trucks.*

NO SCALE

U.S. DEPARTMENT OF TRANSPORTATION
FEDERAL HIGHWAY ADMINISTRATION
EASTERN FEDERAL LANDS HIGHWAY DIVISION
STERLING, VIRGINIA

BLUE RIDGE PARKWAY

GRAVEL CONSTRUCTION ENTRANCE

M:\PROJECTS_STATE_DOT\NC\blri_i26_nepo\Proj_Dev\CADD\From_Eng_Support\As_Requested_3_2017\M28-st15701A_detail.dgn
12-Dec-2018 11:50 AM

STATE	PROJECT	SHEET NUMBER
NC	BLRI OVER I-26	M29

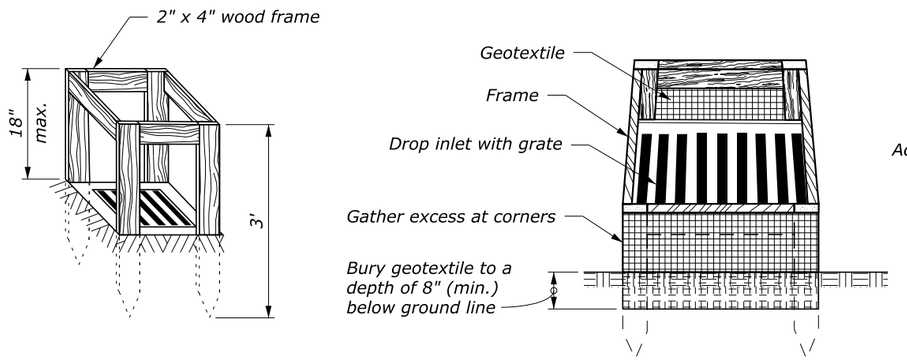

SILT FENCE DROP INLET PROTECTION (TYPE A)

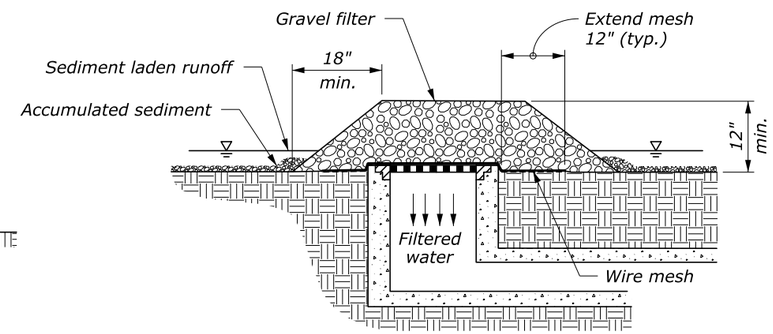

GRAVEL AND WIRE MESH DROP INLET PROTECTION (TYPE B)

NOTES:

1. For gravel filters use 2"- 3" diameter coarse aggregate.
2. Use wire mesh with ½" x ½" openings.
3. Use type A inlet protection in sump locations only.
4. Use type B inlet protection only in sump locations where heavy concentrated flows are not expected. Do not use where ponding around the structure might cause inconvenience or damage.

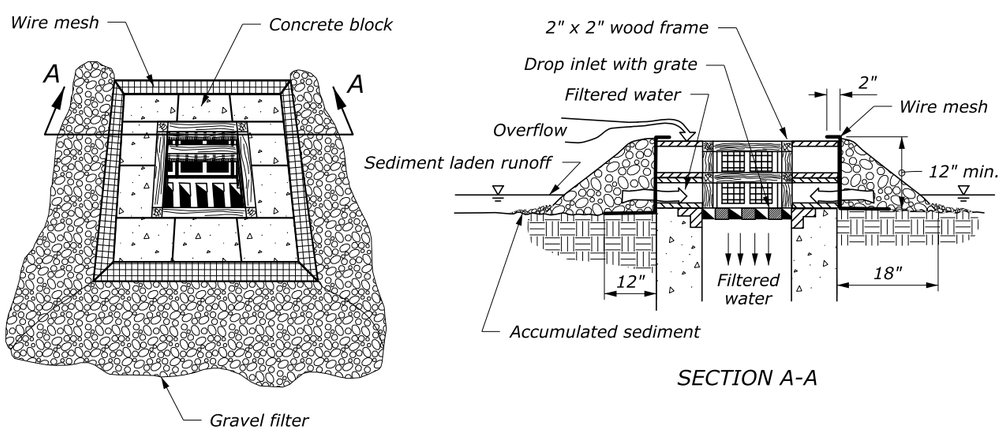

SECTION A-A

BLOCK AND GRAVEL DROP INLET PROTECTION (TYPE C)

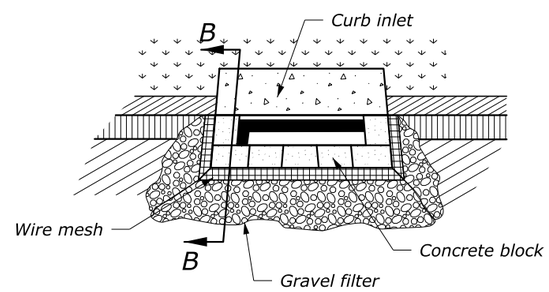

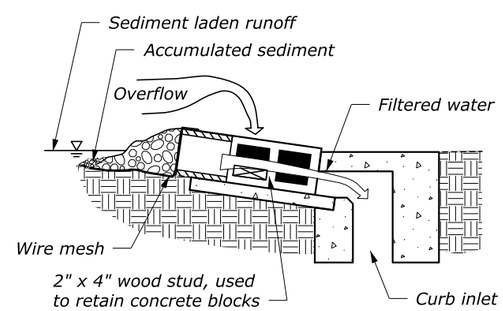

SECTION B-B

CURB INLET PROTECTION, BLOCK AND GRAVEL (TYPE D)

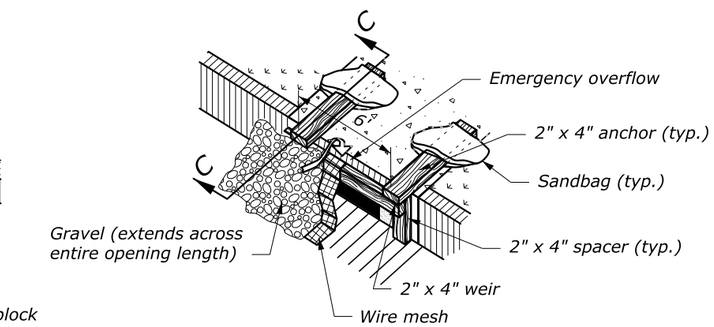

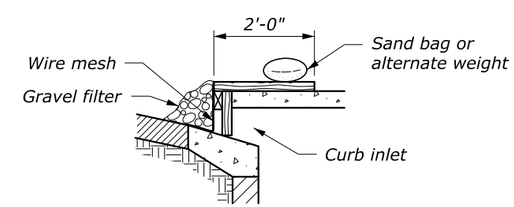

SECTION C-C

CURB INLET PROTECTION, WOODEN WEIR (TYPE E)

NO SCALE

U.S. DEPARTMENT OF TRANSPORTATION
FEDERAL HIGHWAY ADMINISTRATION
EASTERN FEDERAL LANDS HIGHWAY DIVISION
STERLING, VIRGINIA

BLUE RIDGE PARKWAY

TEMPORARY INLET PROTECTION

SUPPLEMENTAL TITLE

12-Dec-2018 11:52 AM M:\PROJECTS_STATE_DOT\NC\blri_i26_nepo\Proj_Dev\CADD\From_Eng_Support\As_Requested_3_2017\M29-sti5702_EFL_TEMP.dgn

STATE	PROJECT	SHEET NUMBER
NC	BLRI OVER I-26	M30

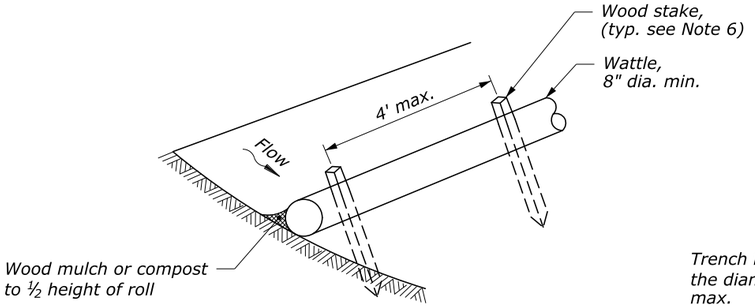

UNTRENCHED INSTALLATION ISOMETRIC VIEW

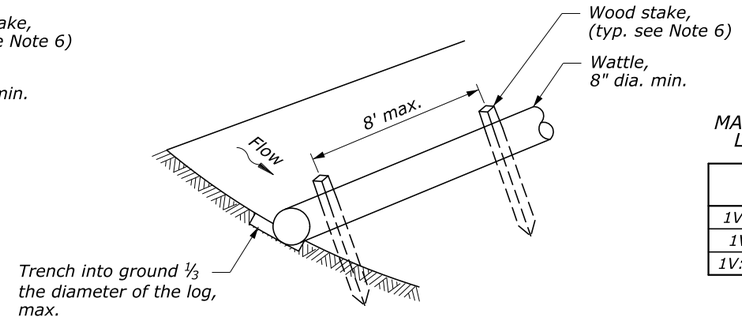

ENTRENCHED INSTALLATION ISOMETRIC VIEW

MAXIMUM ALLOWABLE SLOPE LENGTH ABOVE WATTLES

SLOPE	MAX INTERVAL
1V:4H or Flatter	20 ft
1V:4H - 1V:2H	15 ft
1V:2H or Steeper	10 ft

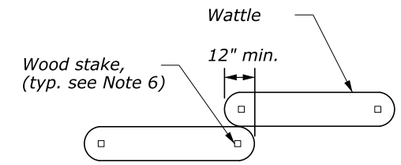

ROLL OVERLAP

NOTES:

1. Provide wattles meeting the requirements of Special Provisions SP08-R1671, Wattles.
2. Use wattles with a minimum 8-inch diameter. For drain inlet protection, use wattles with a minimum 12-inch diameter.
3. Prior to installation, clear all obstructions including rocks, clods, and debris greater than 1-inch that may interfere with proper function of the wattle.
4. For untrenched installation, blow or hand place mulch or compost on uphill side of the slope along the wattle.
5. Place wattles on level grade and parallel to contours. Extend both ends of the wattle at least 8 feet upslope at 45 degrees to the main alignment.
6. Use wood stakes with a minimum nominal cross section of 2-inch x 2-inch and of sufficient length to attain a minimum of 12 inches into the ground and 3 inches protruding above the roll. Furnish wood stakes meeting the requirements of NCDOT 2018 Standard Specifications 1060-12.
7. When more than one wattle is needed, overlap ends 12 inches minimum and stake.
8. Remove sediment deposits when accumulation is one-half the height of the exposed wattle.
9. Replace biodegradable wattles 6 months after installation and photodegradable wattles after 12 months after installation.
10. When wattles are required on paved surfaces, use gravel bags to support them as shown on the inlet protection detail.
11. Provide gravel bag weights meeting the requirements of Special Provisions SP08-R1671, Wattles.

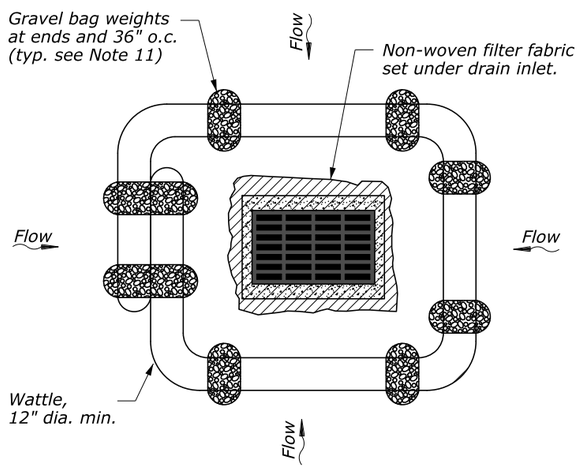

INLET PROTECTION

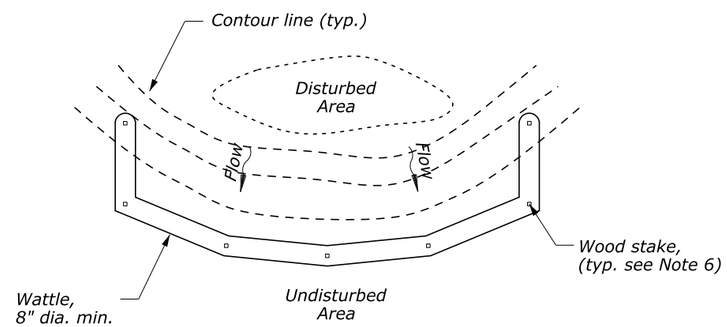

PLAN VIEW

WATTLE CHECK DAM SPACING TABLE

DITCH GRADE *	CHECK DAM SPACING(S) **	
	12" HIGH	18" HIGH
2%	50 ft	75 ft
3%	33 ft	50 ft
4%	25 ft	40 ft
5%	20 ft	30 ft
6%	16 ft	25 ft
7%	14 ft	21 ft
8%	12 ft	18 ft
9%	11 ft	16 ft
10%	10 ft	15 ft

* Do not install check dams on grades below 2%
** Adjust spacing as approved based on site conditions

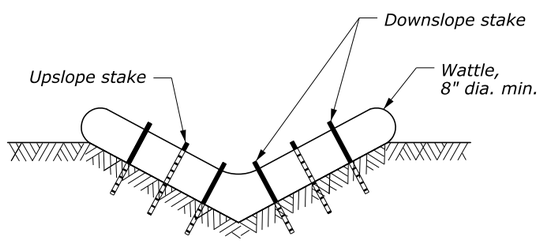

V-DITCH WATTLE CHECK DAM CROSS SECTION

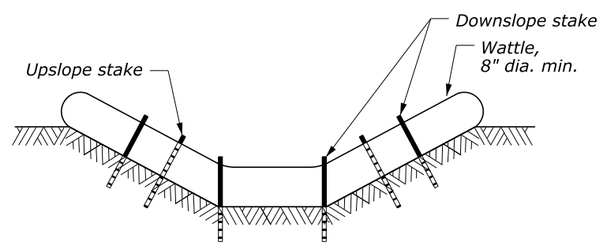

TRAPEZOIDAL DITCH WATTLE CHECK DAM CROSS SECTION

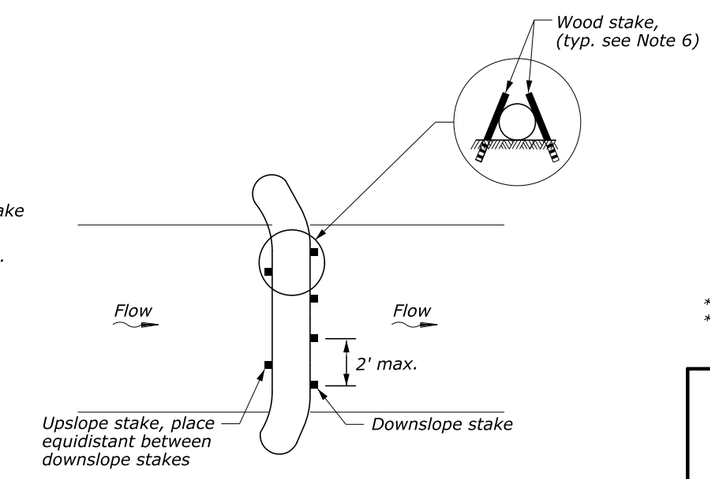

WATTLE CHECK DAM PLAN VIEW

NO SCALE

U.S. DEPARTMENT OF TRANSPORTATION
FEDERAL HIGHWAY ADMINISTRATION
EASTERN FEDERAL LANDS HIGHWAY DIVISION
STERLING, VIRGINIA

BLUE RIDGE PARKWAY

WATTLES

SUPPLEMENTAL TITLE

M:\PROJECTS_STATE_DOT\NC\blri_i26_repo\Proj_Dev\CADD\From_Eng_Support\As_Requested_3_2017\M30-sf15704_detail.dgn
12-Dec-2018 11:54 AM

STATE	PROJECT	SHEET NUMBER
NC	BLRI OVER I-26	M31

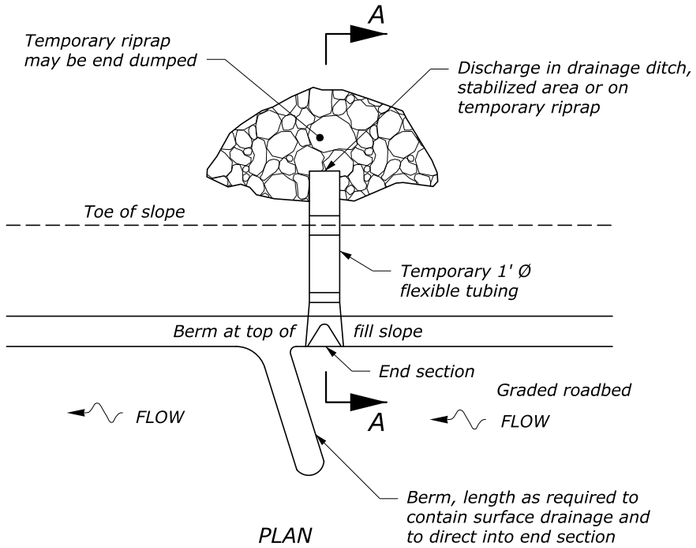

SLOPE DRAINS

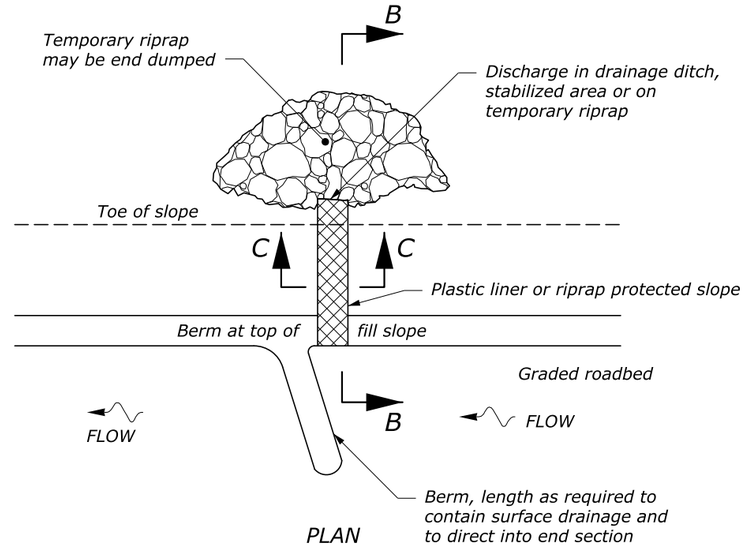

PLASTIC LINED WATERWAY

NOTES:

1. Use temporary slope drains (berms, drains, and riprap) as the embankment is constructed. Use spacings as shown on the Erosion and Sediment Control Plans or as designated by the Engineer. Place all slope drains at the end of each work shift. Use slope drains until the slopes are permanently stabilized.
2. Construct temporary berms at the top of all erodible cut slopes as shown on the Erosion and Sediment Control Plans or as designated by the Engineer. Use check dams to reduce the runoff velocity when existing grades are steep.
3. Do not use transverse or longitudinal joints in plastic liner. Plastic liner is not required for rock embankments.
4. Use toe-of-fill slope berms to divert offsite runoff away from disturbed areas.
5. Seed and mulch all cut slope berms and toe-of-fill berms immediately after berm construction.
6. Place rip rap as shown on NCDOT Standard Drawing 876.02.

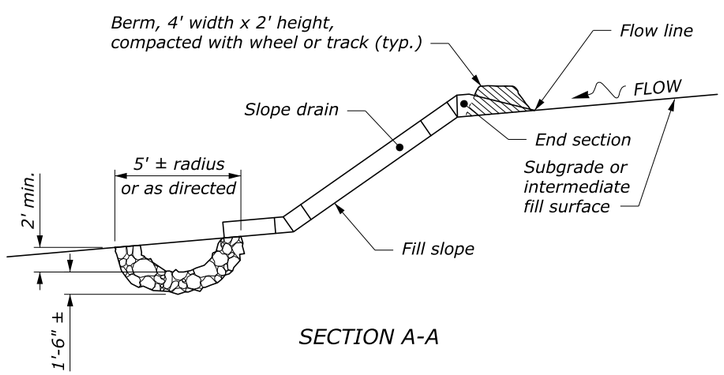

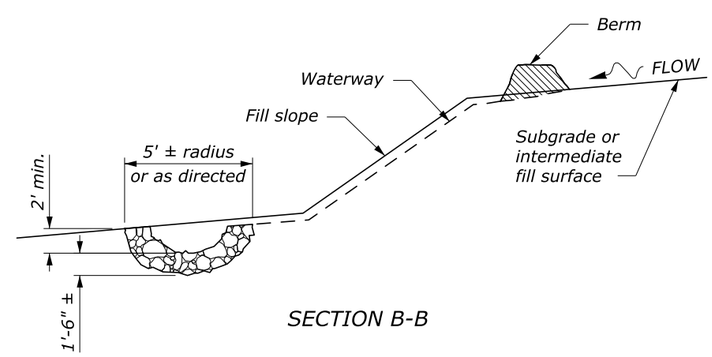

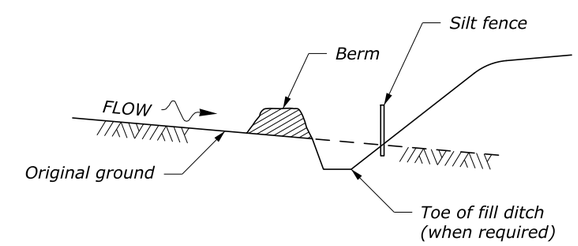

TOE-OF-FILL SLOPE BERM

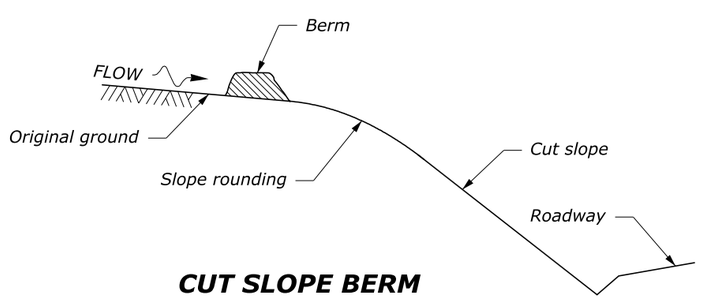

CUT SLOPE BERM

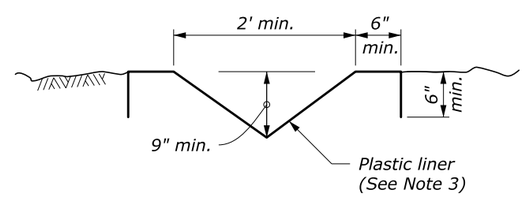

SECTION C-C

NO SCALE

U.S. DEPARTMENT OF TRANSPORTATION
FEDERAL HIGHWAY ADMINISTRATION
EASTERN FEDERAL LANDS HIGHWAY DIVISION
STERLING, VIRGINIA

BLUE RIDGE PARKWAY

TEMPORARY EROSION CONTROL BERMS, SLOPE DRAINS, AND LINED WATERWAYS

12-Dec-2018 04:34 PM M:\PROJECTS_STATE_DOT\NC\blri_i26_nepo\Proj_Dev\CADD\From_Eng_Support\As_Requested_3_2017\M31\Std57-7.dgn

STATE	PROJECT	SHEET NUMBER
NC	BLRI OVER I-26	M32

NOTES:

1. *Furnish pine bark mulch in accordance to Special Provisions*
2. *Furnish trees & shrubs as specified in plans & in accordance to Special Provisions*

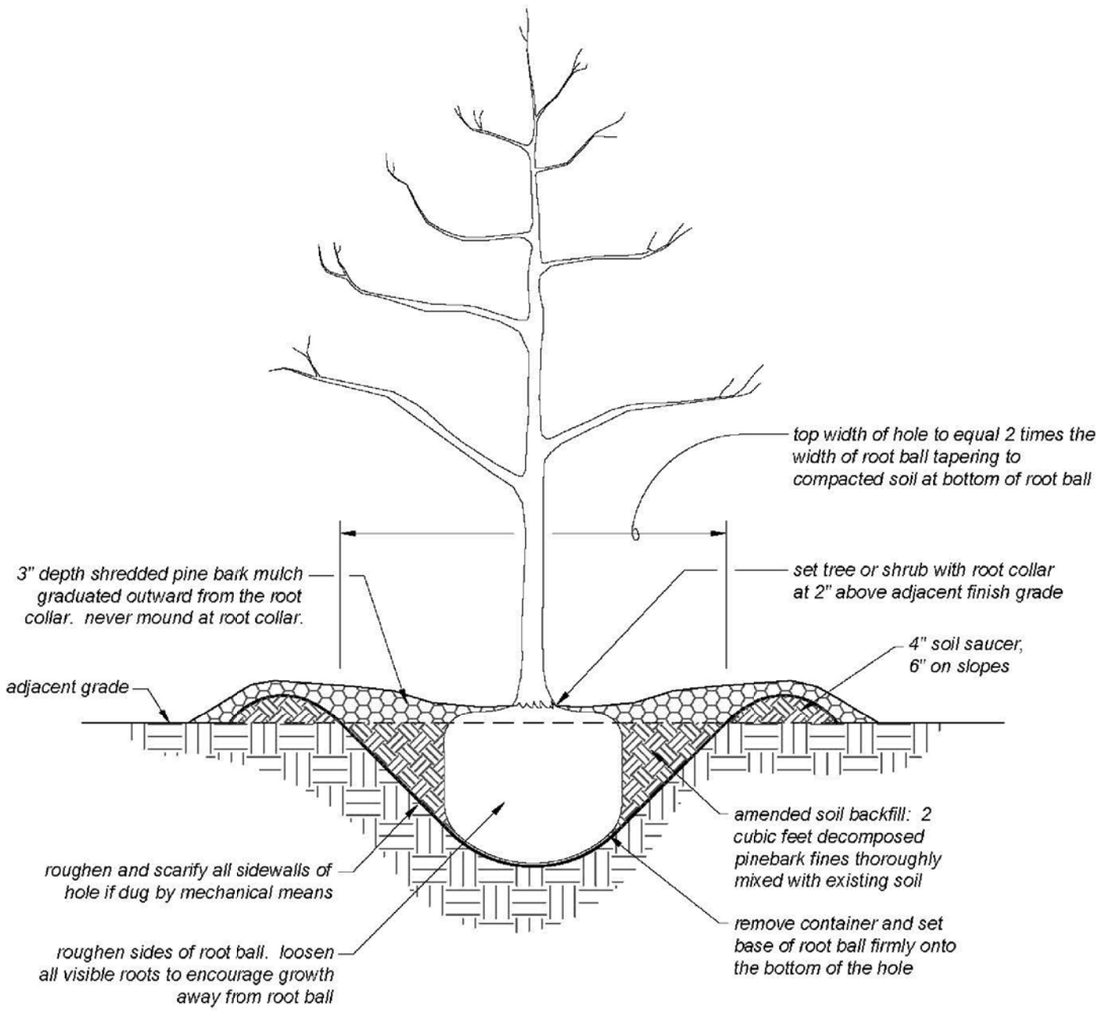

TYPICAL TREE AND SHRUB PLANTING

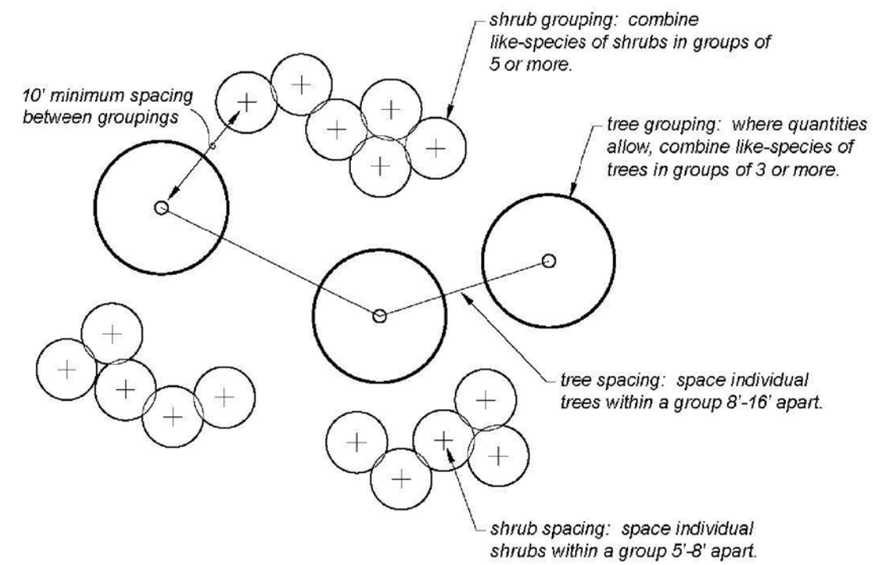

TYPICAL TREE AND SHRUB CLUSTER LAYOUT

U.S. DEPARTMENT OF TRANSPORTATION
FEDERAL HIGHWAY ADMINISTRATION
EASTERN FEDERAL LANDS HIGHWAY DIVISION
STERLING, VIRGINIA

BLUE RIDGE PARKWAY

TREES AND SHRUBS PLANTING METHODS

12-Dec-2018 12:02 PM M:\PROJECTS_STATE_DOT\NC\blri_i26_repo\Proj_Dev\CADD\From_Eng_Support\As_Requested_3_20\M32_st62650_detail.dgn

STATE	PROJECT	SHEET NUMBER
NC	BLRI OVER I-26	N01

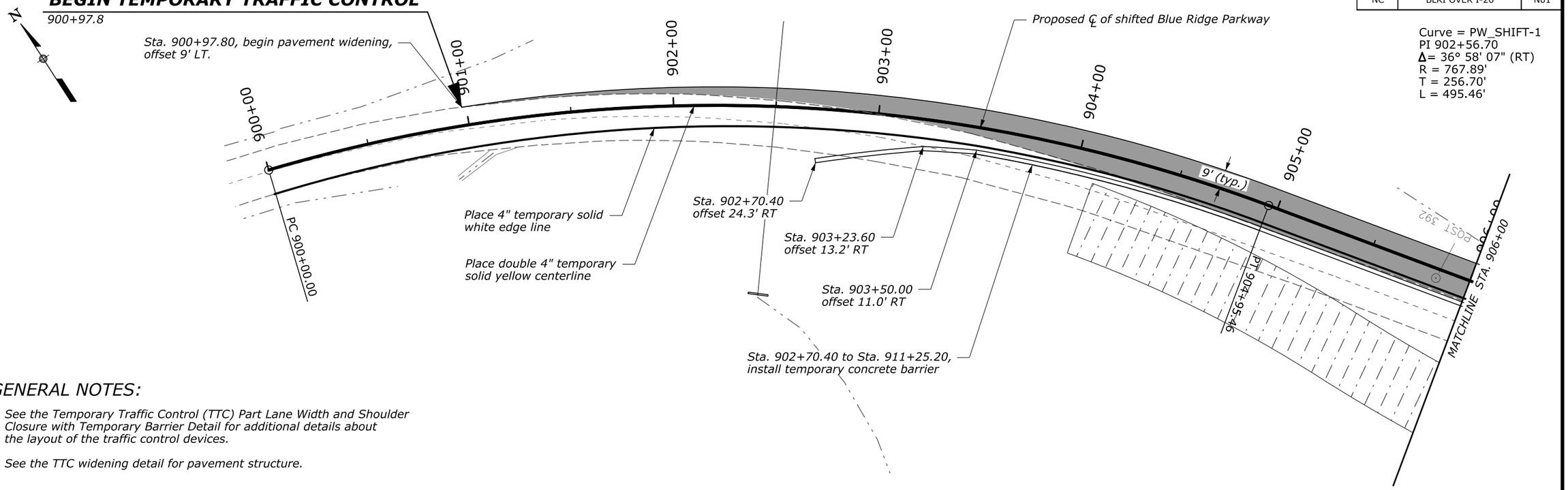

GENERAL NOTES:

1. See the Temporary Traffic Control (TTC) Part Lane Width and Shoulder Closure with Temporary Barrier Detail for additional details about the layout of the traffic control devices.
2. See the TTC widening detail for pavement structure.

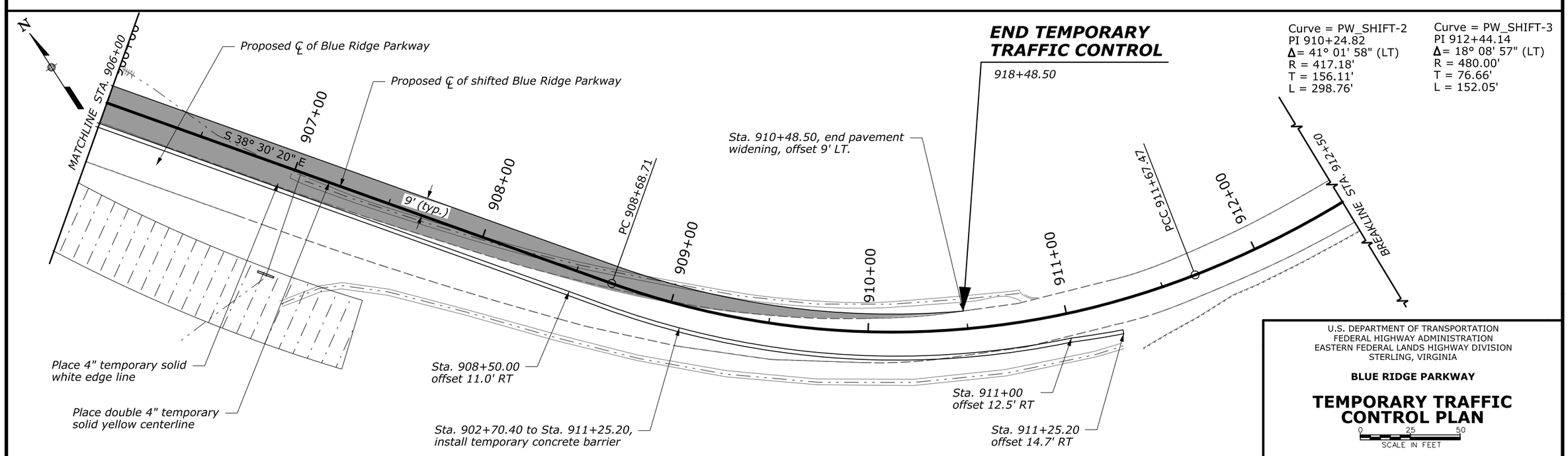

U.S. DEPARTMENT OF TRANSPORTATION
FEDERAL HIGHWAY ADMINISTRATION
EASTERN FEDERAL LANDS HIGHWAY DIVISION
STERLING, VIRGINIA

BLUE RIDGE PARKWAY

TEMPORARY TRAFFIC CONTROL PLAN

0 25 50
SCALE IN FEET

M:\PROJECTS_STATE_DOT\NC\blri_I26_nepa\Proj_Dev\CADD\From_Eng_Support\As_Requested_3_2017\N01-BLRI_I26_NEPA_ttc.dgn
21-Dec-2018 09:05 AM

STATE	PROJECT	SHEET NUMBER
NC	BLRI OVER I-26	N02

NOTES:

1. *Prepare the surface on which the aggregate course is placed according to Articles 225 and 500 of the NCDOT 2018 Standard Specifications.*
2. *After traffic is shifted to the reconstructed Parkway, remove temporary pavement and base course. Restore surface to the existing contours prior to constructing the temporary widening and establish turf on all disturbed areas in accordance with Articles 1060 and 1660 of the NCDOT 2018 Standard Specifications.*

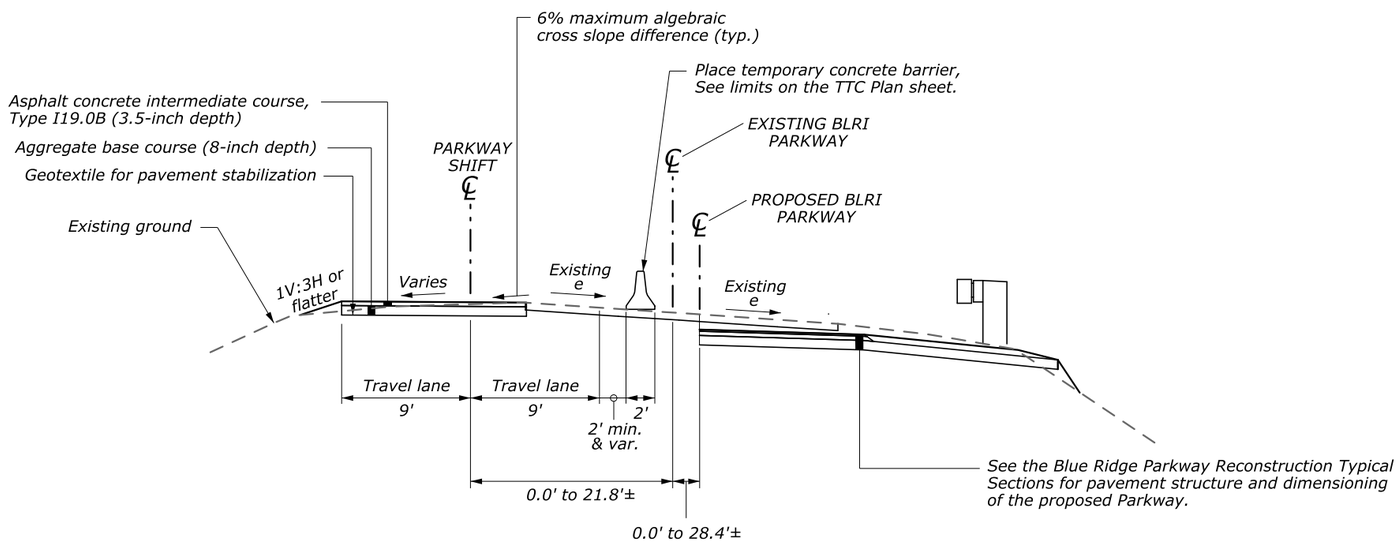

PARKWAY SHIFT WIDENING

Sta. 901+00.00 to Sta. 904+09.50
Sta. 908+64.30 to Sta. 910+76.70

NOT TO SCALE

U.S. DEPARTMENT OF TRANSPORTATION
FEDERAL HIGHWAY ADMINISTRATION
EASTERN FEDERAL LANDS HIGHWAY DIVISION
STERLING, VIRGINIA

BLUE RIDGE PARKWAY

TEMPORARY TRAFFIC CONTROL WIDENING DETAIL

SHEET 1 OF 2

08-Dec-2018 10:22 PM M:\PROJECTS_STATE_DOT\NC\blri_i26_nepa\Proj_Dev\CADD\From_Eng_Support\As_Requested_3_2017\N02-BLRI_I26_NEPA_ttc.dgn

STATE	PROJECT	SHEET NUMBER
NC	BLRI OVER I-26	N03

NOTES:

1. Prepare the surface on which the aggregate course is placed according to Articles 225 and 500 of the NCDOT 2018 Standard Specifications.
2. Use temporary shoring to maintain traffic on existing Parkway during construction. Submit shoring plan to the Engineer for approval.
3. After traffic is shifted to the reconstructed Parkway, remove temporary pavement and base course. Restore surface to the existing contours prior to constructing the temporary widening and establish turf on all disturbed areas in accordance with Articles 1060 and 1660 of the NCDOT 2018 Standard Specifications.

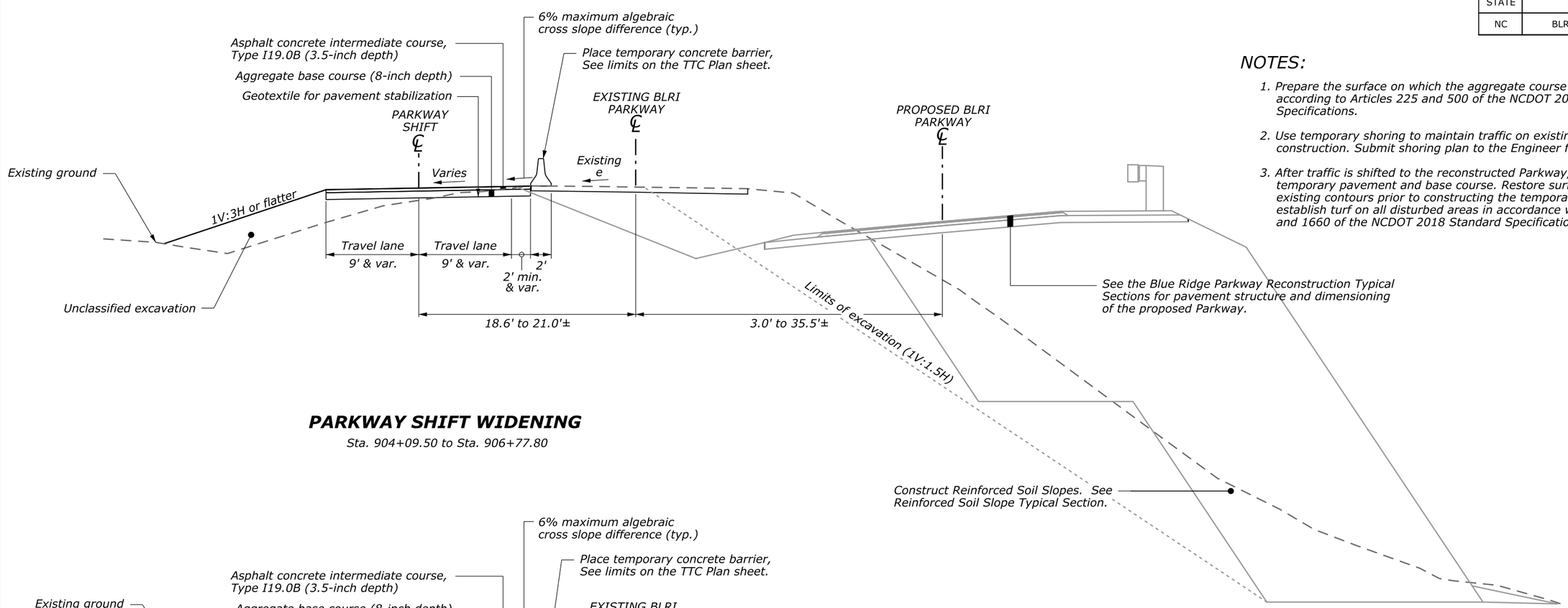

PARKWAY SHIFT WIDENING

Sta. 904+09.50 to Sta. 906+77.80

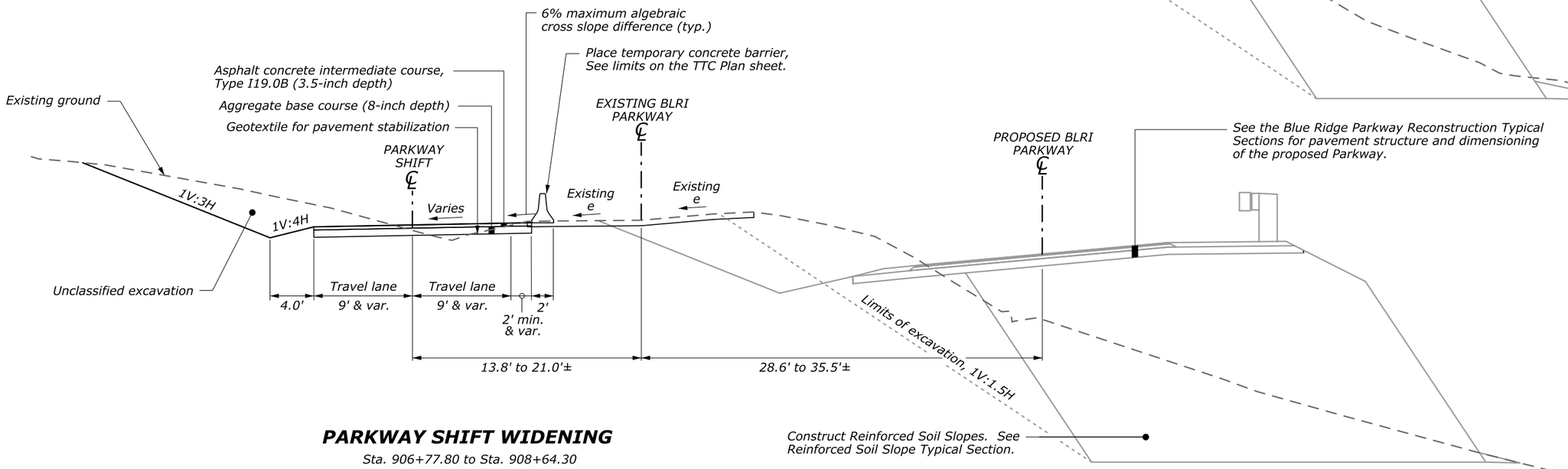

PARKWAY SHIFT WIDENING

Sta. 906+77.80 to Sta. 908+64.30

NOT TO SCALE

U.S. DEPARTMENT OF TRANSPORTATION
FEDERAL HIGHWAY ADMINISTRATION
EASTERN FEDERAL LANDS HIGHWAY DIVISION
STERLING, VIRGINIA

BLUE RIDGE PARKWAY

TEMPORARY TRAFFIC CONTROL WIDENING DETAIL

SHEET 2 OF 2

08-Dec-2018 10:23 PM M:\PROJECTS_STATE_DOT\NC\blri_i26_nepa\Proj_Dev\CADD\From_Eng_Support\As_Requested_3_2017\N03-BLRI_I26_NEPA_ttc.dgn

STATE	PROJECT	SHEET NUMBER
NC	BLRI OVER I-26	N04

LENGTH AND SPACING TABLE

APPROACH SPEED* MPH	MINIMUM TAPER LENGTH FEET	BUFFER SPACE LENGTH FEET	CHANNELIZING DEVICE TAPER AREA (SPACING IN FEET)	CHANNELIZING DEVICE BUFFER SPACE (SPACING IN FEET)	CHANNELIZING DEVICE WORK SPACE (SPACING IN FEET)	WORK ZONE CLEAR ZONE WIDTH FEET
20	Shifting taper formula:	115	20	40	40	10
25	$L = \frac{WS^2}{120}$ for $S \leq 40$ MPH	155	25	50	50	10
30		200	30	60	60	10
35	$L = \frac{WS}{2}$ for $S \geq 45$ MPH	250	35	70	70	10
40		305	40	80	80	15
45	Where:	360	45	90	90	20
50	L = Minimum length of taper	425	50	100	100	20
55	W = Width of offset in feet	495	55	110	110	20
60	S = Numerical value of posted speed	570	60	120	120	30
65	limit or 85 percentile speed prior	645	65	130	130	30
70	to work in miles per hour	730	70	140	140	30

* Approach speed based on the regulatory posted speed, not the advisory speed.

SIGN SPACING TABLE

ROAD TYPE	DISTANCE BETWEEN SIGNS IN FEET A	B	C
Urban and Rural 30 MPH and less	100	100	100
Urban and Rural 35 MPH to 50 MPH	350	350	350
Rural greater than 50 MPH	500	500	500
Expressway / Freeway	1000	1500	2640

NOTES:

1. Signs are shown for one direction of travel only. Place devices similar to those depicted for the opposite direction of travel.
2. Final location and spacing of signs and devices may be changed to fit field conditions as approved by the Engineer.
3. If the roadway surface is paved, install temporary pavement extend markings to connect zones.
4. If closure is completely within the project limits, eliminate the "ROAD WORK AHEAD" (W20-1) and "END ROAD WORK" (G20-2) signs.
5. Install "PASS WITH CARE" sign (R4-2) at ends of no-passing zone if directed by the Engineer.
6. Place the barrier according to the AASHTO Roadside Design Guide. Terminate barrier ends outside the work zone clear zone or protect the barrier ends with a crash cushion.
7. Do not allow equipment, materials, or vehicles to be parked or stored in the buffer space.

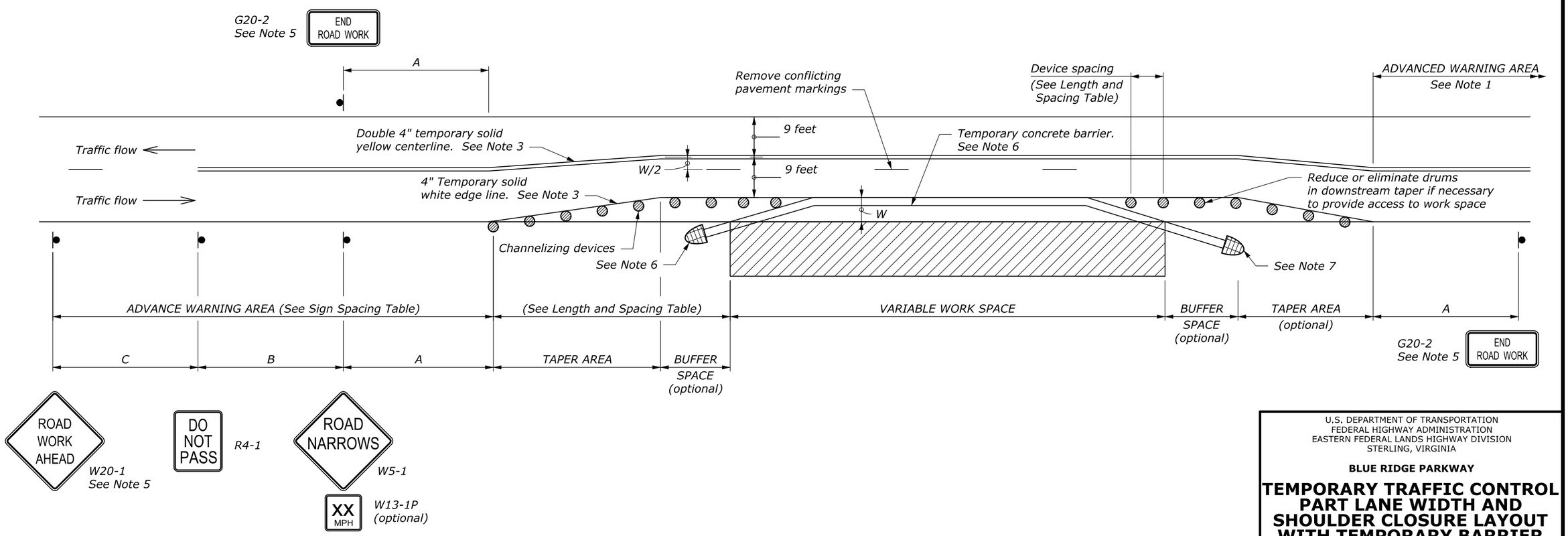

NO SCALE

U.S. DEPARTMENT OF TRANSPORTATION
FEDERAL HIGHWAY ADMINISTRATION
EASTERN FEDERAL LANDS HIGHWAY DIVISION
STERLING, VIRGINIA

BLUE RIDGE PARKWAY

TEMPORARY TRAFFIC CONTROL PART LANE WIDTH AND SHOULDER CLOSURE LAYOUT WITH TEMPORARY BARRIER

12-Dec-2018 12:47 PM

STATE	PROJECT	SHEET NUMBER
NC	BLRI OVER I-26	P01

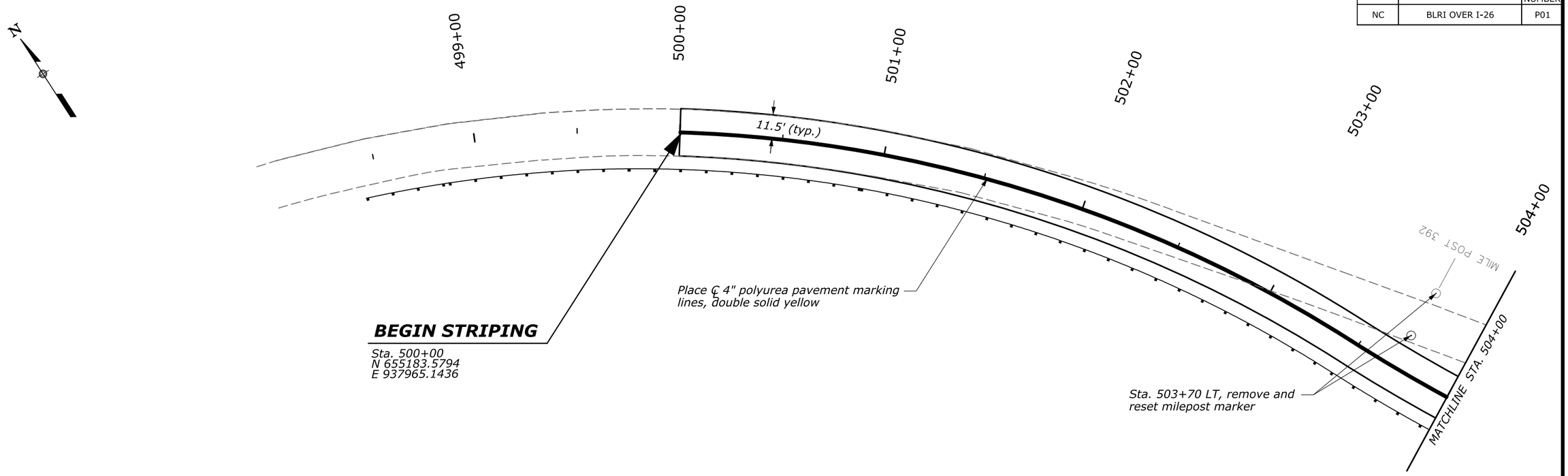

GENERAL NOTE:

Tie the proposed pavement marking lines to the existing pavement marking lines.

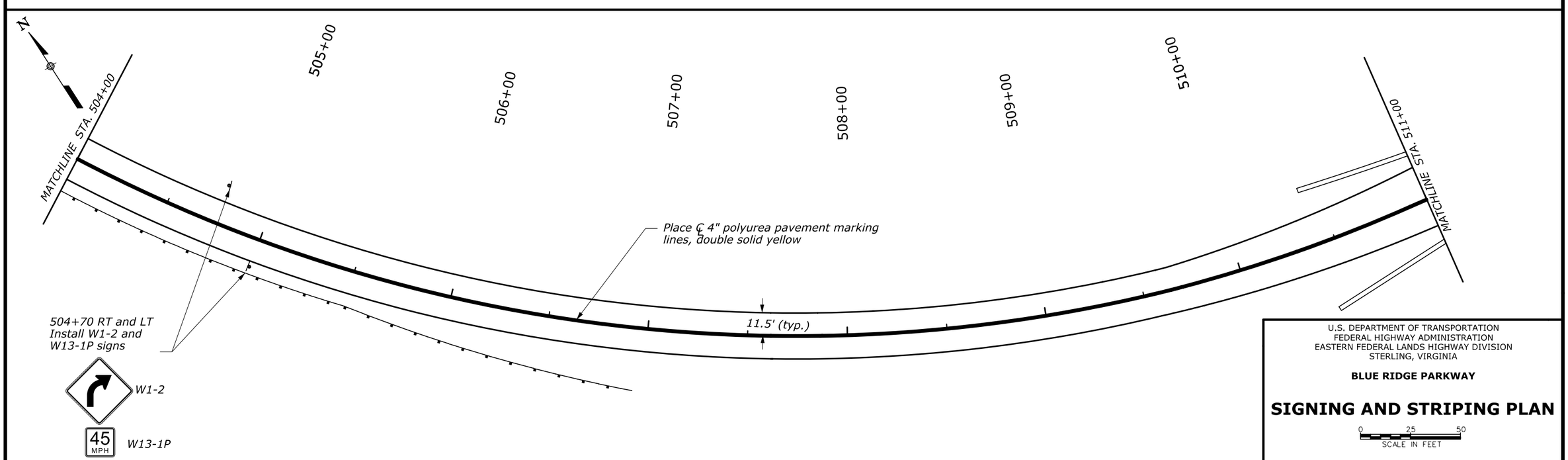

U.S. DEPARTMENT OF TRANSPORTATION
FEDERAL HIGHWAY ADMINISTRATION
EASTERN FEDERAL LANDS HIGHWAY DIVISION
STERLING, VIRGINIA

BLUE RIDGE PARKWAY

SIGNING AND STRIPING PLAN

0 25 50
SCALE IN FEET

21-Dec-2018 02:34 PM M:\PROJECTS_STATE_DOT\NC\blri_i26_nepa\Proj_Dev\CADD\From_Eng_Support\As_Requested_3_20\P\P01-P03-BLRI_I26_NEPA_striping.dgn

STATE	PROJECT	SHEET NUMBER
NC	BLRI OVER I-26	P02

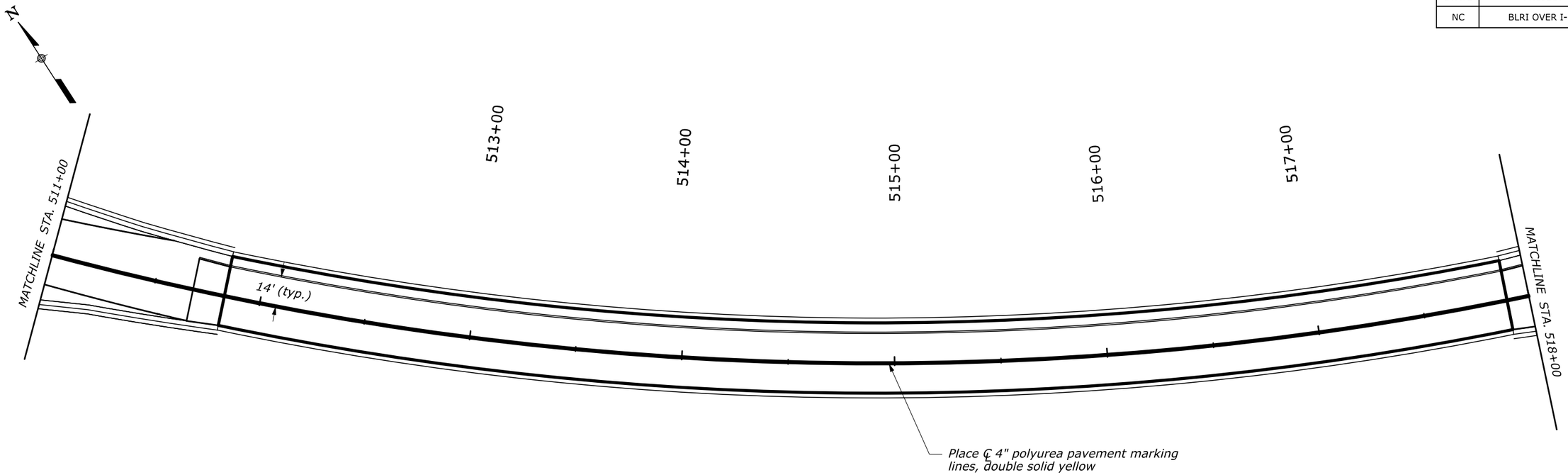

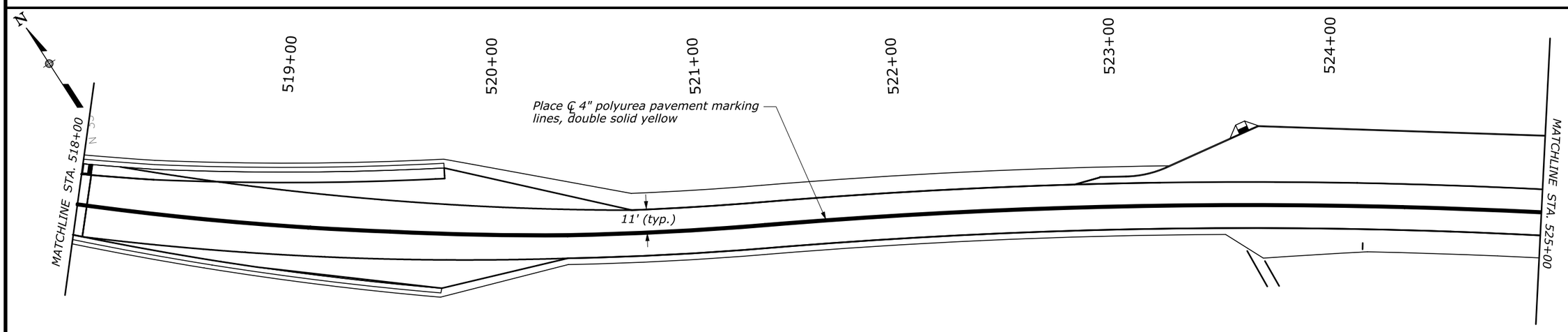

U.S. DEPARTMENT OF TRANSPORTATION
FEDERAL HIGHWAY ADMINISTRATION
EASTERN FEDERAL LANDS HIGHWAY DIVISION
STERLING, VIRGINIA

BLUE RIDGE PARKWAY

SIGNING AND STRIPING PLAN

0 25 50
SCALE IN FEET

21-Dec-2018 02:33 PM M:\PROJECTS_STATE_DOT\NC\blri_i26_nepa\Proj_Dev\CADD\From_Eng_Support\As_Requested_3_20\P\P01-P03-BLRI_I26_NEPA_stripingdgn

STATE	PROJECT	SHEET NUMBER
NC	BLRI OVER I-26	P03

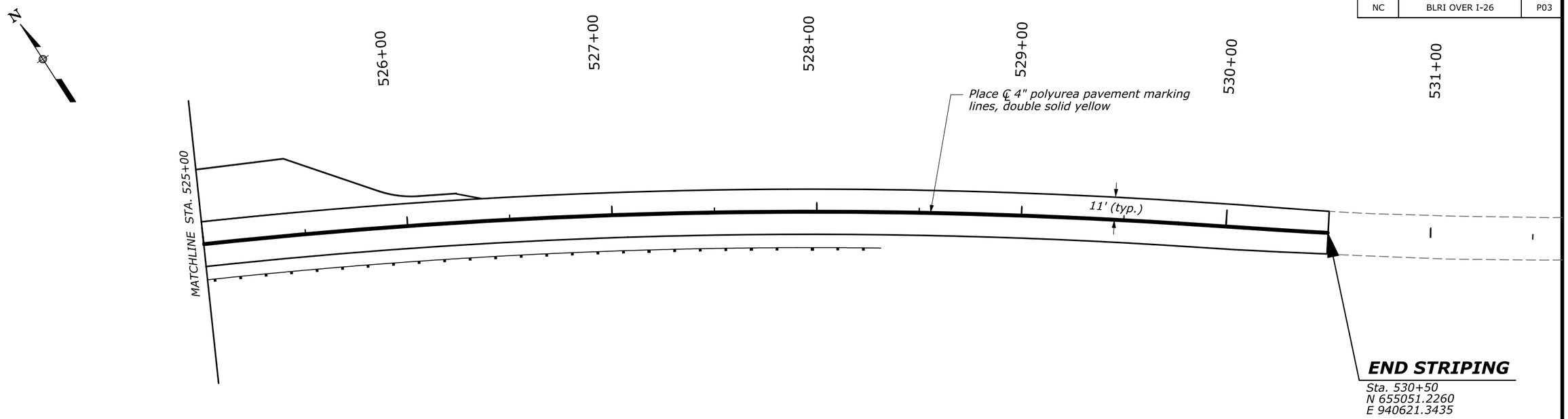

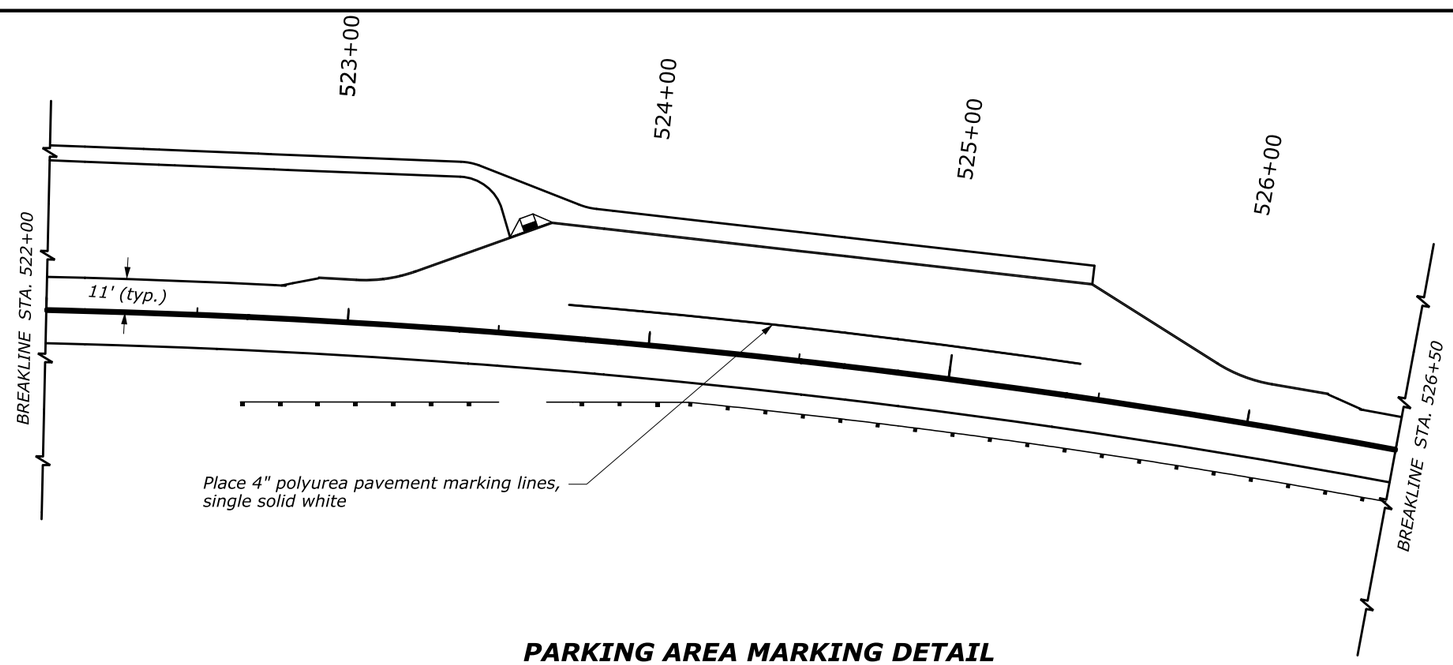

PARKING AREA MARKING DETAIL

U.S. DEPARTMENT OF TRANSPORTATION
FEDERAL HIGHWAY ADMINISTRATION
EASTERN FEDERAL LANDS HIGHWAY DIVISION
STERLING, VIRGINIA

BLUE RIDGE PARKWAY

SIGNING AND STRIPING PLAN

0 25 50
SCALE IN FEET

21-Dec-2018 02:30 PM M:\PROJECTS_STATE_DOT\NC\blri_I26_repo\Proj_Dev\CADD\From_Eng_Support\As_Requested_3_20\TP01-P03-BLRI_I26_NEPA_striping.dgn

STATE	PROJECT	SHEET NUMBER
NC	BLRI OVER I-26	R01

I. General:

"NCDOT" = North Carolina Department of Transportation

All elevations are in feet.

Furnish Class AA concrete in cast-in-place substructures according to the NCDOT Standard Specifications, unless noted otherwise in the plans.

Furnish Class Special concrete in the bridge railing, sidewalk, and approach slabs according to the Special Provisions, unless noted otherwise in the plans.

Furnish non-ferrous reinforcing steel bar supports in cast-in-place concrete.

For Maintenance and Protection of Traffic beneath Proposed Structure at Station 514+86.30, see Special Provision.

For Thermal Sprayed Coatings (Metallization), see Special Provision.

For Post Tensioning, see Special Provision.

For Precast Segmental Bridge Construction, see Special Provision.

For High Strength Concrete, see Special Provision.

For Post-Tensioning Grout, see Special Provision.

For Disc Bearings, see Special Provision.

For Modular Expansion Joint Seals, see Special Provision.

For Falsework and Formwork, see Special Provision.

For Submittal of Working Drawings, see Special Provision.

For Epoxy Jointing of Precast Segments, see Special Provision.

For Crane Safety, see Special Provision.

For Mass Concrete, see Special Provision.

For Demolition of Existing Bridge, see Special Provision.

For Bridge Deck and Approach Slab Rideability (IRI), see Special Provision.

For Latex Modified Concrete (LMC) Overlay, see Special Provision.

For Caltrans Barrier Rail, see Special Provision.

II. Specifications:

1. *Construction:*

   NCDOT Standard Specifications for Roads and Structures, January 2018.

   AASHTO LRFD Bridge Construction Specifications, 3rd Edition, 2010, with interim revisions through 2016.

   Project Special Provisions BLRI Over I-26

2. *Design*

   NCDOT Structure Design Manual, with revisions and updates through December 2016.

   AASHTO LRFD Bridge Design Specifications, 7th Edition, 2014, with interim revisions and errata through 2016.

   CEB-FIP Model Code, 1990.

III. Design Loads:

1. *Load factors and load combinations:*

   Generally follow AASHTO LRFD Section 1 and 3, with the exceptions, additions, and/or modifications as noted in these design criteria.

   Load modifiers:

AASHTO LRFD LOAD MODIFIERS		
Ductility η_D	*Redundancy* η_R	*Operational Importance* η_I
1.0	*1.0*	*1.0*

III. Design Loads (Cont.):

2. *Dead loads:*

   Unit weight of concrete: Per AASHTO LRFD Bridge Design Specifications

   Traffic Barrier Rail: Caltrans Type 80SW, 580 LB/LF, plus additional 880 LB/LF for lightweight concrete sidewalk (Unit weight: 110 LB/CF).

   Allowance for future wearing surface: 25 LB/SF

3. *Earth pressure loads:*

   Per AASHTO LRFD Bridge Design Specifications

4. *Creep, shrinkage, secondary forces from post-tensioning, and locked in forces due to the construction process (including jacking of cantilevers in segmental construction):*

   Per AASHTO LRFD Bridge Design Specifications and the CEP-FIP Model Code

   Design relative humidity = 70%

   The average age at initial loading has been assumed to be 90 days for determination of creep and shrinkage parameters.

5. *Live load, dynamic load allowance (impact), and pedestrian live load:*

   Per AASHTO LRFD Bridge Design Specifications

   Vehicular design live load: HL-93

6. *Braking force:*

   5% of design truck plus lane load or 5% of design tandem plus lane load per the NCDOT Structure Design Manual

7. *Centrifugal force:*

   Per AASHTO LRFD Bridge Design Specifications. Design speed = 45 MPH.

8. *Wind loads:*

   Per AASHTO LRFD Bridge Design Specifications

   Base wind velocity = 115 MPH at 33' height (open country)

9. *Earthquake effects:*

   Per AASHTO LRFD Bridge Design Specifications

10. *Thermal effects:*

    Per AASHTO LRFD Bridge Design Specification and the NCDOT Structure Design Manual

    Range of temperatures for stresses resulting from variations in temperature:

    Concrete structures: 10°F to 110°F

    Assumed normal fabrication and erection temperature: 60°F

    Temperature gradient: Per AASHTO LRFD Bridge Specifications for Solar Radiation Zone 3.

    Range of temperatures for sizing of expansion joints (post-tensioned concrete):

    Concrete structures: 10°F to 110°F

    Total movement, M

    = 1.25 X long-term creep/shrinkage/post-tensioning + 1.2 X temperature

11. *Construction loads:*

    Formwork and falsework: AASHTO Guide Design Specification for Bridge Temporary Works, 1st Edition, 1995, with interim revisions through 2008

    Segmental superstructure construction: AASHTO LRFD Bridge Design Specifications

    Segment lifting device: 100 kips centered along box girder at 2 feet from tip of previously erected segment and 400 kips centered along box girder at ℄ pier. Weight of device is assumed evenly distributed to each web. Support points and anchor points for device are assumed to be within 3 feet of face of web.

    Work platform: 5 kips

    Closure joint form and strong back: 10 kips

IV. Materials:

1. *Concrete:*

   Concrete strengths will be as follows:

Location	*Class*	*28-day strength*	*Release strength*
Cast-in-place columns, bent and end bent caps, parapets, pedestals, bent cap steps, footings, moment slab	*AA*	*4.5 KSI*	*N/A*
Precast, prestressed segmental piers, cast-in-place pier footings	*HIGH STRENGTH*	*6.0 KSI*	*4.8 KSI*
Precast, prestressed segmental box girders (including cast-in-place joints), bridge rails, approach slabs	*HIGH STRENGTH*	*6.0 KSI*	*4.8 KSI*

   Superstructure concrete will contain a minimum of 25% fly ash Class F or a minimum of 40% ground granulated blast furnace slag.

   Substructure concrete will contain a minimum of 25% fly ash Class F or a minimum of 40% ground granulated blast furnace slag. In addition, silica fume at a minimum of 5% shall be used in footings, columns, and piles.

   For high strength concrete, see Special Provisions.

   Calcium nitrite will be used in the superstructure and substructure precast concrete (including piles) and cast-in-place concrete barrier rail parapets at a rate of 4 gallons per cubic yard.

   Chamfer all exposed corners of concrete structures ¾", unless otherwise noted in the plans.

2. *Post-tensioning steel for precast segmental box girders, columns, & caps*

   See post-tensioning Special Provision.

   Prestressing parameters (strand):

   Post-tensioning strand will conform to ASTM A416, Grade 270, low relaxation, 0.6" diameter 7-wire strand

   Ultimate strength: 270 KSI

   Modulus of elasticity (for design): 28,500 KSI

   Friction coefficient (polyethylene duct): 0.23

   Wobble coefficient (internal tendons): 0.0002 RAD/FT

   Anchor set: 0.375"

   Maximum jacking stress prior to seating: 216 KSI

   Maximum anchor stress after anchor set: 189 KSI

   Maximum stress after anchor set away from anchor: 200 KSI

U.S. DEPARTMENT OF TRANSPORTATION
FEDERAL HIGHWAY ADMINISTRATION
EASTERN FEDERAL LANDS HIGHWAY DIVISION

BLUE RIDGE PARKWAY

BRIDGE OVER I-26

GENERAL NOTES - 1

NO.	DATE	BY	REVISIONS	NO.	DATE	BY	REVISIONS	DESIGNED BY	DRAWN BY	CHECKED BY	SCALE	PROJECT TEAM LEADER	BRIDGE PLAN SHEET	DATE	BRP NO.
								CC/CWN	CC/CWN	HC	No Scale	George Choubah	1 of 228	December 2018	BRP-1265

IV. Materials (Cont.):

2. Post-tensioning steel for precast segmental box girders, columns, & caps (Cont.):

Prestressing parameters (bar):

Post-tensioning bar will conform to ASTM A722, Grade 150 Type II

Modulus of elasticity (for design): 30,000 KSI

Maximum and required jacking stress: 108 KSI (unless noted otherwise)

Maximum anchor stress at anchor: 105 KSI (unless noted otherwise)

Wobble coefficient: 0.0002 RAD/FT

Anchor set: 0.0625"

3. Reinforcing steel:

Reinforcing steel and epoxy coated reinforcing steel will conform to ASTM A615, Grade 60 deformed.

Provide 2-inch cover for reinforcing steel unless noted otherwise.

4. Bearings:

Disc bearings will be per Special Provisions.

Bearings are designed for future replacement.

5. Structural steel, steel pipe, and related steel items:

When called for in the plans, provide galvanizing in accordance with the NCDOT Standard Specifications (Section 1076).

Steel H-Piles will conform to ASTM A572, Grade 50.

V. Allowable Stresses:

1. Reinforced concrete elements:

For pier footings, minimum concrete strength : 6.0 ksi

For all other reinforced concrete elements, per AASHTO LRFD Bridge Design Specifications and NCDOT Structure Design Manual.

2. Precast segmental concrete box girder superstructures:

Per AASHTO LRFD Bridge Design Specifications, as listed below:

During construction:

Temporary concrete compressive stress limits before losses: 60% of concrete strength at age of check (per AASHTO LRFD Aricle 5.9.4.1.1)

Temporary concrete tensile stress limits before losses (permanent loads only): no tension (per AASHTO LRFD Table 5.9.4.1.2-1)

Temporary concrete tensile stress limits before losses (with construction loadings applied): based on applicable loading condition of AASHTO LRFD Table 5.14.2.3.3-1

After construction:

Concrete compressive stress limits at Service limit state after losses (sum of effective prestress and permanent loads): 2.7 KSI (per AASHTO LRFD Table 5.9.4.2.1-1)

Concrete compressive stress limits at Service limit state after losses: 3.6 KSI (per AASHTO LRFD Table 5.9.4.2.1-1 and adjusted where required by the section slenderness factor)

Concrete tensile stress limits at Service limit state after losses (longitudinal): no tension (per AASHTO LRFD Table 5.9.4.2.2-1)

Concrete tensile stress limits at Service limit state after losses (transverse): 0.230 KSI (per AASHTO LRFD Table 5.9.4.2.2-1)

Principal concrete tensile stress in web at neutral axis at service limit state after losses: 0.270 KSI (per AASHTO LRFD Table 5.9.4.2.2-1)

Shear and torsion design at the Strength limit state will be per AASHTO LRFD Article 5.8.6.

V. Allowable Stresses (Cont.):

3. Superstructure segment casting and erection:

The following minimum concrete strength limits shall be observed:

Prior to lifting segments or lowering support forms: 2.5 KSI

Prior to full transverse post-tensioning: 6.0 KSI

Prior to longitudinal post-tensioning of precast segments: 6.0 KSI

Prior to stressing longitudinal post-tensioning (cast-in-place closure joints only): 2.5 KSI

4. Precast segmental concrete column segments:

Per AASHTO LRFD Bridge Design Specifications, as listed below:

During construction:

Temporary concrete compressive stress limits before losses: 60% of concrete strength at age of check (per AASHTO LRFD Aricle 5.9.4.1.1)

Temporary concrete tensile stress limits before losses (permanent loads only): no tension (per AASHTO LRFD Table 5.9.4.1.2-1)

Temporary concrete tensile stress limits before losses (with construction loadings applied): based on applicable loading condition of AASHTO LRFD Table 5.14.2.3.3-1

After construction:

Concrete compressive stress limits at Service limit state after losses (sum of effective prestress and permanent loads): 2.7 KSI (per AASHTO LRFD Table 5.9.4.2.1-1)

Concrete compressive stress limits at Service limit state after losses: 3.6 KSI (per AASHTO LRFD Table 5.9.4.2.1-1 and adjusted where required by the section slenderness factor)

Concrete tensile stress limits at Service limit state after losses: no tension (per AASHTO LRFD Table 5.9.4.2.2-1)

Shear and torsion design at the Strength limit state will be per AASHTO LRFD Article 5.8.6.

5. Column segment casting and erection:

The following minimum concrete strength limits will be observed:

Minimum concrete strength prior to lifting segments: 2.5 KSI

Minimum concrete strength prior to stressing post-tensioning: 6.0 KSI

VII. Segmental Construction:

Superstructure:

For proposed erection sequence, see construction sequence drawings.

The contractor will submit any deviation from the proposed erection sequence to the engineer for approval.

The contractor will ensure that the structure remains safe and stable under all anticipated construction stages and loading conditions.

The design is based on a continuous construction season with no stoppage period.

For all stages during erection, construction loads will be submitted to the engineer for approval.

The contractor will submit precast segment shop drawings and erection procedure manuals in accordance with the Special Provisions. The contractor's specialty engineer will detail all reinforcing steel and all tendons with the proper vertical and horizontal alignment for each precast segment and closure joint.

Anchorage systems and blockouts will be determined by the post-tensioning system used. The contractor will determine post-tensioning dimensions and will adjust blockouts as required for stressing equipment. Approved local anchorage zone reinforcing is required at the ends of all post-tensioning tendons, unless otherwise noted. The contractor will adjust local anchorage zone reinforcing and other reinforcing as necessary to clear tendons.

If stacking of the segments is desired, submit a segment stacking plan and a calculation demonstrating adequate performance of the stacked design to the engineer for approval prior to start of segment stacking. The performance of stacking and condition of segments after stacking remains the responsiblity of the contractor.

Segment joints will be epoxy bonded per the epoxy jointing of precast segments Special Provision.

The following activities are not allowed over traffic: placement of segments and beams, placement and removal of formwork, placement and removal of concrete.

Substructure:

The contractor will submit precast segment and bent cap shop drawings based on the details provided on the plans and in accordance with the Special Provisions.

Anchorage systems will be designed by the post-tensioning bar/tendon supplier for the system used in accordance with the Special Provisions. Dimensions of anchor plates and blockouts will be designed by the supplier. Local zone reinforcing will be designed by the supplier and incorporated into the shop drawings.

Segment joints shall be epoxy bonded per the epoxy jointing of precast segment Special Provisions.

VIII Foundations:

Abutments:

Resistance factor for verification of driven piles established by dynamic testing only: 0.75

Piers:

Verification of competent rock should be performed in the field and approved by the CO prior to placing the concrete.

Rock damaged during excavation should be removed and replaced with concrete with minimum compressive strength of 4 ksi.

U.S. DEPARTMENT OF TRANSPORTATION
FEDERAL HIGHWAY ADMINISTRATION
EASTERN FEDERAL LANDS HIGHWAY DIVISION

BLUE RIDGE PARKWAY

BRIDGE OVER I-26

GENERAL NOTES - 2

NO.	DATE	BY	REVISIONS	NO.	DATE	BY	REVISIONS	DESIGNED BY	DRAWN BY	CHECKED BY	SCALE	PROJECT TEAM LEADER	BRIDGE PLAN SHEET	DATE	BRP NO.
								CC/CWN	CC/CWN	HC	No Scale	George Choubah	2 of 228	December 2018	BRP-1265

ACTUAL FILE:R02_BLRI_I26_GN - 2.DGN
M:\PROJECTS_STATE_DOT\NC\blri_I26_nepo\Bridge\Microstation\Bridge Design Files\0_OPROJECTS.dgn
14-Dec-2018 12:16 PM

STATE	PROJECT	SHEET NUMBER
NC	BLRI OVER I-26	R03

Sheet #	Sheet Description
1	General Notes - 1
2	General Notes - 2
3	List of Sheets
4	Site Plan
5	Plan and Elevation
6	Foundation Layout
7	Abutment 1 Layout
8	Abutment 1 Reinforcement
9	Wingwall A Layout
10	Wingwall A Reinforcement
11	Wingwall B Layout
12	Wingwall B Reinforcement
13	Abutment 2 Layout
14	Abutment 2 Reinforcement
15	Wingwall C Layout
16	Wingwall C Reinforcement
17	Wingwall D Layout
18	Wingwall D Reinforcement
19	Pier Layout
20	Pier 1 Footing
21	Pier 2 Footing
22	Pier Segment PC-1 Layout
23	Pier Segment PC-1 Reinforcement - 1
24	Pier Segment PC-1 Reinforcement - 2
25	Pier Segment PC-1 Reinforcement - 3
26	Pier Segment PC-1 Bar List - 1
27	Pier Segment PC-1 Bar List - 2
28	Pier Segments PC-2, PC-3, PC-4, PC-5, & PC-6-2 Layout
29	Pier Segments PC-2, PC-3, PC-4, PC-5, & PC-6-2 Reinforcement
30	Pier Segments PC-2, PC-3, PC-4, PC-5, & PC-6-2 Bar List - 1
31	Pier Segments PC-2, PC-3, PC-4, PC-5, & PC-6-2 Bar List - 2
32	Pier Segments PC-2, PC-3, PC-4, PC-5, & PC-6-2 Bar List - 3
33	Pier Segments PC-2, PC-3, PC-4, PC-5, & PC-6-2 Bar List - 4
34	Pier Segments PC-2, PC-3, PC-4, PC-5, & PC-6-2 Bar List - 5
35	Pier Segments PC-2, PC-3, PC-4, PC-5, & PC-6-2 Bar List - 6
36	Pier Segment PC-6-1 Layout
37	Pier Segment PC-6-1 Reinforcement
38	Pier Segment PC-6-1 Bar List - 1
39	Pier Segment PC-6-1 Bar List - 2
40	Pier Segment PC-7 Layout
41	Pier Segment PC-7 Reinforcement - 1
42	Pier Segment PC-7 Reinforcement - 2
43	Pier Segment PC-7 Bar List - 1
44	Pier Segment PC-7 Bar List - 2
45	Pier Segment PC-8 Layout
46	Pier Segment PC-8 Reinforcement
47	Pier Segment PC-8 Bar List
48	Pier Miscellaneous Details - 1
49	Pier Miscellaneous Details - 2
50	Typical Section
51	Segment Layout
52	Top of Deck Elevations - 1
53	Top of Deck Elevations - 2
54	Joint Coordinates
55	Abutment Segment Dimensions
56	Segment A1 Reinforcement - 1
57	Segment A1 Reinforcement - 2
58	Segment A1 Reinforcement - 3
59	Segment A1 Bar List
60	Segment A1-1U Reinforcement
61	Segment A1-1U Bar List
62	Segment A1-2U Reinforcement
63	Segment A1-2U Bar List
64	Segment 1-13D Reinforcement
65	Segment 1-13D Bar List
66	Segment 1-12D Reinforcement
67	Segment 1-12D Bar List
68	Segment 1-11D Reinforcement
69	Segment 1-11D Bar List - 1
70	Segment 1-11D Bar List - 2
71	Segment 1-10D Reinforcement
72	Segment 1-10D Bar List
73	Segment 1-9D Reinforcement
74	Segment 1-9D Bar List
75	Segment 1-8D Reinforcement
76	Segment 1-8D Bar List
77	Segment 1-7D Reinforcement
78	Segment 1-7D Bar List
79	Segment 1-6D Reinforcement
80	Segment 1-6D Bar List
81	Segment 1-5D Reinforcement
82	Segment 1-5D Bar List
83	Segment 1-4D Reinforcement
84	Segment 1-4D Bar List
85	Segment 1-3D Reinforcement
86	Segment 1-3D Bar List
87	Segment 1-2D Reinforcement
88	Segment 1-2D Bar List
89	Segment 1-1D Reinforcement
90	Segment 1-1D Bar List
91	Pier Segment Dimensions
92	Segment P1-1 Reinforcement - 1
93	Segment P1-1 Reinforcement - 2
94	Segment P1-1 Bar List
95	Segment P1-2 Reinforcement - 1
96	Segment P1-2 Reinforcement - 2
97	Segment P1-2 Bar List
98	Segment 1-1U Reinforcement
99	Segment 1-1U Bar List
100	Segment 1-2U Reinforcement
101	Segment 1-2U Bar List
102	Segment 1-3U Reinforcement
103	Segment 1-3U Bar List
104	Segment 1-4U Reinforcement
105	Segment 1-4U Bar List
106	Segment 1-5U Reinforcement
107	Segment 1-5U Bar List
108	Segment 1-6U Reinforcement
109	Segment 1-6U Bar List
110	Segment 1-7U Reinforcement
111	Segment 1-7U Bar List
112	Segment 1-8U Reinforcement
113	Segment 1-8U Bar List
114	Segment 1-9U Reinforcement
115	Segment 1-9U Bar List
116	Segment 1-10U Reinforcement
117	Segment 1-10U Bar List
118	Segment 1-11U Reinforcement
119	Segment 1-11U Bar List
120	Segment 1-12U Reinforcement
121	Segment 1-12U Bar List
122	Segment 1-13U Reinforcement
123	Segment 1-13U Bar List
124	Segment 2-13D Reinforcement
125	Segment 2-13D Bar List
126	Segment 2-12D Reinforcement
127	Segment 2-12D Bar List
128	Segment 2-11D Reinforcement
129	Segment 2-11D Bar List
130	Segment 2-10D Reinforcement
131	Segment 2-10D Bar List
132	Segment 2-9D Reinforcement
133	Segment 2-9D Bar List
134	Segment 2-8D Reinforcement
135	Segment 2-8D Bar List
136	Segment 2-7D Reinforcement
137	Segment 2-7D Bar List
138	Segment 2-6D Reinforcement
139	Segment 2-6D Bar List
140	Segment 2-5D Reinforcement
141	Segment 2-5D Bar List
142	Segment 2-4D Reinforcement
143	Segment 2-4D Bar List
144	Segment 2-3D Reinforcement
145	Segment 2-3D Bar List
146	Segment 2-2D Reinforcement
147	Segment 2-2D Bar List
148	Segment 2-1D Reinforcement
149	Segment 2-1D Bar List
150	Segment P2-1 Reinforcement - 1
151	Segment P2-1 Reinforcement - 2
152	Segment P2-1 Bar List
153	Segment P2-2 Reinforcement - 1
154	Segment P2-2 Reinforcement - 2
155	Segment P2-2 Bar List
156	Segment 2-1U Reinforcement
157	Segment 2-1U Bar List
158	Segment 2-2U Reinforcement
159	Segment 2-2U Bar List
160	Segment 2-3U Reinforcement
161	Segment 2-3U Bar List
162	Segment 2-4U Reinforcement
163	Segment 2-4U Bar List
164	Segment 2-5U Reinforcement
165	Segment 2-5U Bar List
166	Segment 2-6U Reinforcement
167	Segment 2-6U Bar List
168	Segment 2-7U Reinforcement
169	Segment 2-7U Bar List
170	Segment 2-8U Reinforcement
171	Segment 2-8U Bar List
172	Segment 2-9U Reinforcement
173	Segment 2-9U Bar List
174	Segment 2-10U Reinforcement
175	Segment 2-10U Bar List
176	Segment 2-11U Reinforcement
177	Segment 2-11U Bar List - 1
178	Segment 2-11U Bar List - 2
179	Segment 2-12U Reinforcement
180	Segment 2-12U Bar List
181	Segment 2-13U Reinforcement
182	Segment 2-13U Bar List
183	Segment A2-2D Reinforcement
184	Segment A2-2D Bar List
185	Segment A2-1D Reinforcement
186	Segment A2-1D Bar List
187	Segment A2 Reinforcement - 1
188	Segment A2 Reinforcement - 2
189	Segment A2 Reinforcement - 3
190	Segment A2 Bar List
191	Closure Segments Reinforcement
192	Closure Segments Bar List
193	Bulkhead Details
194	Longitudinal Post-Tensioning Layout - 1
195	Longitudinal Post-Tensioning Layout - 2
196	Longitudinal Post-Tensioning Schedule
197	Longitudinal Tendon Curvature Details
198	External Tendon Curvature Details
199	Transverse Post-Tensioning Details
200	Type 1 Deviator
201	Type 2 Deviator
202	Bottom Slab Blister
203	Top Slab Blister
204	Erection Anchor Block Details
205	Post-Tensioning Details
206	Top Erection PT Bar Anchor Block Details
207	Bottom Erection PT Bar Anchor Block Details
208	Bottom Slab Access Opening Details
209	Abutment Access Opening Details
210	Bridge Railing - 1
211	Bridge Railing - 2
212	Bridge Railing - 3
213	Bridge Railing - 4
214	Expansion Joint Details - 1
215	Expansion Joint Details - 2
216	Bearing Details
217	Bearing Replacement Details
218	Approach Slab
219	Camber Diagram
220	Construction Sequence - 1
221	Construction Sequence - 2
222	Cantilever Construction Sequence
223	Abutment Bar List
224	Wingwall Bar List
225	Bridge Railing & Sidewalk Bar List
226	Pier Footing Bar List
227	Bearing Pedestal Bar List
228	Approach Sidewalk Bar List

U.S. DEPARTMENT OF TRANSPORTATION
FEDERAL HIGHWAY ADMINISTRATION
EASTERN FEDERAL LANDS HIGHWAY DIVISION

BLUE RIDGE PARKWAY

BRIDGE OVER I-26

LIST OF SHEETS

NO.	DATE	BY	REVISIONS	NO.	DATE	BY	REVISIONS

DESIGNED BY	DRAWN BY	CHECKED BY	SCALE	PROJECT TEAM LEADER	BRIDGE PLAN SHEET	DATE	BRP NO.
CC	CC	CWN	No Scale	George Choubah	3 of 228	December 2018	BRP-1265

ACTUAL FILE:R03_BLRI_I26_LIST OF SHEETS.DGN
M:\PROJECTS_STATE_DOT\NC\blri_I26_nepa\Bridge\Microstation\Bridge Design Files\0_PROJECTS.dgn
14-Dec-2018 12:16 PM

STATE	PROJECT	SHEET NUMBER
NC	BLRI OVER I-26	R04

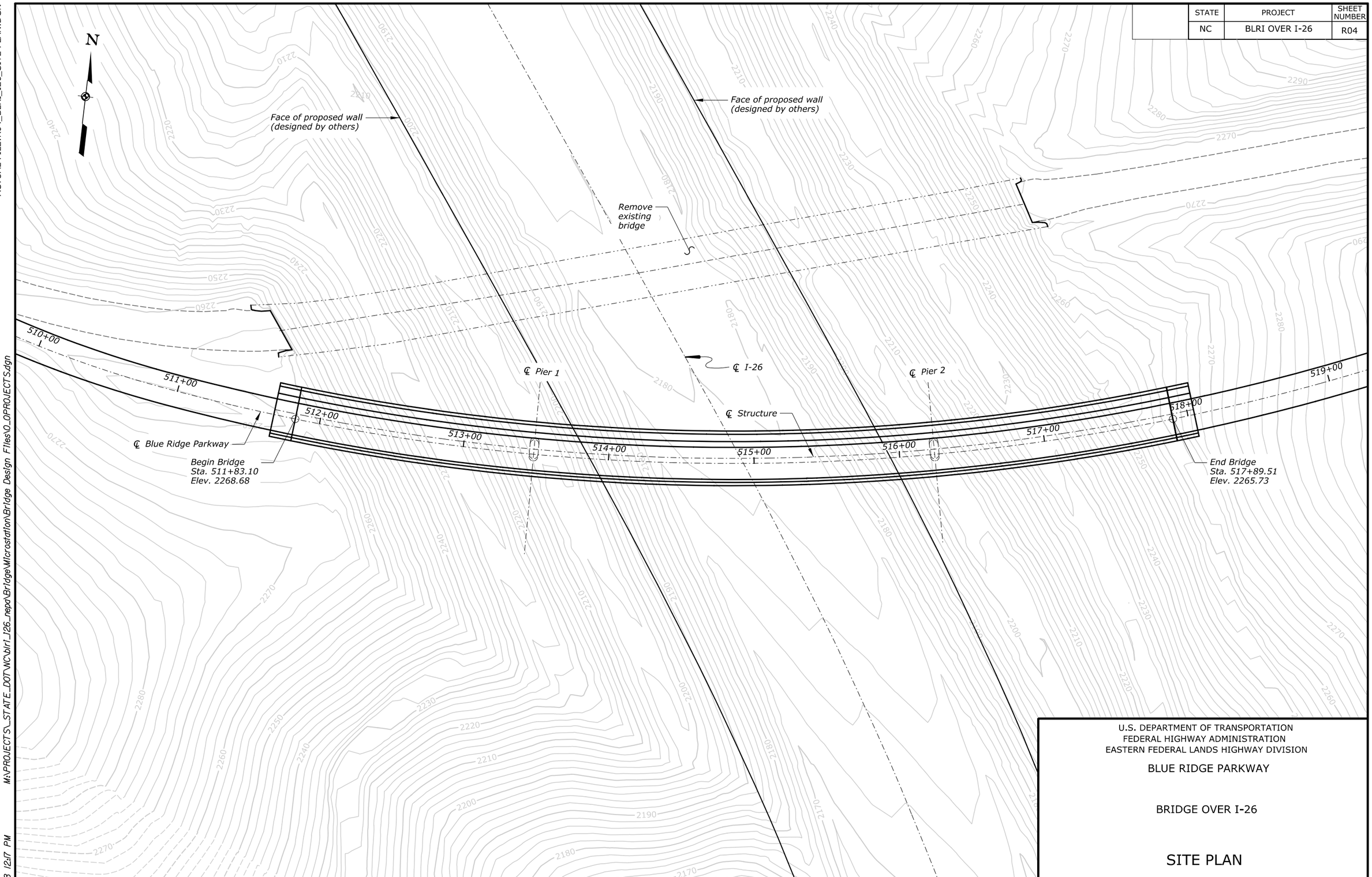

U.S. DEPARTMENT OF TRANSPORTATION
FEDERAL HIGHWAY ADMINISTRATION
EASTERN FEDERAL LANDS HIGHWAY DIVISION

BLUE RIDGE PARKWAY

BRIDGE OVER I-26

SITE PLAN

NO.	DATE	BY	REVISIONS	NO.	DATE	BY	REVISIONS

DESIGNED BY	DRAWN BY	CHECKED BY	SCALE	PROJECT TEAM LEADER	BRIDGE PLAN SHEET	DATE	BRP NO.
CC	CC	CWN	No Scale	George Choubah	4 of 228	December 2018	BRP-1265

ACTUAL FILE:R04_BLRI_I26_SITE PLAN.DGN
M:\PROJECTS_STATE_DOT\NC\blri_I26_nepa\Bridge\Microstation\Bridge Design Files\0_OPROJECTS.dgn
14-Dec-2018 12:17 PM

STATE	PROJECT	SHEET NUMBER
NC	BLRI OVER I-26	R05

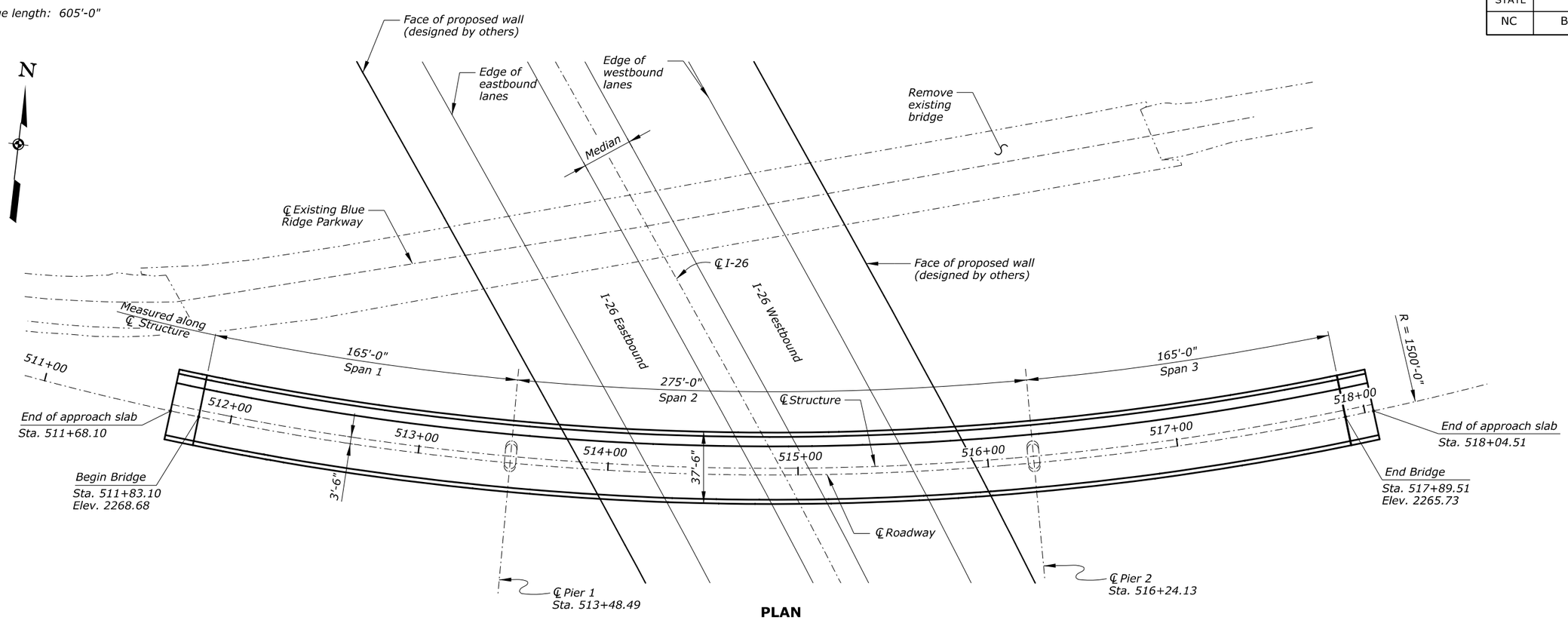

PLAN

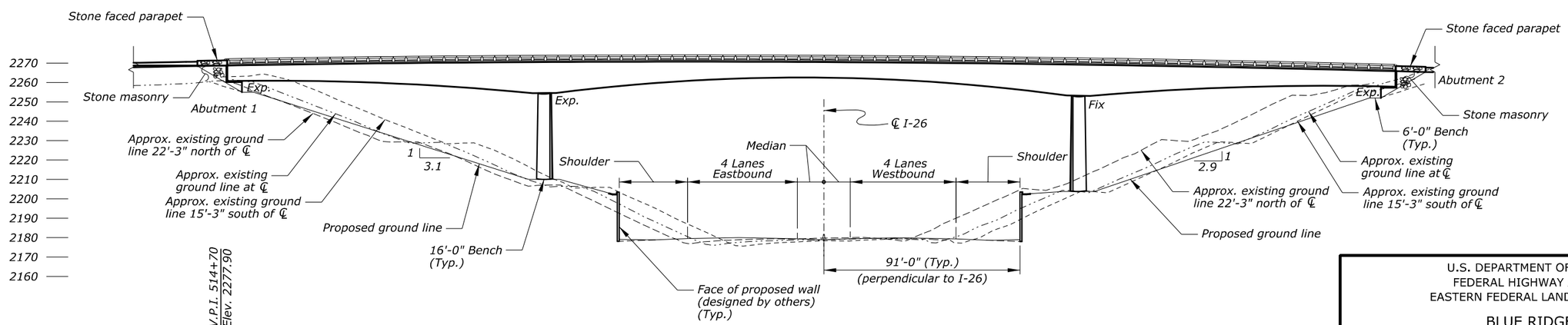

ELEVATION

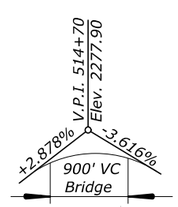

PROFILE GRADE
NO SCALE

U.S. DEPARTMENT OF TRANSPORTATION
FEDERAL HIGHWAY ADMINISTRATION
EASTERN FEDERAL LANDS HIGHWAY DIVISION

BLUE RIDGE PARKWAY

BRIDGE OVER I-26

PLAN AND ELEVATION

NO.	DATE	BY	REVISIONS	NO.	DATE	BY	REVISIONS	DESIGNED BY	DRAWN BY	CHECKED BY	SCALE	PROJECT TEAM LEADER	BRIDGE PLAN SHEET	DATE	BRP NO.
								AR	AR	CWN	1" = 30'-0"	George Choubah	5 of 228	December 2018	BRP-1265

ACTUAL FILE:R05_BLRI_I26_PE.DGN
M:\PROJECTS_STATE_DOT\NC\blri_I26_nepo\Bridge\Microstation\Bridge Design Files\0_OPROJECTS.dgn
14-Dec-2018 12:17 PM

STATE	PROJECT	SHEET NUMBER
NC	BLRI OVER I-26	R06

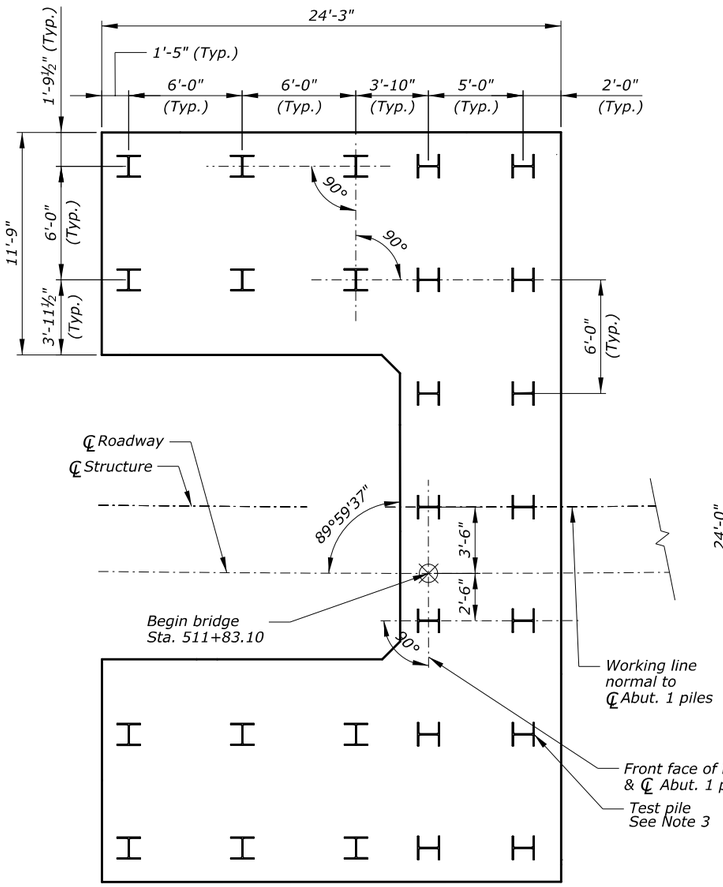

ABUTMENT 1 PLAN

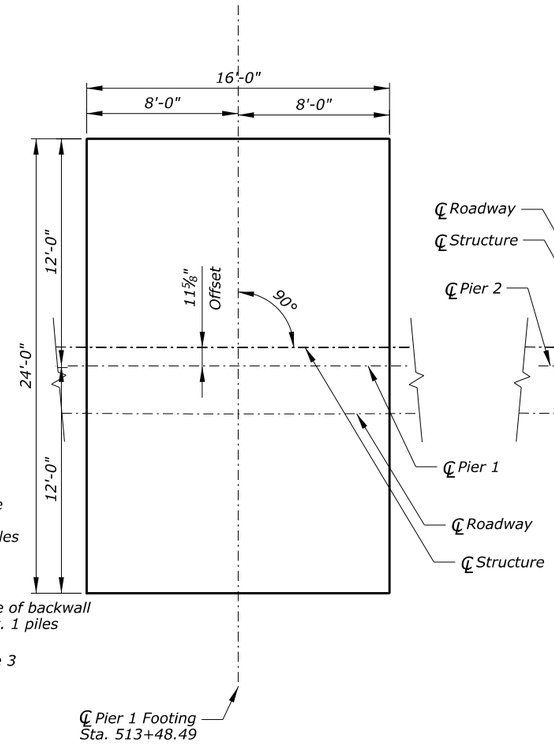

PIER 1 PLAN

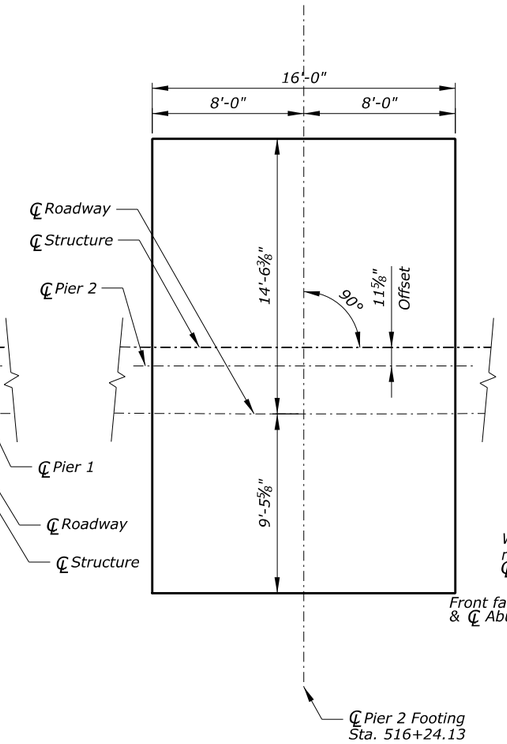

PIER 2 PLAN

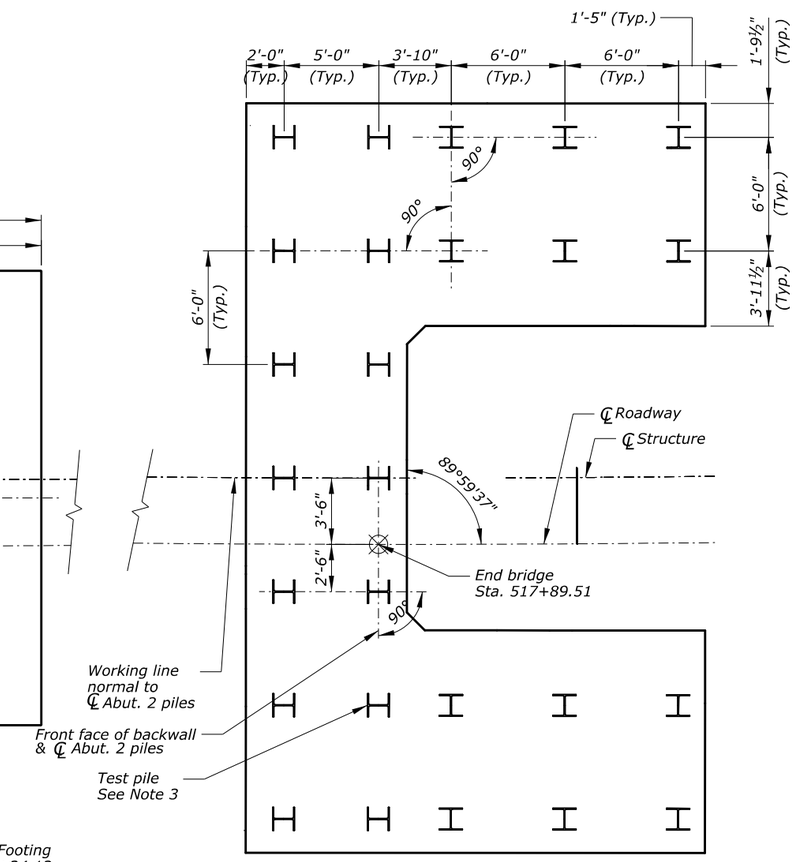

ABUTMENT 2 PLAN

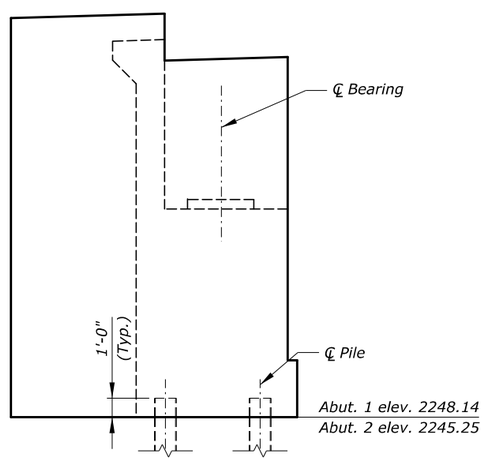

ABUTMENT ELEVATION

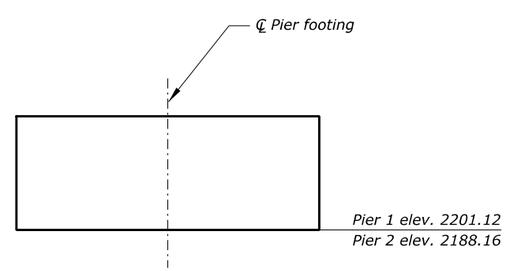

PIER FOOTING ELEVATION

PILE DATA TABLE			
LOCATION	ESTIMATED PILE TIP ELEVATION (ft)	ESTIMATED TOTAL LENGTH (ft)	FACTORED GEOTECHNICAL RESISTANCE (Kips/Pile)
ABUTMENT 1	2188.10	1587.08	349
ABUTMENT 2	2195.15	1328.60	438

Note:

1. *Pile locations are dimensioned parallel and perpendicular to working lines.*
2. *Furnish HP 14x89 steel piles.*
3. *Perform one PDA load test per abutment. Load test to be performed using production pile.*

U.S. DEPARTMENT OF TRANSPORTATION
FEDERAL HIGHWAY ADMINISTRATION
EASTERN FEDERAL LANDS HIGHWAY DIVISION

BLUE RIDGE PARKWAY

BRIDGE OVER I-26

FOUNDATION LAYOUT

NO.	DATE	BY	REVISIONS	NO.	DATE	BY	REVISIONS	DESIGNED BY	DRAWN BY	CHECKED BY	SCALE	PROJECT TEAM LEADER	BRIDGE PLAN SHEET	DATE	BRP NO.
								LE	LE	CWN	¼" = 1'-0"	George Choubah	6 of 228	December 2018	BRP-1265

ACTUAL FILE:R06_BLRI_I26_FOUNDATION LAYOUT.dgn
M:\PROJECTS_STATE_DOT\NC\blri_I26_nepa\Bridge\Microstation\Bridge Design Files\0_OPROJECTS.dgn
14-Dec-2018 12:17 PM

STATE	PROJECT	SHEET NUMBER
NC	BLRI OVER I-26	R07

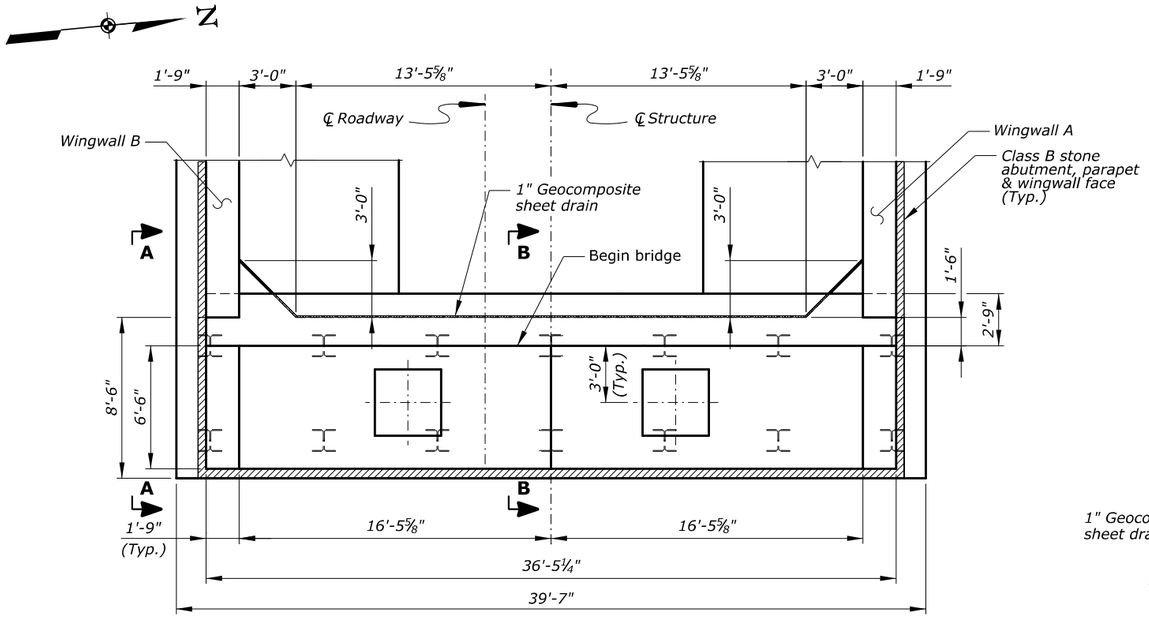

ABUTMENT 1 PLAN
Scale: ¼" = 1'-0"

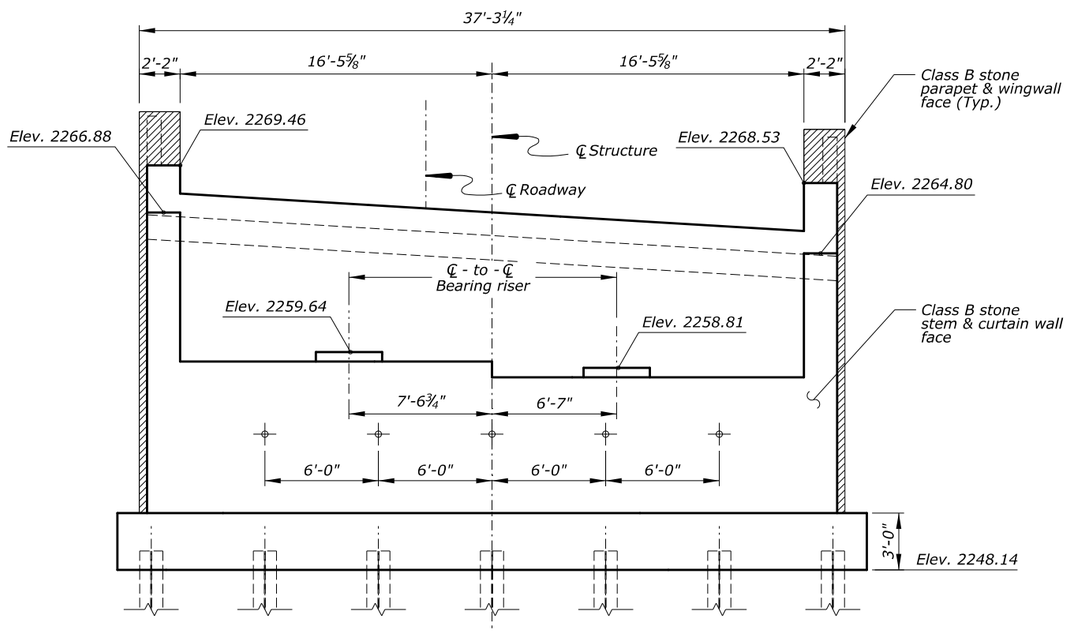

ABUTMENT 1 ELEVATION
Scale: ¼" = 1'-0"

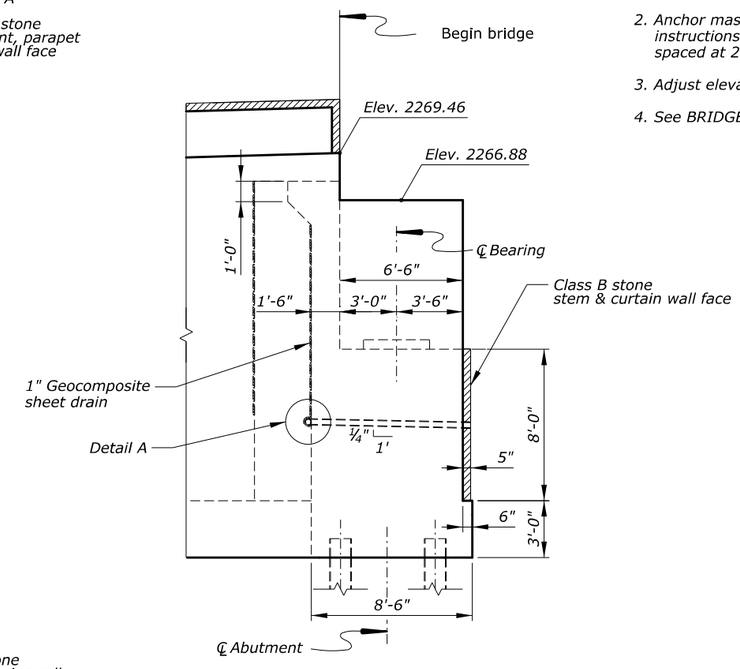

VIEW A-A
Scale: ¼" = 1'-0"

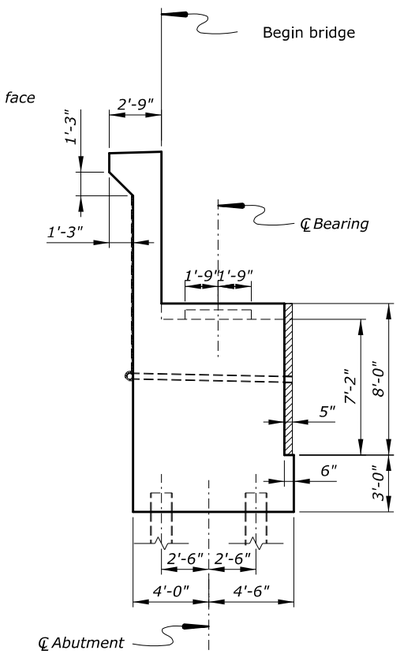

SECTION B-B
Scale: ¼" = 1'-0"

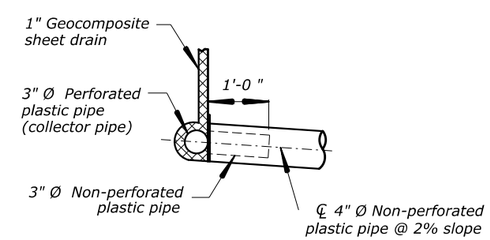

DETAIL A
Scale: 1" = 1'-0"

Notes:

1. *See "FOUNDATION LAYOUT" sheet for additional information.*
2. *Anchor masonry to concrete per anchor manufacturer's instructions utilizing stainless steel dovetail anchor and slots, spaced at 24 inch max.*
3. *Adjust elevation of weepholes to outlet 1'-0" above finish grade.*
4. *See BRIDGE RAIL and "APPROACH SLAB" sheets for additional information.*

Key:

n.f. = near face
f.f. = far face
e.f. = each face

U.S. DEPARTMENT OF TRANSPORTATION
FEDERAL HIGHWAY ADMINISTRATION
EASTERN FEDERAL LANDS HIGHWAY DIVISION

BLUE RIDGE PARKWAY

BRIDGE OVER I-26

ABUTMENT 1 LAYOUT

NO.	DATE	BY	REVISIONS	NO.	DATE	BY	REVISIONS	DESIGNED BY	DRAWN BY	CHECKED BY	SCALE	PROJECT TEAM LEADER	BRIDGE PLAN SHEET	DATE	BRP NO.
								LE	LE	CWN	As Shown	George Choubah	7 of 228	December 2018	BRP-1265

ACTUAL FILE:R07_BLRI_I26_ABUTMENT 1 LAYOUT.dgn
M:\PROJECTS_STATE_DOT\NC\blri_I26_nepa\Bridge\Microstation\Bridge Design Files\0_OPROJECTS.dgn
14-Dec-2018 12:17 PM

STATE	PROJECT	SHEET NUMBER
NC	BLRI OVER I-26	R08

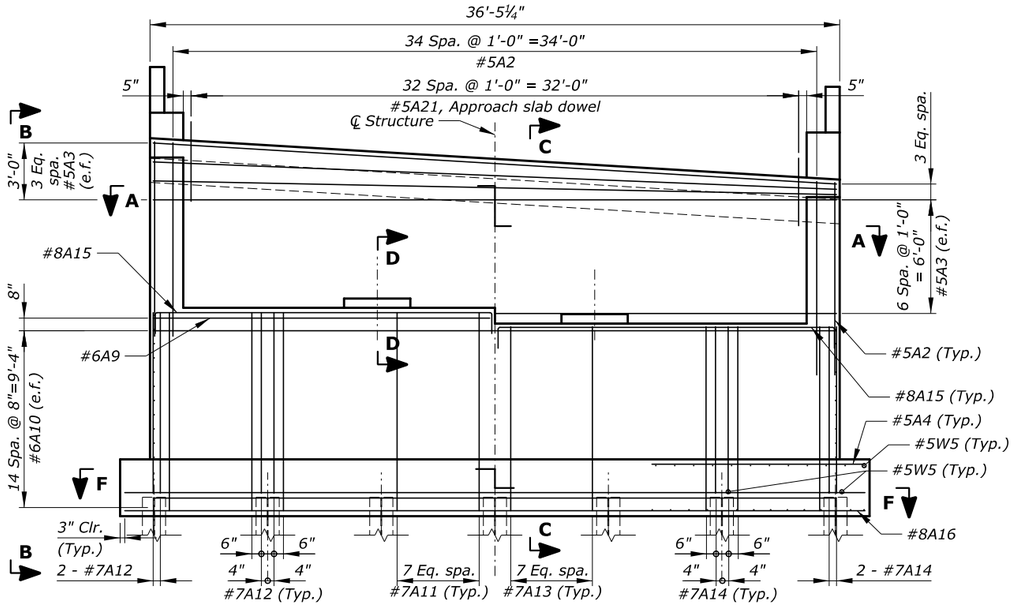

ABUTMENT 1 ELEVATION VIEW
Scale: ¼" = 1'-0"

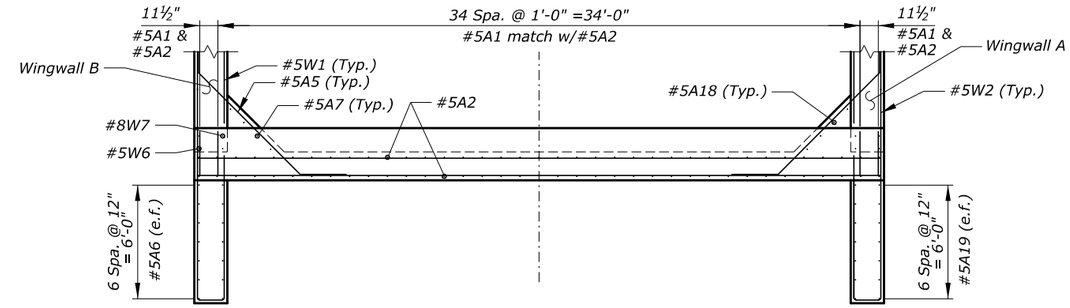

SECTION A-A
Scale: ¼" = 1'-0"

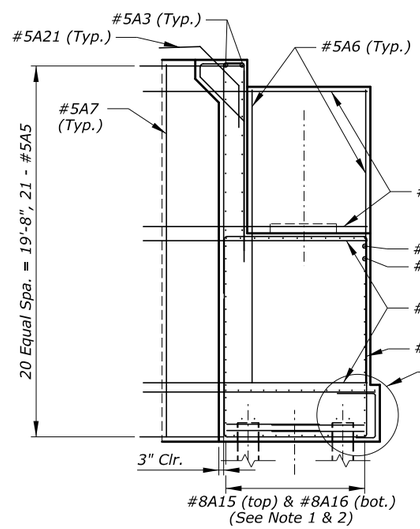

VIEW B-B
Scale: ¼" = 1'-0"

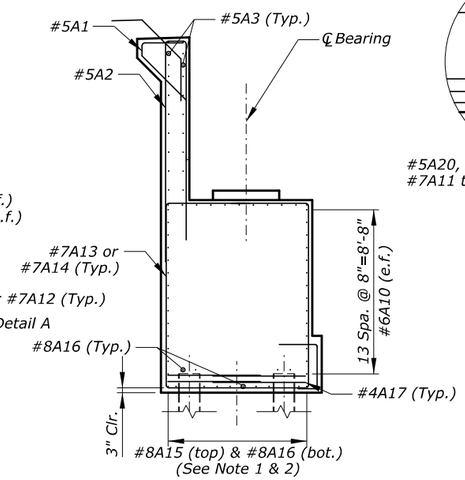

SECTION C-C
Scale: ¼" = 1'-0"

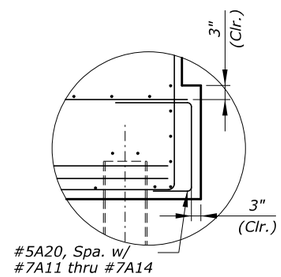

DETAIL A

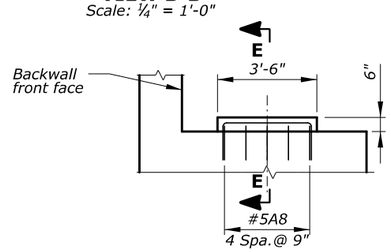

SECTION D-D
Scale: ⅜" = 1'-0"

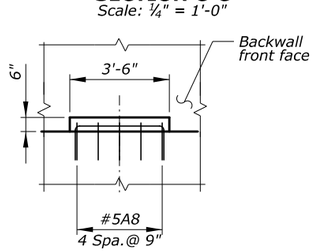

SECTION E-E
Scale: ⅜" = 1'-0"

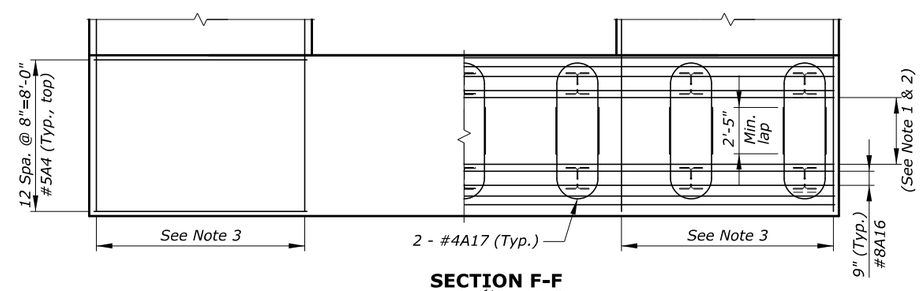

SECTION F-F
Scale: ¼" = 1'-0"

Notes:

1. *Provide 9-inch maximum spacing for top and bottom abutment stem reinforcement.*
2. *Space and cut all reinforcement to maintain 2-inch clearance around H-piles.*
3. *See "WINGWALL A REINFORCEMENT" and "WINGWALL B REINFORCEMENT" sheets for additional information.*
4. *Provide a minimum embedment of 1'-6" for #5 reinforcement. Provide a minimum lap of 2'-0" for #5 reinforcement.*

Key:
n.f. = near face
f.f. = far face
e.f. = each face

U.S. DEPARTMENT OF TRANSPORTATION
FEDERAL HIGHWAY ADMINISTRATION
EASTERN FEDERAL LANDS HIGHWAY DIVISION

BLUE RIDGE PARKWAY

BRIDGE OVER I-26

ABUTMENT 1 REINFORCEMENT

NO.	DATE	BY	REVISIONS	NO.	DATE	BY	REVISIONS	DESIGNED BY	DRAWN BY	CHECKED BY	SCALE	PROJECT TEAM LEADER	BRIDGE PLAN SHEET	DATE	BRP NO.
								LE	LE	CWN	As Shown	George Choubah	8 of 228	December 2018	BRP-1265

ACTUAL FILE:R08_BLRI_I26_ABUTMENT 1 REINFORCEMENT.dgn
M:\PROJECTS_STATE_DOT\NC\blri_I26_nepo\BridgeWlcrostation\Bridge Design Files\0_OPROJECTS.dgn
14-Dec-2018 12:17 PM

STATE	PROJECT	SHEET NUMBER
NC	BLRI OVER I-26	R09

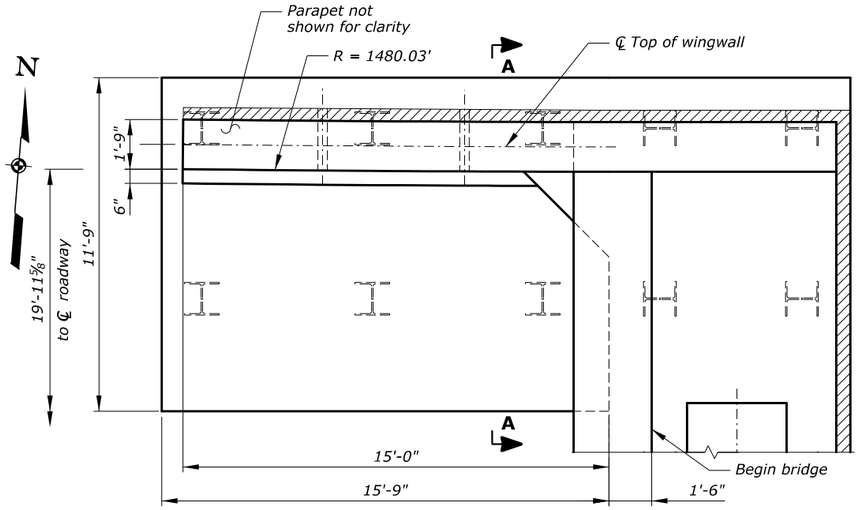

WINGWALL A PLAN

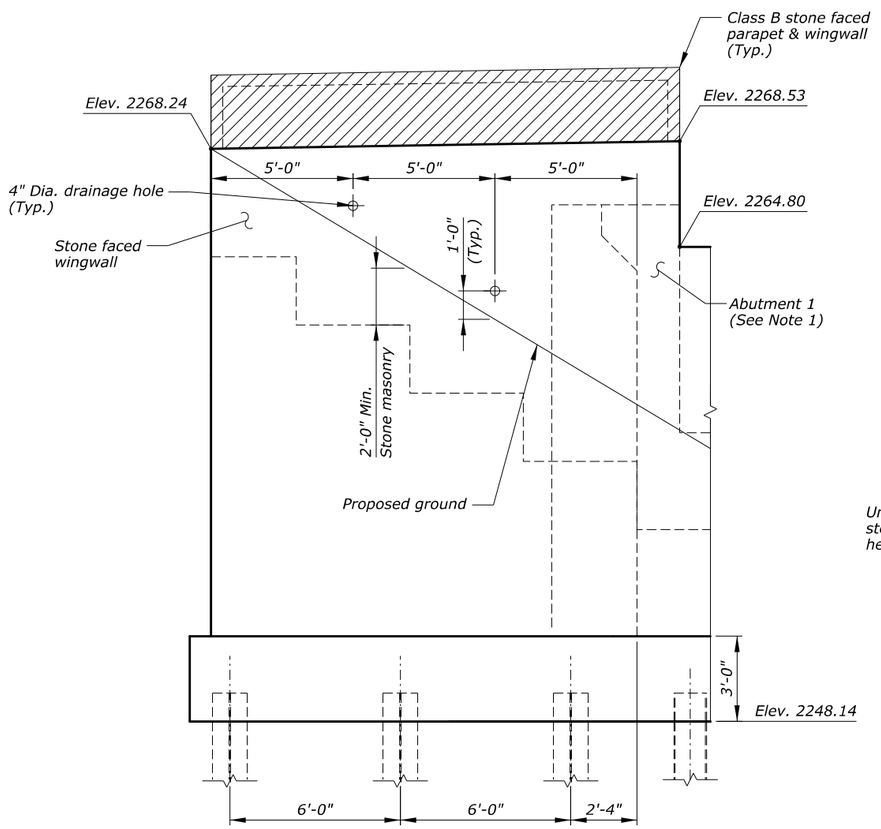

WINGWALL A ELEVATION

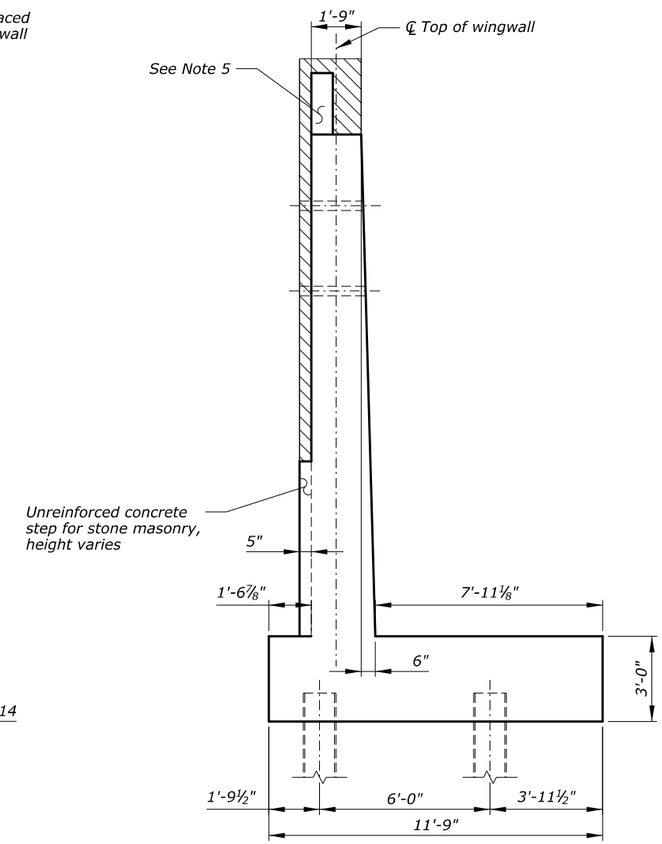

SECTION A-A

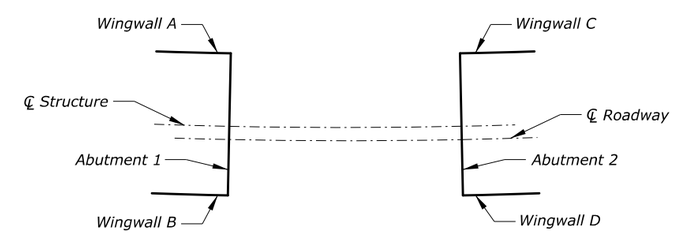

Notes:

1. *See "ABUTMENT 1 REINFORCEMENT" and "ABUTMENT 1 LAYOUT" sheets for additional information.*
2. *See "WINGWALL A REINFORCEMENT" sheet for additional information.*
3. *See "FOUNDATION LAYOUT" sheet for additional information.*
4. *Anchor masonry to concrete per anchor manufacturer's instructions untilizing stainless steel dovetail anchor and slots, spaced at 24 inch max.*
5. *See "WINGWALL B LAYOUT" sheet for stone masonry details.*
6. *Adjust elevation of weepholes to outlet 1-ft above finish grade.*
7. *See BRIDGE RAIL sheets and "APPROACH SLAB" sheet for additional information.*

Key:
n.f. = near face
f.f. = far face
e.f. = each face

U.S. DEPARTMENT OF TRANSPORTATION
FEDERAL HIGHWAY ADMINISTRATION
EASTERN FEDERAL LANDS HIGHWAY DIVISION

BLUE RIDGE PARKWAY

BRIDGE OVER I-26

WINGWALL A LAYOUT

NO.	DATE	BY	REVISIONS	NO.	DATE	BY	REVISIONS	DESIGNED BY	DRAWN BY	CHECKED BY	SCALE	PROJECT TEAM LEADER	BRIDGE PLAN SHEET	DATE	BRP NO.
								LE	LE	CWN	⅜" = 1'-0"	George Choubah	9 of 228	December 2018	BRP-1265

ACTUAL FILE:R09_BLRI_I26_WINGWALL LAYOUT A.dgn
M:\PROJECTS_STATE_DOT\NC\blri_I26_nepo\Bridge\Microstation\Bridge Design Files\0_0PROJECTS.dgn
14-Dec-2018 12:17 PM

STATE	PROJECT	SHEET NUMBER
NC	BLRI OVER I-26	R10

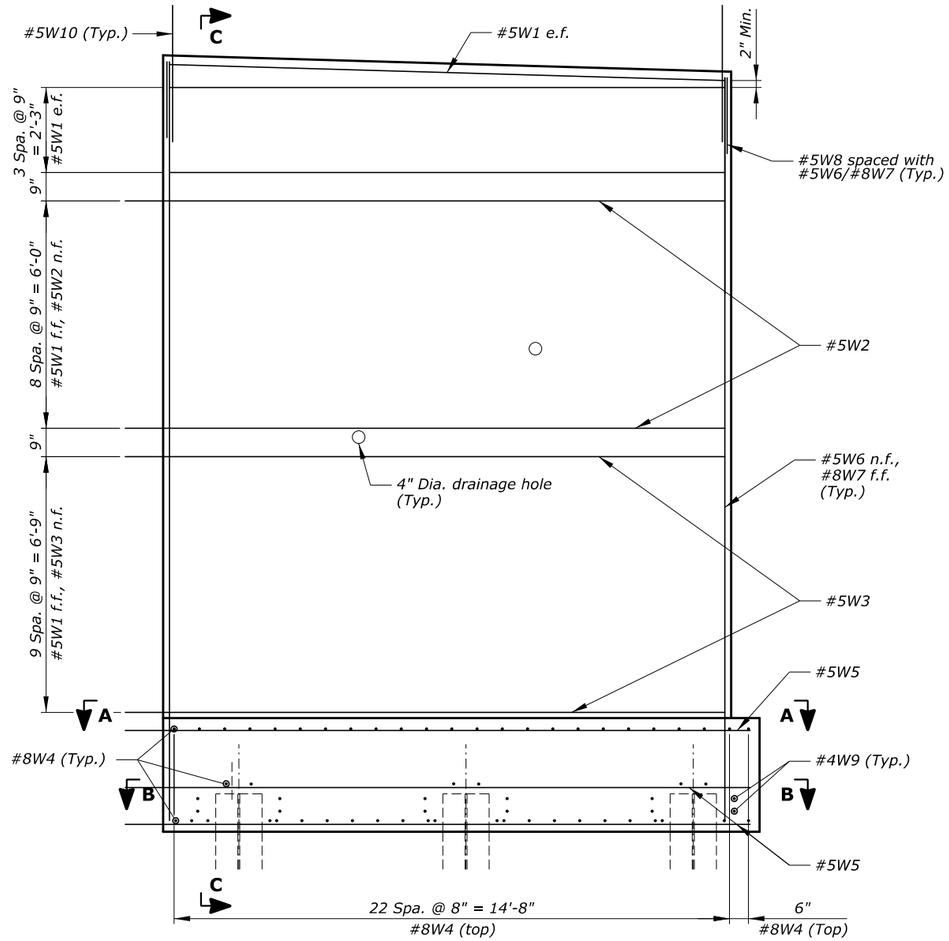

WINGWALL A ELEVATION VIEW

Notes:

1. Space and cut all reinforcement to maintain 2-inch clearance around H-piles and adjacent reinforcement. Maximum spacing of 8 inches.
2. See "WINGWALL A LAYOUT" sheet for additional information.
3. See "WINGWALL C REINFORCEMENT" sheet for additional information.
4. Provide a minimum of 2'-0" lap splices for #5 bars.

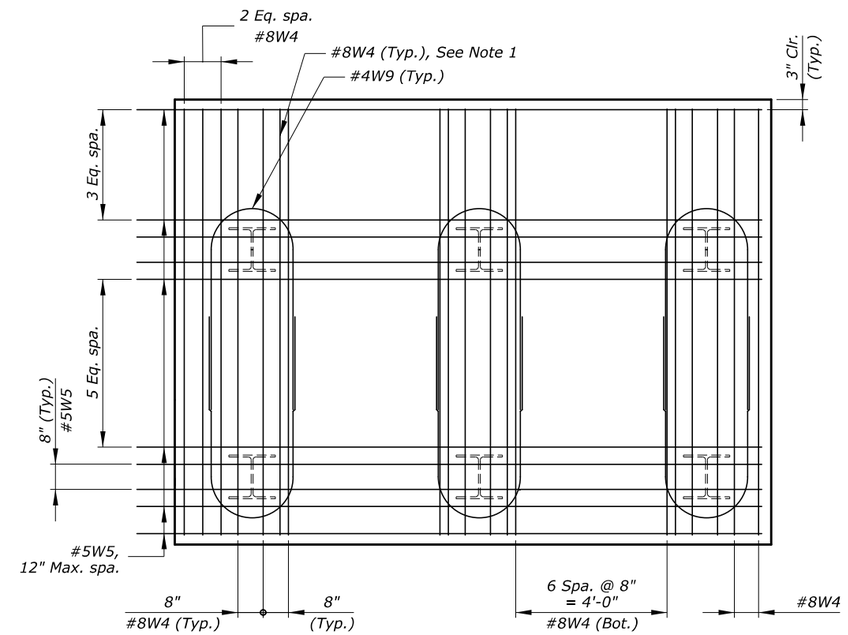

SECTION B-B WINGWALL FOOTING

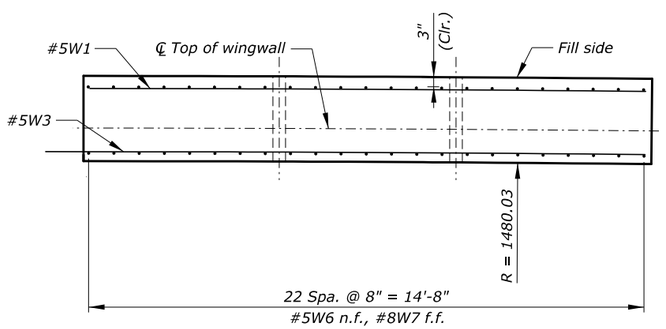

SECTION A-A

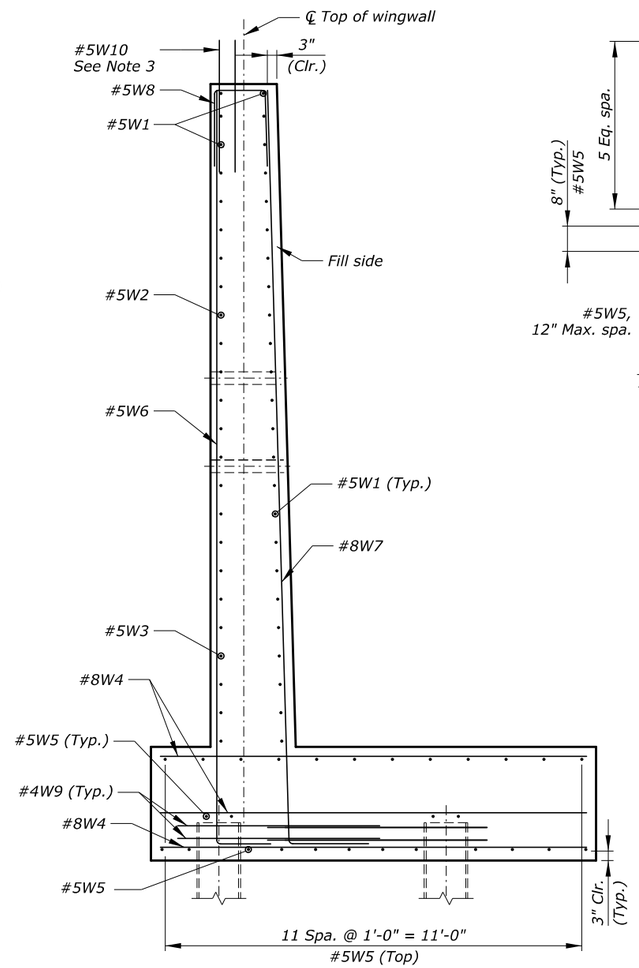

SECTION C-C

Key:
n.f. = near face
f.f. = far face
e.f. = each face

U.S. DEPARTMENT OF TRANSPORTATION
FEDERAL HIGHWAY ADMINISTRATION
EASTERN FEDERAL LANDS HIGHWAY DIVISION

BLUE RIDGE PARKWAY

BRIDGE OVER I-26

WINGWALL A REINFORCEMENT

NO.	DATE	BY	REVISIONS	NO.	DATE	BY	REVISIONS	DESIGNED BY	DRAWN BY	CHECKED BY	SCALE	PROJECT TEAM LEADER	BRIDGE PLAN SHEET	DATE	BRP NO.
								LE	LE	CWN	½" = 1'-0"	George Choubah	10 of 228	December 2018	BRP-1265

ACTUAL FILE:R10_BLRI_I26_WINGWALL A REINFORCEMENT.dgn
M:\PROJECTS_STATE_DOT\NC\blri_I26_nepa\Bridge\Microstation\Bridge Design Files\0_OPROJECTS.dgn
14-Dec-2018 12:17 PM

STATE	PROJECT	SHEET NUMBER
NC	BLRI OVER I-26	R11

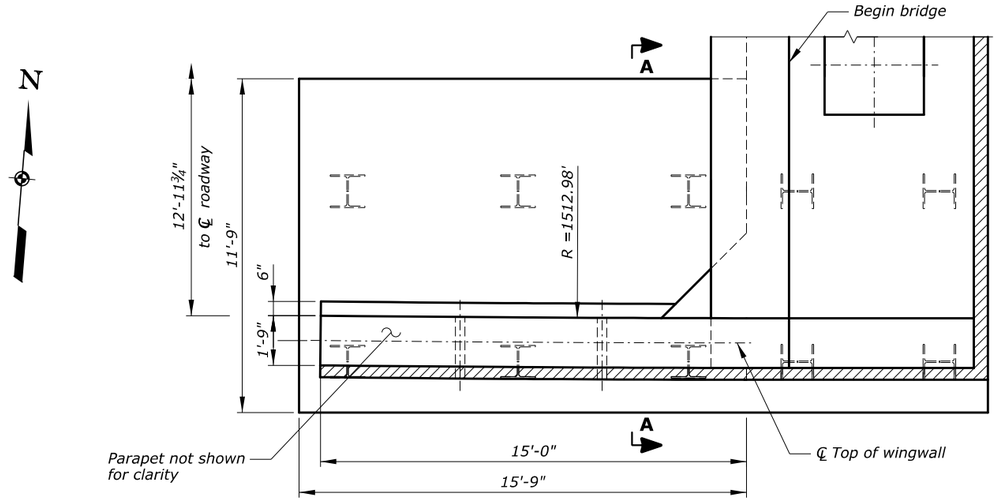

WINGWALL B PLAN
Scale: ⅜" = 1'-0"

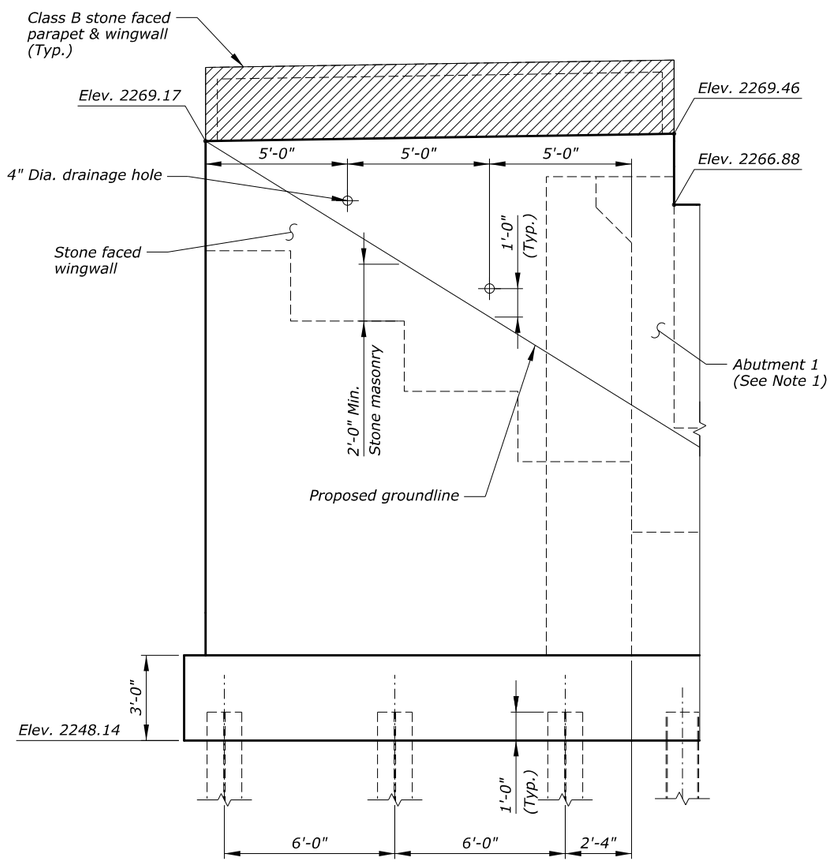

WINGWALL B ELEVATION
Scale: ⅜" = 1'-0"

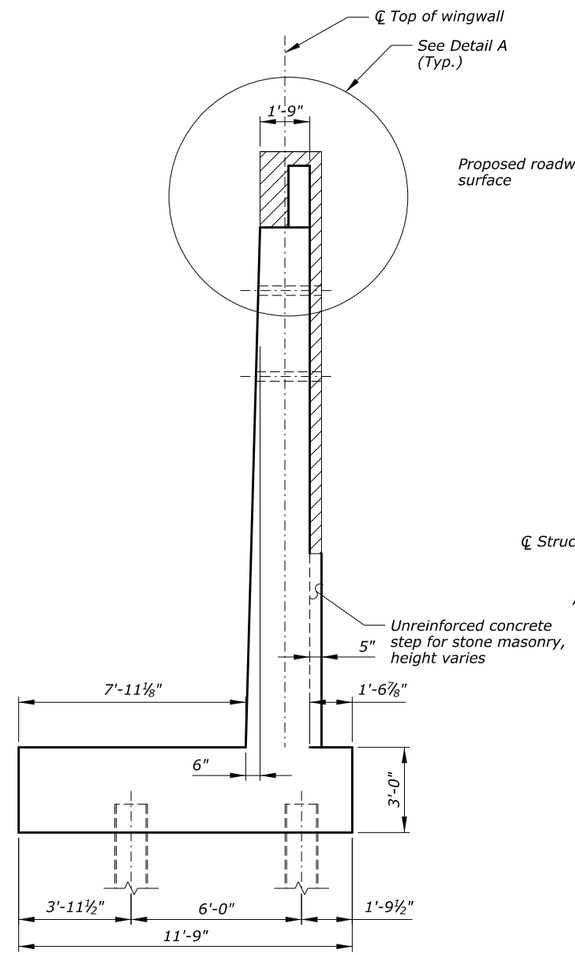

SECTION A-A
Scale: ⅜" = 1'-0"

Notes:

1. See "ABUTMENT 1 REINFORCEMENT" and "ABUTMENT 1 LAYOUT" sheets for additional information.
2. See "FOUNDATION LAYOUT" sheet for additional information.
3. Anchor masonry to concrete per anchor manufacturer's instructions untilizing stainless steel dovetail anchor and slots, spaced at 24 inch max.
4. Adjust elevation of weepholes to outlet 1-ft above finish grade.
5. See BRIDGE RAIL and "APPROACH SLAB" sheets for additional information.
6. See "WINGWALL B REINFORCEMENT" sheet for additional information.

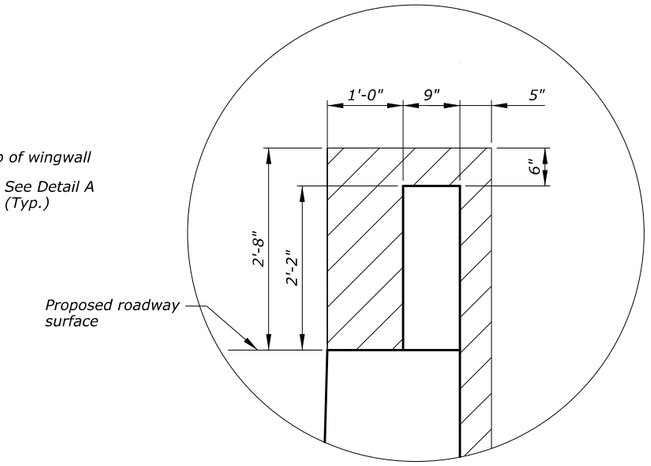

DETAIL A
Scale: 1" = 1'-0"

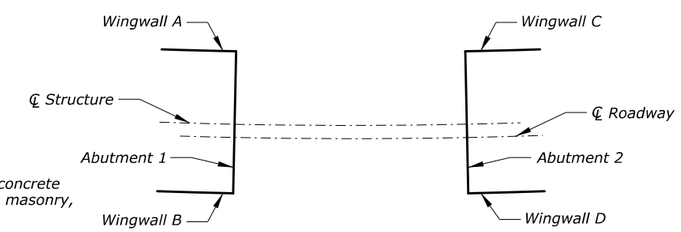

Key:
n.f. = near face
f.f. = far face
e.f. = each face

U.S. DEPARTMENT OF TRANSPORTATION
FEDERAL HIGHWAY ADMINISTRATION
EASTERN FEDERAL LANDS HIGHWAY DIVISION

BLUE RIDGE PARKWAY

BRIDGE OVER I-26

WINGWALL B LAYOUT

NO.	DATE	BY	REVISIONS	NO.	DATE	BY	REVISIONS

DESIGNED BY	DRAWN BY	CHECKED BY	SCALE	PROJECT TEAM LEADER	BRIDGE PLAN SHEET	DATE	BRP NO.
LE	LE	CWN	As Shown	George Choubah	11 of 228	December 2018	BRP-1265

ACTUAL FILE:R11_BLRI_I26_WINGWALL LAYOUT B.dgn
M:\PROJECTS_STATE_DOT\NC\blri_I26_nepa\Bridge\Microstation\Bridge Design Files\0_0PROJECTS.dgn
14-Dec-2018 12:17 PM

STATE	PROJECT	SHEET NUMBER
NC	BLRI OVER I-26	R12

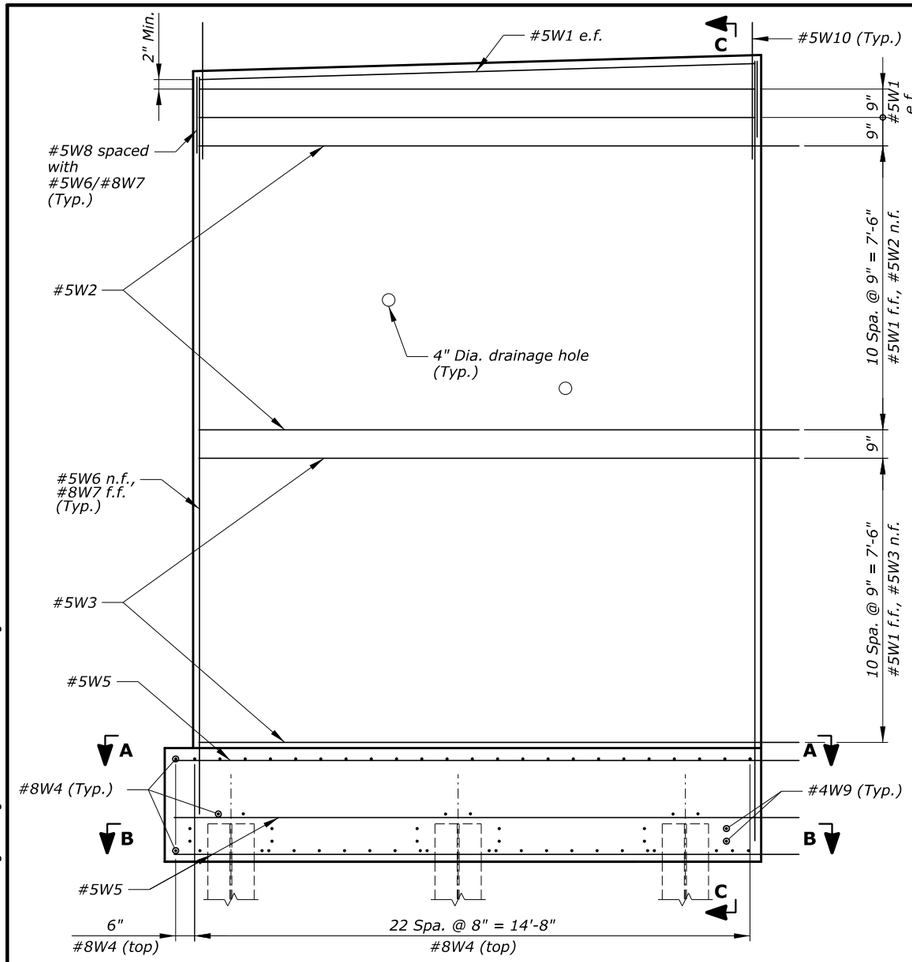

WINGWALL B ELEVATION VIEW

Notes:

1. Space and cut all reinforcement to maintain 2-inch clearance around H-piles and adjacent reinforcement. Maximum spacing of 8 inches.
2. See "WINGWALL B LAYOUT" sheet for additional information.
3. See "WINGWALL C REINFORCEMENT" sheet for additional information.
4. Provide a minimum of 2'-0" lap splices for #5 bars.

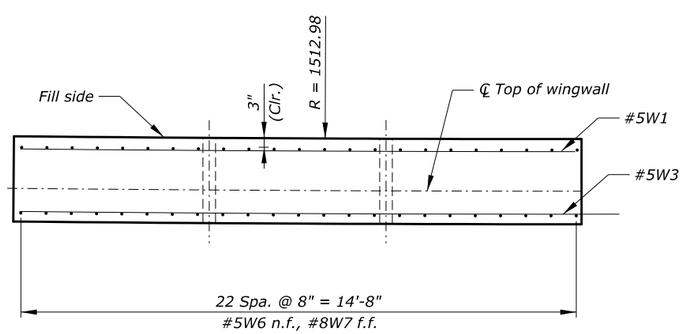

SECTION A-A

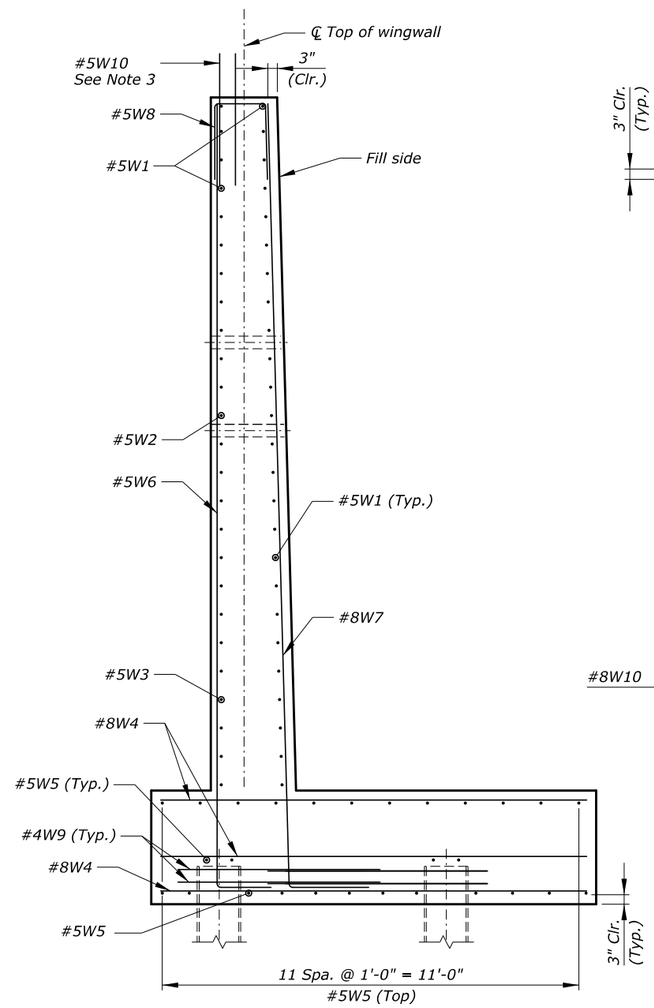

SECTION C-C

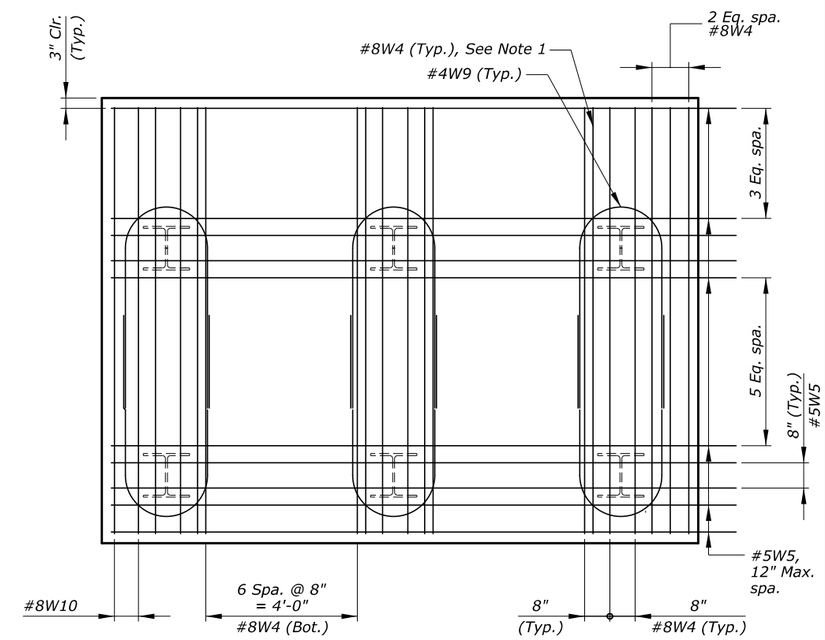

SECTION B-B WINGWALL FOOTING

Key:

n.f. = near face
f.f. = far face
e.f. = each face

U.S. DEPARTMENT OF TRANSPORTATION
FEDERAL HIGHWAY ADMINISTRATION
EASTERN FEDERAL LANDS HIGHWAY DIVISION

BLUE RIDGE PARKWAY

BRIDGE OVER I-26

WINGWALL B REINFORCEMENT

NO.	DATE	BY	REVISIONS	NO.	DATE	BY	REVISIONS	DESIGNED BY	DRAWN BY	CHECKED BY	SCALE	PROJECT TEAM LEADER	BRIDGE PLAN SHEET	DATE	BRP NO.
								LE	LE	CWN	½" = 1'-0"	George Choubah	12 of 228	December 2018	BRP-1265

ACTUAL FILE:R12_BLRI_I26_WINGWALL B REINFORCEMENT.dgn
M:\PROJECTS_STATE_DOT\WC\blr1_I26_nepa\Bridge\Microstation\Bridge Design Files\0_OPROJECTS.dgn
14-Dec-2018 12:17 PM

STATE	PROJECT	SHEET NUMBER
NC	BLRI OVER I-26	R13

Note:

1. See "FOUNDATION LAYOUT" sheet for additional information.
2. Anchor masonry to concrete per anchor manufacturer's instructions utilizing stainless steel dovetail anchor and slots, spaced at 24 inch max.
3. Adjust elevation of weepholes to outlet 1'-0" above finish grade.
4. See BRIDGE RAIL and "APPROACH SLAB" sheets for additional information.
5. See "ABUTMENT 1 LAYOUT" sheet for additional information.

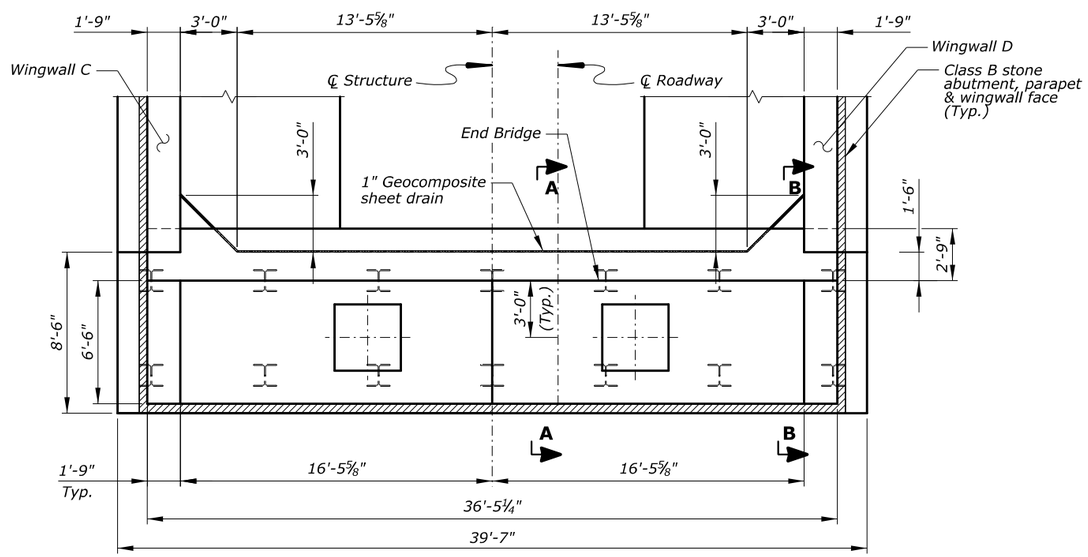

ABUTMENT 2 PLAN

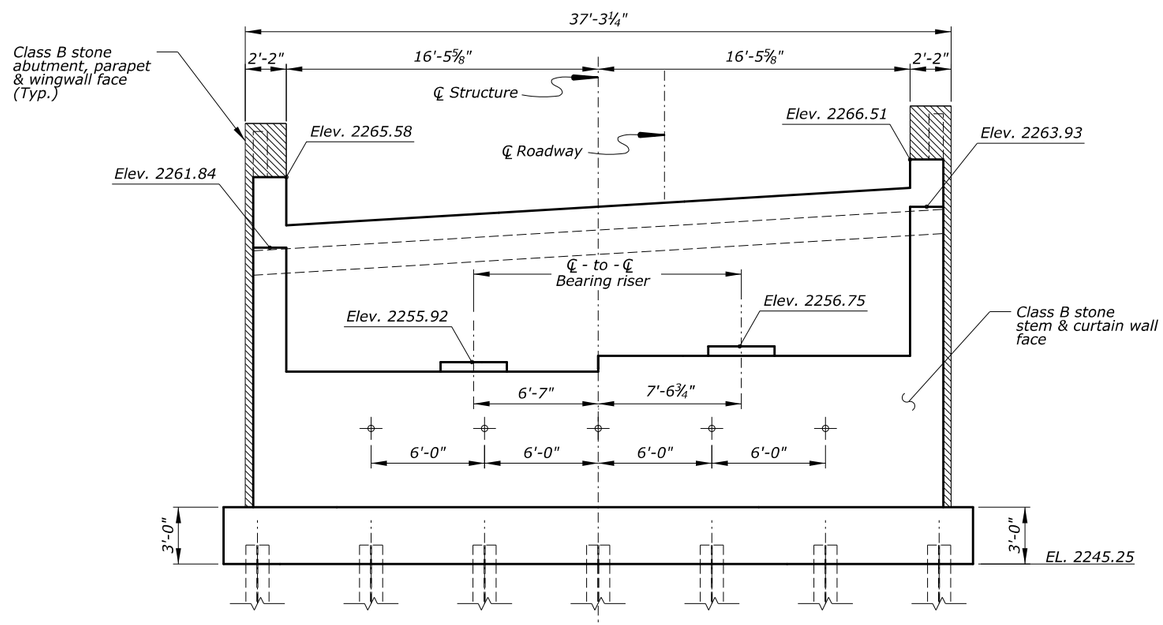

ABUTMENT 2 ELEVATION

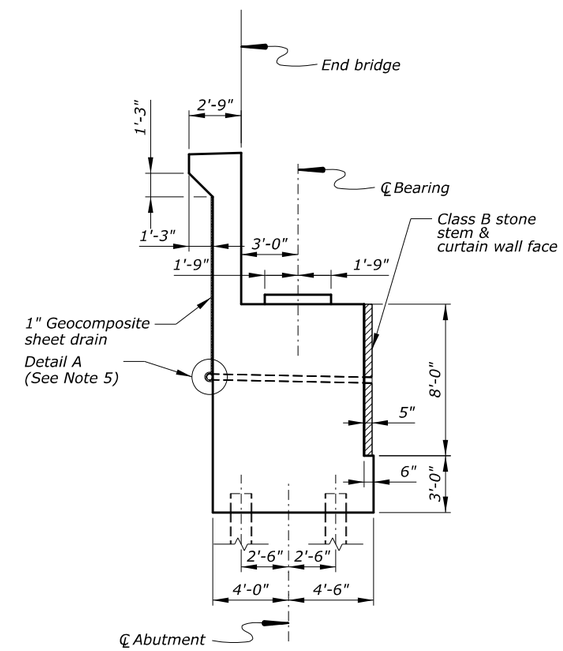

SECTION A-A

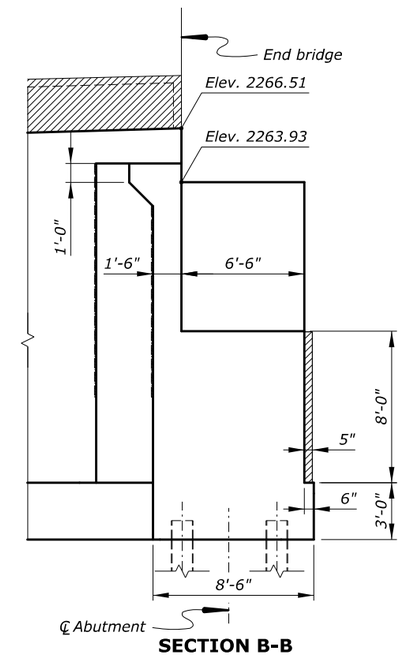

SECTION B-B

Key:

n.f. = near face
f.f. = far face
e.f. = each face

U.S. DEPARTMENT OF TRANSPORTATION
FEDERAL HIGHWAY ADMINISTRATION
EASTERN FEDERAL LANDS HIGHWAY DIVISION

BLUE RIDGE PARKWAY

BRIDGE OVER I-26

ABUTMENT 2 LAYOUT

NO.	DATE	BY	REVISIONS	NO.	DATE	BY	REVISIONS	DESIGNED BY	DRAWN BY	CHECKED BY	SCALE	PROJECT TEAM LEADER	BRIDGE PLAN SHEET	DATE	BRP NO.
								LE	LE	CWN	¼" = 1'-0"	George Choubah	13 of 228	December 2018	BRP-1265

ACTUAL FILE:R13_BLRI_I26_ABUTMENT 2 LAYOUT.DGN
M:\PROJECTS_STATE_DOT\NC\blri_I26_nepo\Bridge\Microstation\Bridge Design Files\0_OPROJECTS.dgn
14-Dec-2018 12:17 PM

STATE	PROJECT	SHEET NUMBER
NC	BLRI OVER I-26	R14

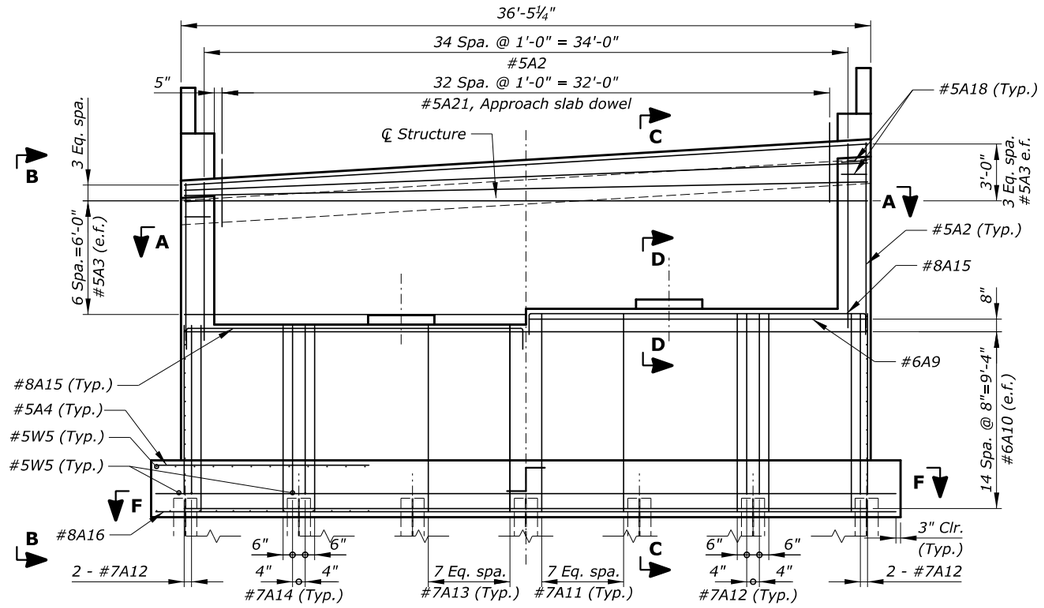

ABUTMENT 2 ELEVATION VIEW
Scale: ¼" = 1'-0"

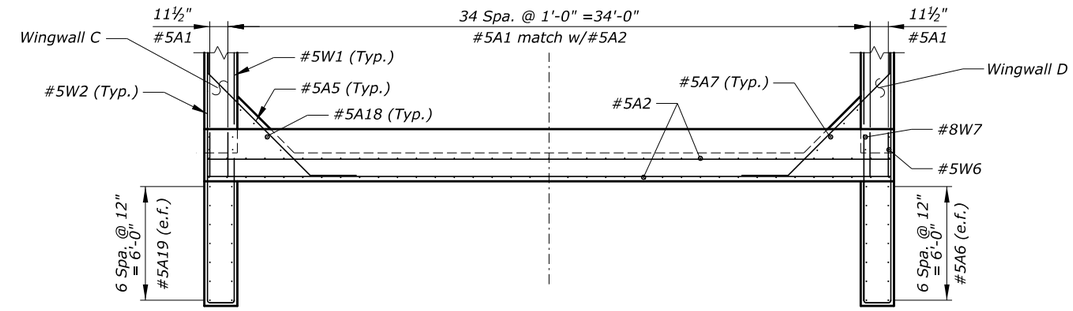

SECTION A-A
Scale: ¼" = 1'-0"

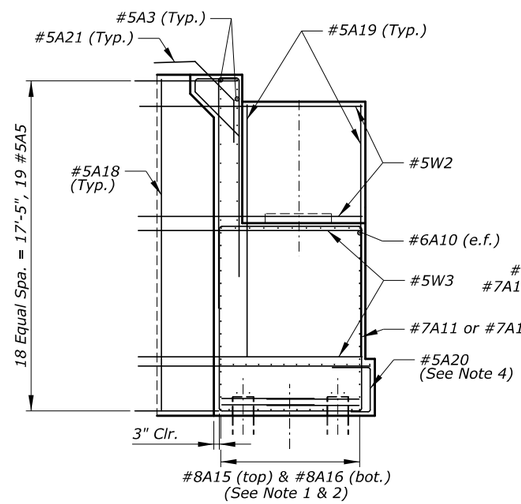

VIEW B-B
Scale: ¼" = 1'-0"

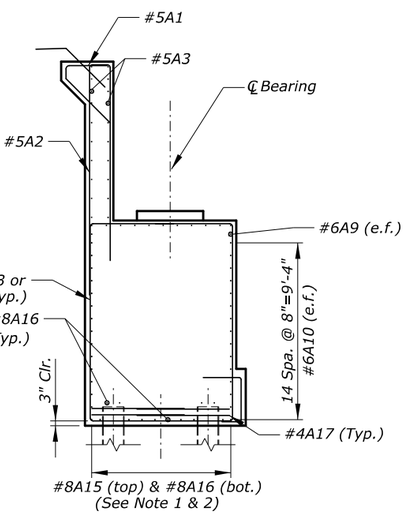

SECTION C-C
Scale: ¼" = 1'-0"

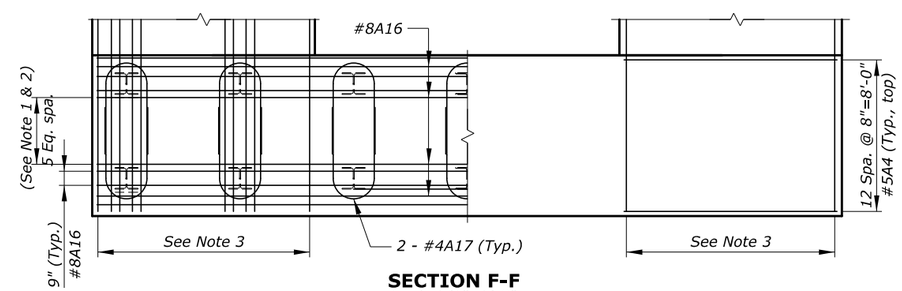

SECTION F-F
Scale 1/4"=1'-0"

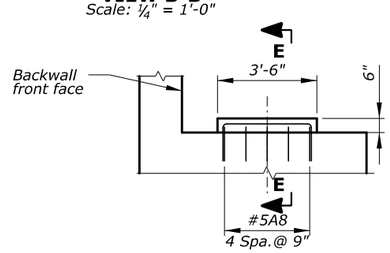

SECTION D-D
Scale: ⅜" = 1'-0"

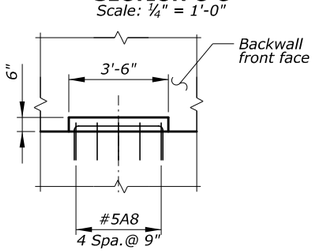

SECTION E-E
Scale: ⅜" = 1'-0"

Notes:

1. *Provide 9 inch maximum spacing for top and bottom abutment stem reinforcement.*
2. *Space and cut all reinforcement to maintain 2 inch clearance around H-piles.*
3. *See "WINGWALL C REINFORCEMENT" and "WINGWALL D REINFORCEMENT" sheets for additional information.*
4. *See "ABUTMENT 1 REINFORCEMENT" sheet for additional information.*
5. *Provide a minimum embedment of 1'-6" for #5 reinforcement. Provide a minimum lap of 2'-0" for #5 reinforcement.*

Key:
n.f. = near face
f.f. = far face
e.f. = each face

U.S. DEPARTMENT OF TRANSPORTATION
FEDERAL HIGHWAY ADMINISTRATION
EASTERN FEDERAL LANDS HIGHWAY DIVISION

BLUE RIDGE PARKWAY

BRIDGE OVER I-26

ABUTMENT 2 REINFORCEMENT

NO.	DATE	BY	REVISIONS	NO.	DATE	BY	REVISIONS	DESIGNED BY	DRAWN BY	CHECKED BY	SCALE	PROJECT TEAM LEADER	BRIDGE PLAN SHEET	DATE	BRP NO.
								LE	LE	CWN	As Shown	George Choubah	14 of 228	December 2018	BRP-1265

ACTUAL FILE:R14_BLRI_I26_ABUTMENT 2 REINFORCEMENT.dgn
M:\PROJECTS_STATE_DOT\NC\blri_I26_nepa\Bridge\Microstation\Bridge Design Files\0_OPROJECTS.dgn
14-Dec-2018 12:17 PM

STATE	PROJECT	SHEET NUMBER
NC	BLRI OVER I-26	R15

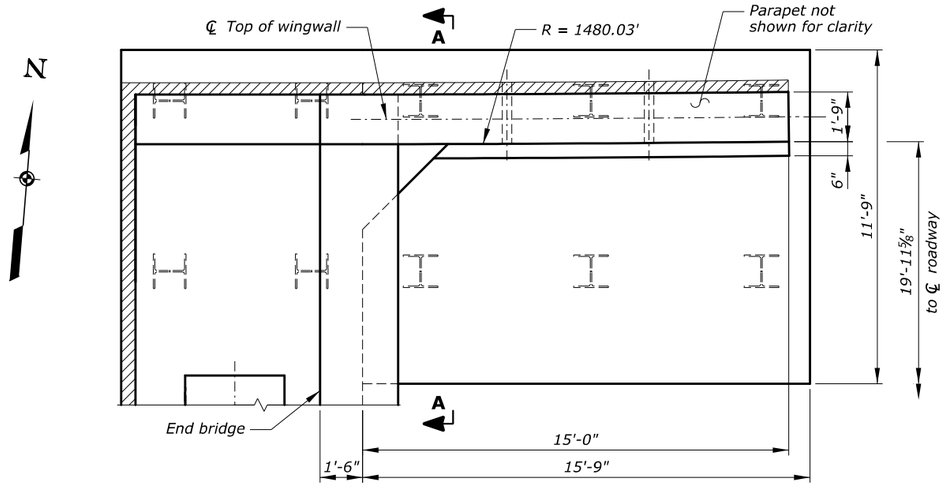

WINGWALL C PLAN

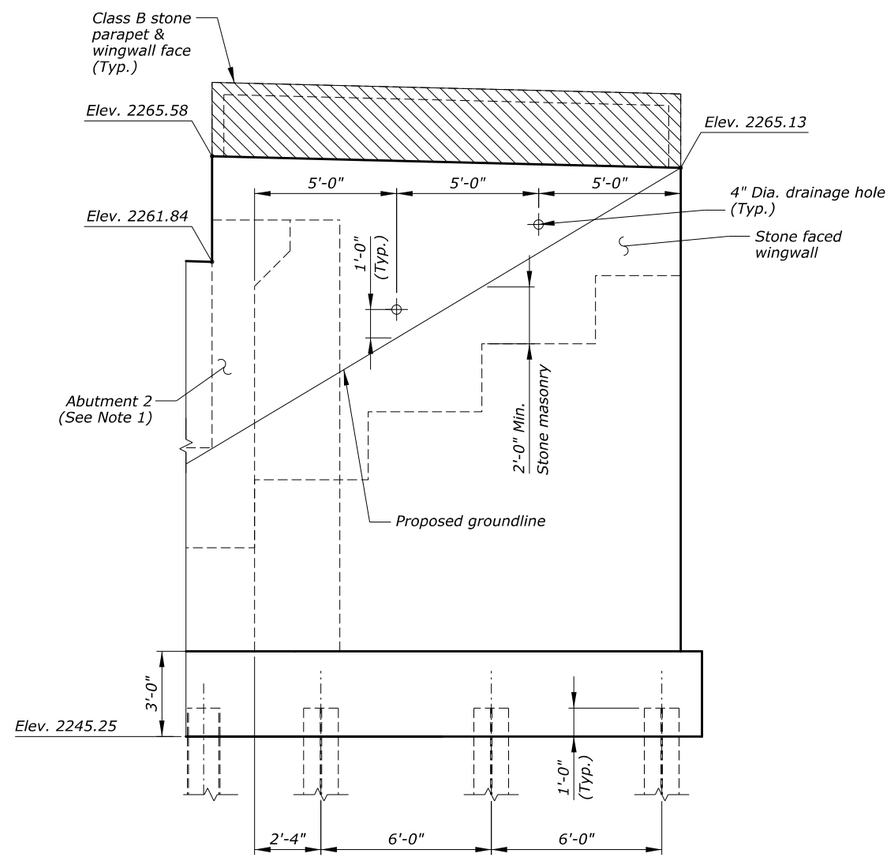

WINGWALL C ELEVATION

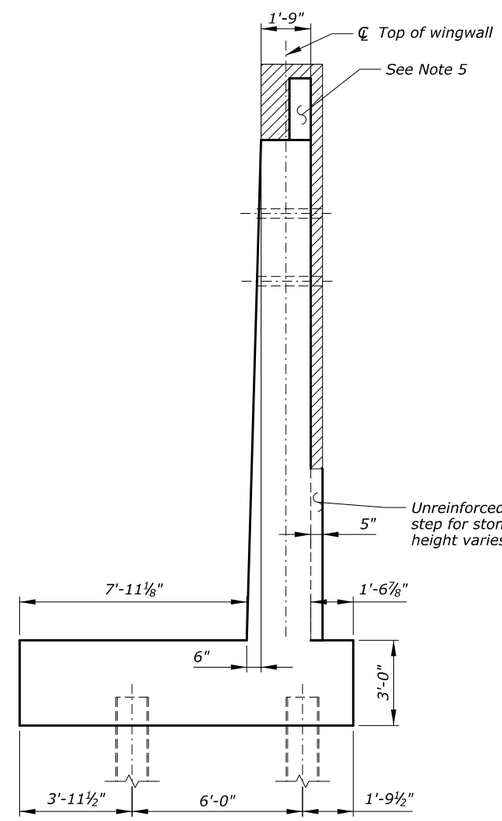

SECTION A-A

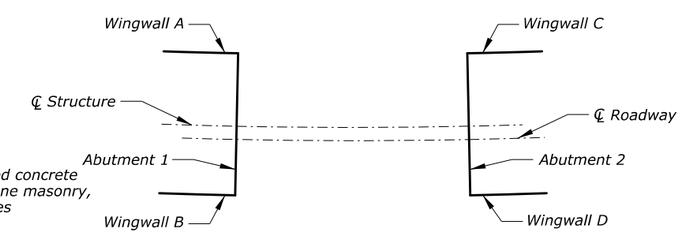

Notes:

1. *See "ABUTMENT 2 REINFORCEMENT" and "ABUTMENT 2 LAYOUT" sheets for additional information.*
2. *See "WINGWALL C REINFORCEMENT" sheet for additional information.*
3. *See "FOUNDATION LAYOUT" sheet for additional information.*
4. *Anchor masonry to concrete per anchor manufacturer's instructions utilizing stainless steel dovetail anchor and slots, spaced at 24 inch max.*
5. *See "WINGWALL B LAYOUT" sheet for stone masonry details.*
6. *Adjust elevation of weepholes to outlet 1-ft above finish grade.*
7. *See BRIDGE RAIL and "APPROACH SLAB" sheets for additional information.*

Key:

n.f. = near face
f.f. = far face
e.f. = each face

U.S. DEPARTMENT OF TRANSPORTATION
FEDERAL HIGHWAY ADMINISTRATION
EASTERN FEDERAL LANDS HIGHWAY DIVISION

BLUE RIDGE PARKWAY

BRIDGE OVER I-26

WINGWALL C LAYOUT

NO.	DATE	BY	REVISIONS	NO.	DATE	BY	REVISIONS

DESIGNED BY	DRAWN BY	CHECKED BY	SCALE	PROJECT TEAM LEADER	BRIDGE PLAN SHEET	DATE	BRP NO.
LE	LE	CWN	⅜" = 1'-0"	George Choubah	15 of 228	December 2018	BRP-1265

ACTUAL FILE:R15_BLRI_I26_WINGWALL LAYOUT C.dgn
M:\PROJECTS_STATE_DOT\WC\blri_I26_nepa\Bridge\Microstation\Bridge Design Files\0_OPROJECTS.dgn
14-Dec-2018 12:17 PM

STATE	PROJECT	SHEET NUMBER
NC	BLRI OVER I-26	R16

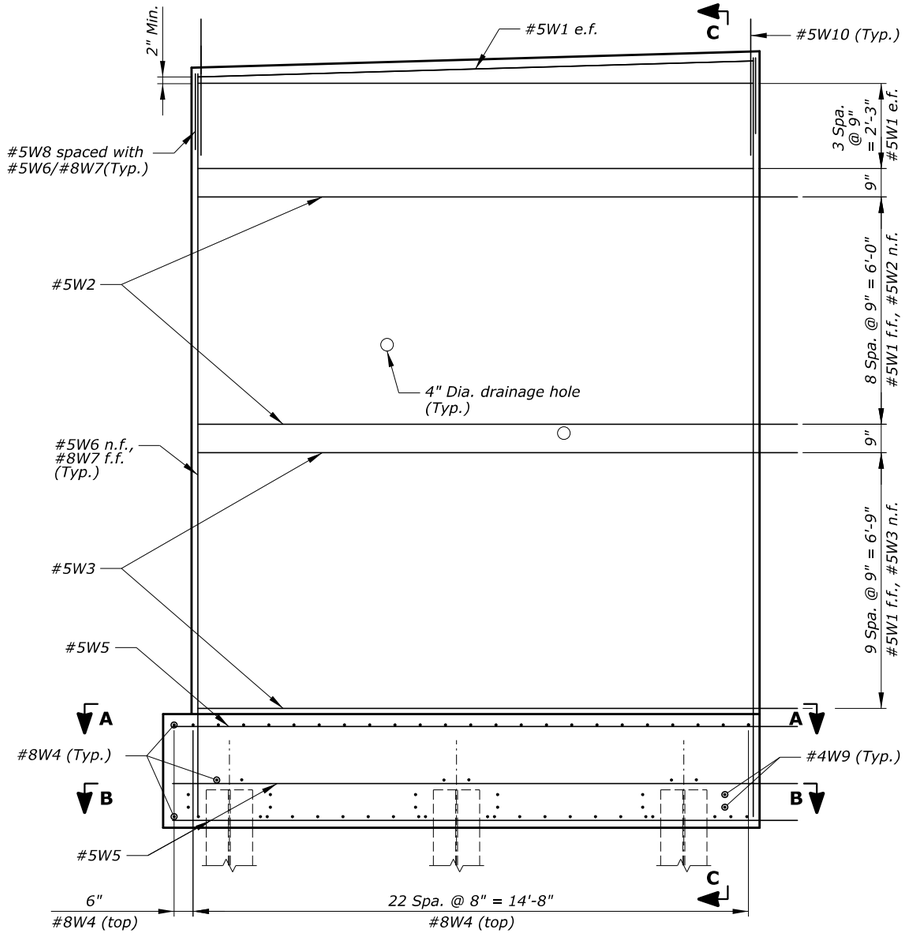

WINGWALL C ELEVATION VIEW
Scale: ½" = 1'-0"

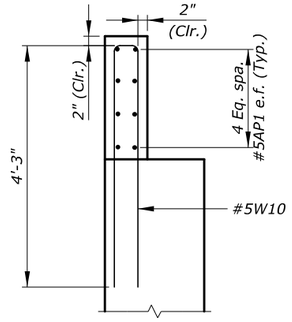

PARAPET ELEVATION VIEW
Scale: ¾" = 1'-0"

Notes:

1. Space and cut all reinforcement to maintain 2-inch clearance around H-piles and adjacent reinforcement. Maximum spacing of 8 inches.
2. See "WINGWALL C LAYOUT" sheet for additional information.
3. Provide a minimum of 2'-0" lap splices for #5 bars.

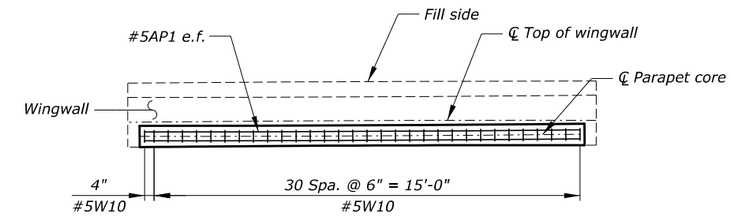

PARAPET PLAN VIEW
Scale: ⅜" = 1'-0"

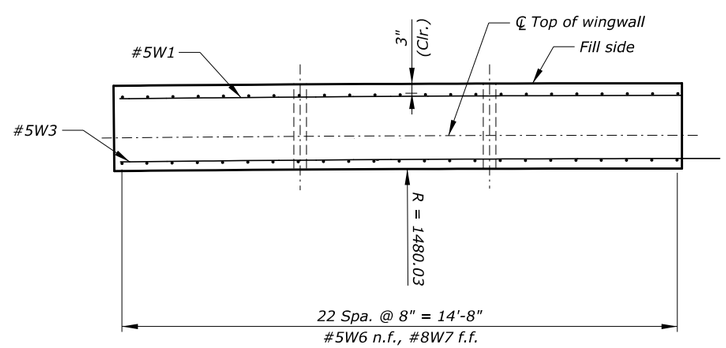

SECTION A-A
Scale: ½" = 1'-0"

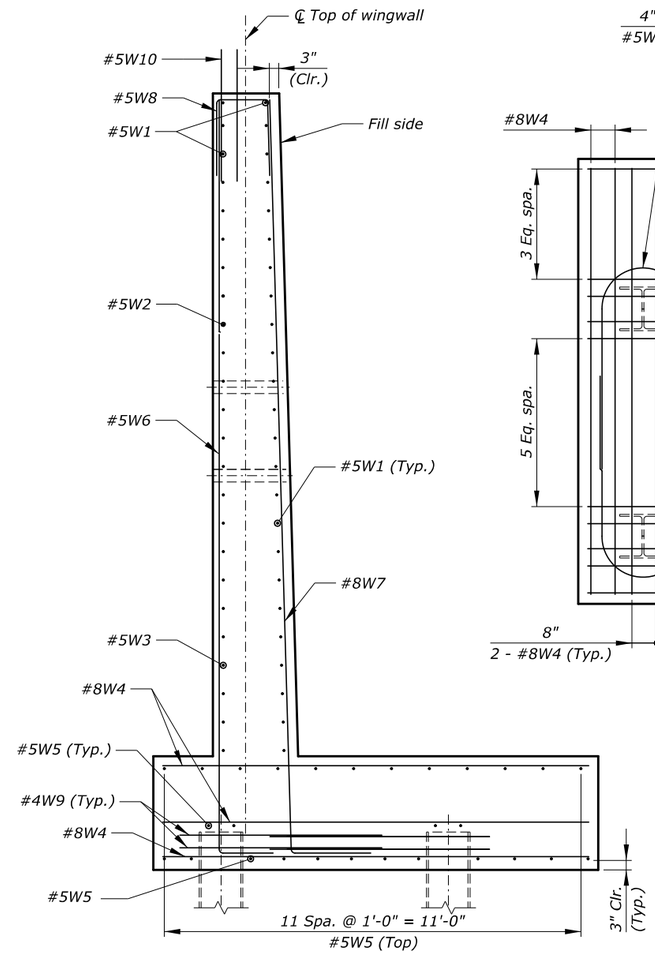

SECTION C-C
Scale: ½" = 1'-0"

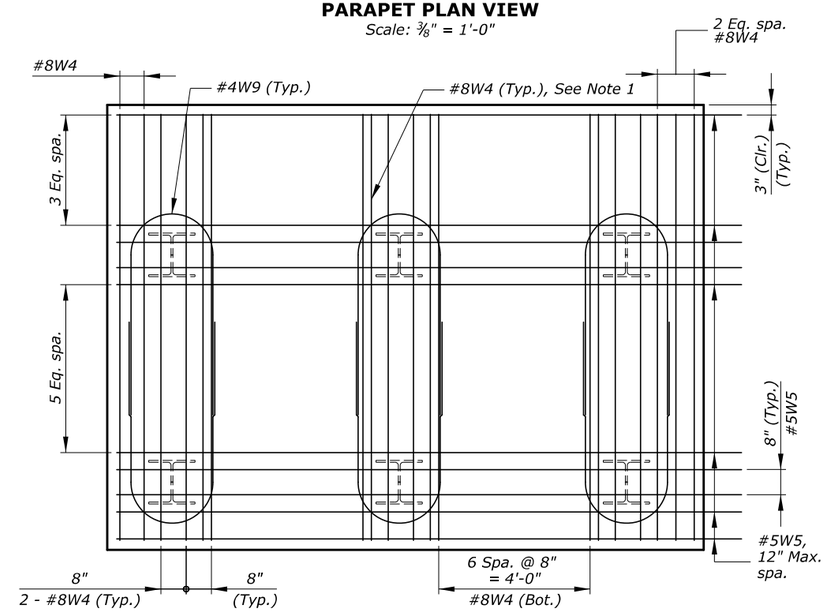

SECTION B-B WINGWALL FOOTING
Scale: ½" = 1'-0"

Key:

n.f. = near face
f.f. = far face
e.f. = each face

U.S. DEPARTMENT OF TRANSPORTATION
FEDERAL HIGHWAY ADMINISTRATION
EASTERN FEDERAL LANDS HIGHWAY DIVISION

BLUE RIDGE PARKWAY

BRIDGE OVER I-26

WINGWALL C REINFORCEMENT

NO.	DATE	BY	REVISIONS	NO.	DATE	BY	REVISIONS

DESIGNED BY	DRAWN BY	CHECKED BY	SCALE	PROJECT TEAM LEADER	BRIDGE PLAN SHEET	DATE	BRP NO.
LE	LE	CWN	As Shown	George Choubah	16 of 228	December 2018	BRP-1265

ACTUAL FILE:R16_BLRI_I26_WINGWALL C REINFORCEMENT.dgn
M:\PROJECTS_STATE_DOT\NC\blri_I26_nepa\Bridge\Microstation\Bridge Design Files\0_OPROJECTS.dgn
14-Dec-2018 12:17 PM

STATE	PROJECT	SHEET NUMBER
NC	BLRI OVER I-26	R17

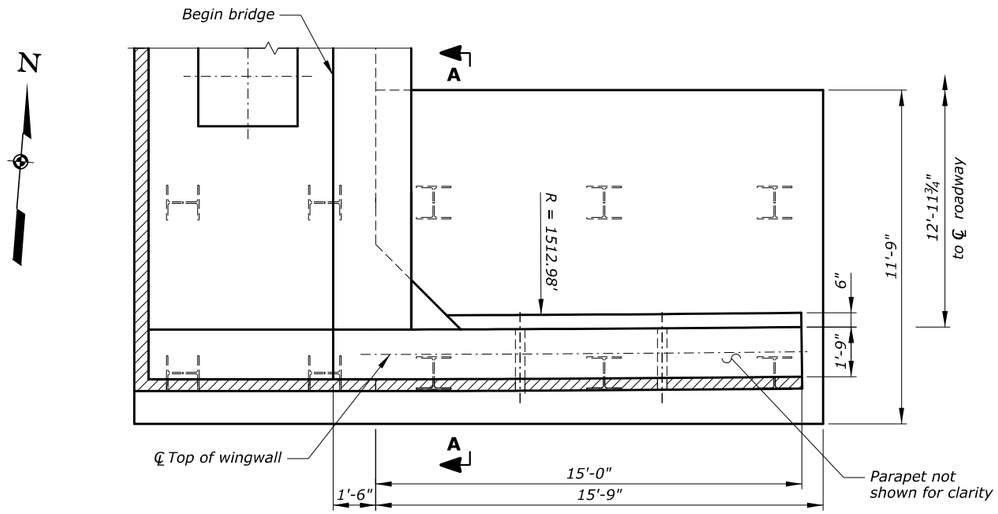

WINGWALL D PLAN

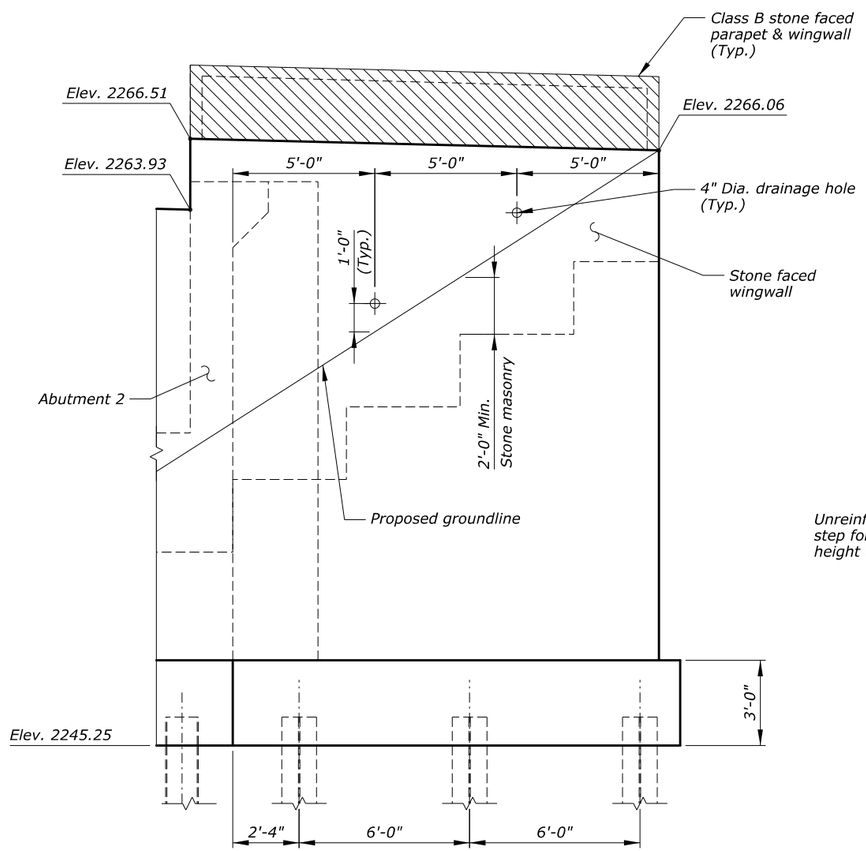

WINGWALL D ELEVATION

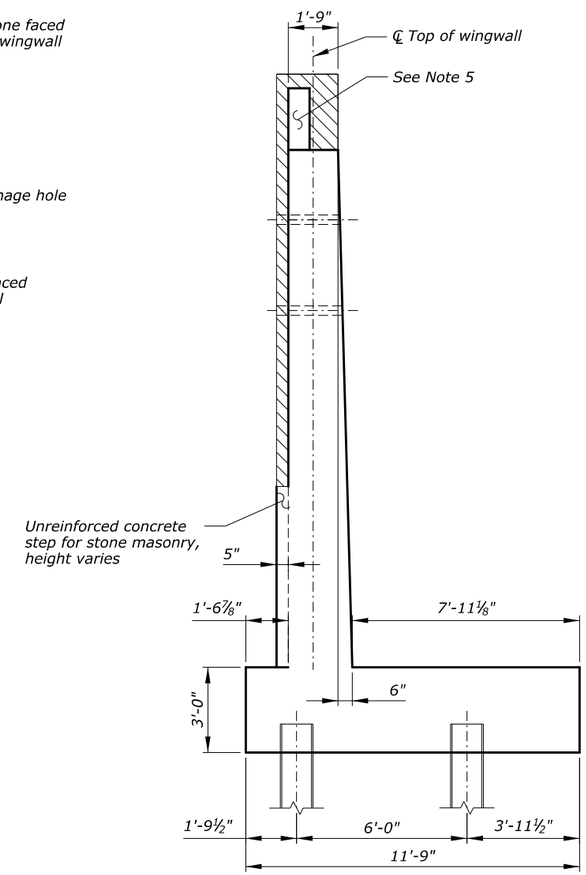

SECTION A-A

Note:

1. *See "ABUTMENT 2 REINFORCEMENT" and "ABUTMENT 2 LAYOUT" sheets for additional information.*
2. *See "WINGWALL D REINFORCEMENT" sheet for additional information.*
3. *See "FOUNDATION LAYOUT" sheet for additional information.*
4. *Anchor masonry to concrete per anchor manufacturer's instructions utilizing stainless steel dovetail anchor and slots, spaced at 24 inch max.*
5. *See "WINGWALL B LAYOUT" sheet for stone masonry details.*
6. *Adjust elevation of weepholes to outlet 1-ft above finish grade.*
7. *See BRIDGE RAIL and "APPROACH SLAB" sheets for additional information.*

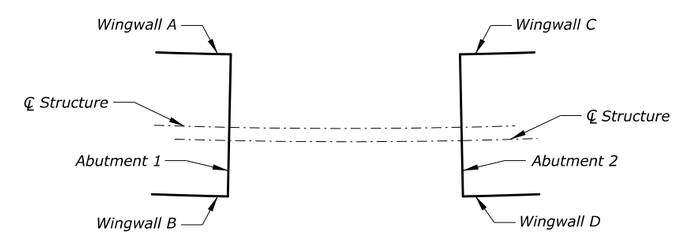

Key:

n.f. = near face
f.f. = far face
e.f. = each face

U.S. DEPARTMENT OF TRANSPORTATION
FEDERAL HIGHWAY ADMINISTRATION
EASTERN FEDERAL LANDS HIGHWAY DIVISION

BLUE RIDGE PARKWAY

BRIDGE OVER I-26

WINGWALL D LAYOUT

NO.	DATE	BY	REVISIONS	NO.	DATE	BY	REVISIONS	DESIGNED BY	DRAWN BY	CHECKED BY	SCALE	PROJECT TEAM LEADER	BRIDGE PLAN SHEET	DATE	BRP NO.
								LE	LE	CWN	⅜" = 1'-0"	George Choubah	17 of 228	December 2018	BRP-1265

ACTUAL FILE:R17_BLRI_I26_WINGWALL LAYOUT D.dgn
M:\PROJECTS_STATE_DOT\NC\blri_I26_nepo\Bridge\Microstation\Bridge Design Files\0_OPROJECTS.dgn
14-Dec-2018 12:17 PM

STATE	PROJECT	SHEET NUMBER
NC	BLRI OVER I-26	R18

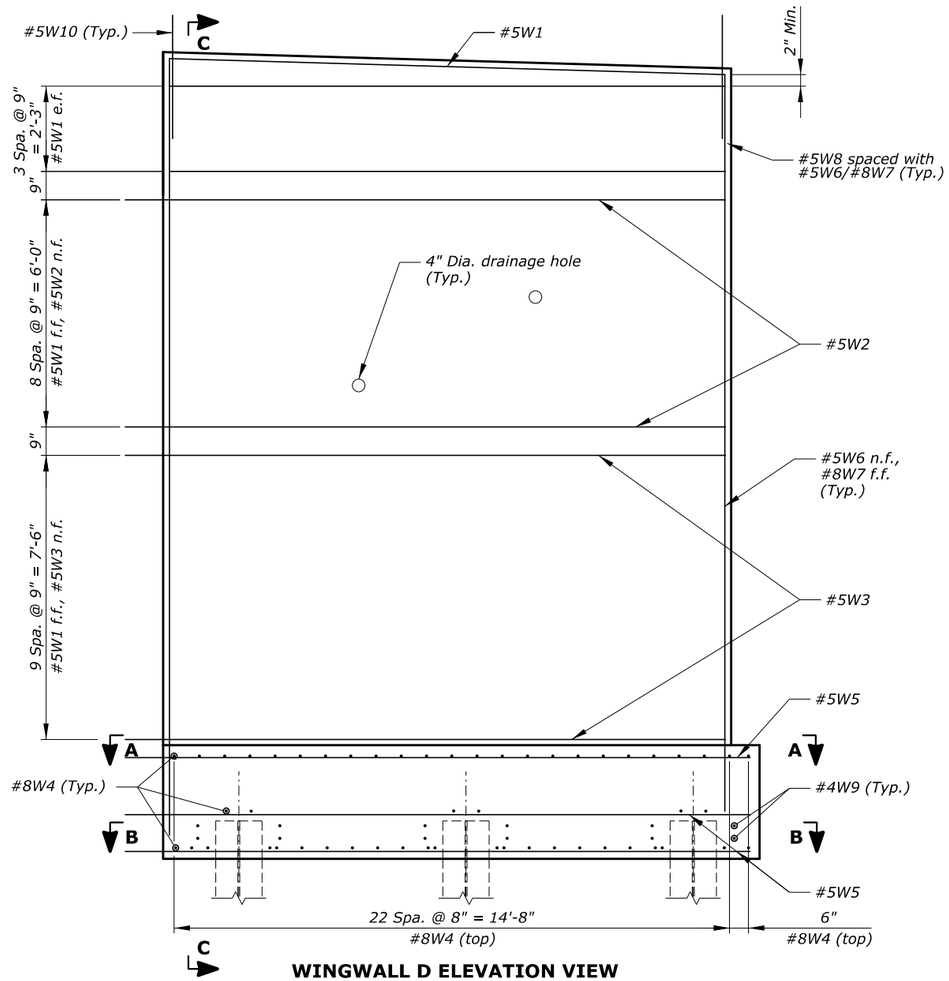

WINGWALL D ELEVATION VIEW

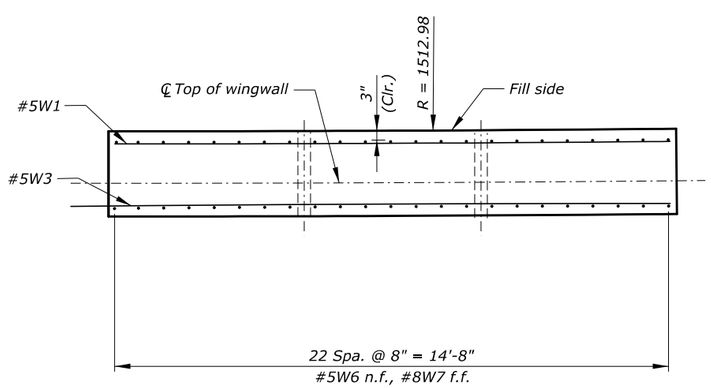

SECTION A-A

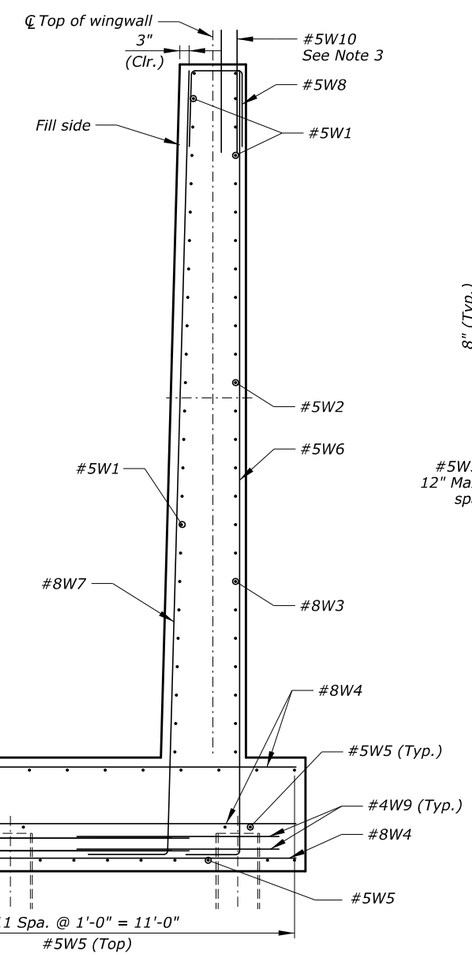

SECTION C-C

Notes:

1. Space and cut all reinforcement to maintain 2-inch clearance around H-piles and adjacent reinforcement. Maximum spacing of 8 inches.
2. See "WINGWALL D LAYOUT" sheet for additional information.
3. See "WINGWALL C REINFORCEMENT" sheet for additional information.
4. Provide a minimum of 2'-0" lap splices for #5 bars.

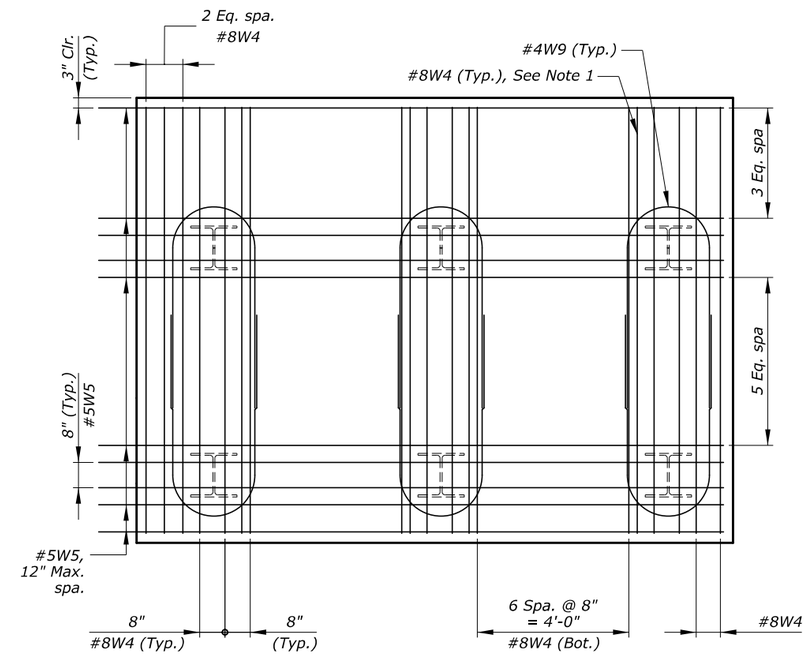

SECTION B-B WINGWALL FOOTING

Key:

n.f. = near face
f.f. = far face
e.f. = each face

U.S. DEPARTMENT OF TRANSPORTATION
FEDERAL HIGHWAY ADMINISTRATION
EASTERN FEDERAL LANDS HIGHWAY DIVISION

BLUE RIDGE PARKWAY

BRIDGE OVER I-26

WINGWALL D REINFORCEMENT

NO.	DATE	BY	REVISIONS	NO.	DATE	BY	REVISIONS	DESIGNED BY	DRAWN BY	CHECKED BY	SCALE	PROJECT TEAM LEADER	BRIDGE PLAN SHEET	DATE	BRP NO.
								LE	LE	CWN	½" = 1'-0"	George Choubah	18 of 228	December 2018	BRP-1265

ACTUAL FILE:R18_BLRI_I26_WINGWALL D REINFORCEMENT.dgn
M:\PROJECTS_STATE_DOT\WC\blri_I26_nepo\Bridge\Microstation\Bridge Design Files\0_OPROJECTS.dgn
14-Dec-2018 12:17 PM

STATE	PROJECT	SHEET NUMBER
NC	BLRI OVER I-26	R19

Notes:

1. *For segment embedment and footing recess details, see "PIER MISCELLANEOUS DETAILS - 1" sheet.*
2. *Minimum clear cover is 2 inches, unless otherwise noted.*
3. *Provide a minimum of 3 feet of backfill cover over the top of the pier footings. Backfill shall conform to NCDOT select material fill.*
4. *Anchorages T1 and T2, T3 and T4, T5 and T6 respectively are for one continuous 19 strand tendon. Each tendon requires two-end stressing for symmetry of the structure and tendon geometry. Meeting the stress conditions stated on the "GENERAL NOTES - 1" and "GENERAL NOTES -2" sheet.*

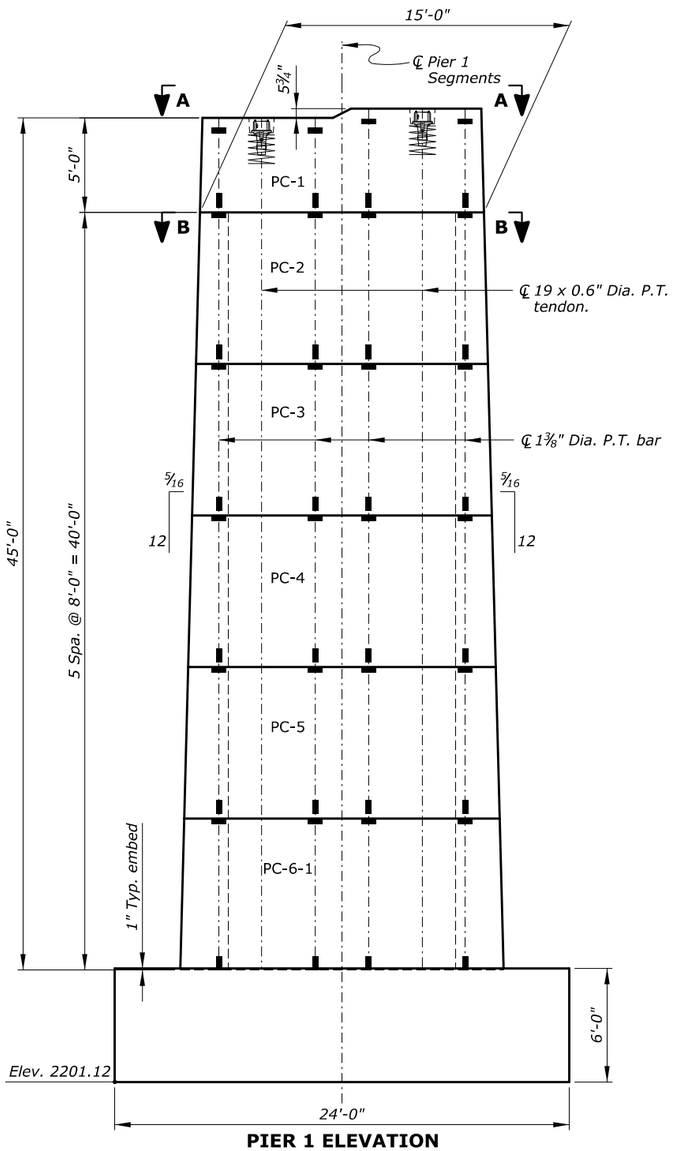

PIER 1 ELEVATION
Scale: ¾" = 1'-0"
(Looking upstation)

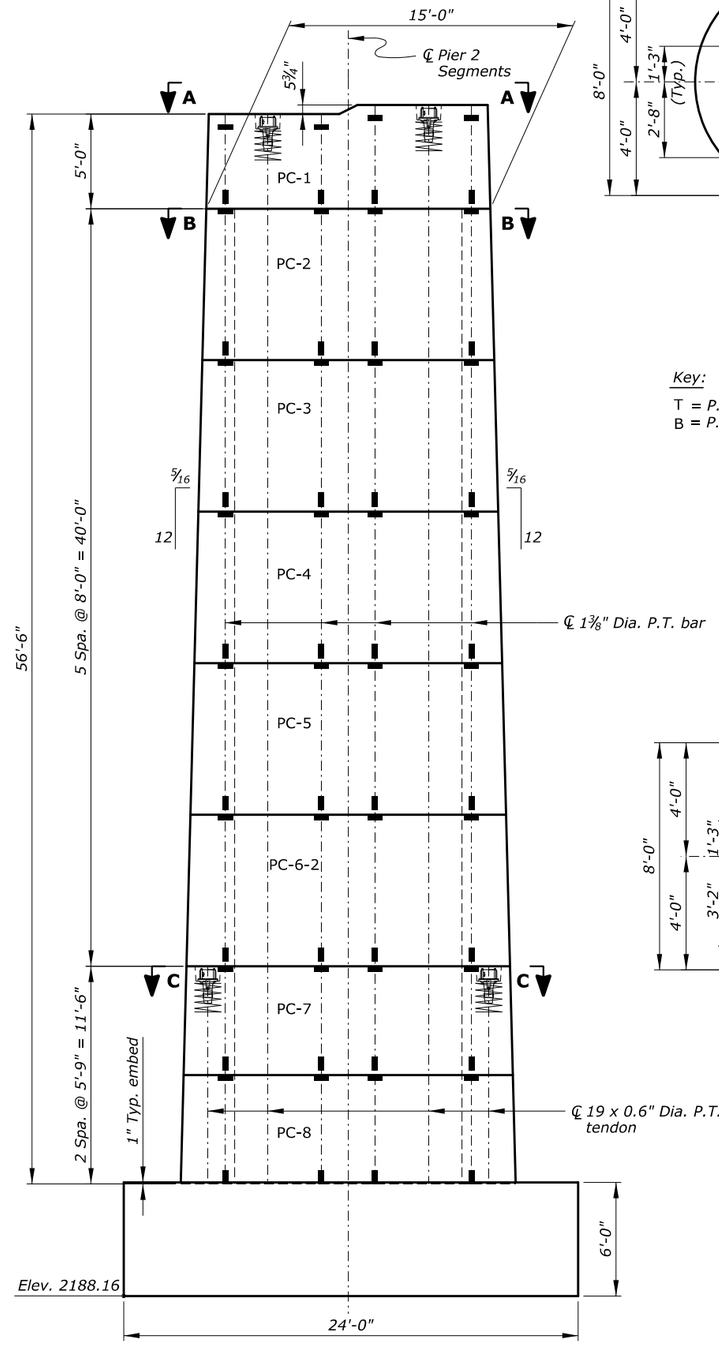

PIER 2 ELEVATION
Scale: ¾" = 1'-0"
(Looking upstation)

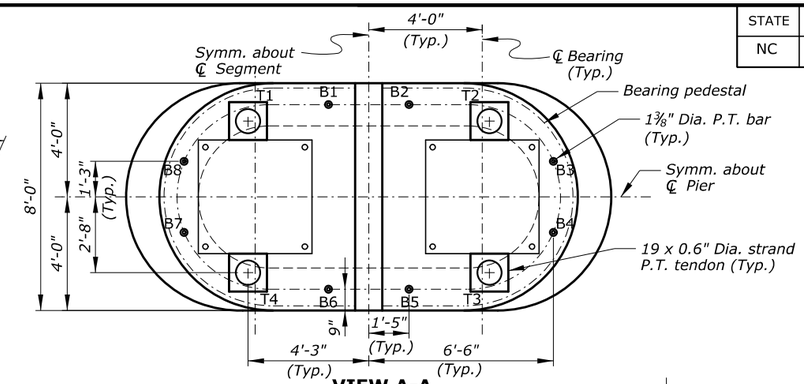

VIEW A-A
Scale: ⅜" = 1'-0"

Key:
T = *P.T. Tendon*
B = *P.T. Bar*

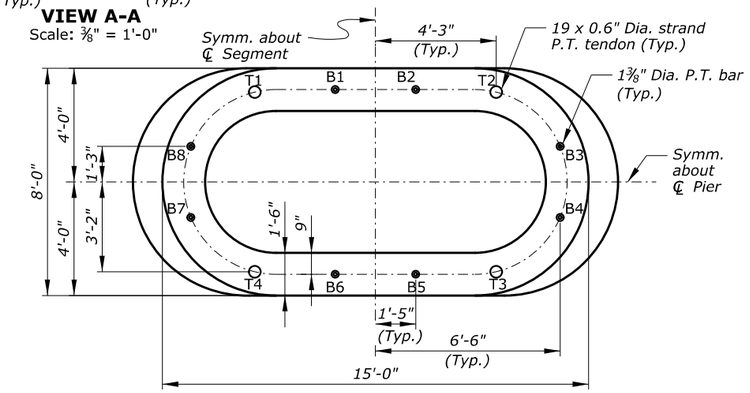

SECTION B-B
Scale: ⅜" = 1'-0"

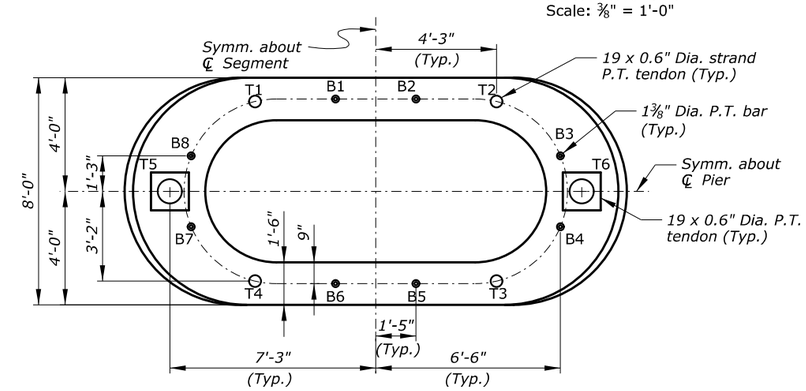

SECTION C-C
Scale: ⅜" = 1'-0"

LEGEND

- *Tendon Anchorage*
- *P.T. Bar Anchor Plate*
- *P.T. Bar Coupler*

U.S. DEPARTMENT OF TRANSPORTATION
FEDERAL HIGHWAY ADMINISTRATION
EASTERN FEDERAL LANDS HIGHWAY DIVISION

BLUE RIDGE PARKWAY

BRIDGE OVER I-26

PIER LAYOUT

NO.	DATE	BY	REVISIONS	NO.	DATE	BY	REVISIONS	DESIGNED BY	DRAWN BY	CHECKED BY	SCALE	PROJECT TEAM LEADER	BRIDGE PLAN SHEET	DATE	BRP NO.
								HC	BK	CWN	As Shown	George Choubah	19 of 228	December 2018	BRP-1265

ACTUAL FILE:R19_BLRI_I26_PIER LAYOUT.DGN
M:\PROJECTS_STATE_DOT\NC\blri_I26_nepo\Bridge\Microstation\Bridge Design Files\0_OPROJECTS.dgn
14-Dec-2018 12:17 PM

STATE	PROJECT	SHEET NUMBER
NC	BLRI OVER I-26	R20

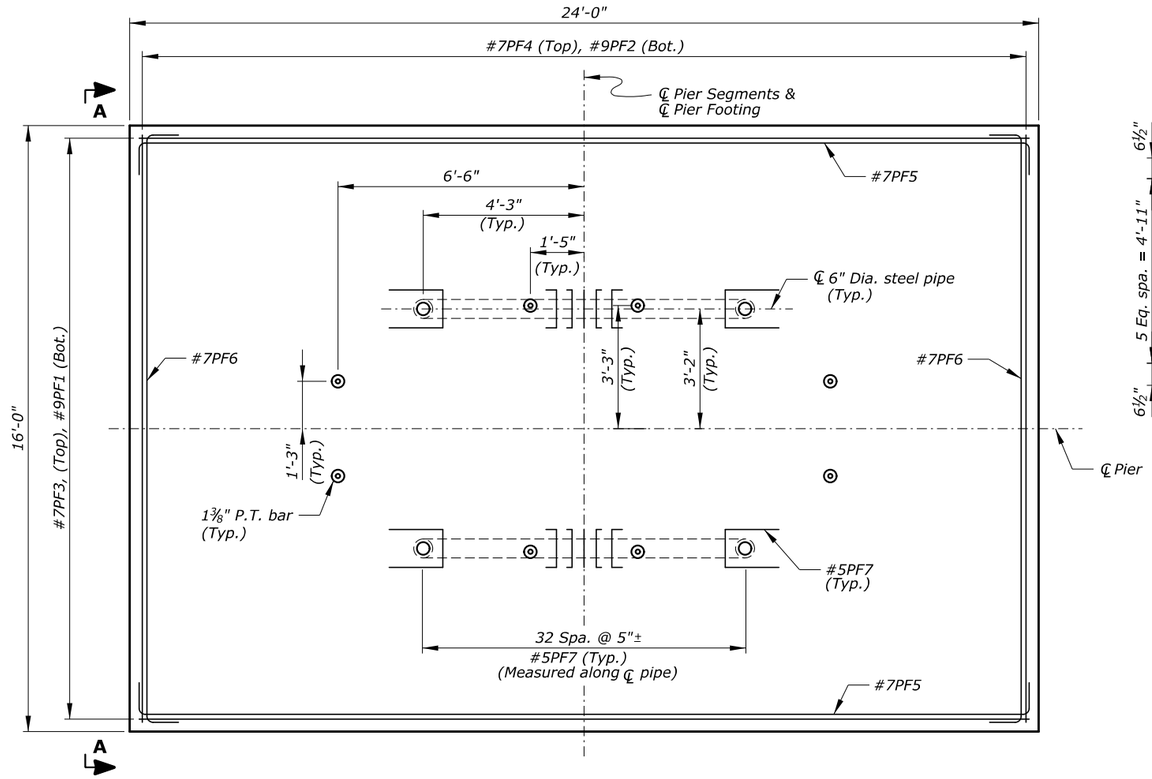

PLAN
Scale: ½" = 1'-0"

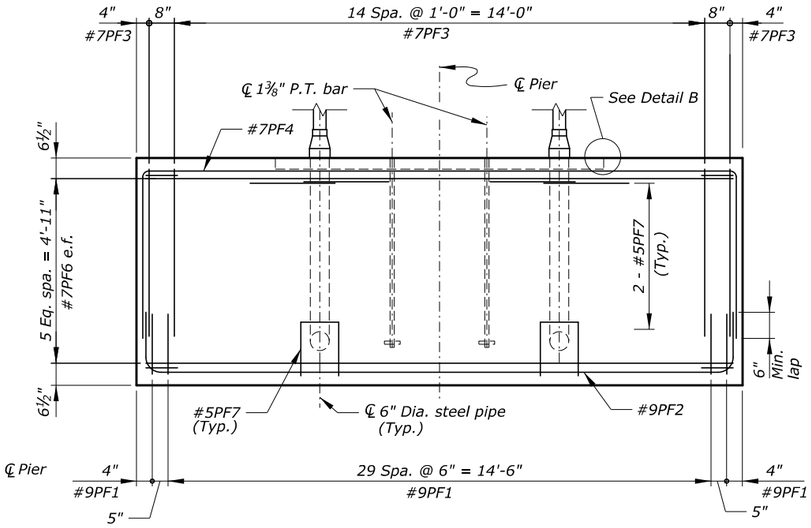

VIEW A-A
Scale: ½" = 1'-0"

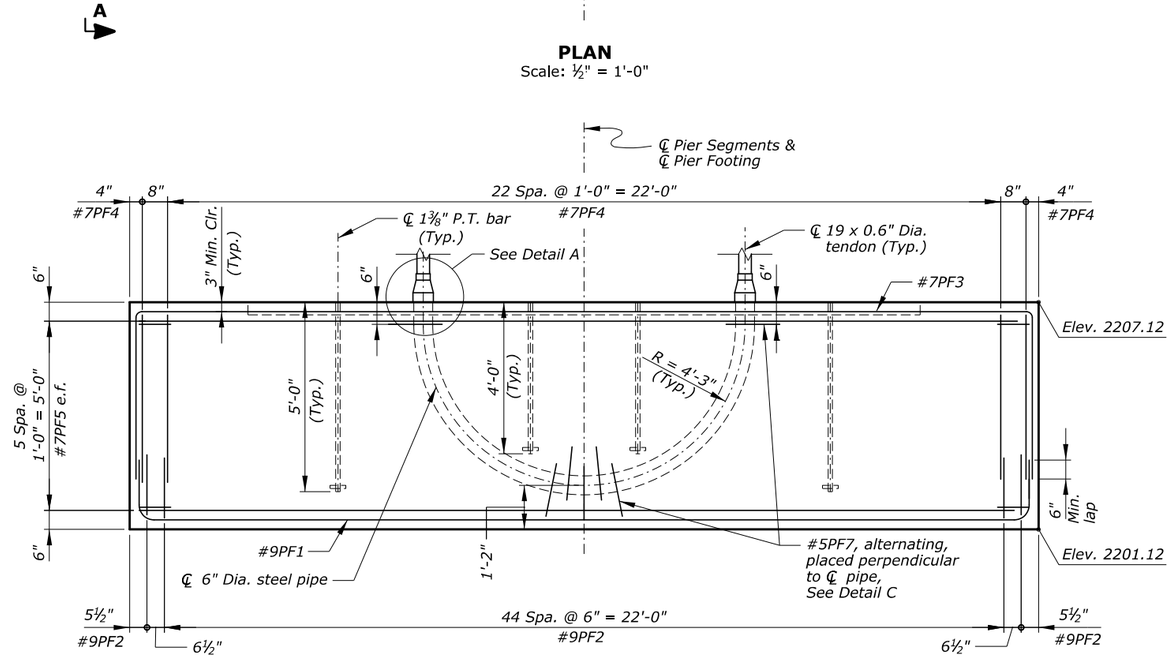

ELEVATION
Scale: ½" = 1'-0"

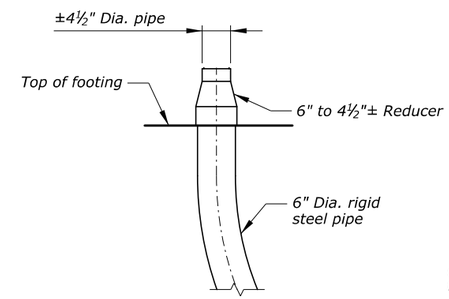

DETAIL A
Scale: ½" = 1'-0"

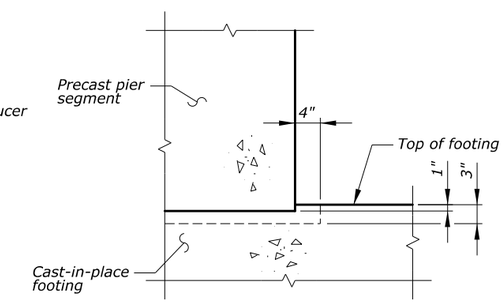

DETAIL B
Scale: 1" = 1'-0"

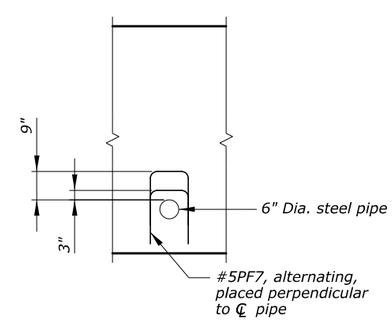

DETAIL C
Scale: ½" = 1'-0"

U.S. DEPARTMENT OF TRANSPORTATION
FEDERAL HIGHWAY ADMINISTRATION
EASTERN FEDERAL LANDS HIGHWAY DIVISION

BLUE RIDGE PARKWAY

BRIDGE OVER I-26

PIER 1 FOOTING

NO.	DATE	BY	REVISIONS	NO.	DATE	BY	REVISIONS	DESIGNED BY	DRAWN BY	CHECKED BY	SCALE	PROJECT TEAM LEADER	BRIDGE PLAN SHEET	DATE	BRP NO.
								HC	BK	CWN	As Shown	George Choubah	20 of 228	March 2019	BRP-1265

ACTUAL FILE:R20_BLRI_I26_PIER 1 FOOTING.DGN
M:\PROJECTS_STATE_DOT\NC\blri_I26_nepo\Bridge\Microstation\Bridge Design Files\0_OPROJECTS.dgn
13-Mar-2019 04:23 PM

STATE	PROJECT	SHEET NUMBER
NC	BLRI OVER I-26	R21

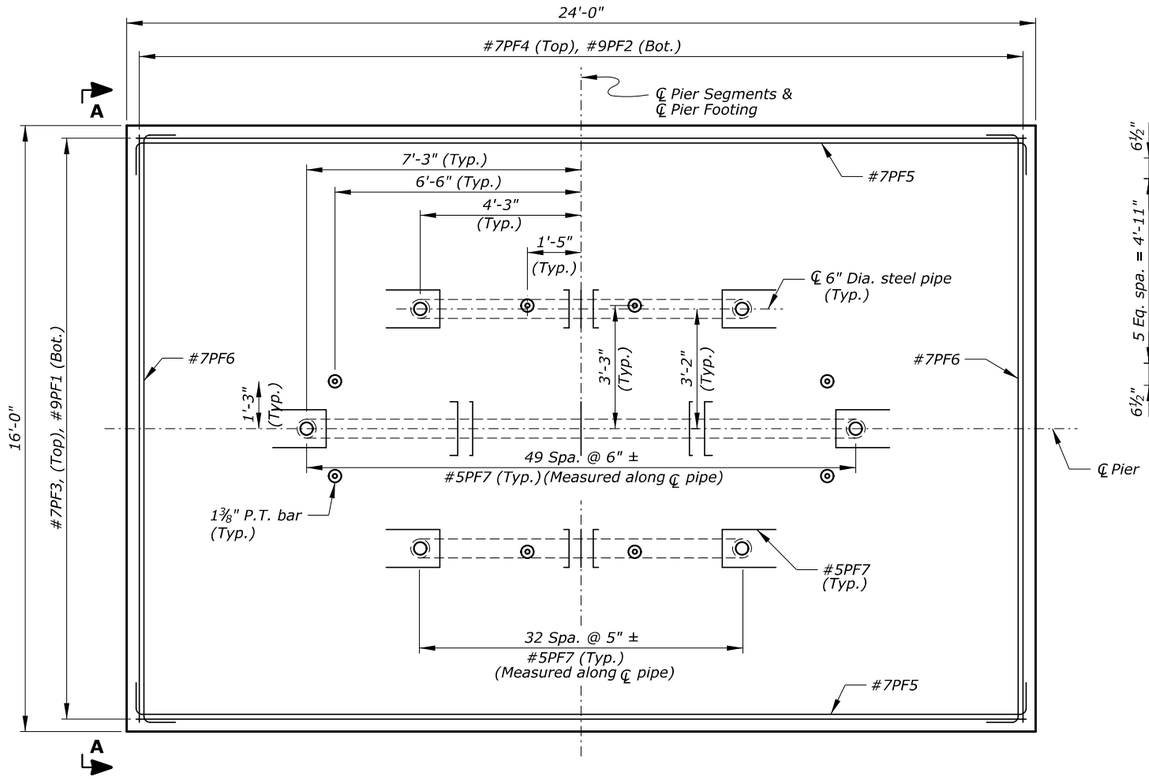

PLAN
Scale: ½" = 1'-0"

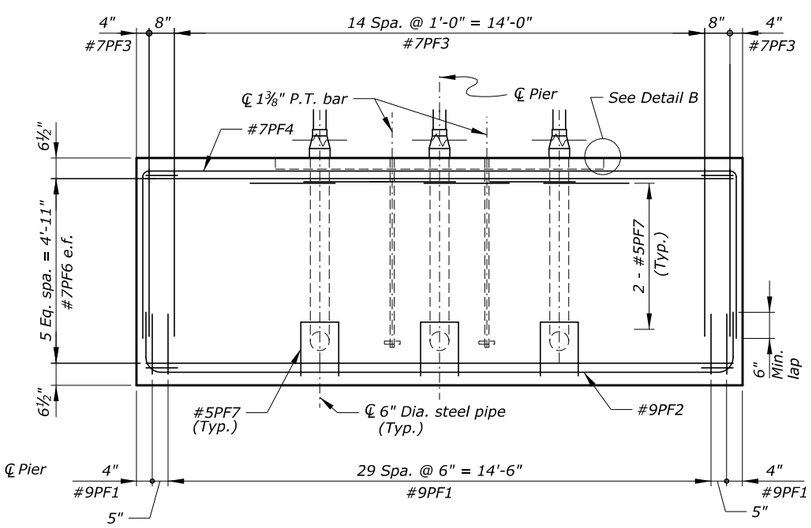

VIEW A-A
Scale: ½" = 1'-0"

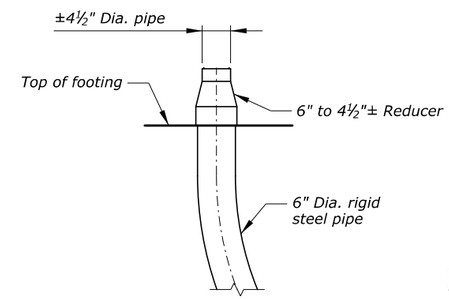

DETAIL A
Scale: ½" = 1'-0"

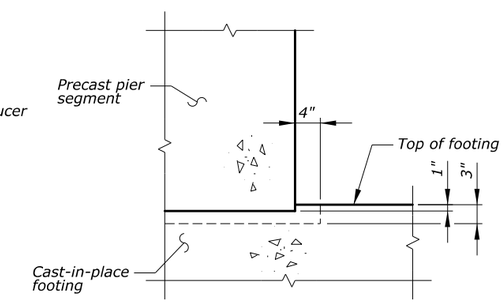

DETAIL B
Scale: 1" = 1'-0"

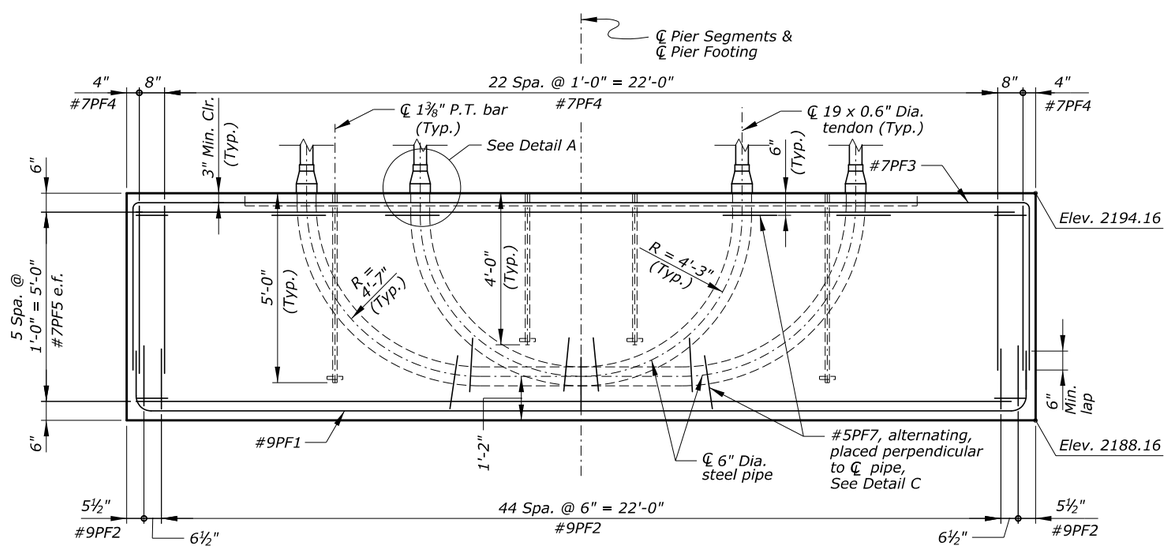

ELEVATION
Scale: ½" = 1'-0"

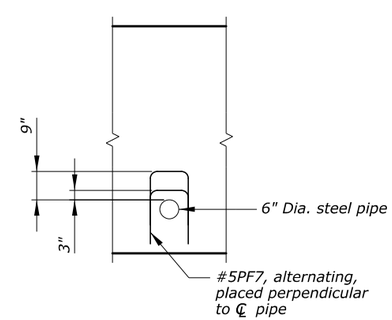

DETAIL C
Scale: ½" = 1'-0"

U.S. DEPARTMENT OF TRANSPORTATION
FEDERAL HIGHWAY ADMINISTRATION
EASTERN FEDERAL LANDS HIGHWAY DIVISION

BLUE RIDGE PARKWAY

BRIDGE OVER I-26

PIER 2 FOOTING

NO.	DATE	BY	REVISIONS	NO.	DATE	BY	REVISIONS	DESIGNED BY	DRAWN BY	CHECKED BY	SCALE	PROJECT TEAM LEADER	BRIDGE PLAN SHEET	DATE	BRP NO.
								HC	BK	CWN	As Shown	George Choubah	21 of 228	March 2019	BRP-1265

ACTUAL FILE:R21_BLRI_I26_PIER 2 FOOTING.DGN
M:\PROJECTS_STATE_DOT\NC\blri_I26_nepo\Bridge\Microstation\Bridge Design Files\0_OPROJECTS.dgn
13-Mar-2019 04:23 PM

STATE	PROJECT	SHEET NUMBER
NC	BLRI OVER I-26	R22

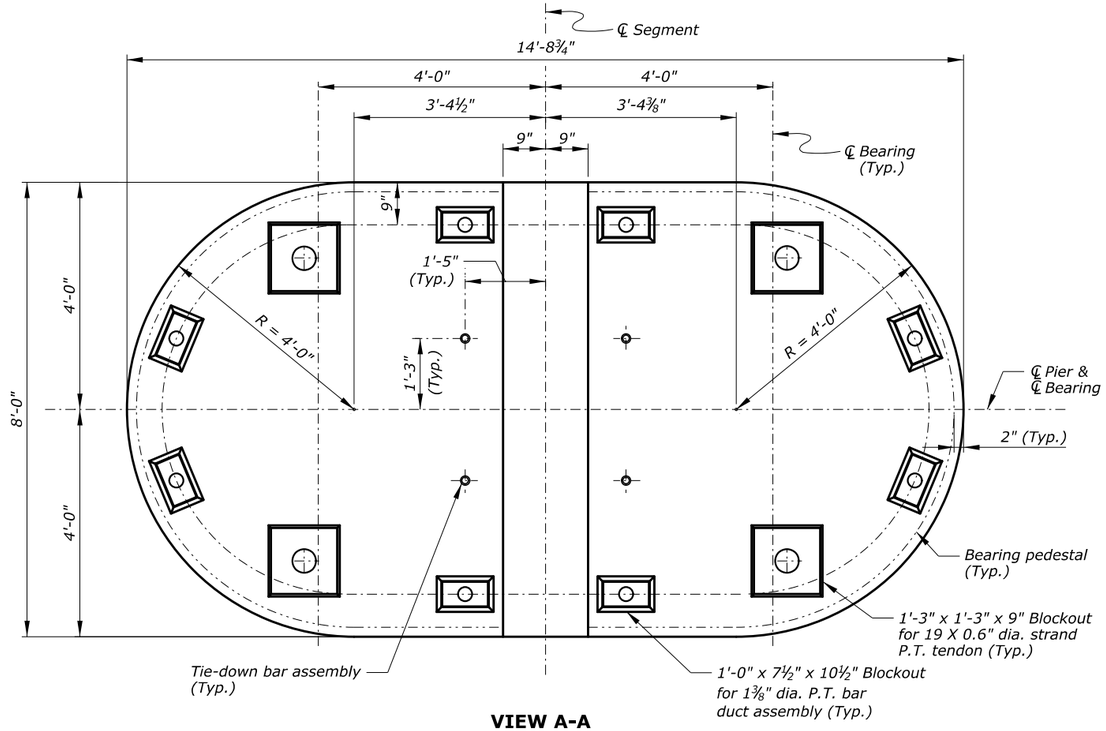

VIEW A-A

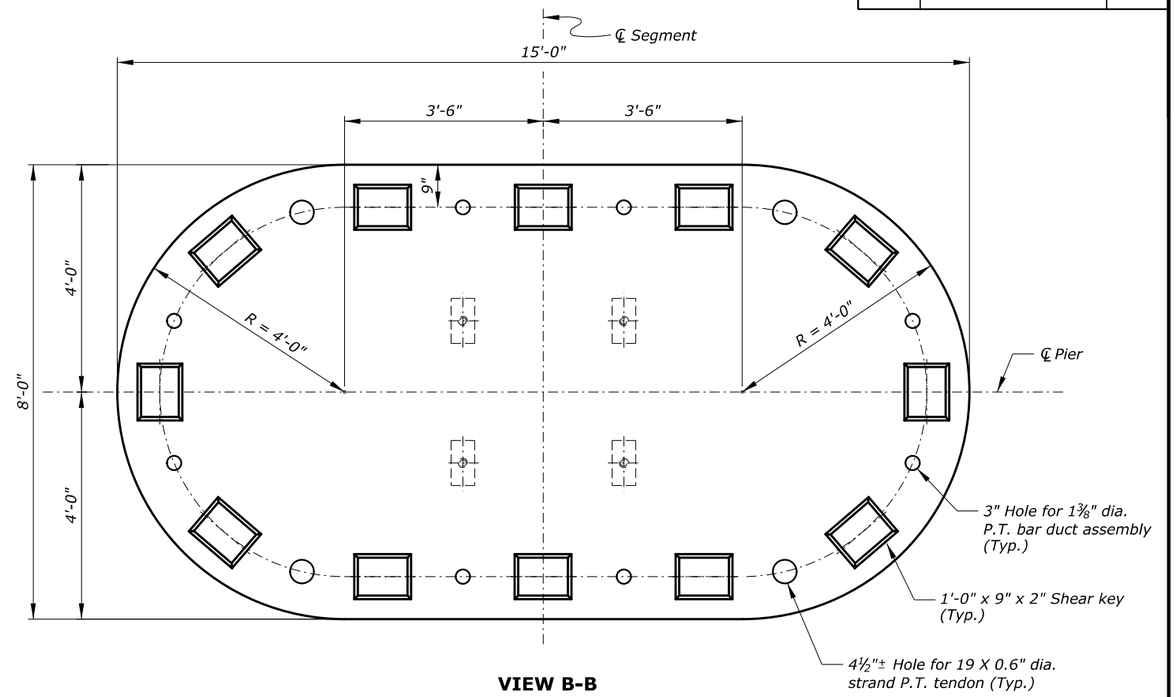

VIEW B-B

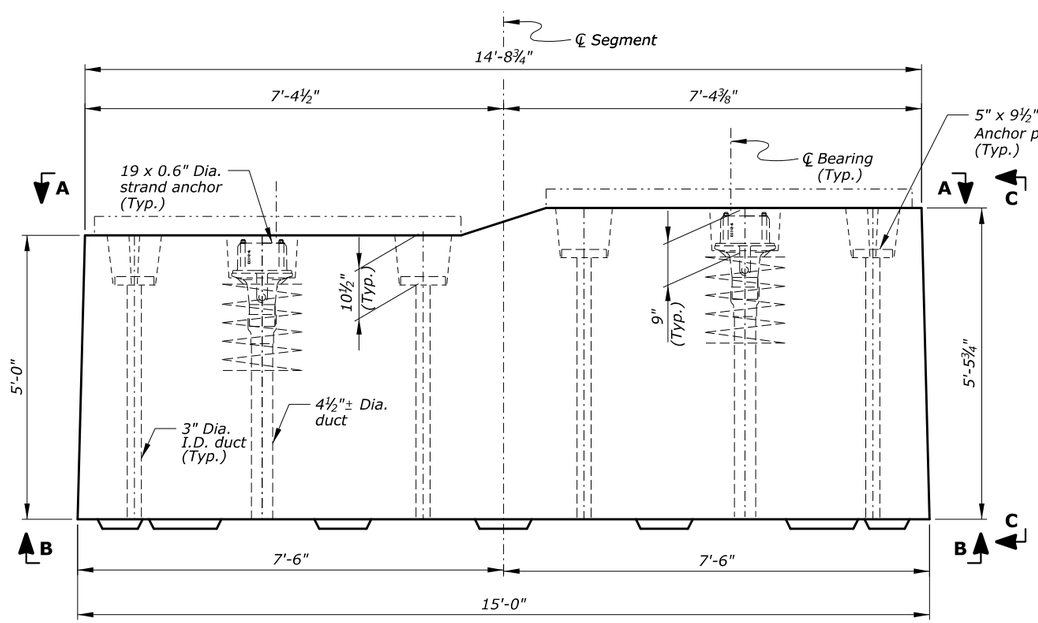

ELEVATION

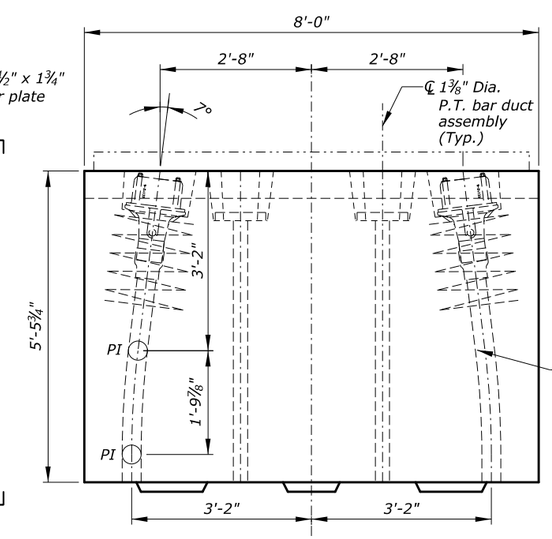

VIEW C-C

(P.T. bars B1, B2, B5, & B6 not shown for clarity)

***ESTIMATED QUANTITIES**

ITEM	UNIT	QUANTITY
Concrete - Class Special (6000 psi)	Cu. Yd.	21.1
9½" x 5" x 1¾" P.T. Bar Anchor Plate	Each	8
1⅜" P.T. Bar Duct Assembly**	Each	8
4½"± I.D. Duct (7'-2" long)	Each	4
Duct Coupler (4½"± I.D. Duct)	Each	4

* Quantities are for one Precast Box Pier Segment
** Duct assembly consists of 4½"± I.D. duct (4'-0" long) with duct adapter

Notes:

1. For shear key details, see "PIER MISCELLANEOUS DETAILS - 1" sheet.
2. For post-tensioning details, see "PIER MISCELLANEOUS DETAILS - 1" sheet.
3. For bearing pedestal details, see "PIER MISCELLANEOUS DETAILS - 2" sheet.

U.S. DEPARTMENT OF TRANSPORTATION
FEDERAL HIGHWAY ADMINISTRATION
EASTERN FEDERAL LANDS HIGHWAY DIVISION

BLUE RIDGE PARKWAY

BRIDGE OVER I-26

PIER SEGMENT PC-1 LAYOUT

NO.	DATE	BY	REVISIONS	NO.	DATE	BY	REVISIONS	DESIGNED BY	DRAWN BY	CHECKED BY	SCALE	PROJECT TEAM LEADER	BRIDGE PLAN SHEET	DATE	BRP NO.
								HC	BK	CWN	¾" = 1'-0"	George Choubah	22 of 228	December 2018	BRP-1265

ACTUAL FILE:R22_BLRI_I26_PIER SEGMENT LAYOUT_PC-1.DGN
M:\PROJECTS_STATE_DOT\NC\blri_I26_nepo\Bridge\Microstation\Bridge Design Files\0_OPROJECTS.dgn
14-Dec-2018 12:17 PM

STATE	PROJECT	SHEET NUMBER
NC	BLRI OVER I-26	R23

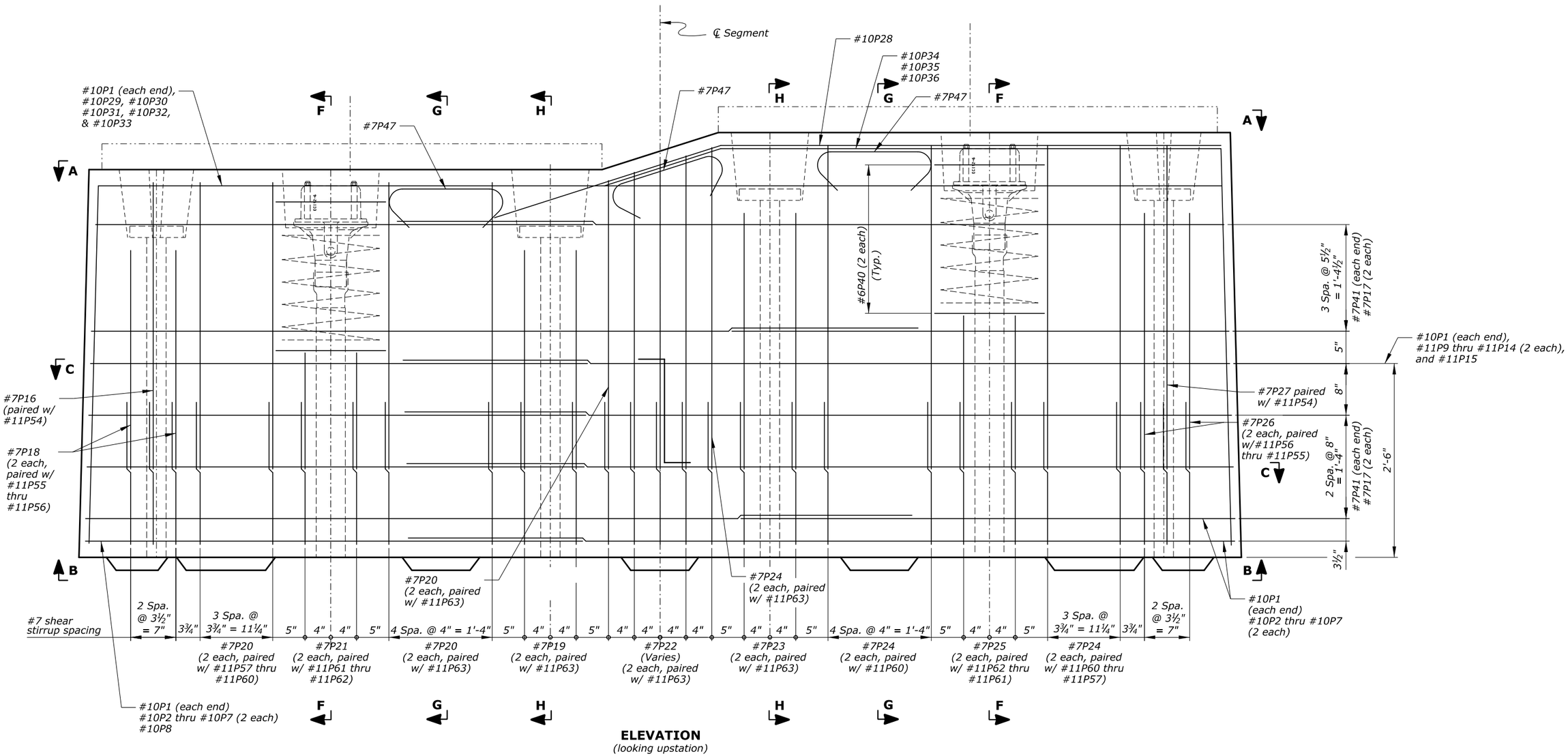

ELEVATION
(looking upstation)

Notes:

1. *For View A-A, View B-B, and Section C-C details, see "PIER SEGMENT PC-1 REINFORCEMENT - 2" sheet.*
2. *For Section E-E, F-F, G-G, and H-H details, see "PIER SEGMENT PC-1 REINFORCEMENT - 3" sheet.*
3. *Space all reinforcement to clear P.T. bars, P.T. tendons, and blockouts.*

U.S. DEPARTMENT OF TRANSPORTATION
FEDERAL HIGHWAY ADMINISTRATION
EASTERN FEDERAL LANDS HIGHWAY DIVISION

BLUE RIDGE PARKWAY

BRIDGE OVER I-26

PIER SEGMENT PC-1 REINFORCEMENT - 1

NO.	DATE	BY	REVISIONS	NO.	DATE	BY	REVISIONS	DESIGNED BY	DRAWN BY	CHECKED BY	SCALE	PROJECT TEAM LEADER	BRIDGE PLAN SHEET	DATE	BRP NO.
								HC	BK	CWN	1½" = 1'-0"	George Choubah	23 of 228	December 2018	BRP-1265

ACTUAL FILE:R23_BLRI_I26_PIER SEGMENT REINF PC-1 - 1.DGN
M:\PROJECTS_STATE_DOT\NC\blri_I26_nepo\Bridge\Microstation\Bridge Design Files\0_OPROJECTS.dgn
14-Dec-2018 12:17 PM

STATE	PROJECT	SHEET NUMBER
NC	BLRI OVER I-26	R24

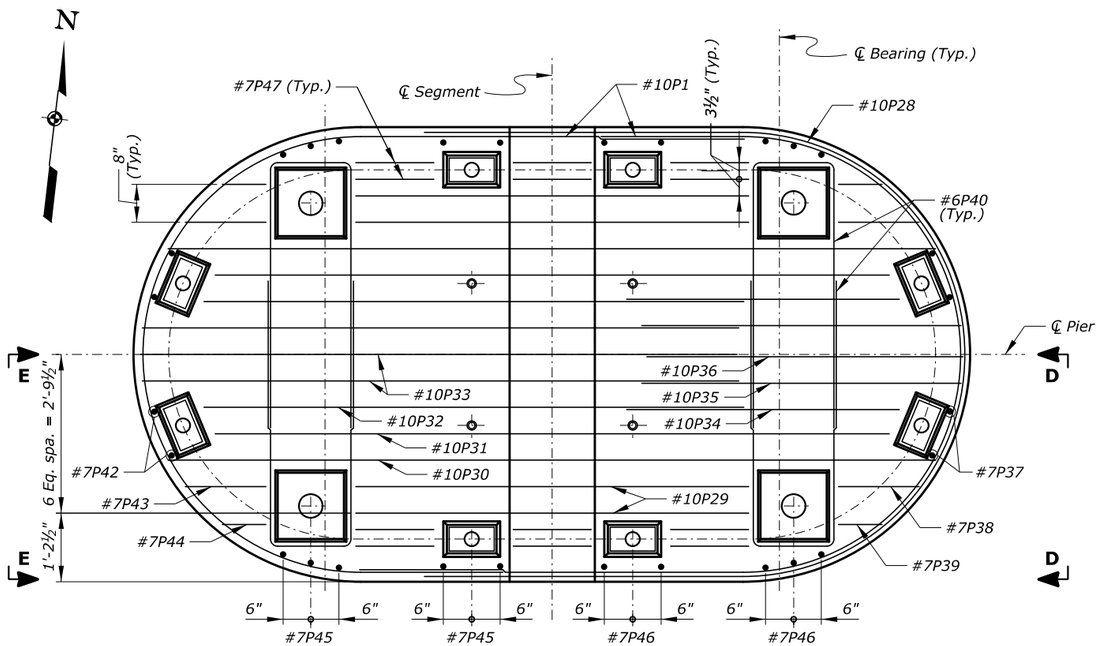

VIEW A-A
(Symmetrical about ℄ Pier)
(#7 transverse stirrups not shown for clarity)

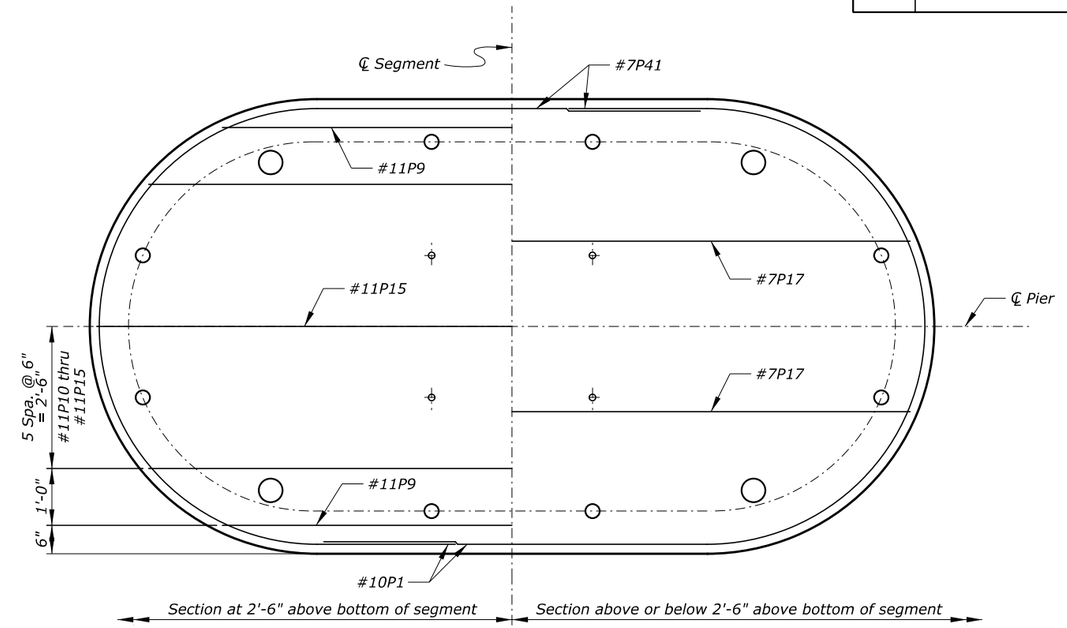

SECTION C-C
(Symmetrical about ℄ Pier and ℄ Segment)
(#7 transverse stirrups not shown for clarity)

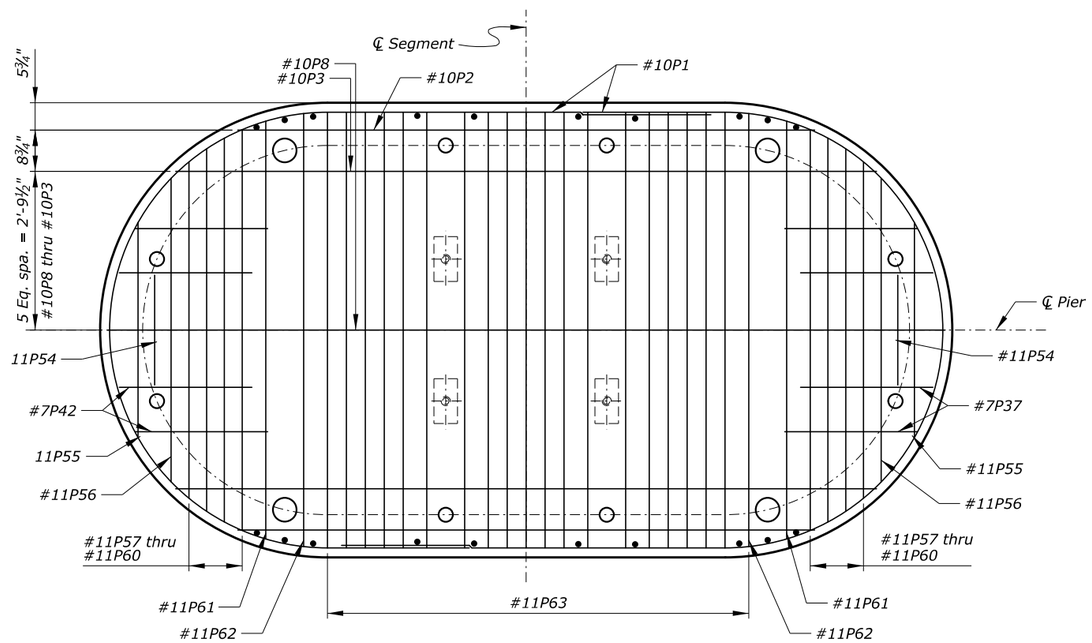

VIEW B-B
(Symmetrical about ℄ Pier and ℄ Segment)
(Bars #10P29 through #10P36 not shown for clarity)

Notes:

1. *For locations of View A-A, View B-B, and Section C-C, see "PIER SEGMENT PC-1 REINFORCEMENT - 1" sheet.*
2. *For View D-D and E-E details, see "PIER SEGMENT PC-1 REINFORCEMENT - 3" sheet.*
3. *Space all reinforcement to clear P.T. bars, P.T. tendons, and blockouts.*

U.S. DEPARTMENT OF TRANSPORTATION
FEDERAL HIGHWAY ADMINISTRATION
EASTERN FEDERAL LANDS HIGHWAY DIVISION

BLUE RIDGE PARKWAY

BRIDGE OVER I-26

PIER SEGMENT PC-1 REINFORCEMENT - 2

NO.	DATE	BY	REVISIONS	NO.	DATE	BY	REVISIONS

DESIGNED BY	DRAWN BY	CHECKED BY	SCALE	PROJECT TEAM LEADER	BRIDGE PLAN SHEET	DATE	BRP NO.
HC	BK	CWN	¾" = 1'-0"	George Choubah	24 of 228	December 2018	BRP-1265

ACTUAL FILE:R24_BLRI_I26_PIER SEGMENT REINF PC-1 - 2.DGN
M:\PROJECTS_STATE_DOT\NC\blri_i26_nepo\BridgeWlcrostation\Bridge Design Files\0_OPROJECTS.dgn
14-Dec-2018 12:17 PM

STATE	PROJECT	SHEET NUMBER
NC	BLRI OVER I-26	R25

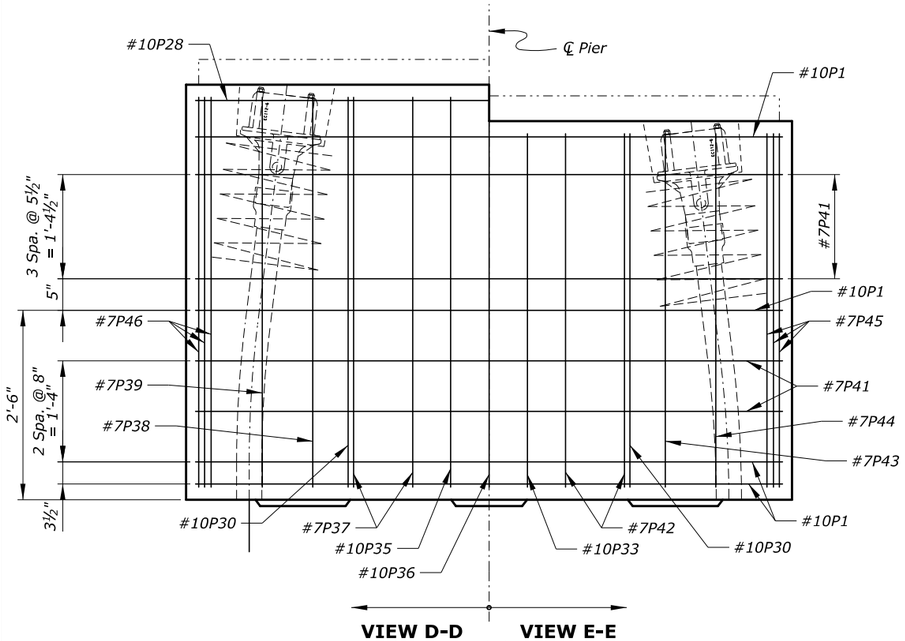

VIEW D-D **VIEW E-E**
(Symmetrical about ℄ Pier)
(P.T. bars not shown for clarity)

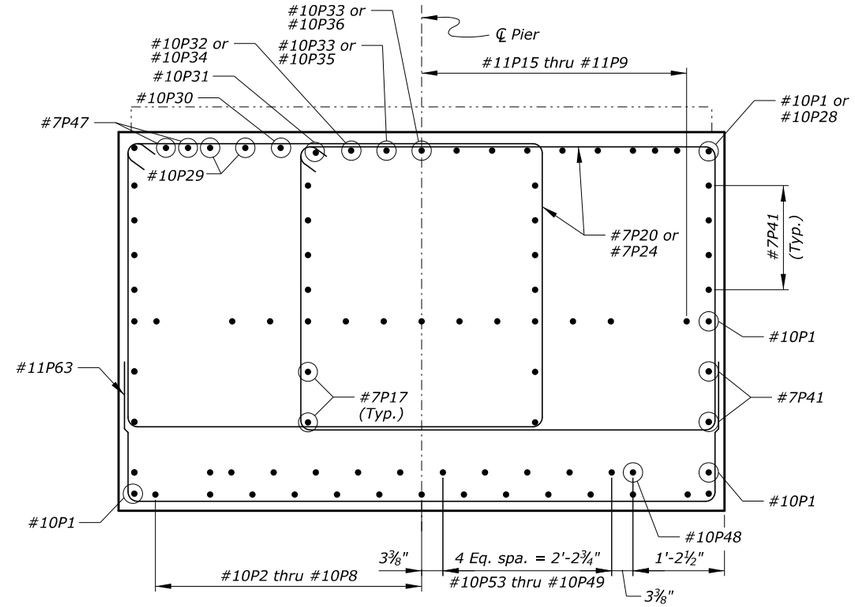

SECTION G-G
(Symmetrical about ℄ Pier)

Notes:

1. For locations of Views D-D and E-E, see "PIER SEGMENT PC-1 REINFORCEMENT - 2" sheet.
2. For locations for Sections F-F, G-G, and H-H, see "PIER SEGMENT PC-1 REINFORCEMENT - 1" sheet.
3. Space all reinforcement to clear P.T. bars, P.T. tendons, and blockouts.

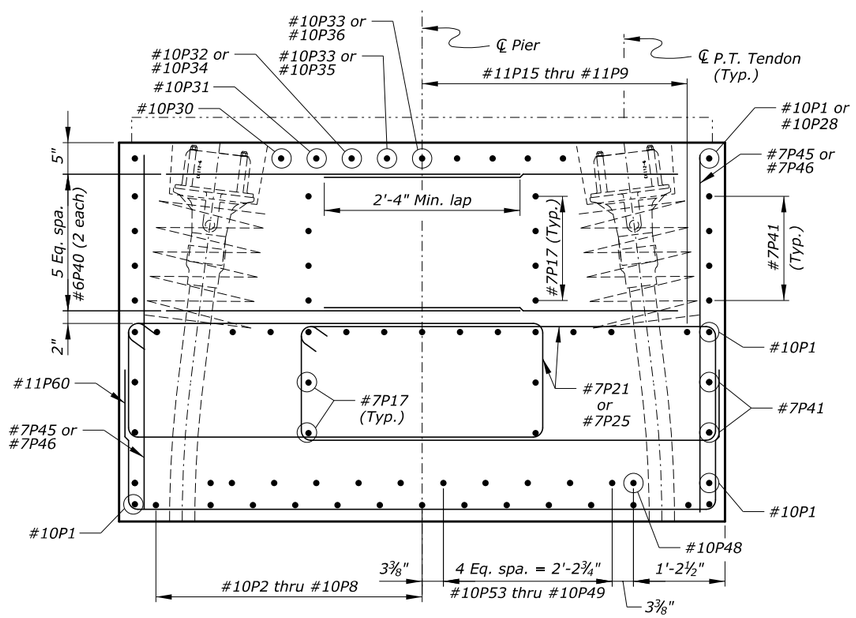

SECTION F-F
(Symmetrical about ℄ Pier)

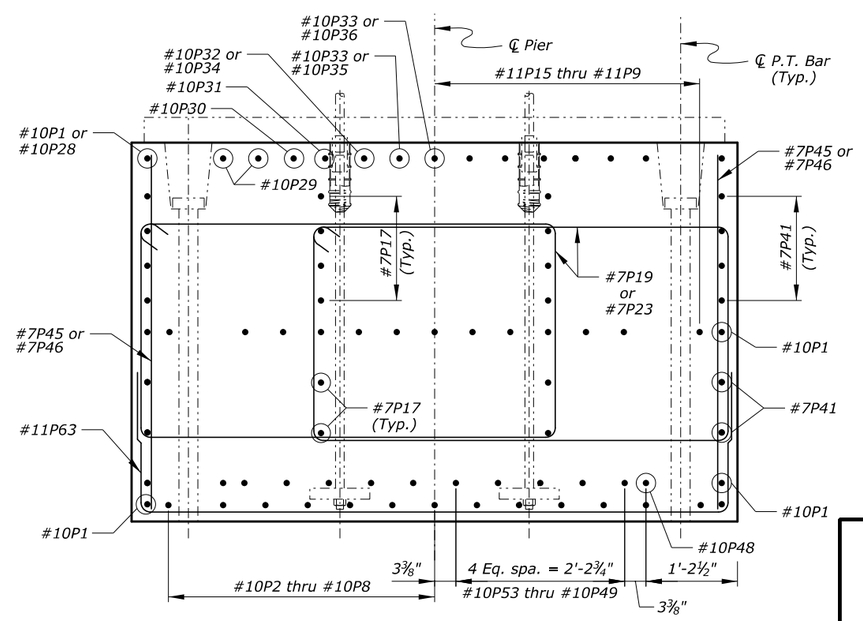

SECTION H-H
(Symmetrical about ℄ Pier)

U.S. DEPARTMENT OF TRANSPORTATION
FEDERAL HIGHWAY ADMINISTRATION
EASTERN FEDERAL LANDS HIGHWAY DIVISION

BLUE RIDGE PARKWAY

BRIDGE OVER I-26

PIER SEGMENT PC-1 REINFORCEMENT - 3

NO.	DATE	BY	REVISIONS	NO.	DATE	BY	REVISIONS	DESIGNED BY	DRAWN BY	CHECKED BY	SCALE	PROJECT TEAM LEADER	BRIDGE PLAN SHEET	DATE	BRP NO.
								HC	BK	CWN	1" = 1'-0"	George Choubah	25 of 228	December 2018	BRP-1265

ACTUAL FILE:R25_BLRI_I26_PIER SEGMENT REINF PC-1 - 3.DGN
M:\PROJECTS_STATE_DOT\NC\blri_I26_nepa\Bridge\Microstation\Bridge Design Files\0_OPROJECTS.dgn
14-Dec-2018 12:17 PM

STATE	PROJECT	SHEET NUMBER
NC	BLRI OVER I-26	R26

REINFORCING STEEL SCHEDULE — DIMENSION TABLE

Pier Segment PC-1

BAR MK	SIZE	TYPE	PIN SZ	LOCATION	QTY	LENGTH	WEIGHT	A	B	C	D	E	F	G	H	J	K	O	R	V or N
*10P1	10	10		Horiz.	8	21'-3 1/2"	733	6'-9"	12'-0 1/2"	2'-6"								7'-8"	3'-10"	
*10P2	10	17	0'-10 13/16"	Horiz.	2	14'-1 1/2"	122	1'-10"	10'-5 1/2"					1'-10"						
*10P3	10	17	0'-10 13/16"	Horiz.	2	16'-0"	138	1'-10"	12'-4"					1'-10"						
*10P4	10	17	0'-10 13/16"	Horiz.	2	16'-11 1/2"	146	1'-10"	13'-3 1/4"					1'-10"						
*10P5	10	17	0'-10 13/16"	Horiz.	2	17'-7"	151	1'-10"	13'-11 1/4"					1'-10"						
*10P6	10	17	0'-10 13/16"	Horiz.	2	17'-10 1/2"	154	1'-10"	14'-2 1/2"					1'-10"						
*10P7	10	17	0'-10 13/16"	Horiz.	2	18'-2"	156	1'-10"	14'-6"					1'-10"						
*10P8	10	17	0'-10 13/16"	Horiz.	1	18'-3"	79	1'-10"	14'-7"					1'-10"						
*11P9	11	62	1'-0"	Horiz.	2	15'-8"	166	2'-0"	10'-5"					2'-0"						
*11P10	11	62	1'-0"	Horiz.	2	18'-6 1/2"	197	2'-0"	13'-3 3/4"					2'-0"						
*11P11	11	62	1'-0"	Horiz.	2	19'-2"	204	2'-0"	13'-11"					2'-0"						
*11P12	11	62	1'-0"	Horiz.	2	19'-6 1/2"	208	2'-0"	14'-3 1/2"					2'-0"						
*11P13	11	62	1'-0"	Horiz.	2	19'-9"	210	2'-0"	14'-6"					2'-0"						
*11P14	11	62	1'-0"	Horiz.	2	19'-9 1/2"	210	2'-0"	14'-6 1/2"					2'-0"						
*11P15	11	62	1'-0"	Horiz.	1	19'-8"	104	2'-0"	14'-5 1/4"					2'-0"						
*7P16	7	T1	0'-5 5/16"	Stirrups	1	13'-0"	27	0'-9"	3'-9 1/4"	1'-11 3/4"	3'-9 1/4"	1'-11 3/4"		0'-9"						
*7P17	7	17	0'-5 5/16"	Horiz.	12	16'-4"	401	1'-2"	13'-11 3/4"					1'-2"						
*7P18	7	T1	0'-5 5/16"	Horiz.	4	15'-1"	123	0'-9"	3'-10 1/4"	2'-11 1/4"	3'-10 1/4"	2'-11 1/4"		0'-9"						
*7P19	7	T1	0'-5 5/16"	Stirrups	4	18'-2"	149	0'-9"	5'-4 3/4"	2'-11 1/4"	5'-4 3/4"	2'-11 1/4"		0'-9"						
*7P20	7	T1	0'-5 5/16"	Stirrups	20	19'-10"	811	0'-9"	5'-4 3/4"	3'-9 1/4"	5'-4 3/4"	3'-9 1/4"		0'-9"						
*7P21	7	T1	0'-5 5/16"	Stirrups	4	15'-8"	128	0'-9"	5'-4 3/4"	1'-8 1/4"	5'-4 3/4"	1'-8 1/4"		0'-9"						
*7P22	7	T1	0'-5 5/16"	Stirrups	2 sets of 3	19'-7 1/2" to 20'-1" at 0'-3" Incr.	237	0'-9"	5'-4 3/4"	3'-8" to 3'-10 3/4" at 0'-2" Incr.	5'-4 3/4"	3'-8" to 3'-10 3/4" at 0'-2" Incr.		0'-9"						
*7P23	7	T1	0'-5 5/16"	Stirrups	4	19'-2"	157	0'-9"	5'-4 3/4"	3'-5 1/4"	5'-4 3/4"	3'-5 1/4"		0'-9"						
*7P24	7	T1	0'-5 5/16"	Stirrups	20	20'-9 1/2"	850	0'-9"	5'-4 3/4"	4'-3"	5'-4 3/4"	4'-3"		0'-9"						
*7P25	7	T1	0'-5 5/16"	Stirrups	4	16'-7 1/2"	136	0'-9"	5'-4 3/4"	2'-2"	5'-4 3/4"	2'-2"		0'-9"						
*7P26	7	T1	0'-5 5/16"	Stirrups	4	16'-0 1/2"	131	0'-9"	3'-10 1/4"	3'-5"	3'-10 1/4"	3'-5"		0'-9"						
*7P27	7	T1	0'-5 5/16"	Stirrups	2	13'-11 1/2"	57	0'-9"	4'-3"	1'-11 3/4"	4'-3"	1'-11 3/4"		0'-9"						
*10P28	10	252	0'-10 13/16"	Horiz. top	1	29'-10 1/2"	129	6'-5"	4'-4 1/2"	1'-5 1/2"									3'-8 3/4"	
*10P29	10	103	0'-10 13/16"	Horiz. top	4	16'-10"	290	4'-8"	2'-9"	1'-7"	2'-8 1/4"	5'-1 3/4"			0'-7"					
*10P30	10	103	0'-10 13/16"	Horiz. top	2	22'-11"	197	4'-8"	5'-9 1/2"	1'-7"	5'-8 3/4"	5'-1 3/4"	0'-0 3/4"	0'-1"	0'-7"					
*10P31	10	103	0'-10 13/16"	Horiz. top	2	21'-5"	184	4'-8"	5'-0 1/2"	1'-7"	4'-11 3/4"	5'-1 3/4"			0'-7"					
*10P32	10	17	0'-10 13/16"	Horiz. top	2	14'-2"	122		9'-6"	4'-8"										
*10P33	10	52	0'-10 13/16"	Horiz. top	3	15'-2"	196	10'-6"	4'-8"	0'-1 1/2"	4'-8"									
*10P34	10	55	0'-10 13/16"	Horiz. top	2	15'-2"	131		5'-1 3/4"	5'-4"	4'-6"	1'-6 1/4"								
*10P35	10	55	0'-10 13/16"	Horiz. top	2	15'-4"	132		5'-1 3/4"	5'-6"	4'-6"	1'-6 1/4"								
*10P36	10	247	0'-10 13/16"	Horiz. top	1	16'-3"	70	6'-5"	5'-1 3/4"	4'-8 1/4"	0'-1 1/2"	5'-1 3/4"	4'-5 1/2"	1'-6 1/4"						
*7P37	7	73	0'-5 5/16"	Vert.	4	7'-5 1/2"	61	5'-1 3/4"	2'-3 3/4"	0'-1"	2'-4"									
*7P38	7	983	0'-5 5/16"	Vert.	2	12'-11"	53	5'-1 3/4"	1'-5"	5'-1 3/4"	0'-10"	1'-6 1/2"								
*7P39	7	983	0'-5 5/16"	Vert.	2	12'-3"	50	5'-1 3/4"	0'-9"	5'-1 3/4"	0'-10"	0'-10 1/2"								
*6P40	6	17	0'-4 1/2"	Horiz.	24	10'-9"	388		4'-8"	1'-5"	4'-8"									
*7P41	7	10		Horiz.	12	21'-3 1/2"	522	6'-9"	12'-0 1/2"	2'-6"								7'-8"	3'-10"	
*7P42	7	73	0'-5 5/16"	Vert.	4	7'-0"	57	4'-8"	2'-3 3/4"	0'-1"	2'-4"									
*7P43	7	983	0'-5 5/16"	Vert.	2	11'-11 1/2"	49	4'-8"	1'-5"	4'-8"	0'-10"	1'-6 1/2"								
*7P44	7	983	0'-5 5/16"	Vert.	2	11'-3 1/2"	46	4'-8"	0'-9"	4'-8"	0'-10"	0'-10 1/2"								
*7P45	7	STR		Vert.	10	4'-8"	95		4'-8"											
*7P46	7	STR		Vert.	10	5'-2"	106		5'-2"											
*7P47	7	62	0'-5 5/16"	Long. top	12	3'-0"	74	0'-9"	1'-6 1/2"					0'-9"						
*10P48	10	62	0'-10 13/16"	Horiz.	2	18'-0"	155	2'-0"	12'-10 1/2"					2'-0"						
*10P49	10	62	0'-10 13/16"	Horiz.	2	18'-5 1/2"	159	2'-0"	13'-4 1/4"					2'-0"						
*10P50	10	62	0'-10 13/16"	Horiz.	2	19'-1 1/2"	165	2'-0"	14'-0 1/4"					2'-0"						
*10P51	10	62	0'-10 13/16"	Horiz.	2	19'-6 1/2"	168	2'-0"	14'-5"					2'-0"						
*10P52	10	62	0'-10 13/16"	Horiz.	2	19'-9"	170	2'-0"	14'-7 1/2"					2'-0"						
*10P53	10	62	0'-10 13/16"	Horiz.	2	19'-8 1/2"	170	2'-0"	14'-7 1/4"					2'-0"						
*11P54	11	17	1'-0"	Vert.	2	5'-8 1/2"	61		1'-10"	2'-0 1/2"	1'-10"									
*11P55	11	17	1'-0"	Horiz. bot.	2	8'-1 1/2"	86	2'-0"	4'-1 1/4"					2'-0"						

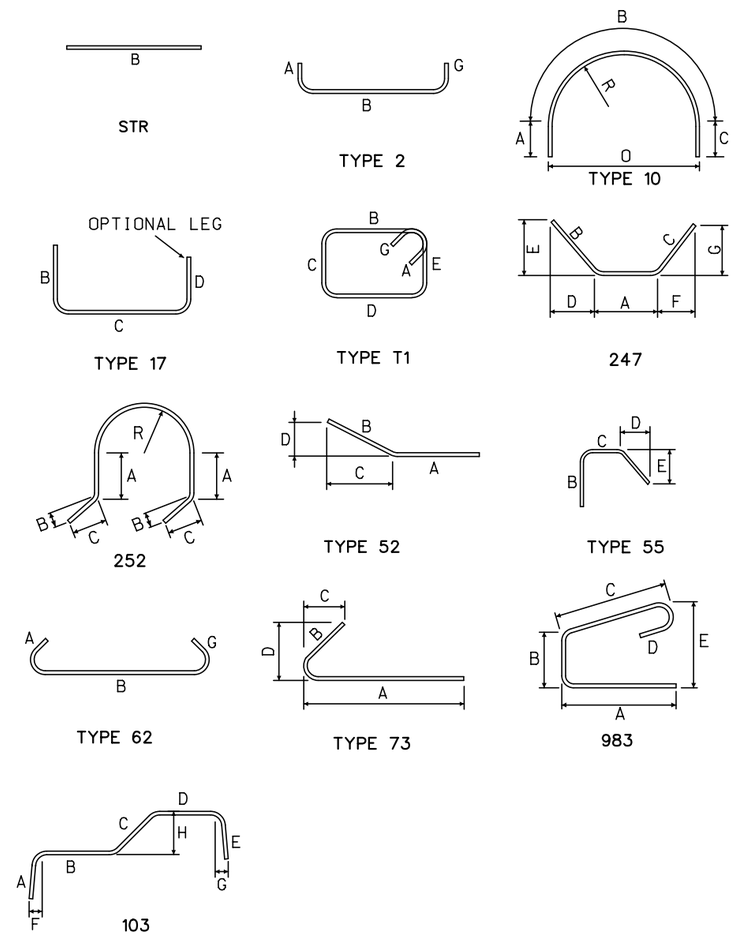

Note: Quantities are for one precast pier segment.

U.S. DEPARTMENT OF TRANSPORTATION
FEDERAL HIGHWAY ADMINISTRATION
EASTERN FEDERAL LANDS HIGHWAY DIVISION

BLUE RIDGE PARKWAY

BRIDGE OVER I-26

PIER SEGMENT PC-1 BAR LIST - 1

NO.	DATE	BY	REVISIONS	NO.	DATE	BY	REVISIONS

DESIGNED BY	DRAWN BY	CHECKED BY	SCALE	PROJECT TEAM LEADER	BRIDGE PLAN SHEET	DATE	BRP NO.
HC	BK	LE	No Scale	George Choubah	26 of 228	December 2018	BRP-1265

ACTUAL FILE:R26_BLRI_I26_PIER SEGMENT PC-1 BAR LIST - 1.dgn
M:\PROJECTS_STATE_DOT\NC\blri_I26_nepa\Bridge\Microstation\Bridge Design Files\0_PROJECTS.dgn
14-Dec-2018 12:17 PM

STATE	PROJECT	SHEET NUMBER
NC	BLRI OVER I-26	R27

REINFORCING STEEL SCHEDULE — DIMENSION TABLE

Pier Segment PC-1 (CONTINUED)

BAR MK	SIZE	TYPE	PIN SZ	LOCATION	QTY	LENGTH	WEIGHT	A	B	C	D	E	F	G	H	J	K	O	R	V or N
*11P56	11	17	1'-0"	Horiz. bot.	2	9'-6"	101	2'-0"	5'-5¾"					2'-0"						
*11P57	11	17	1'-0"	Horiz. bot.	2	10'-0½"	107	2'-0"	6'-0¼"					2'-0"						
*11P58	11	17	1'-0"	Horiz. bot.	2	10'-5½"	111	2'-0"	6'-5½"					2'-0"						
*11P59	11	17	1'-0"	Horiz. bot.	2	10'-10"	115	2'-0"	6'-9¾"					2'-0"						
*11P60	11	17	1'-0"	Horiz. bot.	2	11'-1"	118	2'-0"	7'-1"					2'-0"						
*11P61	11	17	1'-0"	Horiz. bot.	2	11'-4½"	121	2'-0"	7'-4½"					2'-0"						
*11P62	11	17	1'-0"	Horiz. bot.	2	11'-7½"	124	2'-0"	7'-7½"					2'-0"						
*11P63	11	17	1'-0"	Horiz. bot.	28	11'-8"	1736	2'-0"	7'-8"					2'-0"						
				SUBTOTAL			12805 LBS													

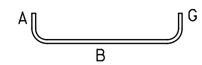

TYPE 2

Note: Quantities are for one precast pier segment.

U.S. DEPARTMENT OF TRANSPORTATION
FEDERAL HIGHWAY ADMINISTRATION
EASTERN FEDERAL LANDS HIGHWAY DIVISION

BLUE RIDGE PARKWAY

BRIDGE OVER I-26

PIER SEGMENT PC-1 BAR LIST - 2

NO.	DATE	BY	REVISIONS	NO.	DATE	BY	REVISIONS

DESIGNED BY	DRAWN BY	CHECKED BY	SCALE	PROJECT TEAM LEADER	BRIDGE PLAN SHEET	DATE	BRP NO.
HC	BK	LE	No Scale	George Choubah	27 of 228	December 2018	BRP-1265

ACTUAL FILE:R27_BLRI_I26_PIER SEGMENT PC-1 BAR LIST - 2.dgn
M:\PROJECTS_STATE_DOT\NC\blri_I26_nepa\Bridge\Microstation\Bridge Design Files\0_OPROJECTS.dgn
14-Dec-2018 12:17 PM

STATE	PROJECT	SHEET NUMBER
NC	BLRI OVER I-26	R28

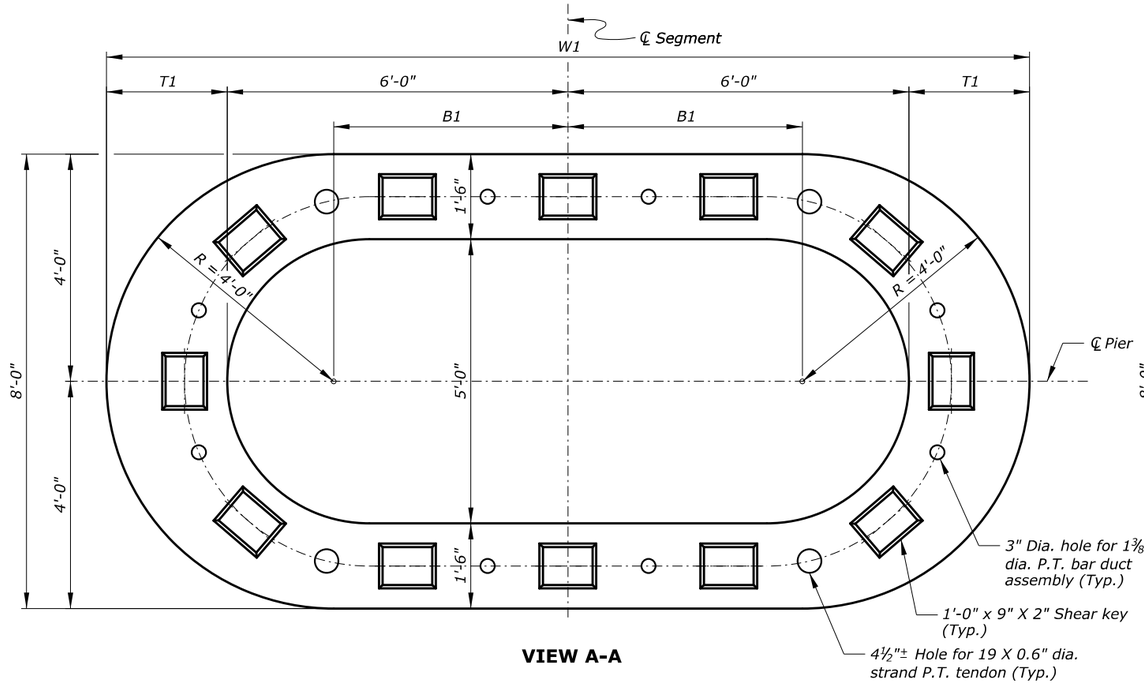

VIEW A-A

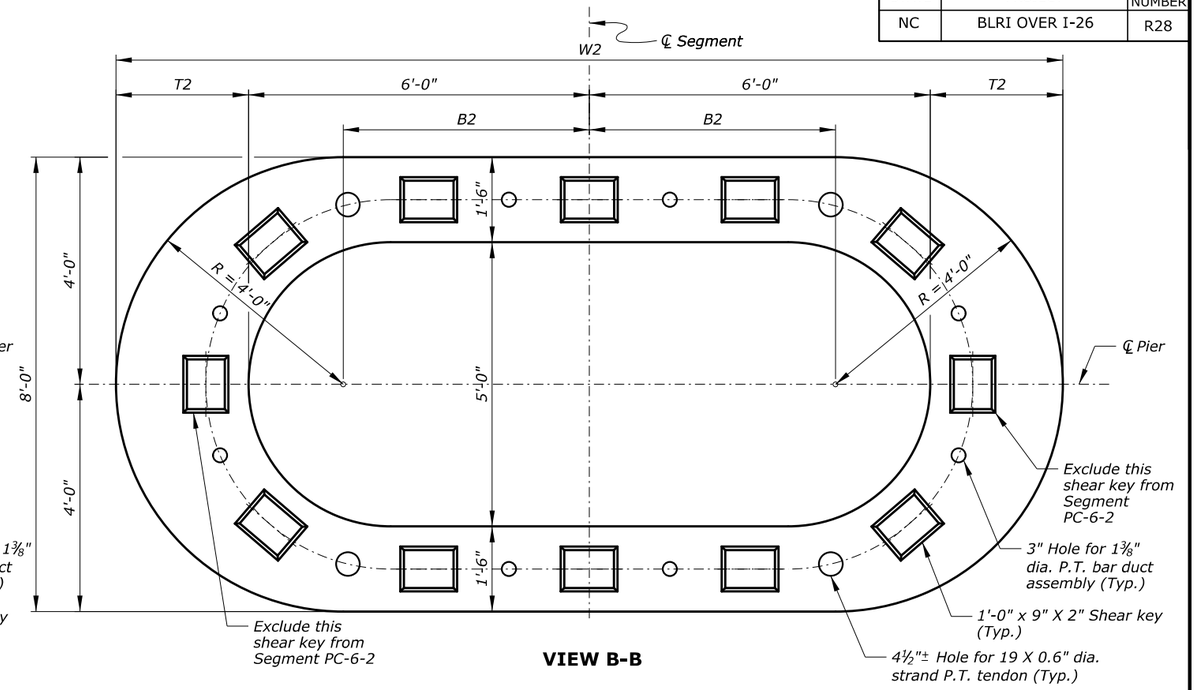

VIEW B-B

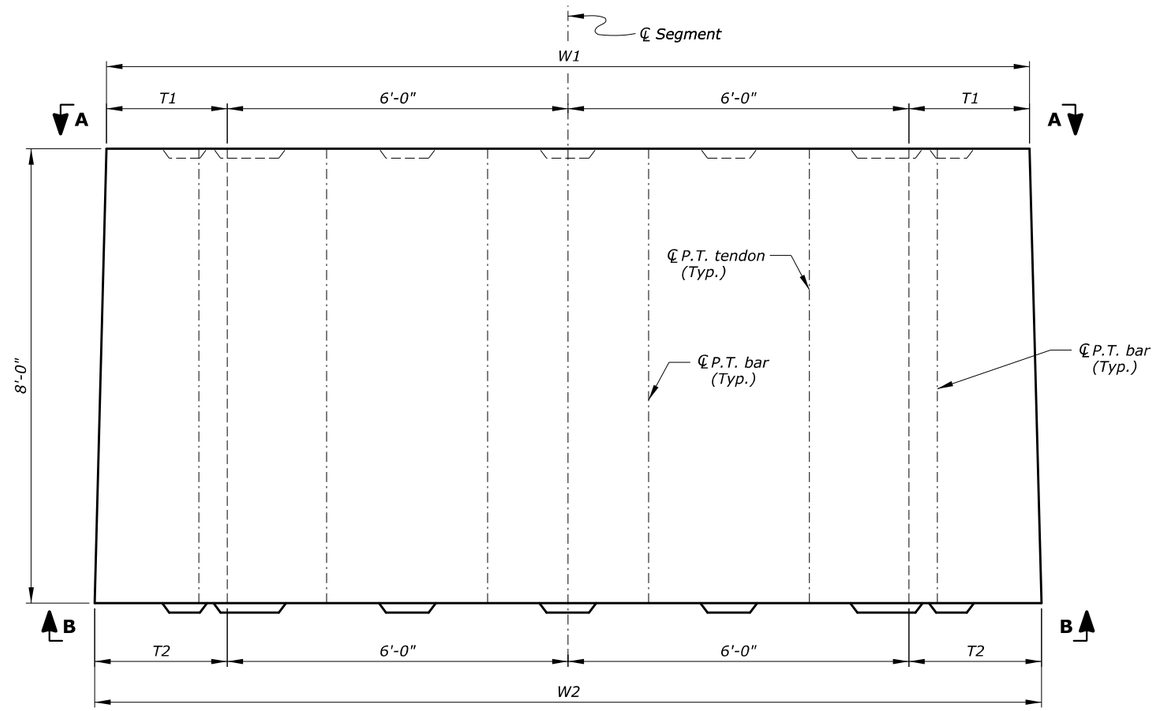

ELEVATION

SEGMENT DIMENSIONS

Segment	W1	W2	T1	T2	B1	B2
PC-2	15'-0"	15'-5"	1'-6"	1'-8½"	3'-6"	3'-8½"
PC-3	15'-5"	15'-10"	1'-8½"	1'-11"	3'-8½"	3'-11"
PC-4	15'-10"	16'-3"	1'-11"	2'-1½"	3'-11"	4'-1½"
PC-5	16'-3"	16'-8"	2'-1½"	2'-4"	4'-1½"	4'-4"
PC-6-2	16'-8"	17'-1"	2'-4"	2'-6½"	4'-4"	4'-6½"

Notes:

1. Locate shear keys centered to holes. For shear key details, see "PIER MISCELLANEOUS DETAILS - 1" sheet.
2. For post-tensioning details, see "PIER MISCELLANEOUS DETAILS - 1" sheet.

***ESTIMATED QUANTITIES**

ITEM	UNIT	SEGMENT				
		PC-2	PC-3	PC-4	PC-5	PC-6-2
Concrete - Class Special (6000 psi)	Cu. Yd.	15.8	16.8	17.8	18.8	19.7
9½" x 5" x 1¾" P.T. Bar Anchor Plate	Each	8	8	8	8	8
1⅜" P.T. Bar Duct Assembly**	Each	8	8	8	8	8
4½"± I.D. Duct (7'-2" long)	Each	4	4	4	4	4
Duct Coupler (4½"± I.D. Duct)	Each	8	8	8	8	8

* Quantities are for one Precast Box Pier Segment
** Duct assembly consists of 4½"± I.D. duct (7'-6" long) with duct adapter

U.S. DEPARTMENT OF TRANSPORTATION
FEDERAL HIGHWAY ADMINISTRATION
EASTERN FEDERAL LANDS HIGHWAY DIVISION

BLUE RIDGE PARKWAY

BRIDGE OVER I-26

PIER SEGMENTS PC-2, PC-3, PC-4, PC-5, & PC-6-2 LAYOUT

NO.	DATE	BY	REVISIONS	NO.	DATE	BY	REVISIONS	DESIGNED BY	DRAWN BY	CHECKED BY	SCALE	PROJECT TEAM LEADER	BRIDGE PLAN SHEET	DATE	BRP NO.
								HC	BK	CWN	¾" = 1'-0"	George Choubah	28 of 228	December 2018	BRP-1265

ACTUAL FILE:R28_BLRI_I26_PIER SEGMENT LAYOUT_PC-2_PC-3_PC-4_PC-5_PC-6-2.DGN
M:\PROJECTS_STATE_DOT\NC\blrl_I26_rep\Bridge\Microstation\Bridge Design Files\0_OPROJECTS.dgn
14-Dec-2018 12:17 PM

STATE	PROJECT	SHEET NUMBER
NC	BLRI OVER I-26	R29

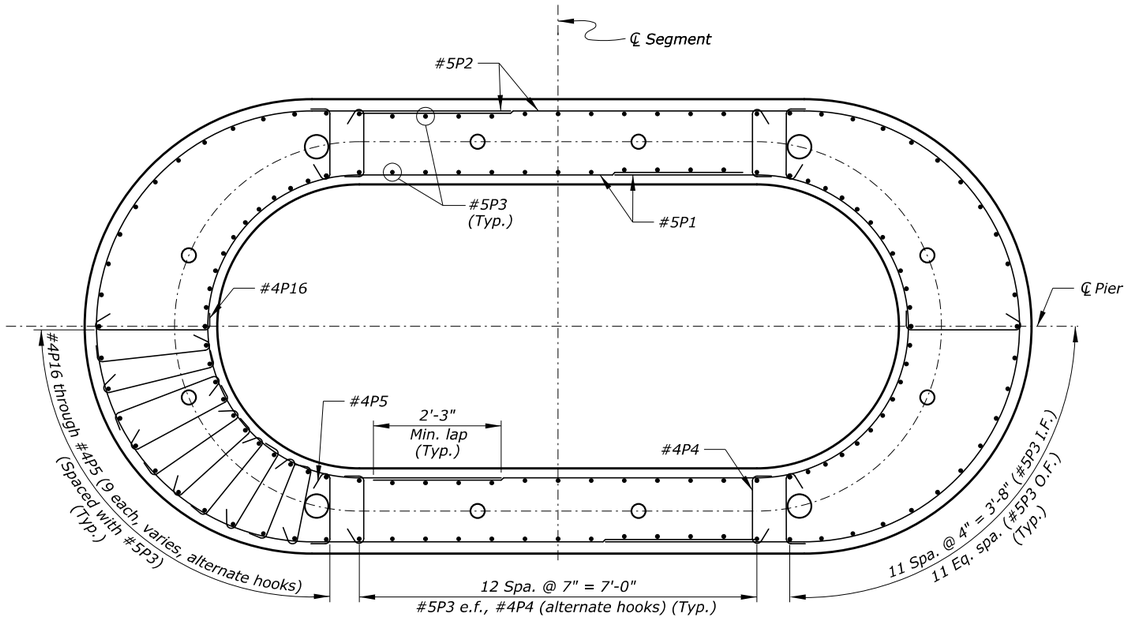

VIEW A-A

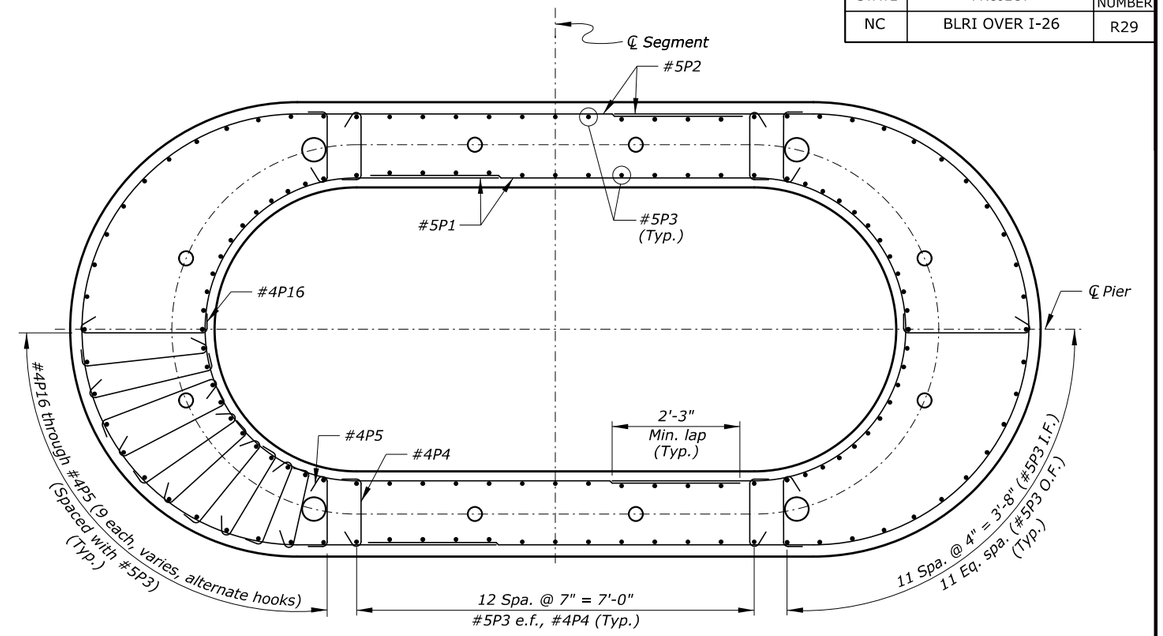

VIEW B-B

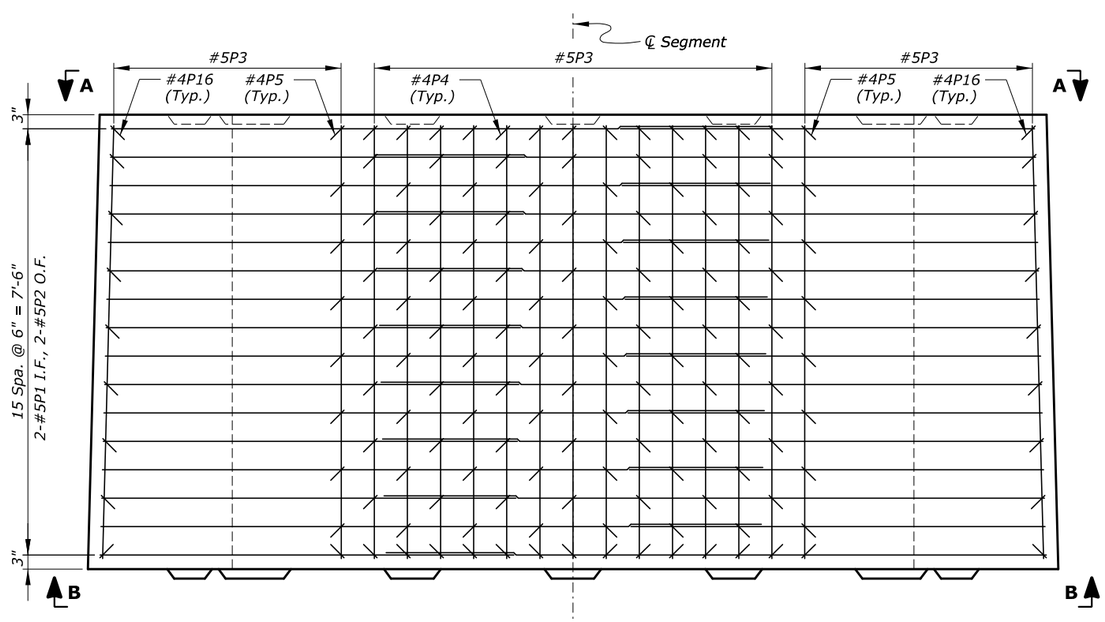

ELEVATION

(#4P6 through #4P15 not shown for clarity)

Notes:

1. *Minimum concrete cover is 1½" inside face and 2" outside face.*
2. *Alternate splices for #5P1 and #5P2 bars so that one splice is not adjacent to the other.*
3. *Space all reinforcement to clear P.T. bars, P.T. tendons, and blockouts.*
4. *Locate #4P4 through #4P16 bars at every bar grid intersection along the top and bottom layers of reinforcement and at alternate bar grid intersections between top and bottom layers.*

Key:

e.f. = each face
I.F. = inside face
O.F. = outside face

U.S. DEPARTMENT OF TRANSPORTATION
FEDERAL HIGHWAY ADMINISTRATION
EASTERN FEDERAL LANDS HIGHWAY DIVISION

BLUE RIDGE PARKWAY

BRIDGE OVER I-26

PIER SEGMENTS PC-2, PC-3, PC-4, PC-5, & PC-6-2 REINFORCEMENT

NO.	DATE	BY	REVISIONS	NO.	DATE	BY	REVISIONS

DESIGNED BY	DRAWN BY	CHECKED BY	SCALE	PROJECT TEAM LEADER	BRIDGE PLAN SHEET	DATE	BRP NO.
HC	BK	CWN	¾" = 1'-0"	George Choubah	29 of 228	December 2018	BRP-1265

M:\PROJECTS_STATE_DOT\NC\blri_I26_nepo\Bridge\Microstation\Bridge Design Files\0_OPROJECTS.dgn
ACTUAL FILE:R29_BLRI_I26_PIER SEGMENT REINF_PC2_PC-3_PC-4_PC-5_PC-6-2.DGN
14-Dec-2018 12:17 PM

STATE	PROJECT	SHEET NUMBER
NC	BLRI OVER I-26	R30

REINFORCING STEEL SCHEDULE — DIMENSION TABLE

PIER SEGMENT PC-2 BAR LIST

BAR MK	SIZE	TYPE	PIN SZ	LOCATION	QTY	LENGTH	WEIGHT	A	B	C	D	E	F	G	H	J	K	O	R	V or N
*5P1	5	10		Horiz.	32	17′-8″	590	6′-9″	8′-5″	2′-6″								5′-4¼″	2′-8¼″	
*5P2	5	10		Horiz.	32	21′-8½″	725	7′-0″	12′-0½″	2′-8″								7′-8″	3′-10″	
*5P3	5	STR		Vert. e.f.	144	7′-6″	1126		7′-6″											
*4P4	4	T9	0′-1 15/16″	Stirrups	234	1′-11½″	306	0′-4½″	1′-2½″					0′-4½″						
*4P5	4	T9	0′-1 15/16″	Stirrups	4 sets of 9	1′-11½″ to 2′-0″ at 0′-0″ Incr.	90	0′-4½″	1′-2½″ to 1′-2¾″ at 0′-0″ Incr.					0′-4½″						
*4P6	4	T9	0′-1 15/16″	Stirrups	4 sets of 9	1′-11½″ to 2′-0″ at 0′-0″ Incr.	46	0′-4½″	1′-2½″ to 1′-3¼″ at 0′-0″ Incr.					0′-4½″						
*4P7	4	T9	0′-1 15/16″	Stirrups	4 sets of 9	1′-11½″ to 2′-0½″ at 0′-0″ Incr.	46	0′-4½″	1′-2½″ to 1′-3½″ at 0′-0″ Incr.					0′-4½″						
*4P8	4	T9	0′-1 15/16″	Stirrups	4 sets of 9	1′-11½″ to 2′-1″ at 0′-0″ Incr.	46	0′-4½″	1′-2½″ to 1′-3¾″ at 0′-0″ Incr.					0′-4½″						
*4P9	4	T9	0′-1 15/16″	Stirrups	4 sets of 9	1′-11½″ to 2′-1″ at 0′-0″ Incr.	46	0′-4½″	1′-2½″ to 1′-4″ at 0′-0″ Incr.					0′-4½″						
*4P10	4	T9	0′-1 15/16″	Stirrups	4 sets of 9	1′-11½″ to 2′-1½″ at 0′-0″ Incr.	47	0′-4½″	1′-2½″ to 1′-4¼″ at 0′-0″ Incr.					0′-4½″						
*4P11	4	T9	0′-1 15/16″	Stirrups	4 sets of 9	1′-11½″ to 2′-1½″ at 0′-0″ Incr.	47	0′-4½″	1′-2½″ to 1′-4½″ at 0′-0″ Incr.					0′-4½″						
*4P12	4	T9	0′-1 15/16″	Stirrups	4 sets of 9	1′-11½″ to 2′-2″ at 0′-0″ Incr.	47	0′-4½″	1′-2½″ to 1′-4¾″ at 0′-0″ Incr.					0′-4½″						
*4P13	4	T9	0′-1 15/16″	Stirrups	4 sets of 9	2′-0″ to 2′-2″ at 0′-0″ Incr.	47	0′-4½″	1′-2¾″ to 1′-4¾″ at 0′-0″ Incr.					0′-4½″						
*4P14	4	T9	0′-1 15/16″	Stirrups	4 sets of 9	2′-0″ to 2′-2″ at 0′-0″ Incr.	47	0′-4½″	1′-2¾″ to 1′-4¾″ at 0′-0″ Incr.					0′-4½″						
*4P15	4	T9	0′-1 15/16″	Stirrups	4 sets of 9	2′-0″ to 2′-2″ at 0′-0″ Incr.	48	0′-4½″	1′-2¾″ to 1′-5″ at 0′-0″ Incr.					0′-4½″						

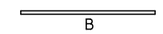

STR

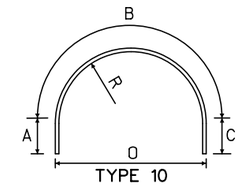

TYPE 10

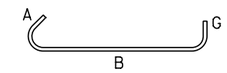

TYPE T9

Note: Quantities are for one precast pier segment.

U.S. DEPARTMENT OF TRANSPORTATION
FEDERAL HIGHWAY ADMINISTRATION
EASTERN FEDERAL LANDS HIGHWAY DIVISION

BLUE RIDGE PARKWAY

BRIDGE OVER I-26

PIER SEGMENTS PC-2, PC-3, PC-4, PC-5, & PC-6-2 BAR LIST - 1

NO.	DATE	BY	REVISIONS	NO.	DATE	BY	REVISIONS

DESIGNED BY	DRAWN BY	CHECKED BY	SCALE	PROJECT TEAM LEADER	BRIDGE PLAN SHEET	DATE	BRP NO.
HC	LE	LE	No Scale	George Choubah	30 of 228	December 2018	BRP-1265

ACTUAL FILE:R30_BLRI_I26_PIER SEGMENT PC-2 TO PC-6-2 BAR LIST - 1.dgn
M:\PROJECTS_STATE_DOT\NC\blri_I26_nepa\Bridge\Microstation\Bridge Design Files\0_OPROJECTS.dgn
14-Dec-2018 12:17 PM

STATE	PROJECT	SHEET NUMBER
NC	BLRI OVER I-26	R31

REINFORCING STEEL SCHEDULE — DIMENSION TABLE

PIER SEGMENT PC-2 BAR LIST (CONTINUED)

BAR MK	SIZE	TYPE	PIN SZ	LOCATION	QTY	LENGTH	WEIGHT	A	B	C	D	E	F	G	H	J	K	O	R	V or N
*4P16	4	T9	0′-1 15/16″	*Stirrups	2 sets of 9	2′-0″ to 2′-2″ at 0′-0″ Incr.	24	0′-4 1/2″	1′-2 3/4″ to 1′-5″ at 0′-0″ Incr.					0′-4 1/2″						
				SUBTOTAL			3359 LBS													

PIER SEGMENT PC-3 BAR LIST

BAR MK	SIZE	TYPE	PIN SZ	LOCATION	QTY	LENGTH	WEIGHT	A	B	C	D	E	F	G	H	J	K	O	R	V or N
*5P1	5	10		Horiz.	32	17′-8″	590	6′-9″	8′-5″	2′-6″								5′-4 1/4″	2′-8 1/4″	
*5P2	5	10		Horiz.	32	22′-1 1/2″	738	7′-2 1/2″	12′-0 1/2″	2′-10 1/2″								7′-8″	3′-10″	
*5P3	5	STR		Vert.	144	7′-6″	1126		7′-6″											
*4P4	4	T9	0′-1 15/16″	*Stirrups	234	1′-11 1/2″	306	0′-4 1/2″	1′-2 1/2″					0′-4 1/2″						
*4P5	4	T9	0′-1 15/16″	*Stirrups	4 sets of 9	2′-0″ to 2′-0″ at 0′-0″ Incr.	46	0′-4 1/2″	1′-3″ to 1′-2 3/4″ at 0′-0″ Incr.					0′-4 1/2″						
*4P6	4	T9	0′-1 15/16″	*Stirrups	4 sets of 9	2′-0″ to 2′-1″ at 0′-0″ Incr.	47	0′-4 1/2″	1′-3 1/4″ to 1′-3 3/4″ at 0′-0″ Incr.					0′-4 1/2″						
*4P7	4	T9	0′-1 15/16″	*Stirrups	4 sets of 9	2′-0 1/2″ to 2′-1 1/2″ at 0′-0″ Incr.	48	0′-4 1/2″	1′-3 1/2″ to 1′-4 1/4″ at 0′-0″ Incr.					0′-4 1/2″						
*4P8	4	T9	0′-1 15/16″	*Stirrups	4 sets of 9	2′-1″ to 2′-2″ at 0′-0″ Incr.	49	0′-4 1/2″	1′-3 3/4″ to 1′-5″ at 0′-0″ Incr.					0′-4 1/2″						
*4P9	4	T9	0′-1 15/16″	*Stirrups	4 sets of 9	2′-1″ to 2′-2 1/2″ at 0′-0″ Incr.	49	0′-4 1/2″	1′-4″ to 1′-5 1/2″ at 0′-0″ Incr.					0′-4 1/2″						
*4P10	4	T9	0′-1 15/16″	*Stirrups	4 sets of 9	2′-1 1/2″ to 2′-3″ at 0′-0″ Incr.	50	0′-4 1/2″	1′-4 1/4″ to 1′-6″ at 0′-0″ Incr.					0′-4 1/2″						
*4P11	4	T9	0′-1 15/16″	*Stirrups	4 sets of 9	2′-1 1/2″ to 2′-3 1/2″ at 0′-0″ Incr.	51	0′-4 1/2″	1′-4 1/2″ to 1′-6 1/4″ at 0′-0″ Incr.					0′-4 1/2″						
*4P12	4	T9	0′-1 15/16″	*Stirrups	4 sets of 9	2′-2″ to 2′-4″ at 0′-0″ Incr.	51	0′-4 1/2″	1′-4 3/4″ to 1′-6 3/4″ at 0′-0″ Incr.					0′-4 1/2″						
*4P13	4	T9	0′-1 15/16″	*Stirrups	4 sets of 9	2′-2″ to 2′-4″ at 0′-0″ Incr.	52	0′-4 1/2″	1′-5″ to 1′-7″ at 0′-0″ Incr.					0′-4 1/2″						

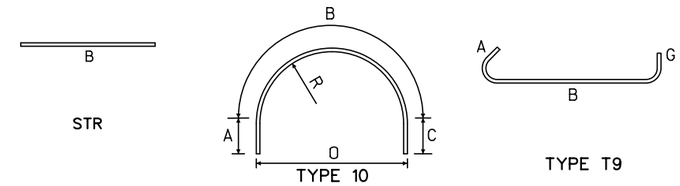

Note: Quantities are for one precast pier segment.

U.S. DEPARTMENT OF TRANSPORTATION
FEDERAL HIGHWAY ADMINISTRATION
EASTERN FEDERAL LANDS HIGHWAY DIVISION

BLUE RIDGE PARKWAY

BRIDGE OVER I-26

PIER SEGMENTS PC-2, PC-3, PC-4, PC-5, & PC-6-2 BAR LIST - 2

NO.	DATE	BY	REVISIONS	NO.	DATE	BY	REVISIONS

DESIGNED BY	DRAWN BY	CHECKED BY	SCALE	PROJECT TEAM LEADER	BRIDGE PLAN SHEET	DATE	BRP NO.
HC	LE	LE	No Scale	George Choubah	31 of 228	December 2018	BRP-1265

ACTUAL FILE:R31_BLRI_I26_PIER SEGMENT PC-2 TO PC-6-2 BAR LIST - 2.dgn
M:\PROJECTS_STATE_DOT\NC\blri_I26_nepa\Bridge\Microstation\Bridge Design Files\0_OPROJECTS.dgn
14-Dec-2018 12:17 PM

STATE	PROJECT	SHEET NUMBER
NC	BLRI OVER I-26	R32

REINFORCING STEEL SCHEDULE — DIMENSION TABLE

PIER SEGMENT PC-3 BAR LIST (CONTINUED)

BAR MK	SIZE	TYPE	PIN SZ	LOCATION	QTY	LENGTH	WEIGHT	A	B	C	D	E	F	G	H	J	K	O	R	V or N
*4P14	4	T9	0′-1 15/16″	*Stirrups	4 sets of 9	2′-2″ to 2′-4 1/2″ at 0′-0″ Incr.	52	0′-4 1/2″	1′-5″ to 1′-7 1/4″ at 0′-0″ Incr.					0′-4 1/2″						
*4P15	4	T9	0′-1 15/16″	*Stirrups	4 sets of 9	2′-2″ to 2′-4 1/2″ at 0′-0″ Incr.	52	0′-4 1/2″	1′-5″ to 1′-7 1/4″ at 0′-0″ Incr.					0′-4 1/2″						
*4P16	4	T9	0′-1 15/16″	*Stirrups	2 sets of 9	2′-2 1/2″ to 2′-4 1/2″ at 0′-0″ Incr.	26	0′-4 1/2″	1′-5 1/4″ to 1′-7 1/4″ at 0′-0″ Incr.					0′-4 1/2″						
				SUBTOTAL			3362 LBS													

PIER SEGMENT PC-4 BAR LIST

BAR MK	SIZE	TYPE	PIN SZ	LOCATION	QTY	LENGTH	WEIGHT	A	B	C	D	E	F	G	H	J	K	O	R	V or N
*5P1	5	10		Horiz.	32	17′-8″	590	6′-9″	8′-5″	2′-6″								5′-4 1/4″	2′-8 1/4″	
*5P2	5	10		Horiz.	32	22′-6 1/2″	752	7′-5″	12′-0 1/2″	3′-1″								7′-8″	3′-10″	
*5P3	5	STR		Vert. e.f.	144	7′-6″	1126		7′-6″											
*4P4	4	T9	0′-1 15/16″	*Stirrups	234	1′-11 1/2″	306	0′-4 1/2″	1′-2 1/2″					0′-4 1/2″						
*4P5	4	T9	0′-1 15/16″	*Stirrups	4 sets of 9	2′-0″ to 2′-0 1/2″ at 0′-0″ Incr.	46	0′-4 1/2″	1′-3″ to 1′-3 1/2″ at 0′-0″ Incr.					0′-4 1/2″						
*4P6	4	T9	0′-1 15/16″	*Stirrups	4 sets of 9	2′-1″ to 2′-1 1/2″ at 0′-0″ Incr.	48	0′-4 1/2″	1′-3 3/4″ to 1′-4 1/2″ at 0′-0″ Incr.					0′-4 1/2″						
*4P7	4	T9	0′-1 15/16″	*Stirrups	4 sets of 9	2′-1 1/2″ to 2′-2 1/2″ at 0′-0″ Incr.	49	0′-4 1/2″	1′-4 1/4″ to 1′-5 1/4″ at 0′-0″ Incr.					0′-4 1/2″						
*4P8	4	T9	0′-1 15/16″	*Stirrups	4 sets of 9	2′-2″ to 2′-3 1/2″ at 0′-0″ Incr.	51	0′-4 1/2″	1′-5″ to 1′-6 1/4″ at 0′-0″ Incr.					0′-4 1/2″						
*4P9	4	T9	0′-1 15/16″	*Stirrups	4 sets of 9	2′-2 1/2″ to 2′-4″ at 0′-0″ Incr.	52	0′-4 1/2″	1′-5 1/2″ to 1′-7″ at 0′-0″ Incr.					0′-4 1/2″						
*4P10	4	T9	0′-1 15/16″	*Stirrups	4 sets of 9	2′-3″ to 2′-4 1/2″ at 0′-0″ Incr.	53	0′-4 1/2″	1′-6″ to 1′-7 1/4″ at 0′-0″ Incr.					0′-4 1/2″						
*4P11	4	T9	0′-1 15/16″	*Stirrups	4 sets of 9	2′-3 1/2″ to 2′-5 1/2″ at 0′-0″ Incr.	55	0′-4 1/2″	1′-6 1/2″ to 1′-8 1/4″ at 0′-0″ Incr.					0′-4 1/2″						

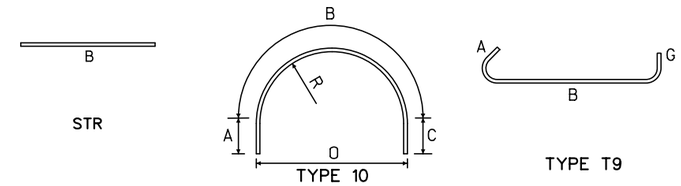

Note: Quantities are for one precast pier segment.

U.S. DEPARTMENT OF TRANSPORTATION
FEDERAL HIGHWAY ADMINISTRATION
EASTERN FEDERAL LANDS HIGHWAY DIVISION

BLUE RIDGE PARKWAY

BRIDGE OVER I-26

PIER SEGMENTS PC-2, PC-3, PC-4, PC-5, & PC-6-2 BAR LIST - 3

NO.	DATE	BY	REVISIONS	NO.	DATE	BY	REVISIONS

DESIGNED BY	DRAWN BY	CHECKED BY	SCALE	PROJECT TEAM LEADER	BRIDGE PLAN SHEET	DATE	BRP NO.
HC	LE	LE	No Scale	George Choubah	32 of 228	December 2018	BRP-1265

ACTUAL FILE:R32_BLRI_I26_PIER SEGMENT PC-2 TO PC-6-2 BAR LIST - 3.dgn
M:\PROJECTS_STATE_DOT\NC\blri_I26_nepa\Bridge\Microstation\Bridge Design Files\0_OPROJECTS.dgn
14-Dec-2018 12:17 PM

STATE	PROJECT	SHEET NUMBER
NC	BLRI OVER I-26	R33

REINFORCING STEEL SCHEDULE — DIMENSION TABLE

PIER SEGMENT PC-4 BAR LIST (CONTINUED)

BAR MK	SIZE	TYPE	PIN SZ	LOCATION	QTY	LENGTH	WEIGHT	A	B	C	D	E	F	G	H	J	K	O	R	V or N
*4P12	4	T9	0′-1 15/16″	*Stirrups	4 sets of 9	2′-4″ to 2′-6″ at 0′-0″ Incr.	56	0′-4 1/2″	1′-6 3/4″ to 1′-9″ at 0′-0″ Incr.					0′-4 1/2″						
*4P13	4	T9	0′-1 15/16″	*Stirrups	4 sets of 9	2′-4 1/2″ to 2′-6 1/2″ at 0′-0″ Incr.	57	0′-4 1/2″	1′-7 1/4″ to 1′-9 1/2″ at 0′-0″ Incr.					0′-4 1/2″						
*4P14	4	T9	0′-1 15/16″	*Stirrups	4 sets of 9	2′-4 1/2″ to 2′-7″ at 0′-0″ Incr.	57	0′-4 1/2″	1′-7 1/4″ to 1′-9 3/4″ at 0′-0″ Incr.					0′-4 1/2″						
*4P15	4	T9	0′-1 15/16″	*Stirrups	4 sets of 9	2′-4 1/2″ to 2′-7″ at 0′-0″ Incr.	57	0′-4 1/2″	1′-7 1/2″ to 1′-10″ at 0′-0″ Incr.					0′-4 1/2″						
*4P16	4	T9	0′-1 15/16″	*Stirrups	2 sets of 9	2′-4 1/2″ to 2′-7″ at 0′-0″ Incr.		0′-4 1/2″	1′-7 1/2″ to 1′-10″ at 0′-0″ Incr.					0′-4 1/2″						
				SUBTOTAL			3414 LBS													

PIER SEGMENT PC-5 BAR LIST

BAR MK	SIZE	TYPE	PIN SZ	LOCATION	QTY	LENGTH	WEIGHT	A	B	C	D	E	F	G	H	J	K	O	R	V or N
*5P1	5	10		Horiz.	32	17′-8″	590	6′-9″	8′-5″	2′-6″								5′-4 1/4″	2′-8 1/4″	
*5P2	5	10		Horiz.	32	22′-11 1/2″	766	7′-7 1/2″	12′-0 1/2″	3′-3 1/2″								7′-8″	3′-10″	
*5P3	5	STR		Vert. e.f.	144	7′-6″	1126		7′-6″											
*4P4	4	T9	0′-1 15/16″	*Stirrups	234	1′-11 1/2″	306	0′-4 1/2″	1′-2 1/2″					0′-4 1/2″						
*4P5	4	T9	0′-1 15/16″	*Stirrups	4 sets of 9	2′-0″ to 2′-0″ at 0′-0″ Incr.	46	0′-4 1/2″	1′-2 3/4″ to 1′-3″ at 0′-0″ Incr.					0′-4 1/2″						
*4P6	4	T9	0′-1 15/16″	*Stirrups	4 sets of 9	2′-1 1/2″ to 2′-1 1/2″ at 0′-0″ Incr.	49	0′-4 1/2″	1′-4 1/4″ to 1′-4 1/2″ at 0′-0″ Incr.					0′-4 1/2″						
*4P7	4	T9	0′-1 15/16″	*Stirrups	4 sets of 9	2′-2 1/2″ to 2′-3″ at 0′-0″ Incr.	51	0′-4 1/2″	1′-5 1/4″ to 1′-6″ at 0′-0″ Incr.					0′-4 1/2″						
*4P8	4	T9	0′-1 15/16″	*Stirrups	4 sets of 9	2′-3 1/2″ to 2′-4″ at 0′-0″ Incr.	53	0′-4 1/2″	1′-6 1/4″ to 1′-7″ at 0′-0″ Incr.					0′-4 1/2″						
*4P9	4	T9	0′-1 15/16″	*Stirrups	4 sets of 9	2′-4″ to 2′-5 1/2″ at 0′-0″ Incr.	55	0′-4 1/2″	1′-7″ to 1′-8 1/4″ at 0′-0″ Incr.					0′-4 1/2″						

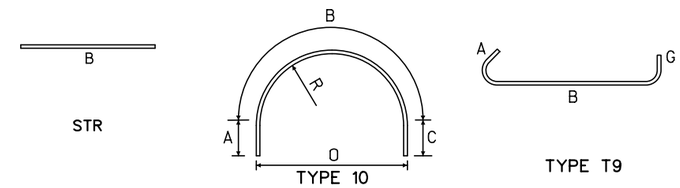

Note: Quantities are for one precast pier segment.

U.S. DEPARTMENT OF TRANSPORTATION
FEDERAL HIGHWAY ADMINISTRATION
EASTERN FEDERAL LANDS HIGHWAY DIVISION

BLUE RIDGE PARKWAY

BRIDGE OVER I-26

PIER SEGMENTS PC-2, PC-3, PC-4, PC-5, & PC-6-2 BAR LIST - 4

NO.	DATE	BY	REVISIONS	NO.	DATE	BY	REVISIONS

DESIGNED BY	DRAWN BY	CHECKED BY	SCALE	PROJECT TEAM LEADER	BRIDGE PLAN SHEET	DATE	BRP NO.
HC	LE	LE	No Scale	George Choubah	33 of 228	December 2018	BRP-1265

ACTUAL FILE:R33_BLRI_I26_PIER SEGMENT PC-2 TO PC-6-2 BAR LIST - 4.dgn
M:\PROJECTS_STATE_DOT\NC\blri_I26_nepa\BridgeWlcrostation\Bridge Design Files\0_OPROJECTS.dgn
14-Dec-2018 12:17 PM

STATE	PROJECT	SHEET NUMBER
NC	BLRI OVER I-26	R34

REINFORCING STEEL SCHEDULE — DIMENSION TABLE

PIER SEGMENT PC-5 BAR LIST (CONTINUED)

BAR MK	SIZE	TYPE	PIN SZ	LOCATION	QTY	LENGTH	WEIGHT	A	B	C	D	E	F	G	H	J	K	O	R	V or N
*4P10	4	T9	0'-1 15/16"	*Stirrups	4 sets of 9	2'-5" to 2'-6 1/2" at 0'-0" Incr.	57	0'-4 1/2"	1'-7 3/4" to 1'-9 1/4" at 0'-0" Incr.					0'-4 1/2"						
*4P11	4	T9	0'-1 15/16"	*Stirrups	4 sets of 9	2'-5 1/2" to 2'-7 1/2" at 0'-0" Incr.	59	0'-4 1/2"	1'-8 1/2" to 1'-10 1/4" at 0'-0" Incr.					0'-4 1/2"						
*4P12	4	T9	0'-1 15/16"	*Stirrups	4 sets of 9	2'-6" to 2'-8" at 0'-0" Incr.	60	0'-4 1/2"	1'-9" to 1'-11" at 0'-0" Incr.					0'-4 1/2"						
*4P13	4	T9	0'-1 15/16"	*Stirrups	4 sets of 9	2'-6 1/2" to 2'-9" at 0'-0" Incr.	61	0'-4 1/2"	1'-9 1/2" to 1'-11 3/4" at 0'-0" Incr.					0'-4 1/2"						
*4P14	4	T9	0'-1 15/16"	*Stirrups	4 sets of 9	2'-7" to 2'-9" at 0'-0" Incr.	62	0'-4 1/2"	1'-9 3/4" to 2'-0" at 0'-0" Incr.					0'-4 1/2"						
*4P15	4	T9	0'-1 15/16"	*Stirrups	4 sets of 9	2'-7" to 2'-9 1/2" at 0'-0" Incr.	62	0'-4 1/2"	1'-10" to 2'-0 1/4" at 0'-0" Incr.					0'-4 1/2"						
*4P16	4	T9	0'-1 15/16"	*Stirrups	2 sets of 9	2'-7" to 2'-9 1/2" at 0'-0" Incr.	31	0'-4 1/2"	1'-10" to 2'-0 1/2" at 0'-0" Incr.					0'-4 1/2"						
				SUBTOTAL			3462 LBS													

PIER SEGMENT PC-6-2 BAR LIST

BAR MK	SIZE	TYPE	PIN SZ	LOCATION	QTY	LENGTH	WEIGHT	A	B	C	D	E	F	G	H	J	K	O	R	V or N
*5P1	5	10		Horiz.	32	17'-8"	590	6'-9"	8'-5"	2'-6"								5'-4 1/4"	2'-8 1/4"	
*5P2	5	10		Horiz.	32	23'-4 1/2"	780	7'-10"	12'-0 1/2"	3'-6"								7'-8"	3'-10"	
*5P3	5	STR		Vert. e.f.	144	7'-6"	1126		7'-6"											
*4P4	4	T9	0'-1 15/16"	*Stirrups	234	1'-11 1/2"	306	0'-4 1/2"	1'-2 1/2"					0'-4 1/2"						
*4P5	4	T9	0'-1 15/16"	*Stirrups	36	2'-0"	48	0'-4 1/2"	1'-3"					0'-4 1/2"						
*4P6	4	T9	0'-1 15/16"	*Stirrups	4 sets of 9	2'-1 1/2" to 2'-2" at 0'-0" Incr.	49	0'-4 1/2"	1'-4 1/2" to 1'-4 3/4" at 0'-0" Incr.					0'-4 1/2"						
*4P7	4	T9	0'-1 15/16"	*Stirrups	4 sets of 9	2'-3" to 2'-3 1/2" at 0'-0" Incr.	52	0'-4 1/2"	1'-5 3/4" to 1'-6 1/4" at 0'-0" Incr.					0'-4 1/2"						
*4P8	4	T9	0'-1 15/16"	*Stirrups	4 sets of 9	2'-4" to 2'-5" at 0'-0" Incr.	55	0'-4 1/2"	1'-7" to 1'-7 3/4" at 0'-0" Incr.					0'-4 1/2"						

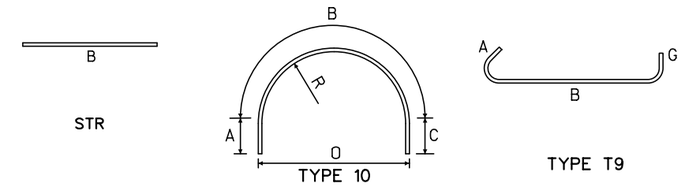

Note: Quantities are for one precast pier segment.

U.S. DEPARTMENT OF TRANSPORTATION
FEDERAL HIGHWAY ADMINISTRATION
EASTERN FEDERAL LANDS HIGHWAY DIVISION

BLUE RIDGE PARKWAY

BRIDGE OVER I-26

PIER SEGMENTS PC-2, PC-3, PC-4, PC-5, & PC-6-2 BAR LIST - 5

NO.	DATE	BY	REVISIONS	NO.	DATE	BY	REVISIONS

DESIGNED BY	DRAWN BY	CHECKED BY	SCALE	PROJECT TEAM LEADER	BRIDGE PLAN SHEET	DATE	BRP NO.
HC	LE	LE	No Scale	George Choubah	34 of 228	December 2018	BRP-1265

ACTUAL FILE:R34_BLRI_I26_PIER SEGMENT PC-2 TO PC-6-2 BAR LIST - 5.dgn
M:\PROJECTS_STATE_DOT\NC\blri_I26_nepa\Bridge\Microstation\Bridge Design Files\0_OPROJECTS.dgn
14-Dec-2018 12:17 PM

STATE	PROJECT	SHEET NUMBER
NC	BLRI OVER I-26	R35

REINFORCING STEEL SCHEDULE — DIMENSION TABLE

PIER SEGMENT PC-6-2 BAR LIST (CONTINUED)

BAR MK	SIZE	TYPE	PIN SZ	LOCATION	QTY	LENGTH	WEIGHT	A	B	C	D	E	F	G	H	J	K	O	R	V or N
*4P9	4	T9	0′-1 15/16″	*Stirrups	4 sets of 9	2′-5″ to 2′-6″ at 0′-0″ Incr.	57	0′-4 1/2″	1′-8″ to 1′-9″ at 0′-0″ Incr.					0′-4 1/2″						
*4P10	4	T9	0′-1 15/16″	*Stirrups	4 sets of 9	2′-6″ to 2′-7 1/2″ at 0′-0″ Incr.	59	0′-4 1/2″	1′-9″ to 1′-10 1/2″ at 0′-0″ Incr.					0′-4 1/2″						
*4P11	4	T9	0′-1 15/16″	*Stirrups	4 sets of 9	2′-7″ to 2′-9″ at 0′-0″ Incr.	62	0′-4 1/2″	1′-10″ to 1′-11 3/4″ at 0′-0″ Incr.					0′-4 1/2″						
*4P12	4	T9	0′-1 15/16″	*Stirrups	4 sets of 9	2′-8″ to 2′-10″ at 0′-0″ Incr.	64	0′-4 1/2″	1′-11″ to 2′-1″ at 0′-0″ Incr.					0′-4 1/2″						
*4P13	4	T9	0′-1 15/16″	*Stirrups	4 sets of 9	2′-9″ to 2′-11″ at 0′-0″ Incr.	66	0′-4 1/2″	2′-0″ to 2′-2″ at 0′-0″ Incr.					0′-4 1/2″						
*4P14	4	T9	0′-1 15/16″	*Stirrups	4 sets of 9	2′-9 1/2″ to 2′-11 1/2″ at 0′-0″ Incr.	67	0′-4 1/2″	2′-0 1/4″ to 2′-2 1/2″ at 0′-0″ Incr.					0′-4 1/2″						
*4P15	4	T9	0′-1 15/16″	*Stirrups	4 sets of 9	2′-9 1/2″ to 3′-0″ at 0′-0″ Incr.	67	0′-4 1/2″	2′-0 1/2″ to 2′-2 3/4″ at 0′-0″ Incr.					0′-4 1/2″						
*4P16	4	T9	0′-1 15/16″	*Stirrups	2 sets of 9	2′-10″ to 3′-0″ at 0′-0″ Incr.	34	0′-4 1/2″	2′-0 3/4″ to 2′-2 3/4″ at 0′-0″ Incr.					0′-4 1/2″						
				SUBTOTAL			3507 LBS													

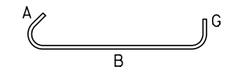

TYPE T9

Note: Quantities are for one precast pier segment.

U.S. DEPARTMENT OF TRANSPORTATION
FEDERAL HIGHWAY ADMINISTRATION
EASTERN FEDERAL LANDS HIGHWAY DIVISION

BLUE RIDGE PARKWAY

BRIDGE OVER I-26

PIER SEGMENTS PC-2, PC-3, PC-4, PC-5, & PC-6-2 BAR LIST - 6

NO.	DATE	BY	REVISIONS	NO.	DATE	BY	REVISIONS

DESIGNED BY	DRAWN BY	CHECKED BY	SCALE	PROJECT TEAM LEADER	BRIDGE PLAN SHEET	DATE	BRP NO.
HC	LE	LE	No Scale	George Choubah	35 of 228	December 2018	BRP-1265

ACTUAL FILE:R35_BLRI_I26_PIER SEGMENT PC-2 TO PC-6-2 BAR LIST - 6.dgn
M:\PROJECTS_STATE_DOT\NC\blri_I26_nepa\Bridge\Microstation\Bridge Design Files\0_OPROJECTS.dgn
14-Dec-2018 12:17 PM

STATE	PROJECT	SHEET NUMBER
NC	BLRI OVER I-26	R36

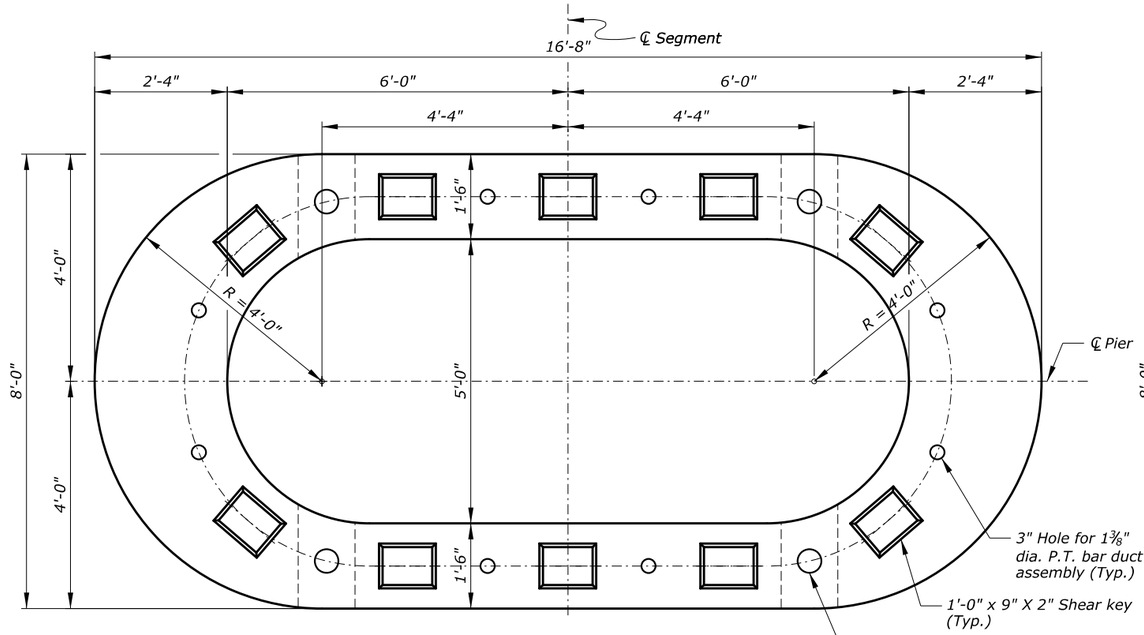

VIEW A-A

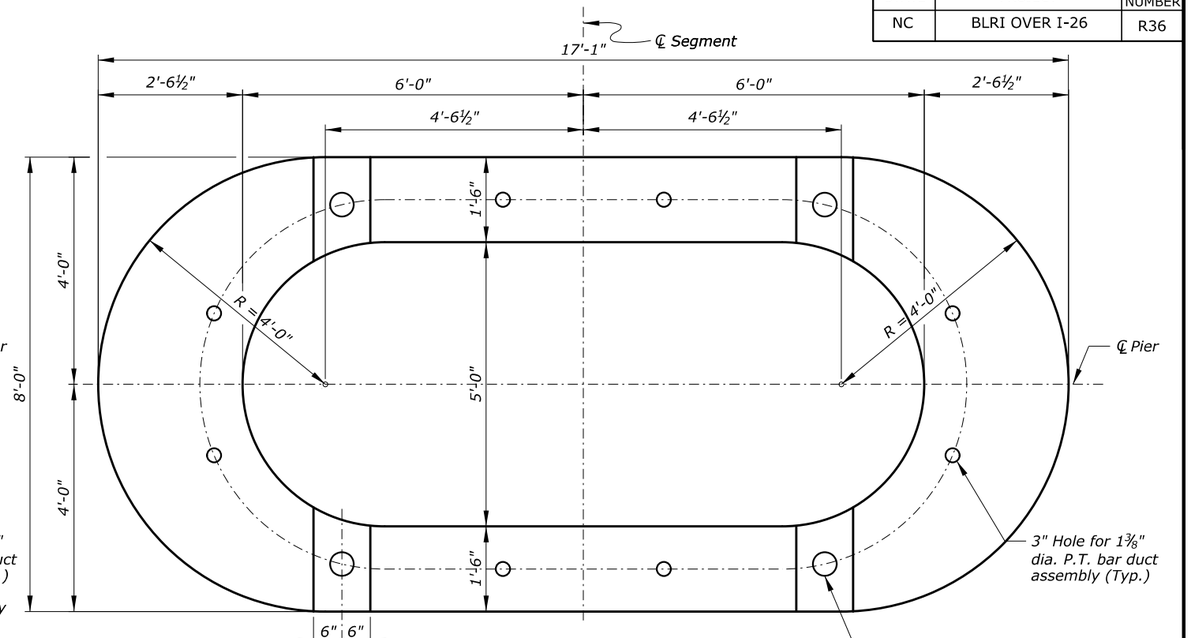

VIEW B-B

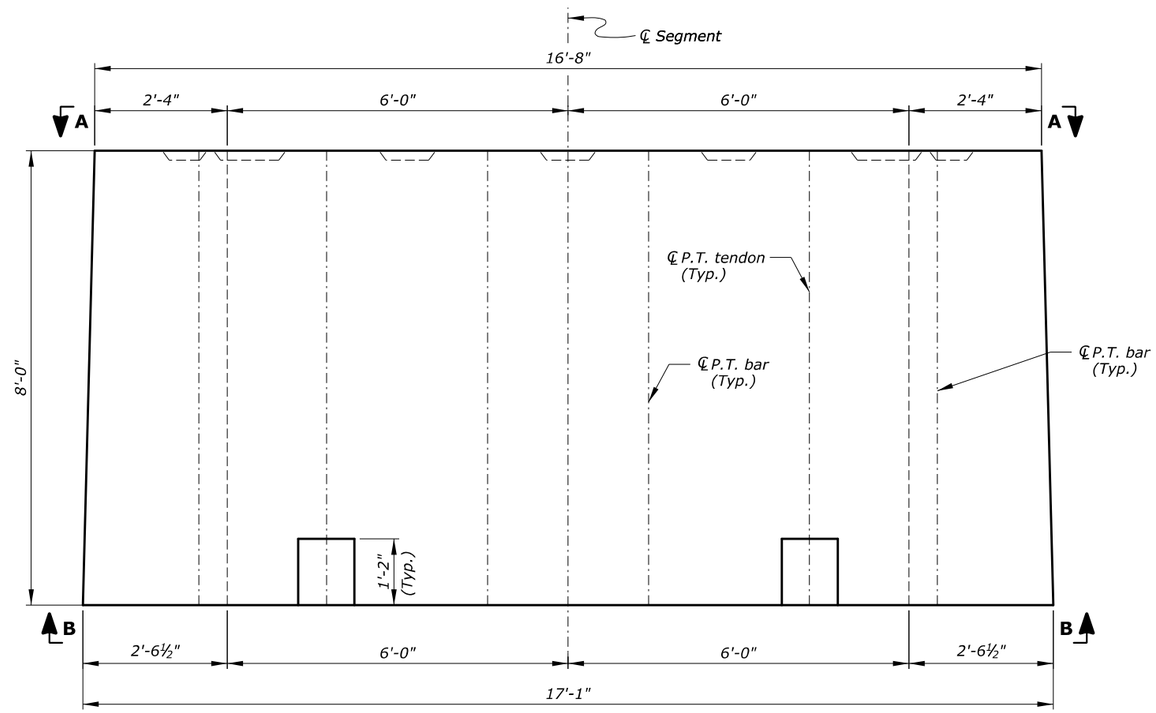

ELEVATION

Notes:

1. For shear key details, see "PIER MISCELLANEOUS DETAILS - 1" sheet.
2. For post-tensioning details, see "PIER MISCELLANEOUS DETAILS - 1" sheet.

***ESTIMATED QUANTITIES**

ITEM	UNIT	QUANTITY
Concrete - Class Special (6000 psi)	Cu. Yd.	19.7
9½" x 5" x 1¾" P.T. Bar Anchor Plate	Each	8
1⅜" P.T. Bar Duct Assembly**	Each	8
4½"± I.D. Duct (7'-2" long)	Each	4
Duct Coupler (4½"± I.D. Duct)	Each	4

* Quantities are for one Precast Box Pier Segment
** Duct assembly consists of 4½"± I.D. duct (7'-6" long) with duct adapter

U.S. DEPARTMENT OF TRANSPORTATION
FEDERAL HIGHWAY ADMINISTRATION
EASTERN FEDERAL LANDS HIGHWAY DIVISION

BLUE RIDGE PARKWAY

BRIDGE OVER I-26

PIER SEGMENT PC-6-1 LAYOUT

NO.	DATE	BY	REVISIONS	NO.	DATE	BY	REVISIONS	DESIGNED BY	DRAWN BY	CHECKED BY	SCALE	PROJECT TEAM LEADER	BRIDGE PLAN SHEET	DATE	BRP NO.
								HC	BK	CWN	¾" = 1'-0"	George Choubah	36 of 228	December 2018	BRP-1265

ACTUAL FILE:R36_BLRI_I26_PIER SEGMENT LAYOUT_PC-6-1.DGN
M:\PROJECTS_STATE_DOT\NC\blri_I26_repo\Bridge\Microstation\Bridge Design Files\0_OPROJECTS.dgn
14-Dec-2018 12:17 PM

STATE	PROJECT	SHEET NUMBER
NC	BLRI OVER I-26	R37

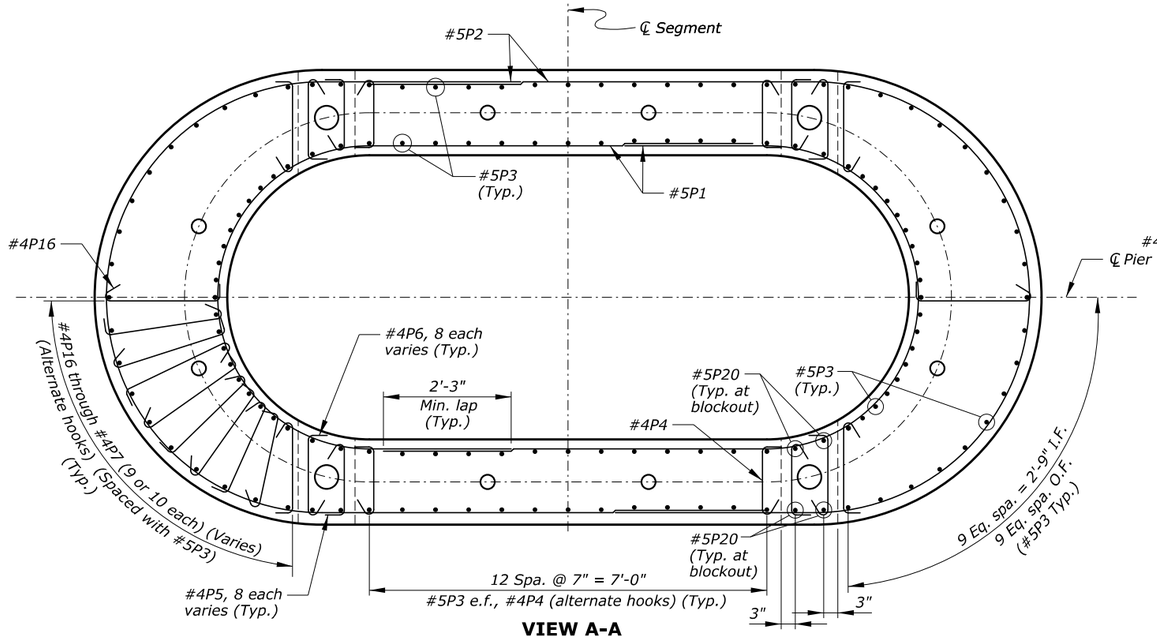

VIEW A-A

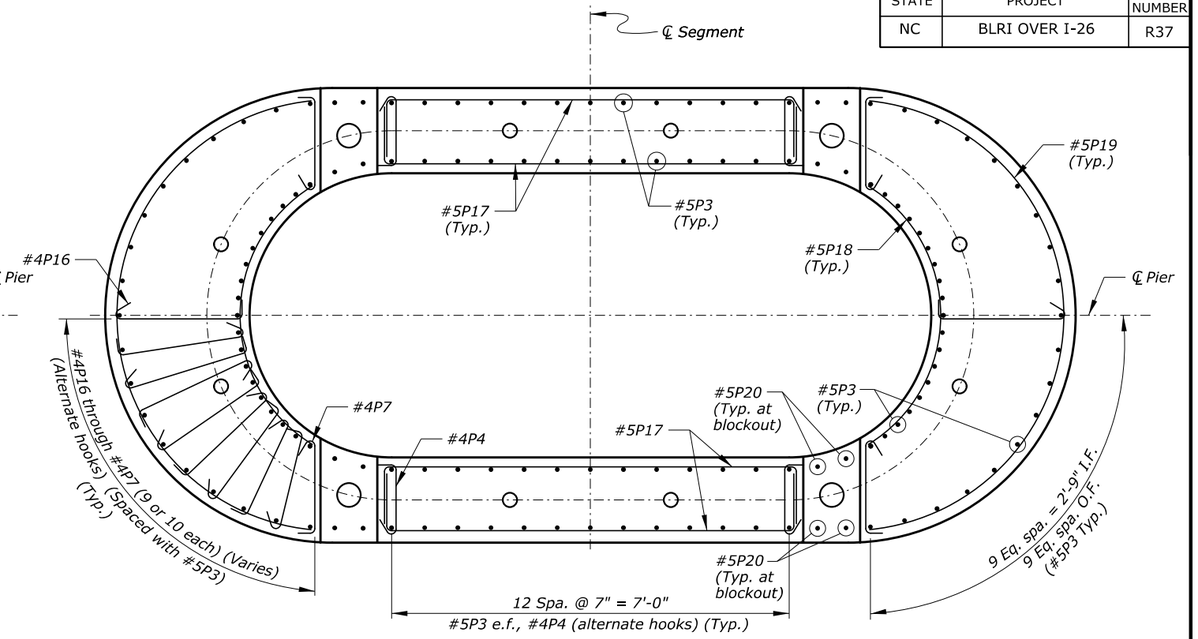

VIEW B-B

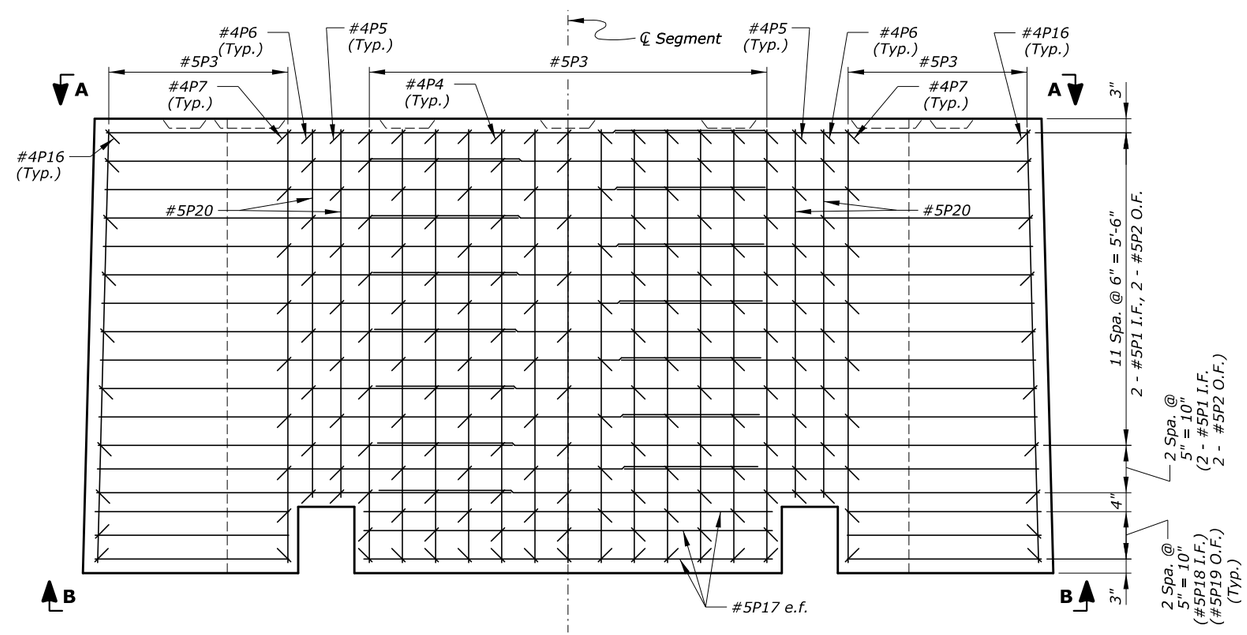

ELEVATION

(#4P8 through #4P15 not shown for clarity)

Notes:

1. *Minimum concrete cover is 1½" inside face and 2" outside face.*
2. *Alternate splices for #5P1 and #5P2 bars so that one splice is not adjacent to the other.*
3. *Space all reinforcement to clear P.T. bars, P.T. tendons, and blockouts.*
4. *Locate #4P4 through #4P16 bars at every bar grid intersection along the top and bottom layers of reinforcement and at alternate bar grid intersections between top and bottom layers.*

Key:

e.f. = each face
I.F. = inside face
O.F. = outside face

U.S. DEPARTMENT OF TRANSPORTATION
FEDERAL HIGHWAY ADMINISTRATION
EASTERN FEDERAL LANDS HIGHWAY DIVISION

BLUE RIDGE PARKWAY

BRIDGE OVER I-26

PIER SEGMENT PC-6-1 REINFORCEMENT

NO.	DATE	BY	REVISIONS	NO.	DATE	BY	REVISIONS	DESIGNED BY	DRAWN BY	CHECKED BY	SCALE	PROJECT TEAM LEADER	BRIDGE PLAN SHEET	DATE	BRP NO.
								HC	BK	CWN	¾" = 1'-0"	George Choubah	37 of 228	December 2018	BRP-1265

ACTUAL FILE:R37_BLRI_I26_PIER SEGMENT REINF_PC-6-1.DGN
M:\PROJECTS_STATE_DOT\NC\blri_I26_nepo\Bridge\Microstation\Bridge Design Files\0_OPROJECTS.dgn
14-Dec-2018 12:17 PM

STATE	PROJECT	SHEET NUMBER
NC	BLRI OVER I-26	R38

REINFORCING STEEL SCHEDULE — DIMENSION TABLE

PIER SEGMENT PC-6-1 BAR LIST

BAR MK	SIZE	TYPE	PIN SZ	LOCATION	QTY	LENGTH	WEIGHT	A	B	C	D	E	F	G	H	J	K	O	R	V or N
*5P1	5	10		Horiz.	28	17'-8"	516	6'-9"	8'-5"	2'-6"								5'-4 1/4"	2'-8 1/4"	
*5P2	5	10		Horiz.	28	23'-4 1/2"	683	7'-10"	12'-0 1/2"	3'-6"								7'-8"	3'-10"	
*5P3	5	STR		Vert. e.f.	128	7'-6"	1001		7'-6"											
*4P4	4	T9	0'-1 15/16"	Stirrups	248	1'-11 1/2"	324	0'-4 1/2"	1'-2 1/2"					0'-4 1/2"						
*4P5	4	T9	0'-1 15/16"	Stirrups	32	2'-0"	43	0'-4 1/2"	1'-3"					0'-4 1/2"						
*4P6	4	T9	0'-1 15/16"	Stirrups	32	2'-2"	46	0'-4 1/2"	1'-5"					0'-4 1/2"						
*4P7	4	T9	0'-1 15/16"	Stirrups	4 sets of 9	2'-4 1/2" to 2'-5" at 0'-0" Incr.	55	0'-4 1/2"	1'-7 1/2" to 1'-7 3/4" at 0'-0" Incr.					0'-4 1/2"						
*4P8	4	T9	0'-1 15/16"	Stirrups	4 sets of 10	2'-5" to 2'-6" at 0'-0" Incr.	63	0'-4 1/2"	1'-8" to 1'-8 3/4" at 0'-0" Incr.					0'-4 1/2"						
*4P9	4	T9	0'-1 15/16"	Stirrups	4 sets of 9	2'-6" to 2'-7" at 0'-0" Incr.	59	0'-4 1/2"	1'-9" to 1'-9 3/4" at 0'-0" Incr.					0'-4 1/2"						
*4P10	4	T9	0'-1 15/16"	Stirrups	4 sets of 10	2'-7" to 2'-8" at 0'-0" Incr.	67	0'-4 1/2"	1'-9 3/4" to 1'-11" at 0'-0" Incr.					0'-4 1/2"						
*4P11	4	T9	0'-1 15/16"	Stirrups	4 sets of 9	2'-7 1/2" to 2'-9" at 0'-0" Incr.	63	0'-4 1/2"	1'-10 1/2" to 2'-0" at 0'-0" Incr.					0'-4 1/2"						
*4P12	4	T9	0'-1 15/16"	Stirrups	4 sets of 10	2'-8 1/2" to 2'-10" at 0'-0" Incr.	71	0'-4 1/2"	1'-11 1/4" to 2'-1" at 0'-0" Incr.					0'-4 1/2"						
*4P13	4	T9	0'-1 15/16"	Stirrups	4 sets of 9	2'-9" to 2'-11" at 0'-0" Incr.	65	0'-4 1/2"	1'-11 3/4" to 2'-1 3/4" at 0'-0" Incr.					0'-4 1/2"						
*4P14	4	T9	0'-1 15/16"	Stirrups	4 sets of 10	2'-9 1/2" to 2'-11 1/2" at 0'-0" Incr.	74	0'-4 1/2"	2'-0 1/4" to 2'-2 1/2" at 0'-0" Incr.					0'-4 1/2"						
*4P15	4	T9	0'-1 15/16"	Stirrups	4 sets of 9	2'-9 1/2" to 3'-0" at 0'-0" Incr.	67	0'-4 1/2"	2'-0 1/2" to 2'-2 3/4" at 0'-0" Incr.					0'-4 1/2"						
*4P16	4	T9	0'-1 15/16"	Stirrups	2 sets of 10	2'-9 1/2" to 3'-0" at 0'-0" Incr.	38	0'-4 1/2"	2'-0 1/2" to 2'-3" at 0'-0" Incr.					0'-4 1/2"						
*5P17	5	17	0'-3 3/4"	Horiz. e.f.	12	9'-7"	120		1'-2 1/2"	7'-2"	1'-2 1/2"									
*5P18	5	9		Horiz.	6	5'-4 1/2"	34		5'-3 3/4"						1'-3 1/4"			4'-6 1/4"	2'-8 1/4"	
*5P19	5	9		Horiz.	6	11'-3 1/2"	71		11'-2 1/2"						3'-5 3/4"			7'-7 1/2"	3'-10"	

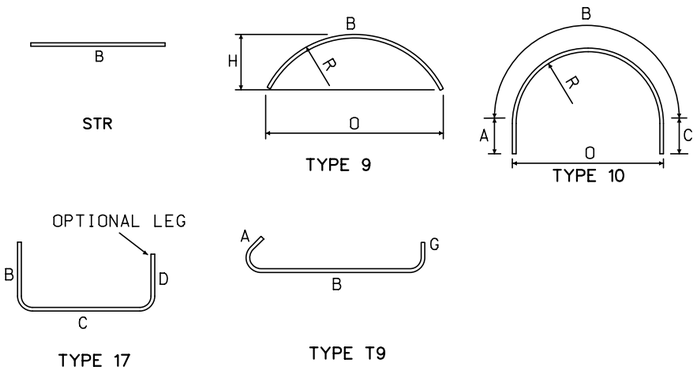

Note: Quantities are for one precast pier segment.

U.S. DEPARTMENT OF TRANSPORTATION
FEDERAL HIGHWAY ADMINISTRATION
EASTERN FEDERAL LANDS HIGHWAY DIVISION

BLUE RIDGE PARKWAY

BRIDGE OVER I-26

PIER SEGMENT PC-6-1 BAR LIST - 1

NO.	DATE	BY	REVISIONS	NO.	DATE	BY	REVISIONS	DESIGNED BY	DRAWN BY	CHECKED BY	SCALE	PROJECT TEAM LEADER	BRIDGE PLAN SHEET	DATE	BRP NO.
								HC	LE	LE	No Scale	George Choubah	38 of 228	December 2018	BRP-1265

ACTUAL FILE:R38_BLRI_I26_PIER SEGMENT PC-6-1 BAR LIST - 1.dgn
M:\PROJECTS_STATE_DOT\NC\blri_I26_nepa\Bridge\Microstation\Bridge Design Files\0_OPROJECTS.dgn
14-Dec-2018 12:17 PM

STATE	PROJECT	SHEET NUMBER
NC	BLRI OVER I-26	R39

REINFORCING STEEL SCHEDULE — DIMENSION TABLE

PIER SEGMENT PC-6-1 BAR LIST (CONTINUED)

BAR MK	SIZE	TYPE	PIN SZ	LOCATION	QTY	LENGTH	WEIGHT	A	B	C	D	E	F	G	H	J	K	O	R	V or N
*5P20	5	STR		Vert. e.f.	16	6'-4"	106		6'-4"											
SUBTOTAL							3590 LBS													

Note: Quantities are for one precast pier segment.

U.S. DEPARTMENT OF TRANSPORTATION
FEDERAL HIGHWAY ADMINISTRATION
EASTERN FEDERAL LANDS HIGHWAY DIVISION

BLUE RIDGE PARKWAY

BRIDGE OVER I-26

PIER SEGMENT PC-6-1 BAR LIST - 2

NO.	DATE	BY	REVISIONS	NO.	DATE	BY	REVISIONS	DESIGNED BY	DRAWN BY	CHECKED BY	SCALE	PROJECT TEAM LEADER	BRIDGE PLAN SHEET	DATE	BRP NO.
								HC	LE	LE	No Scale	George Choubah	39 of 228	December 2018	BRP-1265

ACTUAL FILE:R39_BLRI_I26_PIER SEGMENT PC-6-1 BAR LIST - 2.dgn
M:\PROJECTS_STATE_DOT\NC\blri_I26_nepa\Bridge\Microstation\Bridge Design Files\0_OPROJECTS.dgn
14-Dec-2018 12:17 PM

STATE	PROJECT	SHEET NUMBER
NC	BLRI OVER I-26	R40

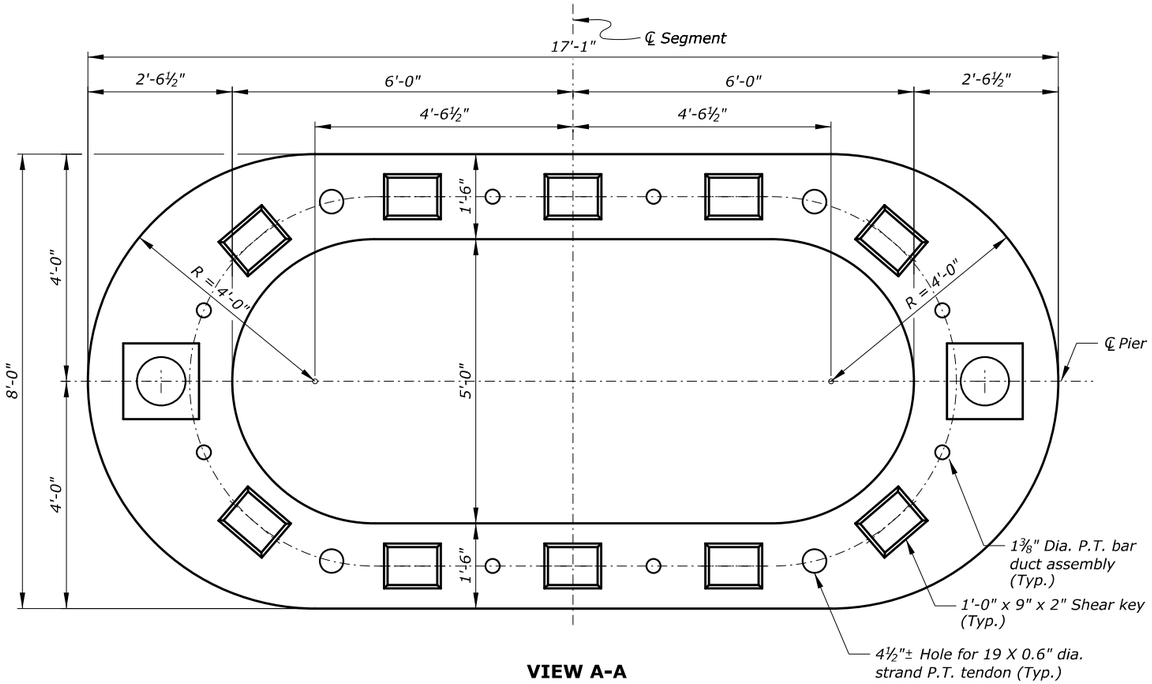

VIEW A-A

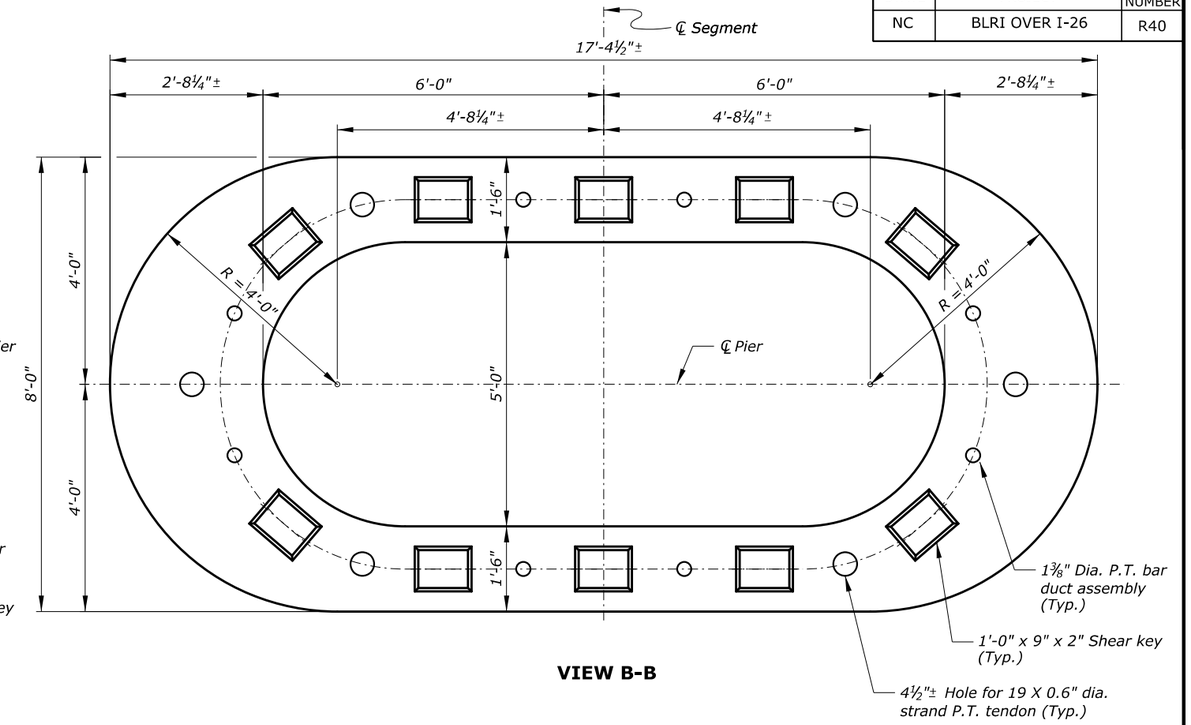

VIEW B-B

Notes:

1. For shear key details, see "PIER MISCELLANEOUS DETAILS - 1" sheet.
2. For post-tensioning details, see "PIER MISCELLANEOUS DETAILS - 1" sheet.

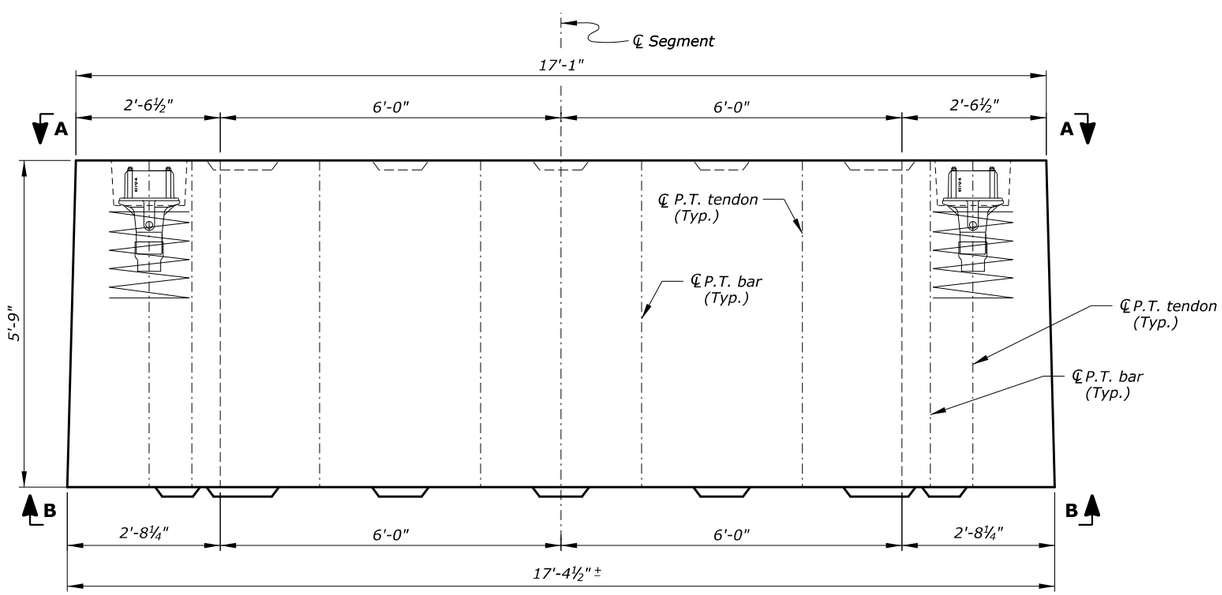

ELEVATION

*ESTIMATED QUANTITIES		
ITEM	UNIT	QUANTITY
Concrete - Class Special (6000 psi)	Cu. Yd.	14.8
9½" x 5" x 1¾" P.T. Bar Anchor Plate	Each	8
1⅜" P.T. Bar Duct Assembly**	Each	8
4½"± I.D. Duct (5'-11" long)	Each	6
Duct Coupler (4½"± I.D. Duct)	Each	6

* Quantities are for one Precast Box Pier Segment
** Duct assembly consists of 4½"± I.D. duct (5'-3" long) with duct adapter

U.S. DEPARTMENT OF TRANSPORTATION
FEDERAL HIGHWAY ADMINISTRATION
EASTERN FEDERAL LANDS HIGHWAY DIVISION

BLUE RIDGE PARKWAY

BRIDGE OVER I-26

PIER SEGMENT PC-7 LAYOUT

NO.	DATE	BY	REVISIONS	NO.	DATE	BY	REVISIONS	DESIGNED BY	DRAWN BY	CHECKED BY	SCALE	PROJECT TEAM LEADER	BRIDGE PLAN SHEET	DATE	BRP NO.
								HC	BK	CWN	¾" = 1'-0"	George Choubah	40 of 228	December 2018	BRP-1265

ACTUAL FILE:R40_BLRI_I26_PIER SEGMENT LAYOUT_PC-7.DGN
M:\PROJECTS_STATE_DOT\NC\blri_I26_repo\Bridge\Microstation\Bridge Design Files\0_OPROJECTS.dgn
14-Dec-2018 12:17 PM

STATE	PROJECT	SHEET NUMBER
NC	BLRI OVER I-26	R41

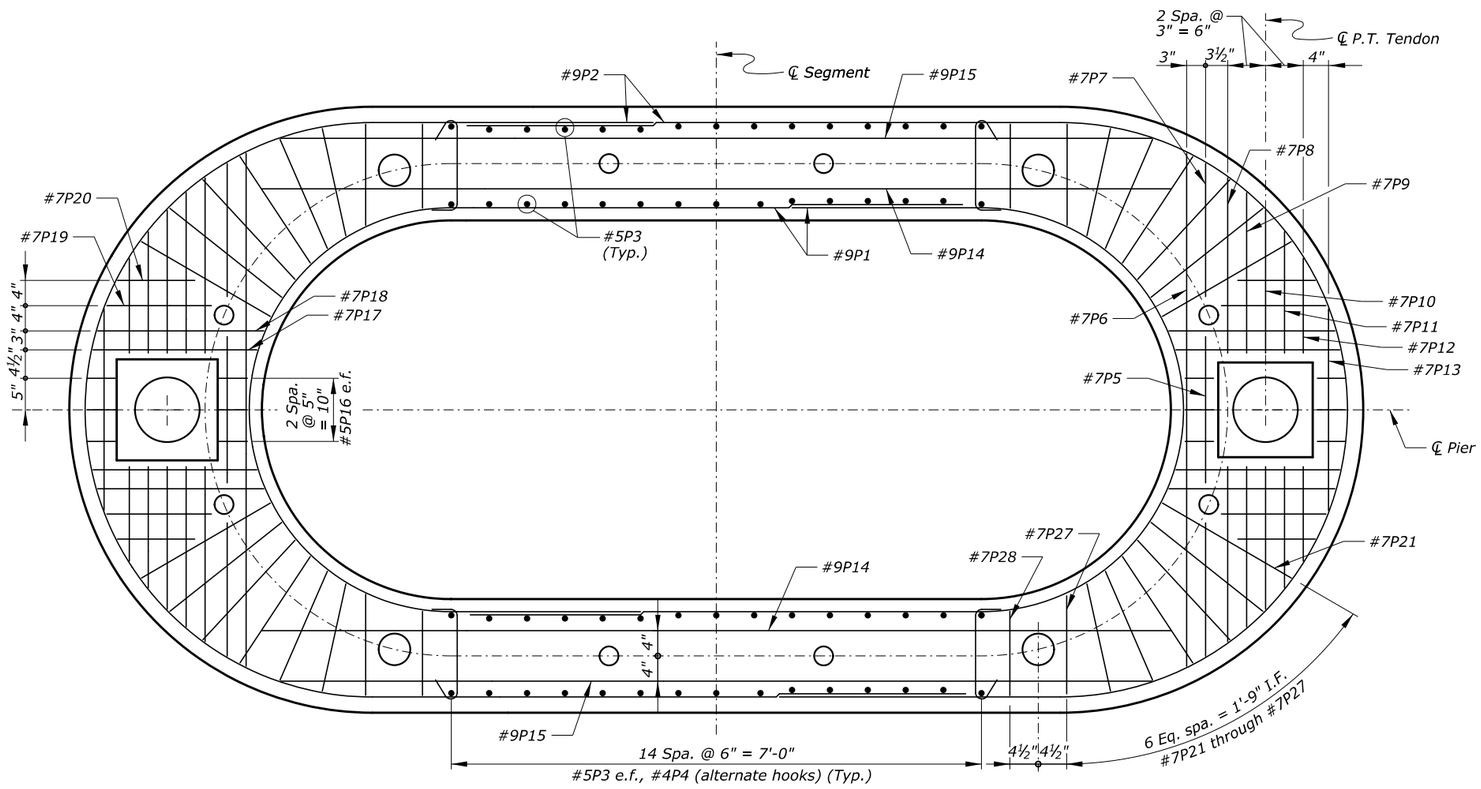

VIEW A-A

(Symmetrical about ℄ Pier)

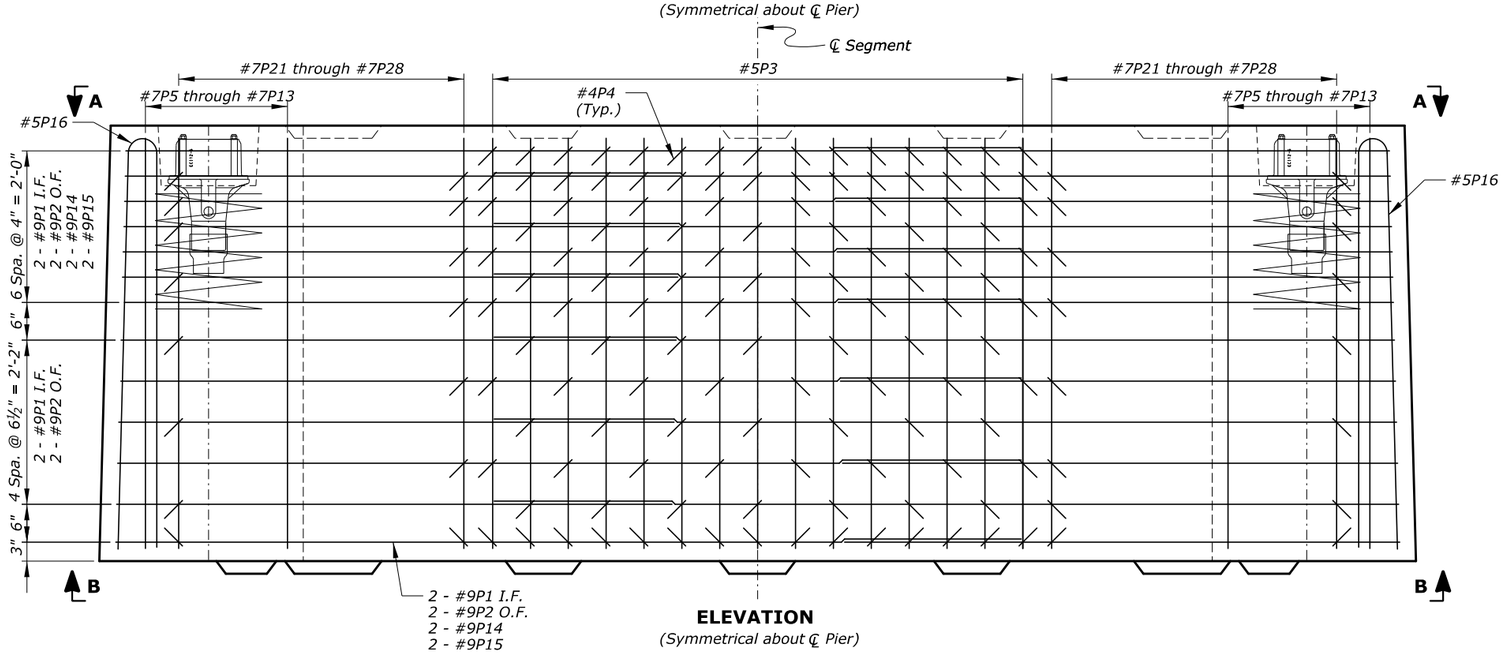

ELEVATION

(Symmetrical about ℄ Pier)

Notes:

1. Minimum concrete cover is 1½" inside face and 2" outside face.
2. Alternate splices for #9P1 and #9P2 bars so that one splice is not adjacent to the other.
3. Space all reinforcement to clear P.T. bars, P.T. tendons, and blockouts.
4. Locate #4P4 and #4P32 through #4P40 bars at every bar grid intersection along the top two layers and bottom layer of reinforcement and at alternate bar grid intersections between top and bottom layers.
5. Place #5P29, #5P30, and #5P31 bars at every layer below top.

Key:

e.f. = each face
I.F. = inside face
O.F. = outside face

U.S. DEPARTMENT OF TRANSPORTATION
FEDERAL HIGHWAY ADMINISTRATION
EASTERN FEDERAL LANDS HIGHWAY DIVISION

BLUE RIDGE PARKWAY

BRIDGE OVER I-26

PIER SEGMENT PC-7 REINFORCEMENT - 1

NO.	DATE	BY	REVISIONS	NO.	DATE	BY	REVISIONS	DESIGNED BY	DRAWN BY	CHECKED BY	SCALE	PROJECT TEAM LEADER	BRIDGE PLAN SHEET	DATE	BRP NO.
								HC	BK	CWN	1" = 1'-0"	George Choubah	41 of 228	December 2018	BRP-1265

ACTUAL FILE:R41_BLRI_I26_PIER SEGMENT REINF_PC-7 - 1.DGN
M:\PROJECTS_STATE_DOT\NC\blri_I26_nepo\Bridge\Microstation\Bridge Design Files\0_OPROJECTS.dgn
14-Dec-2018 12:17 PM

STATE	PROJECT	SHEET NUMBER
NC	BLRI OVER I-26	R42

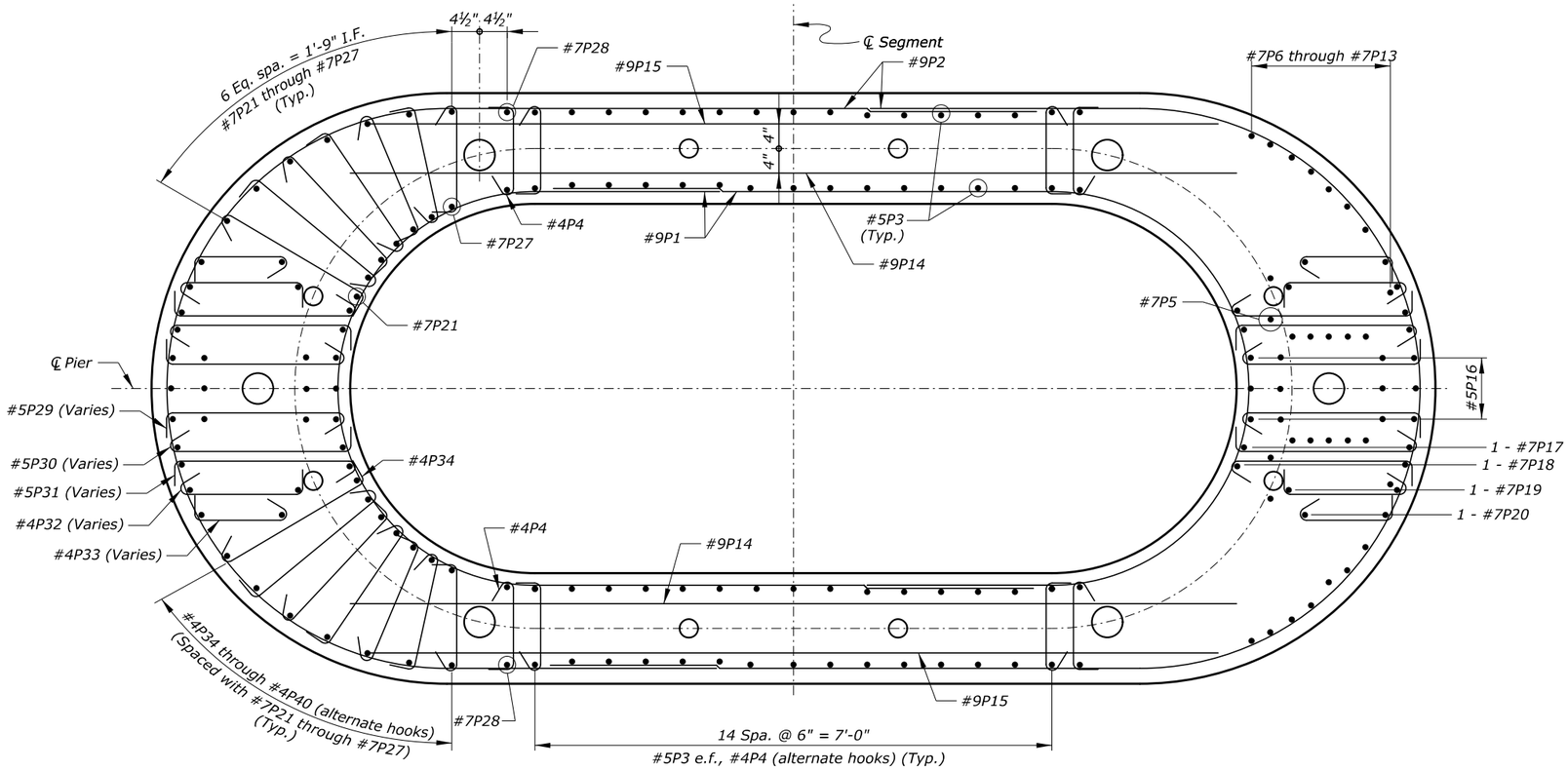

VIEW B-B

(Bars #7P5 through #7P13 not shown for clarity in left half)
(Bars #7P21 through #7P27 and #4P34 through #4P40 not shown for clarity in right half)
(Symmetrical about ℄ Pier)

Notes:

1. *Minimum concrete cover is 1½" inside face and 2" outside face.*
2. *Alternate splices for #9P1 and #9P2 bars so that one splice is not adjacent to the other.*
3. *Space all reinforcement to clear P.T. bars, P.T. tendons, and blockouts.*
4. *Locate #4P4 and #4P32 through #4P40 bars at every bar grid intersection along the top two layers and bottom layer of reinforcement and at alternate bar grid intersections between top and bottom layers.*
5. *Place #5P29, #5P30, and #5P31 bars at every layer below top.*
6. *Hook #5P30 through #4P33 bars with #7P17 through #7P20 bars.*

Key:

e.f. = each face
I.F. = inside face
O.F. = outside face

U.S. DEPARTMENT OF TRANSPORTATION
FEDERAL HIGHWAY ADMINISTRATION
EASTERN FEDERAL LANDS HIGHWAY DIVISION

BLUE RIDGE PARKWAY

BRIDGE OVER I-26

PIER SEGMENT PC-7 REINFORCEMENT - 2

NO.	DATE	BY	REVISIONS	NO.	DATE	BY	REVISIONS	DESIGNED BY	DRAWN BY	CHECKED BY	SCALE	PROJECT TEAM LEADER	BRIDGE PLAN SHEET	DATE	BRP NO.
								HC	BK	CWN	1" = 1'-0"	George Choubah	42 of 228	December 2018	BRP-1265

ACTUAL FILE:R42_BLRI_I26_PIER SEGMENT REINF_PC-7 - 2.DGN
M:\PROJECTS_STATE_DOT\NC\blri_I26_nepa\Bridge\Microstation\Bridge Design Files\0_OPROJECTS.dgn
14-Dec-2018 12:17 PM

STATE	PROJECT	SHEET NUMBER
NC	BLRI OVER I-26	R43

REINFORCING STEEL SCHEDULE — DIMENSION TABLE

PIER SEGMENT PC-7 BAR LIST

BAR MK	SIZE	TYPE	PIN SZ	LOCATION	QTY	LENGTH	WEIGHT	A	B	C	D	E	F	G	H	J	K	O	R	V or N
*9P1	9	10		Horiz.	26	19′-1½″	1691	6′-9″	8′-6½″	3′-10″								5′-5¼″	2′-8¾″	
*9P2	9	10		Horiz.	26	25′-0″	2210	7′-10″	12′-0½″	5′-1½″								7′-8″	3′-10″	
*5P3	5	STR		Vert. e.f.	60	5′-3″	329		5′-3″											
*4P4	4	T9	0′-1 15/16″	Stirrups	240	1′-11½″	314	0′-4½″	1′-2½″					0′-4½″						
*7P5	7	17	0′-5 5/16″	Vert.	2	12′-9½″	52		5′-5″	1′-11¼″	5′-5″									
*7P6	7	17	0′-5 5/16″		2	17′-5½″	71		5′-4″	6′-9¼″	5′-4″									
*7P7	7	55	0′-5 5/16″	Vert.	4	12′-3″	100	5′-3″	1′-9″	90°	89°									
*7P8	7	55	0′-5 5/16″	Vert.	4	12′-9″	104		5′-3″	2′-3¼″	0′-1¾″	5′-3″								
*7P9	7	55	0′-5 5/16″	Vert.	4	12′-7″	103		5′-3″	2′-1″	0′-1¾″	5′-3″								
*7P10	7	55	0′-5 5/16″	Vert.	4	12′-4″	101		5′-3″	1′-10¼″	0′-1¾″	5′-3″								
*7P11	7	55	0′-5 5/16″	Vert.	4	12′-1″	99		5′-3″	1′-6¾″	0′-2¼″	5′-3″								
*7P12	7	55	0′-5 5/16″	Vert.	4	11′-9″	96		5′-3″	1′-2¾″	0′-2½″	5′-3″								
*7P13	7	17	0′-5 5/16″	Vert.	2	13′-2″	54		5′-3″	2′-8″	5′-3″									
*9P14	9	STR		Horiz.	16	12′-0″	653		12′-0″											
*9P15	9	STR		Horiz.	16	11′-6″	626		11′-6″											
*5P16	5	55	0′-3¾″	Vert.	12	10′-11″	137		5′-3″	0′-5″	0′-2″	5′-3″								
*7P17	7	55	0′-5 5/16″	Vert.	4	12′-8″	104		5′-3″	2′-2″	0′-2″	5′-3″								
*7P18	7	55	0′-5 5/16″	Vert.	4	12′-8½″	104		5′-3″	2′-2½″	0′-2″	5′-3″								
*7P19	7	55	0′-5 5/16″	Vert.	4	11′-10½″	97		5′-3″	1′-4½″	0′-1¾″	5′-3″								
*7P20	7	55	0′-5 5/16″	Vert.	4	11′-5½″	94		5′-3″	0′-11¾″	0′-2″	5′-3″								
*7P21	7	55	0′-5 5/16″	Vert.	4	12′-5½″	102		5′-3″	1′-11¼″	0′-2¼″	5′-3″								
*7P22	7	55	0′-5 5/16″	Vert.	4	12′-4″	101		5′-3″	1′-10¼″	0′-2″	5′-3″								
*7P23	7	55	0′-5 5/16″	Vert.	4	12′-3½″	100		5′-3″	1′-9½″	0′-0½″	5′-3″								
*7P24	7	55	0′-5 5/16″	Vert.	4	12′-1½″	99		5′-3″	1′-7¾″	0′-1¾″	5′-3″								
*7P25	7	55	0′-5 5/16″	Vert.	4	12′-1″	99		5′-3″	1′-6¾″	0′-0½″	5′-3″								
*7P26	7	55	0′-5 5/16″	Vert.	4	11′-11½″	98		5′-3″	1′-5½″	0′-0¼″	5′-3″								
*7P27	7	55	0′-5 5/16″	Vert.	4	11′-10″	97		5′-3″	1′-4″	0′-0½″	5′-3″								
*7P28	7	55	0′-5 5/16″	Vert.	4	11′-7½″	95		5′-3″	1′-1¼″	0′-0½″	5′-3″								
*5P29	5	T9	0′-2 9/16″	Stirrups	4 sets of 12	3′-3″ to 3′-4½″ at 0′-0″ Incr.	160	0′-5½″	2′-3¼″ to 2′-5″ at 0′-0″ Incr.					0′-6″						
*5P30	5	T9	0′-2 9/16″	Stirrups	4 sets of 12	3′-2½″ to 3′-3½″ at 0′-0″ Incr.	157	0′-5½″	2′-2¾″ to 2′-4″ at 0′-0″ Incr.					0′-6″						
*5P31	5	T9	0′-2 9/16″	Stirrups	4 sets of 12	3′-2½″ to 3′-4″ at 0′-0″ Incr.	158	0′-5½″	2′-3″ to 2′-4½″ at 0′-0″ Incr.					0′-6″						
*4P32	4	T9	0′-1 15/16″	Stirrups	4 sets of 8	2′-2″ to 2′-3″ at 0′-0″ Incr.	45	0′-4½″	1′-5″ to 1′-6″ at 0′-0″ Incr.					0′-4½″						
*4P33	4	T9	0′-1 15/16″	Stirrups	4 sets of 8	1′-9½″ to 1′-11″ at 0′-0″ Incr.	37	0′-4½″	1′-0½″ to 1′-1¾″ at 0′-0″ Incr.					0′-4½″						
*4P34	4	T9	0′-1 15/16″	Stirrups	4 sets of 8	2′-9″ to 2′-10½″ at 0′-0″ Incr.	58	0′-4½″	1′-11¾″ to 2′-1¼″ at 0′-0″ Incr.					0′-4½″						

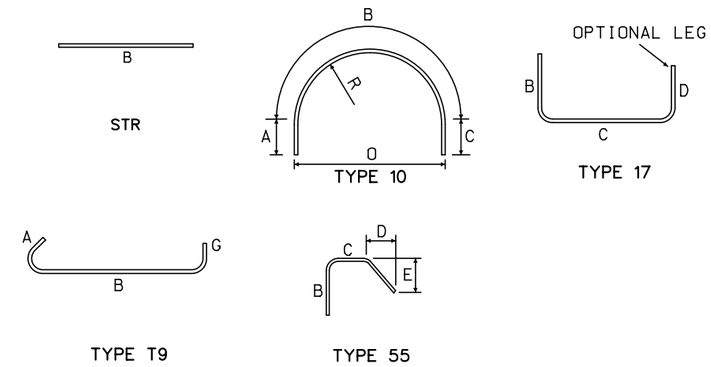

Note: Quantities are for one precast pier segment.

U.S. DEPARTMENT OF TRANSPORTATION
FEDERAL HIGHWAY ADMINISTRATION
EASTERN FEDERAL LANDS HIGHWAY DIVISION

BLUE RIDGE PARKWAY

BRIDGE OVER I-26

PIER SEGMENT PC-7 BAR LIST - 1

NO.	DATE	BY	REVISIONS	NO.	DATE	BY	REVISIONS

DESIGNED BY	DRAWN BY	CHECKED BY	SCALE	PROJECT TEAM LEADER	BRIDGE PLAN SHEET	DATE	BRP NO.
HC	LE	LE	No Scale	George Choubah	43 of 228	December 2018	BRP-1265

ACTUAL FILE:R43_BLRI_I26_PIER SEGMENT PC-7 BAR LIST - 1.dgn
M:\PROJECTS_STATE_DOT\NC\blri_I26_nepa\Bridge\Microstation\Bridge Design Files\0_OPROJECTS.dgn
14-Dec-2018 12:17 PM

STATE	PROJECT	SHEET NUMBER
NC	BLRI OVER I-26	R44

REINFORCING STEEL SCHEDULE — DIMENSION TABLE

PIER SEGMENT PC-7 BAR LIST (CONTINUED)

BAR MK	SIZE	TYPE	PIN SZ	LOCATION	QTY	LENGTH	WEIGHT	A	B	C	D	E	F	G	H	J	K	O	R	V or N
*4P35	4	T9	0'-1 15/16"	*Stirrups	4 sets of 8	2'-8" to 2'-9 1/2" at 0'-0" Incr.	56	0'-4 1/2"	1'-10 3/4" to 2'-0 1/4" at 0'-0" Incr.					0'-4 1/2"						
*4P36	4	T9	0'-1 15/16"	*Stirrups	4 sets of 8	2'-6 1/2" to 2'-7 1/2" at 0'-0" Incr.	53	0'-4 1/2"	1'-9 1/2" to 1'-10 1/4" at 0'-0" Incr.					0'-4 1/2"						
*4P37	4	T9	0'-1 15/16"	*Stirrups	4 sets of 8	2'-5 1/2" to 2'-6 1/2" at 0'-0" Incr.	51	0'-4 1/2"	1'-8 1/4" to 1'-9 1/4" at 0'-0" Incr.					0'-4 1/2"						
*4P38	4	T9	0'-1 15/16"	*Stirrups	4 sets of 8	2'-4" to 2'-5" at 0'-0" Incr.	49	0'-4 1/2"	1'-7" to 1'-7 3/4" at 0'-0" Incr.					0'-4 1/2"						
*4P39	4	T9	0'-1 15/16"	*Stirrups	4 sets of 8	2'-2 1/2" to 2'-3" at 0'-0" Incr.	46	0'-4 1/2"	1'-5 1/2" to 1'-6" at 0'-0" Incr.					0'-4 1/2"						
*4P40	4	T9	0'-1 15/16"	*Stirrups	4 sets of 8	2'-1" to 2'-1 1/2" at 0'-0" Incr.	43	0'-4 1/2"	1'-4" to 1'-4 1/2" at 0'-0" Incr.					0'-4 1/2"						
				SUBTOTAL			8877 LBS													

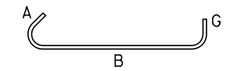

TYPE T9

Note: Quantities are for one precast pier segment.

U.S. DEPARTMENT OF TRANSPORTATION
FEDERAL HIGHWAY ADMINISTRATION
EASTERN FEDERAL LANDS HIGHWAY DIVISION

BLUE RIDGE PARKWAY

BRIDGE OVER I-26

PIER SEGMENT PC-7 BAR LIST - 2

NO.	DATE	BY	REVISIONS	NO.	DATE	BY	REVISIONS

DESIGNED BY	DRAWN BY	CHECKED BY	SCALE	PROJECT TEAM LEADER	BRIDGE PLAN SHEET	DATE	BRP NO.
HC	LE	LE	No Scale	George Choubah	44 of 228	December 2018	BRP-1265

ACTUAL FILE:R44_BLRI_I26_PIER SEGMENT PC-7 BAR LIST - 2.dgn
M:\PROJECTS_STATE_DOT\NC\blri_I26_nepa\Bridge\Microstation\Bridge Design Files\0_OPROJECTS.dgn
14-Dec-2018 12:18 PM

STATE	PROJECT	SHEET NUMBER
NC	BLRI OVER I-26	R45

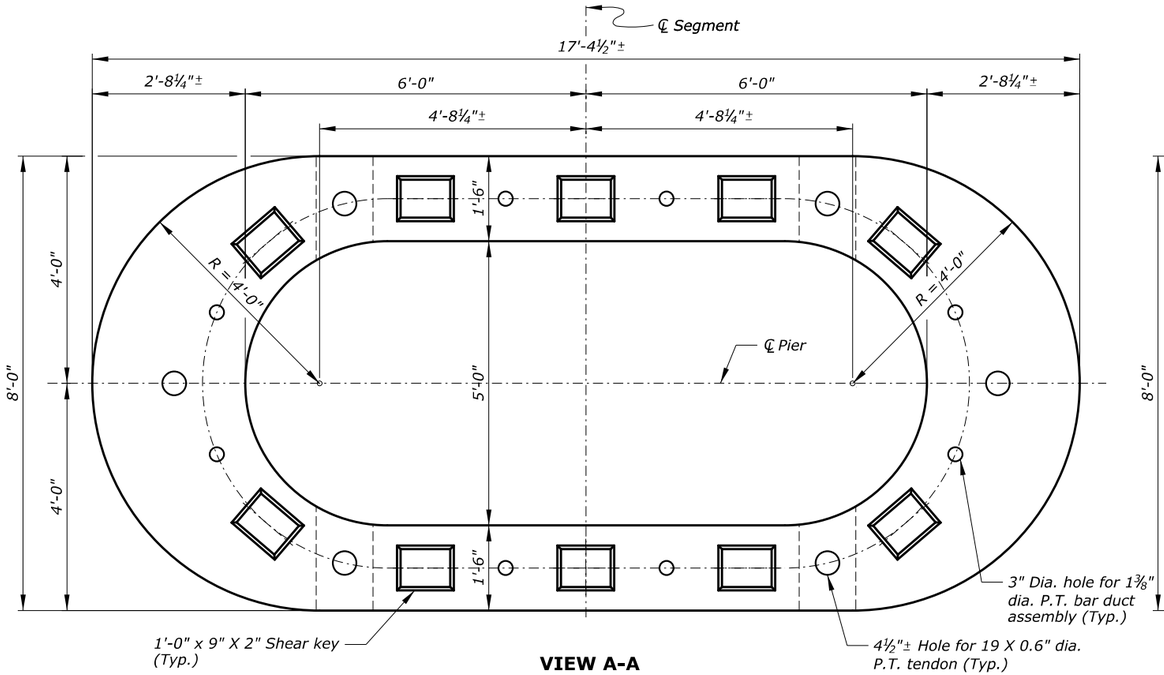

VIEW A-A

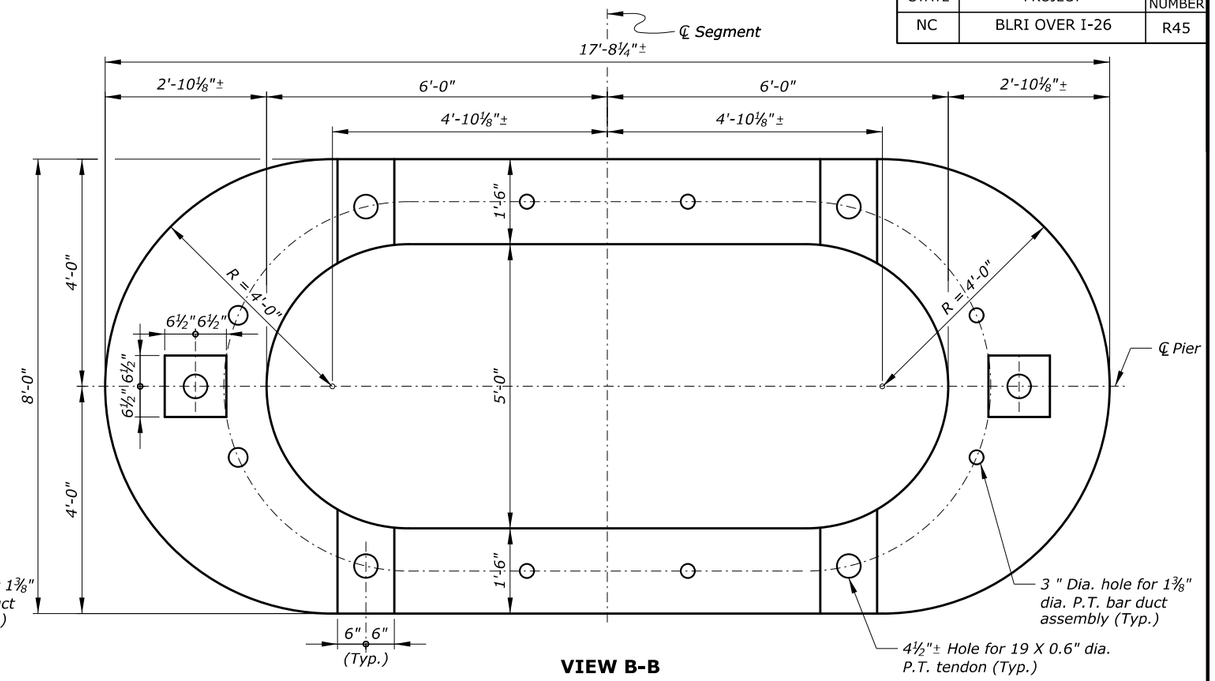

VIEW B-B

Notes:

1. *For shear key details, see "PIER MISCELLANEOUS DETAILS - 1" sheet.*
2. *For post-tensioning details, see "PIER MISCELLANEOUS DETAILS - 1" sheet.*

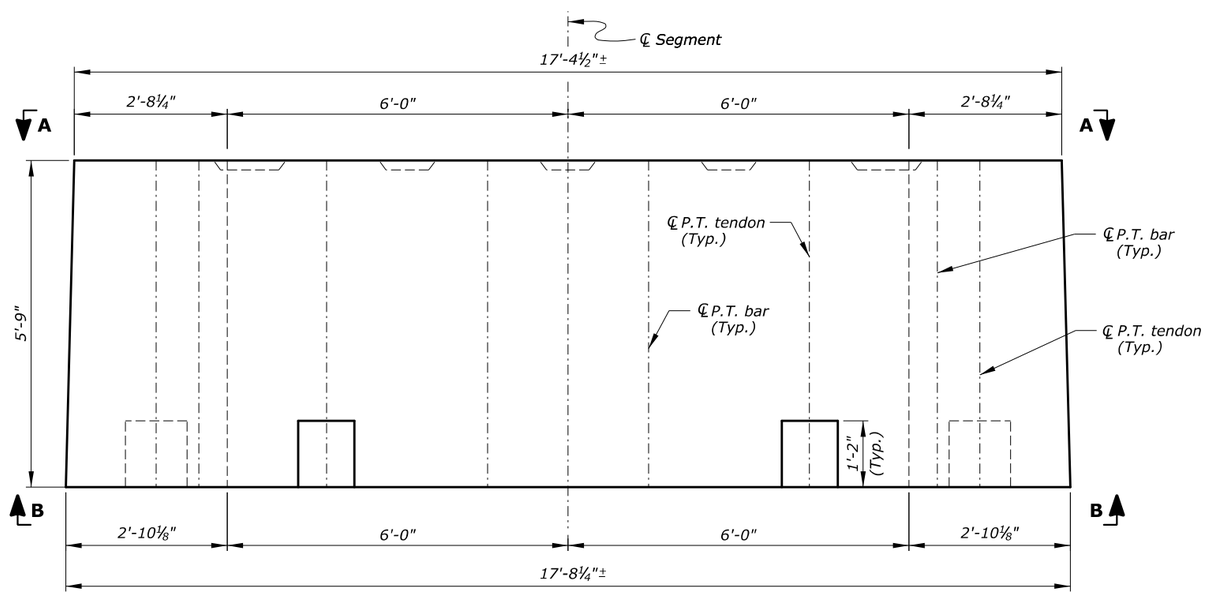

ELEVATION

*ESTIMATED QUANTITIES		
ITEM	UNIT	QUANTITY
Concrete - Class Special (6000 psi)	*Cu. Yd.*	*15.3*
9½" x 5" x 1¾" P.T. Bar Anchor Plate	*Each*	*8*
*1⅜" P.T. Bar Duct Assembly***	*Each*	*8*
4½"± I.D. Duct (7'-2" long)	*Each*	*6*
Duct Coupler (4½"± I.D. Duct)	*Each*	*6*

** Quantities are for one Precast Box Pier Segment*
*** Duct assembly consists of 4½"± I.D. duct (7'-6" long) with duct adapter*

U.S. DEPARTMENT OF TRANSPORTATION
FEDERAL HIGHWAY ADMINISTRATION
EASTERN FEDERAL LANDS HIGHWAY DIVISION

BLUE RIDGE PARKWAY

BRIDGE OVER I-26

PIER SEGMENT PC-8 LAYOUT

NO.	DATE	BY	REVISIONS	NO.	DATE	BY	REVISIONS	DESIGNED BY	DRAWN BY	CHECKED BY	SCALE	PROJECT TEAM LEADER	BRIDGE PLAN SHEET	DATE	BRP NO.
								HC	BK	CWN	¾" = 1'-0"	George Choubah	45 of 228	December 2018	BRP-1265

ACTUAL FILE:R45_BLRI_I26_PIER SEGMENT LAYOUT_PC-8.DGN
M:\PROJECTS_STATE_DOT\WC\blri_I26_repo\Bridge\Microstation\Bridge Design Files\0_OPROJECTS.dgn
14-Dec-2018 12:18 PM

STATE	PROJECT	SHEET NUMBER
NC	BLRI OVER I-26	R46

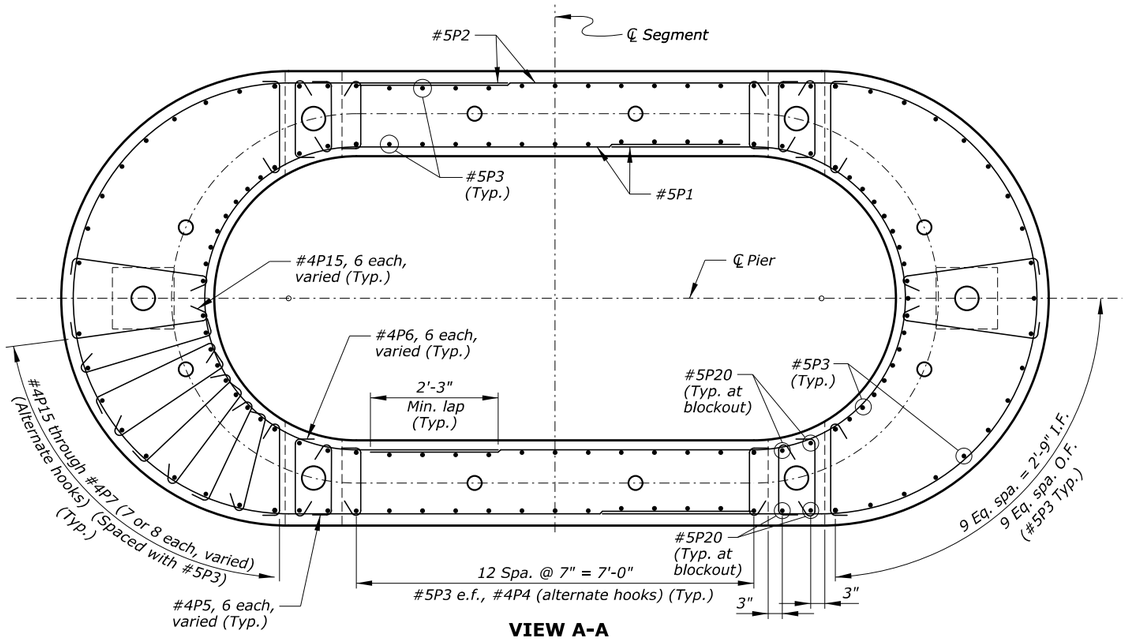

VIEW A-A

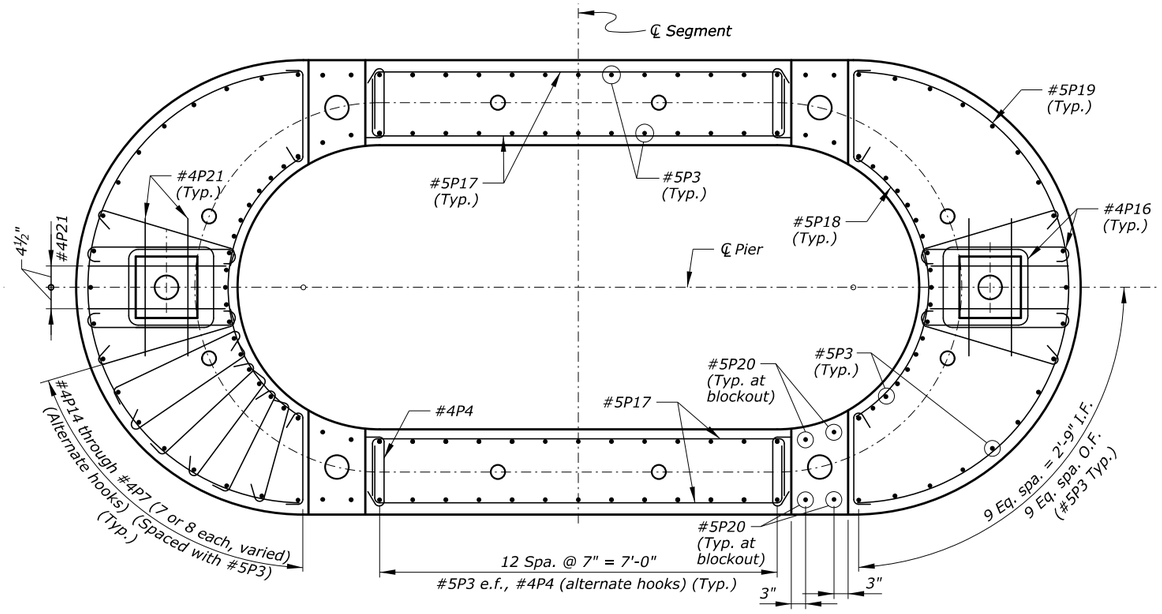

VIEW B-B

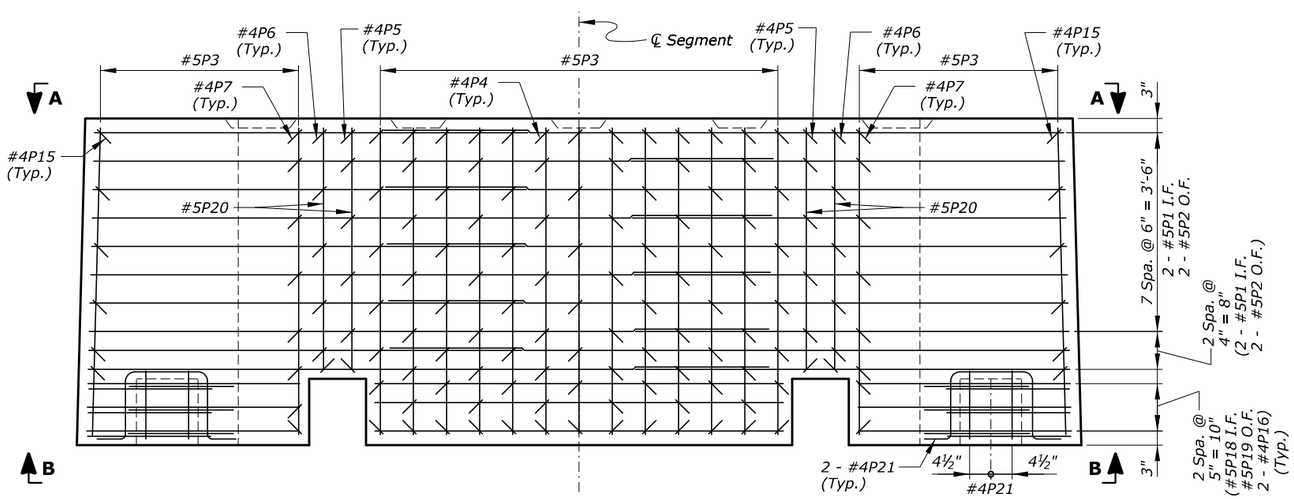

ELEVATION

(#4P8 through #4P14 not shown for clarity)

Notes:

1. *Minimum concrete cover is 1½" inside face and 2" outside face.*
2. *Alternate splices for #5P1 and #5P2 bars so that one splice is not adjacent to the other.*
3. *Space all reinforcement to clear P.T. bars, P.T. tendons, and blockouts.*
4. *Locate #4P4 through #4P14 bars at every bar grid intersection along the top and bottom layers of reinforcement and at alternate bar grid intersections between top and bottom layers.*

Key:

e.f. = each face
I.F. = inside face
O.F. = outside face

U.S. DEPARTMENT OF TRANSPORTATION
FEDERAL HIGHWAY ADMINISTRATION
EASTERN FEDERAL LANDS HIGHWAY DIVISION

BLUE RIDGE PARKWAY

BRIDGE OVER I-26

PIER SEGMENT PC-8 REINFORCEMENT

NO.	DATE	BY	REVISIONS	NO.	DATE	BY	REVISIONS	DESIGNED BY	DRAWN BY	CHECKED BY	SCALE	PROJECT TEAM LEADER	BRIDGE PLAN SHEET	DATE	BRP NO.
								HC	BK	CWN	¾" = 1'-0"	George Choubah	46 of 228	December 2018	BRP-1265

ACTUAL FILE:R46_BLRI_I26_PIER SEGMENT REINF_PC-8.DGN
M:\PROJECTS_STATE_DOT\NC\blri_I26_repo\Bridge\Microstation\Bridge Design Files\0_OPROJECTS.dgn
14-Dec-2018 12:18 PM

STATE	PROJECT	SHEET NUMBER
NC	BLRI OVER I-26	R47

REINFORCING STEEL SCHEDULE — DIMENSION TABLE

PIER SEGMENT PC-8 BAR LIST

BAR MK	SIZE	TYPE	PIN SZ	LOCATION	QTY	LENGTH	WEIGHT	A	B	C	D	E	F	G	H	J	K	O	R	V or N
*5P1	5	10		Horiz.	20	17'-8"	369	6'-9"	8'-5"	2'-6"								5'-4 1/4"	2'-8 1/4"	
*5P2	5	10		Horiz.	20	24'-1"	502	8'-2 1/4"	12'-0 1/2"	3'-10 1/4"								7'-8"	3'-10"	
*5P3	5	STR		Vert. e.f.	128	5'-3"	701		5'-3"											
*4P4	4	T9	0'-1 15/16"	Stirrups	196	1'-11 1/2"	256	0'-4 1/2"	1'-2 1/2"					0'-4 1/2"						
*4P5	4	T9	0'-1 15/16"	Stirrups	24	2'-0"	32	0'-4 1/2"	1'-3"					0'-4 1/2"						
*4P6	4	T9	0'-1 15/16"	Stirrups	24	2'-2"	35	0'-4 1/2"	1'-5"					0'-4 1/2"						
*4P7	4	T9	0'-1 15/16"	Stirrups	4 sets of 8	2'-5" to 2'-5" at 0'-0" Incr.	50	0'-4 1/2"	1'-7 3/4" to 1'-8" at 0'-0" Incr.					0'-4 1/2"						
*4P8	4	T9	0'-1 15/16"	Stirrups	4 sets of 7	2'-6 1/2" to 2'-6 1/2" at 0'-0" Incr.	46	0'-4 1/2"	1'-9 1/4" to 1'-9 1/2" at 0'-0" Incr.					0'-4 1/2"						
*4P9	4	T9	0'-1 15/16"	Stirrups	4 sets of 8	2'-8" to 2'-8 1/2" at 0'-0" Incr.	55	0'-4 1/2"	1'-10 3/4" to 1'-11 1/4" at 0'-0" Incr.					0'-4 1/2"						
*4P10	4	T9	0'-1 15/16"	Stirrups	4 sets of 7	2'-9 1/2" to 2'-10" at 0'-0" Incr.	51	0'-4 1/2"	2'-0 1/4" to 2'-1" at 0'-0" Incr.					0'-4 1/2"						
*4P11	4	T9	0'-1 15/16"	Stirrups	4 sets of 8	2'-10 1/2" to 2'-11 1/2" at 0'-0" Incr.	60	0'-4 1/2"	2'-1 1/2" to 2'-2 1/2" at 0'-0" Incr.					0'-4 1/2"						
*4P12	4	T9	0'-1 15/16"	Stirrups	4 sets of 7	3'-0" to 3'-1" at 0'-0" Incr.	55	0'-4 1/2"	2'-2 3/4" to 2'-3 3/4" at 0'-0" Incr.					0'-4 1/2"						
*4P13	4	T9	0'-1 15/16"	Stirrups	4 sets of 8	3'-1" to 3'-2" at 0'-0" Incr.	65	0'-4 1/2"	2'-3 3/4" to 2'-5" at 0'-0" Incr.					0'-4 1/2"						
*4P14	4	T9	0'-1 15/16"	Stirrups	4 sets of 7	3'-1 1/2" to 3'-3" at 0'-0" Incr.	58	0'-4 1/2"	2'-4 1/2" to 2'-5 3/4" at 0'-0" Incr.					0'-4 1/2"						
*4P15	4	T9	0'-1 15/16"	Stirrups	4 sets of 6	3'-2" to 3'-3" at 0'-0" Incr.	50	0'-4 1/2"	2'-4 3/4" to 2'-5 3/4" at 0'-0" Incr.					0'-4 1/2"						
*4P16	4	32	0'-3 1/8"	Horiz.	12	6'-6"	52	1'-5"	2'-0 1/2"	0'-4 1/2"	2'-0 1/2"	0'-4 1/2"								
*5P17	5	17	0'-3 3/4"	Horiz.	12	9'-6"	119		1'-2"	7'-2"	1'-2"									
*5P18	5	9		Horiz.	6	5'-4 1/2"	34		5'-3 3/4"						1'-3 1/4"			4'-6 1/4"	2'-8 1/4"	
*5P19	5	9		Horiz.	6	11'-10 1/2"	74		11'-9 3/4"						3'-9 1/2"			7'-8"	3'-10"	
*5P20	5	STR		Vert. e.f.	16	4'-2"	70		4'-2"											
*4P21	4	S4	0'-3 1/8"	Stirrups	8	4'-10 1/2"	26	0'-7"	1'-2"	1'-5"	1'-2"	0'-6 1/2"								
				SUBTOTAL			2776 LBS													

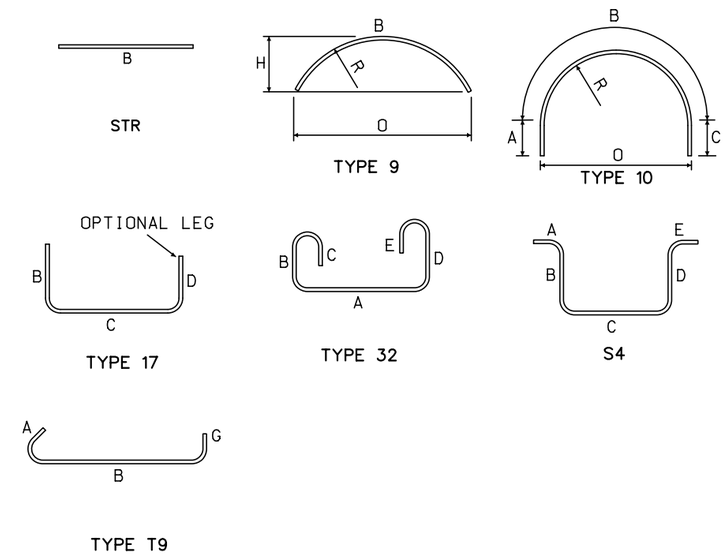

Note: Quantities are for one precast pier segment.

U.S. DEPARTMENT OF TRANSPORTATION
FEDERAL HIGHWAY ADMINISTRATION
EASTERN FEDERAL LANDS HIGHWAY DIVISION

BLUE RIDGE PARKWAY

BRIDGE OVER I-26

PIER SEGMENT PC-8 BAR LIST

NO.	DATE	BY	REVISIONS	NO.	DATE	BY	REVISIONS	DESIGNED BY	DRAWN BY	CHECKED BY	SCALE	PROJECT TEAM LEADER	BRIDGE PLAN SHEET	DATE	BRP NO.
								HC	LE	LE	No Scale	George Choubah	47 of 228	December 2018	BRP-1265

ACTUAL FILE:R47_BLRI_I26_PIER SEGMENT PC-8 BAR LIST.dgn
M:\PROJECTS_STATE_DOT\NC\blri_I26_nepa\Bridge\Microstation\Bridge Design Files\0_OPROJECTS.dgn
14-Dec-2018 12:18 PM

STATE	PROJECT	SHEET NUMBER
NC	BLRI OVER I-26	R48

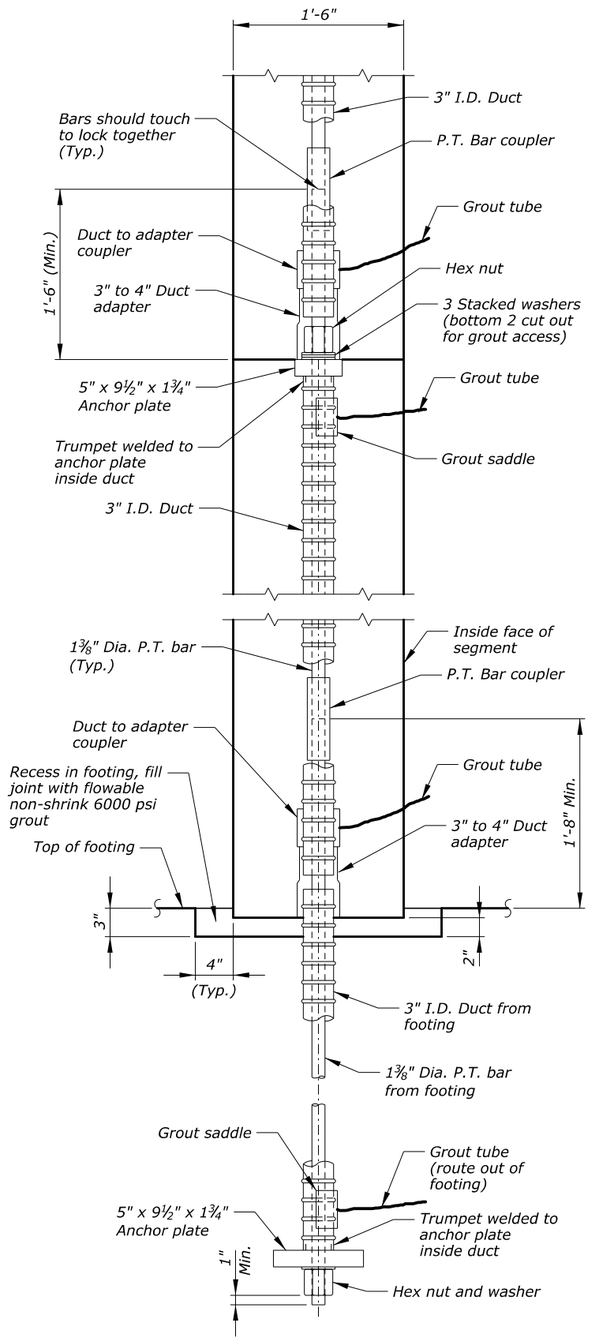

SECTION THROUGH WALL AT P.T. BAR
Scale: 1½" = 1'-0"

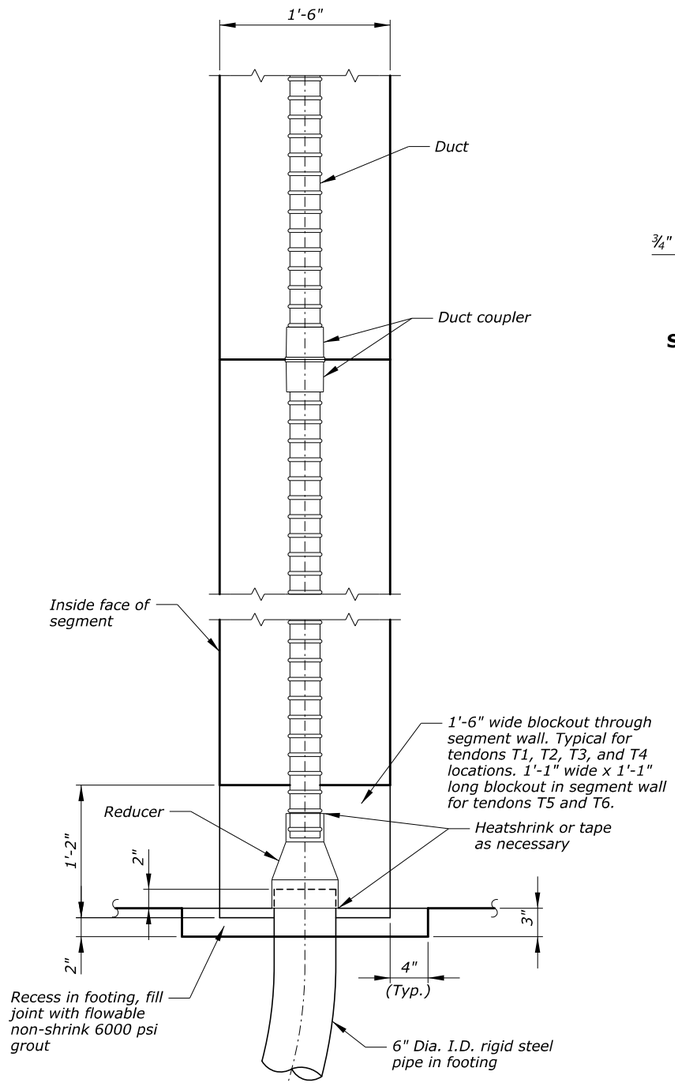

SECTION THROUGH WALL AT P.T. TENDON
Scale: 1½" = 1'-0"

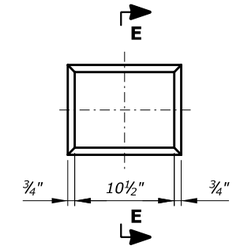

SHEAR KEY DETAIL
Scale: 1½" = 1'-0"

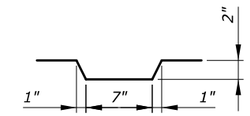

VIEW E-E
Scale: 1½" = 1'-0"

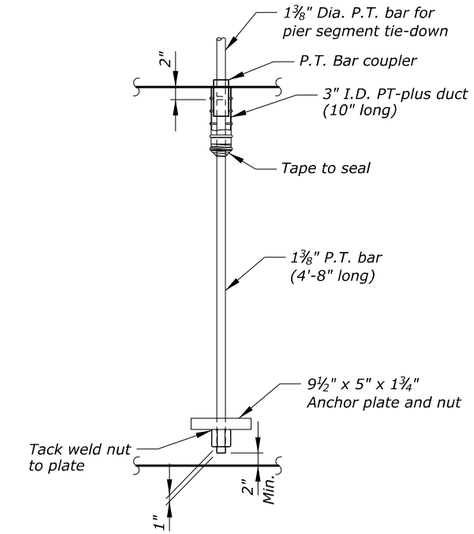

TIE-DOWN BAR ASSEMBLY DETAIL
Scale: 1" = 1'-0"

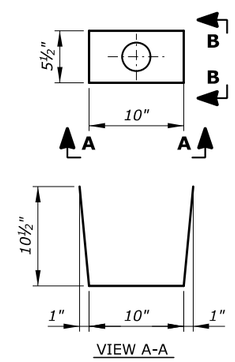

BLOCKOUT FOR P.T. BAR ANCHOR PLATE
Scale: 1½" = 1'-0"

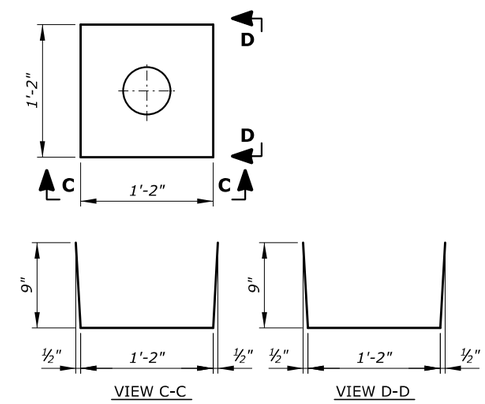

BLOCKOUT FOR P.T. TENDON ANCHOR
Scale: 1½" = 1'-0"

U.S. DEPARTMENT OF TRANSPORTATION
FEDERAL HIGHWAY ADMINISTRATION
EASTERN FEDERAL LANDS HIGHWAY DIVISION

BLUE RIDGE PARKWAY

BRIDGE OVER I-26

PIER MISCELLANEOUS DETAILS - 1

NO.	DATE	BY	REVISIONS	NO.	DATE	BY	REVISIONS	DESIGNED BY	DRAWN BY	CHECKED BY	SCALE	PROJECT TEAM LEADER	BRIDGE PLAN SHEET	DATE	BRP NO.
								HC	BK	CWN	As Shown	George Choubah	48 of 228	December 2018	BRP-1265

ACTUAL FILE:R48_BLRI_I26_PIER MISC DET 1.DGN
M:\PROJECTS_STATE_DOT\NC\blri_I26_nepo\Bridge\Microstation\Bridge Design Files\0_OPROJECTS.dgn
14-Dec-2018 12:18 PM

ACTUAL FILE:R49_BLRI_I26_PIER MISC DET 2.DGN
M:\PROJECTS_STATE_DOT\NC\blri_I26_nepa\Bridge\Microstation\Bridge Design Files\0_OPROJECTS.dgn
14-Dec-2018 12:18 PM

STATE	PROJECT	SHEET NUMBER
NC	BLRI OVER I-26	R49

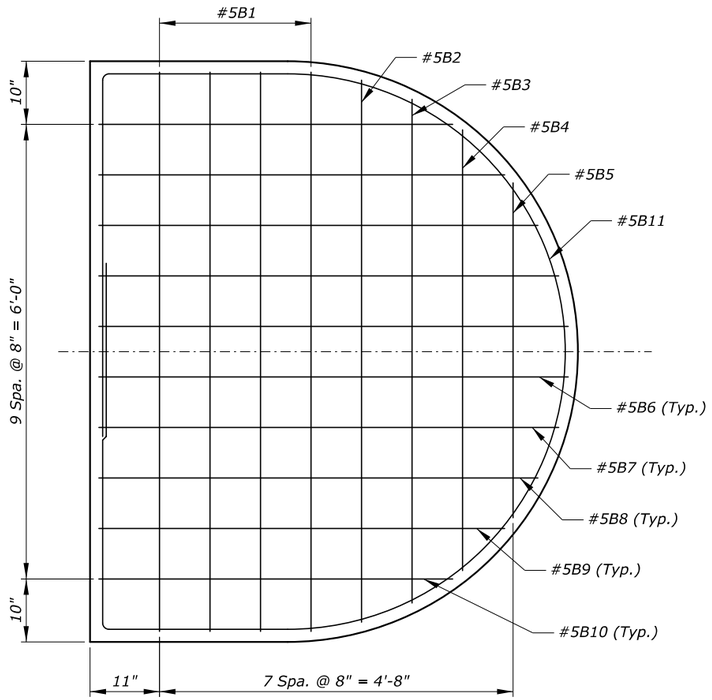

PLAN

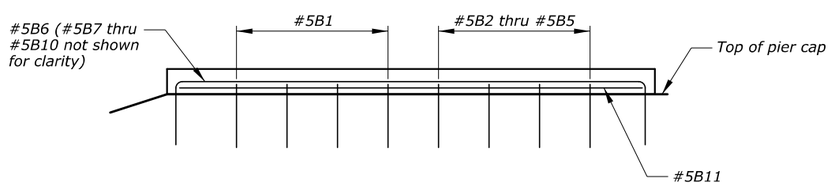

ELEVATION

BEARING PEDESTAL DETAIL

U.S. DEPARTMENT OF TRANSPORTATION
FEDERAL HIGHWAY ADMINISTRATION
EASTERN FEDERAL LANDS HIGHWAY DIVISION

BLUE RIDGE PARKWAY

BRIDGE OVER I-26

PIER MISCELLANEOUS DETAILS - 2

NO.	DATE	BY	REVISIONS	NO.	DATE	BY	REVISIONS	DESIGNED BY	DRAWN BY	CHECKED BY	SCALE	PROJECT TEAM LEADER	BRIDGE PLAN SHEET	DATE	BRP NO.
								HC	BK	CWN	1" = 1'-0"	George Choubah	49 of 228	December 2018	BRP-1265

STATE	PROJECT	SHEET NUMBER
NC	BLRI OVER I-26	R50

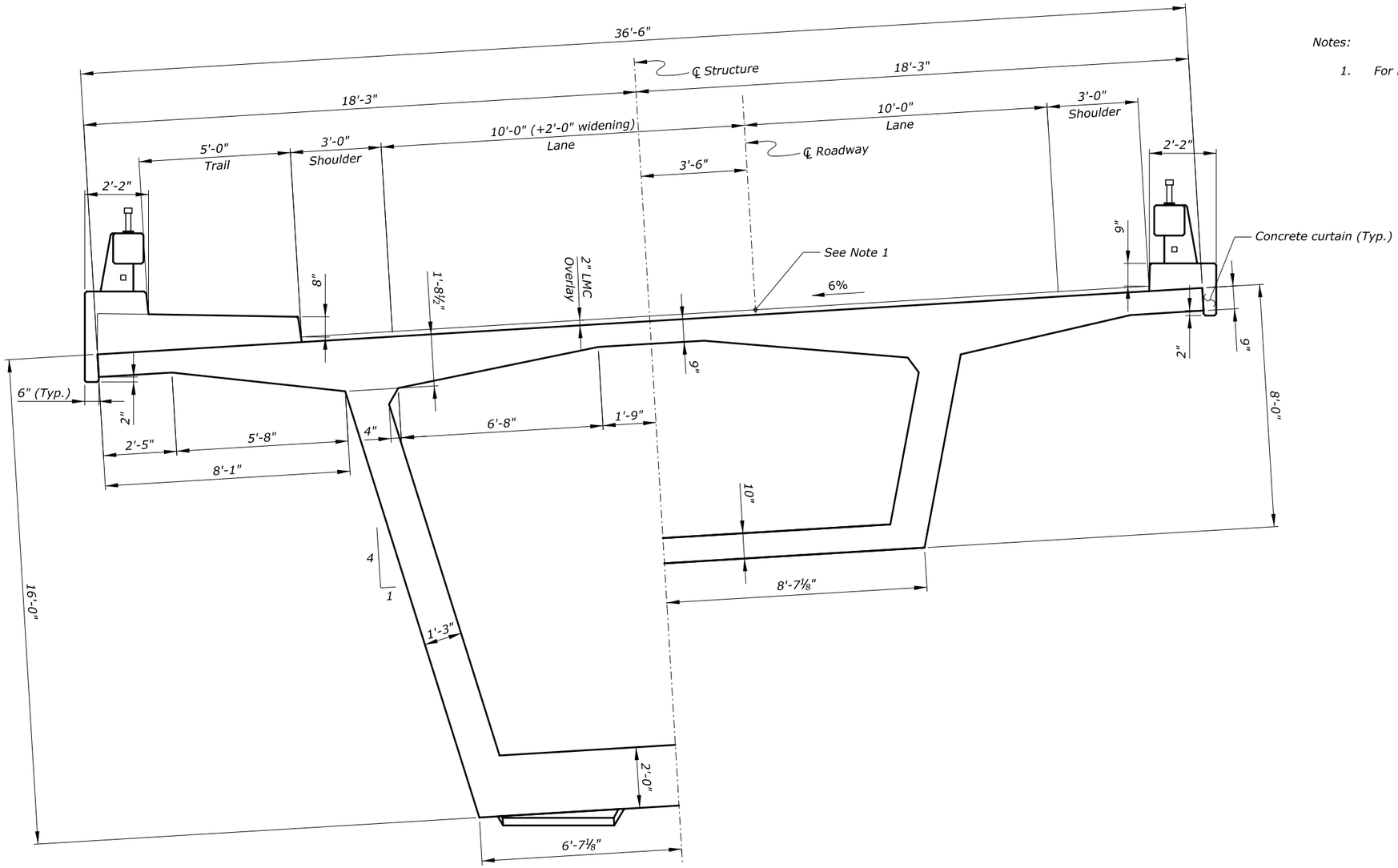

NEAR PIER

NEAR MIDSPAN AND ABUTMENTS

TYPICAL SECTION
(looking upstation)

Notes:

1. *℄ Roadway alignment is to top of 2" LMC overlay.*

Notes:

1. *For bridge rail details, see "BRIDGE RAILING - 1" sheet.*

U.S. DEPARTMENT OF TRANSPORTATION
FEDERAL HIGHWAY ADMINISTRATION
EASTERN FEDERAL LANDS HIGHWAY DIVISION

BLUE RIDGE PARKWAY

BRIDGE OVER I-26

TYPICAL SECTION

NO.	DATE	BY	REVISIONS	NO.	DATE	BY	REVISIONS	DESIGNED BY	DRAWN BY	CHECKED BY	SCALE	PROJECT TEAM LEADER	BRIDGE PLAN SHEET	DATE	BRP NO.
								AR	AR/BK	CC	½" = 1'-0"	George Choubah	50 of 228	December 2018	BRP-1265

ACTUAL FILE:R50_BLRI_I26_TYPXS.DGN
M:\PROJECTS_STATE_DOT\NC\blri_I26_nepa\Bridge\Microstation\Bridge Design Files\0_OPROJECTS.dgn
14-Dec-2018 12:18 PM

STATE	PROJECT	SHEET NUMBER
NC	BLRI OVER I-26	R51

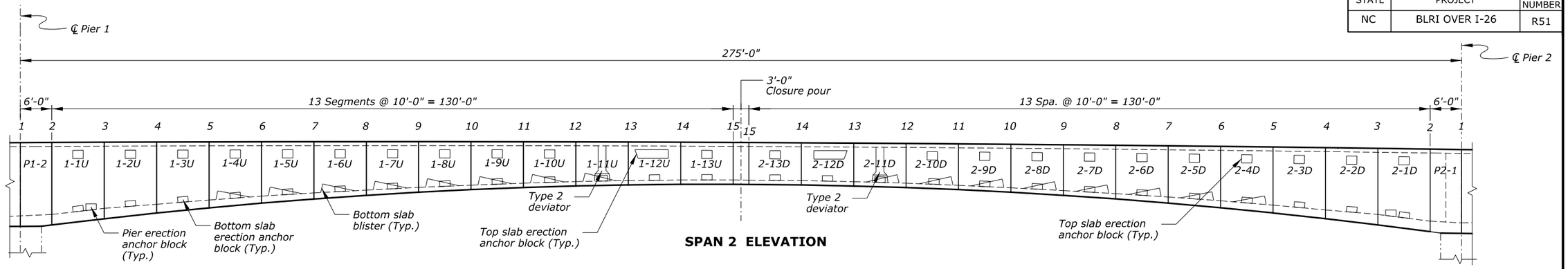

SPAN 2 ELEVATION

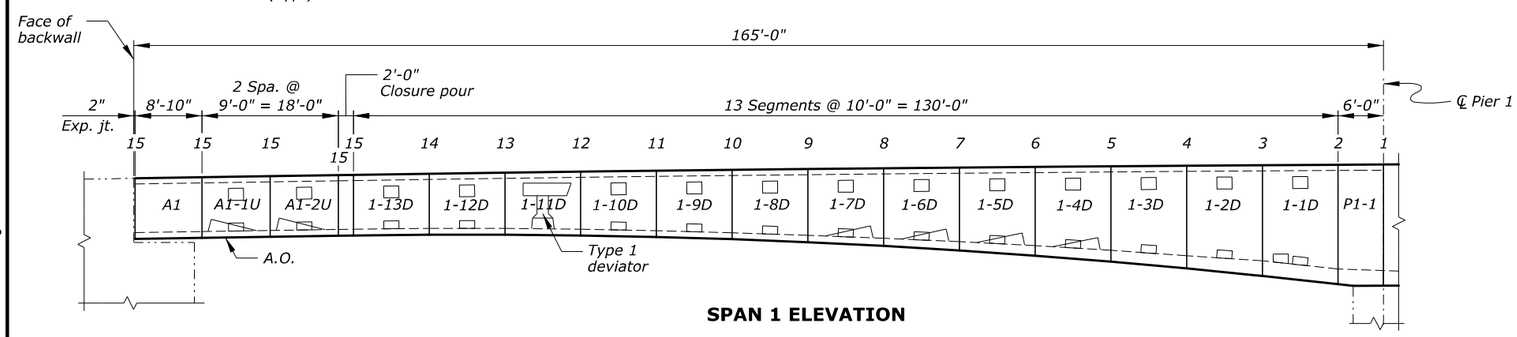

SPAN 1 ELEVATION

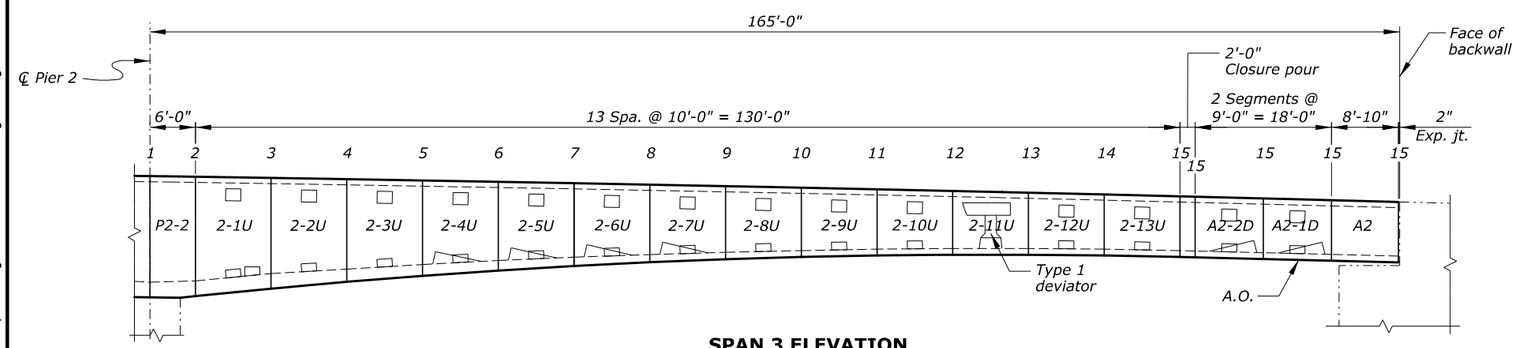

SPAN 3 ELEVATION

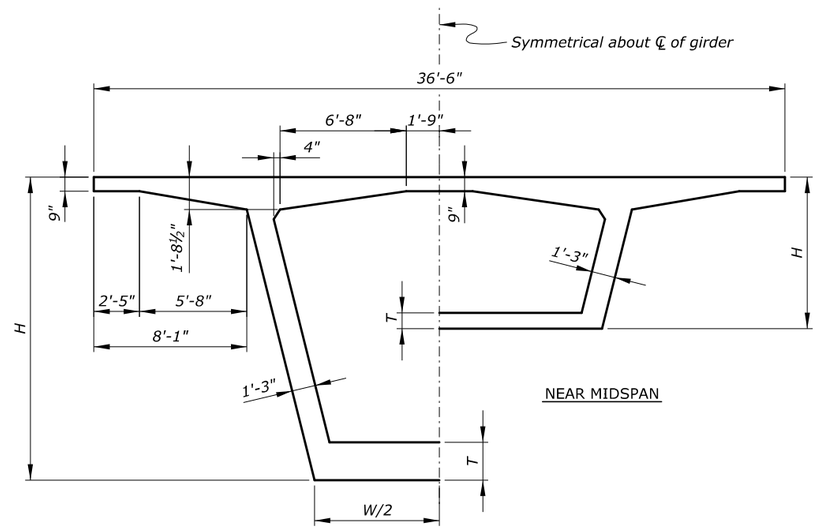

NEAR MIDSPAN

NEAR PIER

Notes:

1. Span and segment lengths shown are horizontal projections along the centerline of girder.
2. A.O. denotes Access Opening in bottom slab.
3. The expansion joint dimensions are nominal dimensions at 60° F. (See "EXPANSION JOINT" sheet for setting adjustment for temperature.)
4. Primary closure joint dimensions are nominal and will be affected by structural displacements, camber, age of segments, construction sequence, etc.

LEGEND

P2 = Pier Segment 2
A2 = Abutment Segment 2
2-2U

Cantilever Number
U = Up-station
D = Down-station
Segment Number

SECTION NO.	1	2	3	4	5	6	7	8	9	10	11	12	13	14	15
STRUCTURE DEPTH, H	16'-0"	15'-9⅛"	14'-7⅜"	13'-6⅝"	12'-7⅛"	11'-8⅝"	10'-11¼"	10'-3"	9'-7⅞"	9'-1¾"	8'-8⅞"	8'-5"	8'-2¼"	8'-0½"	8'-0"
HALF-BOTTOM SLAB WIDTH, W/2	6'-7⅛"	6'-7⅞"	6'-11 5/16"	7'-2½"	7'-5⅜"	7'-8"	7'-10 5/16"	8'-0⅜"	8'-2 3/16"	8'-3 11/16"	8'-4 15/16"	8'-5⅞"	8'-6 9/16"	8'-7"	8'-7⅛"
BOTTOM SLAB THICKNESS, T	2'-0"	2'-0"	2'-0"	1'-8"	1'-6"	1'-4"	1'-2"	1'-0"	11"	10"	10"	10"	10"	10"	10"

U.S. DEPARTMENT OF TRANSPORTATION
FEDERAL HIGHWAY ADMINISTRATION
EASTERN FEDERAL LANDS HIGHWAY DIVISION

BLUE RIDGE PARKWAY

BRIDGE OVER I-26

SEGMENT LAYOUT

NO.	DATE	BY	REVISIONS	NO.	DATE	BY	REVISIONS	DESIGNED BY	DRAWN BY	CHECKED BY	SCALE	PROJECT TEAM LEADER	BRIDGE PLAN SHEET	DATE	BRP NO.
								AR	AR/BK	CC	1" = 10'-0"	George Choubah	51 of 228	December 2018	BRP-1265

STATE	PROJECT	SHEET NUMBER
NC	BLRI OVER I-26	R52

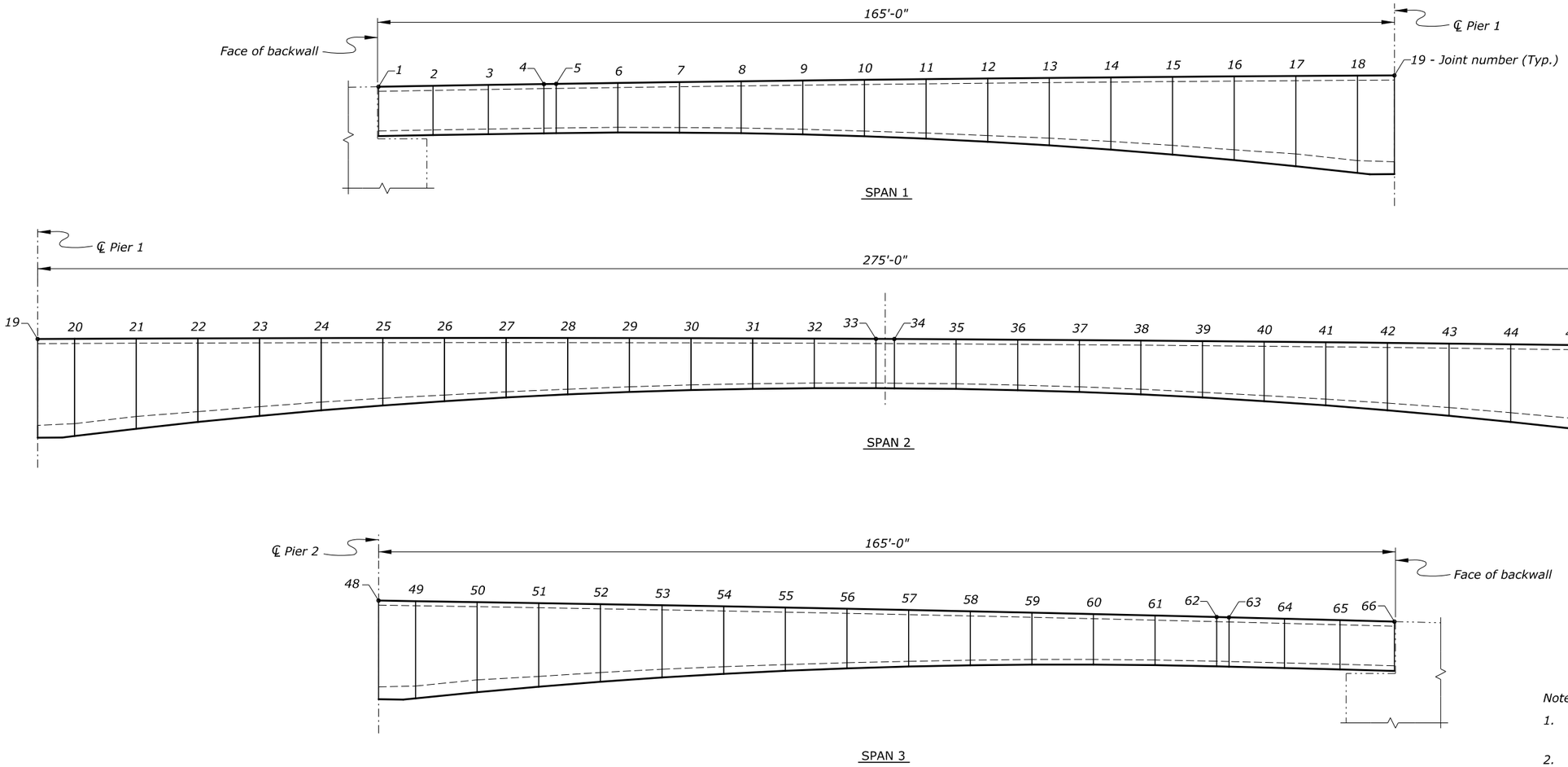

JOINT NUMBERING - ELEVATION

Scale: 1" = 10'-0"

Notes:

1. Span lengths are measured along the center line of structure.
2. Joint finished grade elevations are measured radially.
3. For joint elevations, see "TOP OF DECK ELEVATIONS - 2" sheet.

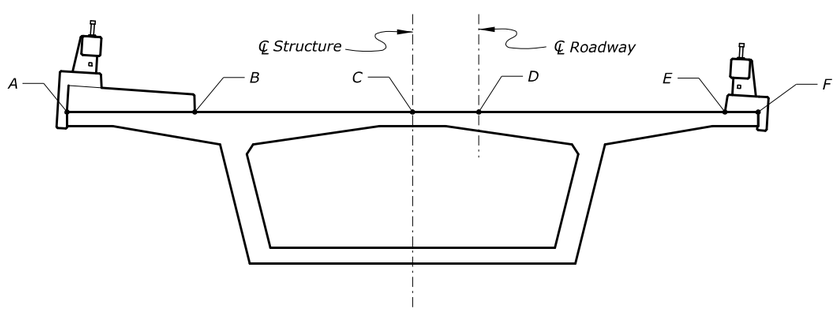

FINISHED GRADE ELEVATIONS - LOCATIONS

No Scale

U.S. DEPARTMENT OF TRANSPORTATION
FEDERAL HIGHWAY ADMINISTRATION
EASTERN FEDERAL LANDS HIGHWAY DIVISION

BLUE RIDGE PARKWAY

BRIDGE OVER I-26

TOP OF DECK ELEVATIONS - 1

NO.	DATE	BY	REVISIONS	NO.	DATE	BY	REVISIONS	DESIGNED BY	DRAWN BY	CHECKED BY	SCALE	PROJECT TEAM LEADER	BRIDGE PLAN SHEET	DATE	BRP NO.
								CWN	CWN	HC	As Shown	George Choubah	52 of 228	December 2018	BRP-1265

ACTUAL FILE:R52_BLRI_I26_TOP OF DECK ELEV - 1.DGN
M:\PROJECTS_STATE_DOT\NC\blri_I26_nepo\Bridge\Microstation\Bridge Design Files\0_0PROJECTS.dgn
14-Dec-2018 12:18 PM

SPAN 1							
JOINT NO.	STA.	LOCATION					
		A	B	C	D	E	F
1	511+83.27	2267.22	2267.62	2268.31	2268.52	2269.30	2269.40
2	511+92.12	2267.36	2267.77	2268.46	2268.67	2269.45	2269.55
3	512+01.14	2267.51	2267.91	2268.60	2268.81	2269.59	2269.69
4	512+10.16	2267.65	2268.05	2268.74	2268.95	2269.73	2269.83
5	512+12.17	2267.68	2268.08	2268.77	2268.98	2269.76	2269.86
6	512+22.19	2267.82	2268.23	2268.92	2269.13	2269.90	2270.01
7	512+32.21	2267.96	2268.37	2269.06	2269.26	2270.04	2270.15
8	512+42.24	2268.09	2268.50	2269.19	2269.40	2270.17	2270.28
9	512+52.26	2268.22	2268.62	2269.31	2269.52	2270.30	2270.40
10	512+62.28	2268.33	2268.74	2269.43	2269.64	2270.42	2270.52
11	512+72.31	2268.44	2268.85	2269.54	2269.75	2270.53	2270.63
12	512+82.33	2268.55	2268.95	2269.64	2269.85	2270.63	2270.73
13	512+92.35	2268.64	2269.05	2269.73	2269.94	2270.72	2270.83
14	513+02.38	2268.73	2269.13	2269.82	2270.03	2270.81	2270.92
15	513+12.40	2268.81	2269.21	2269.90	2270.11	2270.89	2271.00
16	513+22.42	2268.88	2269.29	2269.98	2270.19	2270.96	2271.07
17	513+32.45	2268.95	2269.35	2270.04	2270.25	2271.03	2271.14
18	513+42.47	2269.01	2269.41	2270.10	2270.31	2271.09	2271.19
19	513+48.48	2269.04	2269.44	2270.13	2270.34	2271.12	2271.23

SPAN 2							
JOINT NO.	STA.	LOCATION					
		A	B	C	D	E	F
19	513+48.48	2269.04	2269.44	2270.13	2270.34	2271.12	2271.23
20	513+54.50	2269.07	2269.47	2270.16	2270.37	2271.15	2271.26
21	513+64.52	2269.11	2269.52	2270.21	2270.42	2271.19	2271.30
22	513+74.55	2269.15	2269.55	2270.24	2270.45	2271.23	2271.33
23	513+84.57	2269.18	2269.58	2270.27	2270.48	2271.26	2271.36
24	513+94.59	2269.20	2269.60	2270.29	2270.50	2271.28	2271.38
25	514+04.62	2269.21	2269.62	2270.30	2270.51	2271.29	2271.40
26	514+14.64	2269.22	2269.62	2270.31	2270.52	2271.30	2271.40
27	514+24.66	2269.22	2269.62	2270.31	2270.52	2271.30	2271.40
28	514+34.68	2269.21	2269.61	2270.30	2270.51	2271.29	2271.40
29	514+44.71	2269.19	2269.60	2270.29	2270.50	2271.28	2271.38
30	514+54.73	2269.17	2269.58	2270.27	2270.48	2271.25	2271.36
31	514+64.75	2269.14	2269.55	2270.24	2270.45	2271.22	2271.33
32	514+74.78	2269.11	2269.51	2270.20	2270.41	2271.19	2271.29
33	514+84.80	2269.06	2269.47	2270.16	2270.36	2271.14	2271.25
34	514+87.81	2269.05	2269.45	2270.14	2270.35	2271.13	2271.23
35	514+97.83	2268.99	2269.40	2270.09	2270.30	2271.08	2271.18
36	515+07.86	2268.93	2269.34	2270.03	2270.24	2271.01	2271.12
37	515+17.88	2268.87	2269.27	2269.96	2270.17	2270.95	2271.05
38	515+27.90	2268.79	2269.19	2269.88	2270.09	2270.87	2270.98
39	515+37.93	2268.71	2269.11	2269.80	2270.01	2270.79	2270.89
40	515+47.95	2268.62	2269.02	2269.71	2269.92	2270.70	2270.80
41	515+57.97	2268.52	2268.93	2269.61	2269.82	2270.60	2270.71
42	515+67.99	2268.42	2268.82	2269.51	2269.72	2270.50	2270.60
43	515+78.02	2268.31	2268.71	2269.40	2269.61	2270.39	2270.49
44	515+88.04	2268.19	2268.59	2269.28	2269.49	2270.27	2270.37
45	515+98.06	2268.06	2268.46	2269.15	2269.36	2270.14	2270.25
46	516+08.09	2267.93	2268.33	2269.02	2269.23	2270.01	2270.11
47	516+18.11	2267.79	2268.19	2268.88	2269.09	2269.87	2269.97
48	516+24.13	2267.70	2268.10	2268.79	2269.00	2269.78	2269.88

SPAN 3							
JOINT NO.	STA.	LOCATION					
		A	B	C	D	E	F
48	516+24.13	2267.70	2268.10	2268.79	2269.00	2269.78	2269.88
49	516+30.14	2267.61	2268.01	2268.70	2268.91	2269.69	2269.79
50	516+40.16	2267.45	2267.86	2268.55	2268.75	2269.53	2269.64
51	516+50.19	2267.29	2267.69	2268.38	2268.59	2269.37	2269.47
52	516+60.21	2267.12	2267.52	2268.21	2268.42	2269.20	2269.30
53	516+70.23	2266.94	2267.34	2268.03	2268.24	2269.02	2269.13
54	516+80.26	2266.75	2267.16	2267.85	2268.06	2268.84	2268.94
55	516+90.28	2266.56	2266.97	2267.65	2267.86	2268.64	2268.75
56	517+00.30	2266.36	2266.77	2267.45	2267.66	2268.44	2268.55
57	517+10.33	2266.15	2266.56	2267.25	2267.46	2268.24	2268.34
58	517+20.35	2265.94	2266.34	2267.03	2267.24	2268.02	2268.13
59	517+30.37	2265.72	2266.12	2266.81	2267.02	2267.80	2267.90
60	517+40.40	2265.49	2265.89	2266.58	2266.79	2267.57	2267.68
61	517+50.42	2265.25	2265.66	2266.35	2266.56	2267.33	2267.44
62	517+60.44	2265.01	2265.41	2266.10	2266.31	2267.09	2267.20
63	517+62.45	2264.96	2265.36	2266.05	2266.26	2267.04	2267.15
64	517+71.47	2264.73	2265.14	2265.83	2266.04	2266.81	2266.92
65	517+80.49	2264.50	2264.91	2265.59	2265.80	2266.58	2266.69
66	517+89.34	2264.27	2264.67	2265.36	2265.57	2266.35	2266.45

U.S. DEPARTMENT OF TRANSPORTATION
FEDERAL HIGHWAY ADMINISTRATION
EASTERN FEDERAL LANDS HIGHWAY DIVISION

BLUE RIDGE PARKWAY

BRIDGE OVER I-26

TOP OF DECK ELEVATIONS - 2

NO.	DATE	BY	REVISIONS	NO.	DATE	BY	REVISIONS

DESIGNED BY	DRAWN BY	CHECKED BY	SCALE	PROJECT TEAM LEADER	BRIDGE PLAN SHEET	DATE	BRP NO.
CWN	CC	HC	No Scale	George Choubah	53 of 228	December 2018	BRP-1265

ACTUAL FILE:R53_BLRI_I26_TOP OF DECK ELEV - 2.DGN
M:\PROJECTS_STATE_DOT\NC\blri_I26_nepa\Bridge\Microstation\Bridge Design Files\0_OPROJECTS.dgn
14-Dec-2018 12:18 PM

STATE	PROJECT	SHEET NUMBER
NC	BLRI OVER I-26	R54

SPAN 1

Joint Number	Coordinate Direction	Left Bolt	℄ Bulkhead	Right Bolt
Joint 1	X	938865.852	938865.087	938864.322
	Y	654509.730	654500.779	654491.828
	Z	2267.769	2268.309	2268.849
Joint 2	X	938874.602	938873.890	938873.178
	Y	654509.009	654500.053	654491.097
	Z	2267.917	2268.457	2268.997
Joint 3	X	938883.522	938882.864	938882.206
	Y	654508.326	654499.367	654490.407
	Z	2268.062	2268.602	2269.142
Joint 4	X	938892.446	938891.842	938891.238
	Y	654507.698	654498.734	654489.771
	Z	2268.201	2268.741	2269.281
Joint 5	X	938894.430	938893.838	938893.245
	Y	654507.566	654498.601	654489.637
	Z	2268.231	2268.771	2269.311
Joint 6	X	938904.350	938903.818	938903.286
	Y	654506.944	654497.976	654489.007
	Z	2268.376	2268.916	2269.456
Joint 7	X	938914.275	938913.802	938913.330
	Y	654506.388	654497.416	654488.445
	Z	2268.515	2269.055	2269.595
Joint 8	X	938924.203	938923.790	938923.378
	Y	654505.898	654496.924	654487.950
	Z	2268.646	2269.186	2269.726
Joint 9	X	938934.134	938933.781	938933.429
	Y	654505.475	654496.498	654487.522
	Z	2268.771	2269.311	2269.851
Joint 10	X	938944.067	938943.775	938943.482
	Y	654505.119	654496.140	654487.161
	Z	2268.887	2269.427	2269.967
Joint 11	X	938954.003	938953.771	938953.538
	Y	654504.828	654495.848	654486.867
	Z	2268.997	2269.537	2270.077
Joint 12	X	938963.940	938963.768	938963.596
	Y	654504.604	654495.622	654486.640
	Z	2269.099	2269.639	2270.179
Joint 13	X	938973.879	938973.767	938973.654
	Y	654504.447	654495.464	654486.481
	Z	2269.195	2269.735	2270.275
Joint 14	X	938983.819	938983.766	938983.714
	Y	654504.356	654495.372	654486.389
	Z	2269.282	2269.822	2270.362
Joint 15	X	938993.759	938993.766	938993.774
	Y	654504.331	654495.347	654486.364
	Z	2269.363	2269.903	2270.443
Joint 16	X	939003.699	939003.766	939003.834
	Y	654504.373	654495.389	654486.406
	Z	2269.436	2269.976	2270.516
Joint 17	X	939013.638	939013.766	939013.894
	Y	654504.481	654495.498	654486.515
	Z	2269.503	2270.043	2270.583
Joint 18	X	939023.576	939023.764	939023.952
	Y	654504.656	654495.674	654486.692
	Z	2269.561	2270.101	2270.641

SPAN 2

Joint Number	Coordinate Direction	Left Bolt	℄ Bulkhead	Right Bolt
Joint 19	X	939029.539	939029.763	939029.986
	Y	654504.792	654495.811	654486.830
	Z	2269.593	2270.133	2270.673
Joint 20	X	939035.501	939035.760	939036.020
	Y	654504.953	654495.973	654486.993
	Z	2269.622	2270.162	2270.702
Joint 21	X	939045.435	939045.755	939046.075
	Y	654505.274	654496.295	654487.317
	Z	2269.665	2270.205	2270.745
Joint 22	X	939055.368	939055.748	939056.128
	Y	654505.661	654496.685	654487.709
	Z	2269.701	2270.241	2270.781
Joint 23	X	939065.298	939065.737	939066.177
	Y	654506.114	654497.141	654488.168
	Z	2269.730	2270.270	2270.810
Joint 24	X	939075.224	939075.724	939076.223
	Y	654506.634	654497.664	654488.694
	Z	2269.751	2270.291	2270.831
Joint 25	X	939085.147	939085.706	939086.266
	Y	654507.220	654498.254	654489.287
	Z	2269.765	2270.305	2270.845
Joint 26	X	939095.065	939095.685	939096.304
	Y	654507.872	654498.910	654489.947
	Z	2269.771	2270.311	2270.851
Joint 27	X	939104.979	939105.659	939106.338
	Y	654508.591	654499.633	654490.675
	Z	2269.771	2270.311	2270.851
Joint 28	X	939114.888	939115.627	939116.367
	Y	654509.376	654500.422	654491.469
	Z	2269.763	2270.303	2270.843
Joint 29	X	939124.792	939125.591	939126.390
	Y	654510.227	654501.279	654492.330
	Z	2269.748	2270.288	2270.828
Joint 30	X	939134.689	939135.548	939136.407
	Y	654511.144	654502.201	654493.259
	Z	2269.726	2270.266	2270.806
Joint 31	X	939144.580	939145.499	939146.418
	Y	654512.127	654503.191	654494.254
	Z	2269.696	2270.236	2270.776
Joint 32	X	939154.465	939155.443	939156.422
	Y	654513.177	654504.246	654495.316
	Z	2269.659	2270.199	2270.739
Joint 33	X	939164.342	939165.380	939166.418
	Y	654514.292	654505.369	654496.445
	Z	2269.615	2270.155	2270.695

SPAN 2

Joint Number	Coordinate Direction	Left Bolt	℄ Bulkhead	Right Bolt
Joint 34	X	939167.304	939168.360	939169.415
	Y	654514.640	654505.718	654496.797
	Z	2269.600	2270.140	2270.680
Joint 35	X	939177.171	939178.286	939179.402
	Y	654515.841	654506.927	654498.012
	Z	2269.547	2270.087	2270.627
Joint 36	X	939187.030	939188.205	939189.380
	Y	654517.108	654508.201	654499.295
	Z	2269.486	2270.026	2270.566
Joint 37	X	939196.880	939198.115	939199.349
	Y	654518.441	654509.542	654500.644
	Z	2269.418	2269.958	2270.498
Joint 38	X	939206.721	939208.015	939209.309
	Y	654519.840	654510.950	654502.059
	Z	2269.343	2269.883	2270.423
Joint 39	X	939216.553	939217.906	939219.259
	Y	654521.304	654512.423	654503.542
	Z	2269.260	2269.800	2270.340
Joint 40	X	939226.374	939227.787	939229.199
	Y	654522.834	654513.962	654505.090
	Z	2269.171	2269.711	2270.251
Joint 41	X	939236.185	939237.657	939239.129
	Y	654524.430	654515.568	654506.705
	Z	2269.074	2269.614	2270.154
Joint 42	X	939245.985	939247.516	939249.048
	Y	654526.091	654517.239	654508.387
	Z	2268.969	2269.509	2270.049
Joint 43	X	939255.774	939257.364	939258.955
	Y	654527.818	654518.976	654510.134
	Z	2268.858	2269.398	2269.938
Joint 44	X	939265.551	939267.201	939268.850
	Y	654529.610	654520.779	654511.948
	Z	2268.739	2269.279	2269.819
Joint 45	X	939275.316	939277.024	939278.733
	Y	654531.468	654522.648	654513.828
	Z	2268.613	2269.153	2269.693
Joint 46	X	939285.069	939286.836	939288.603
	Y	654533.390	654524.582	654515.774
	Z	2268.480	2269.020	2269.560
Joint 47	X	939294.808	939296.634	939298.460
	Y	654535.378	654526.582	654517.785
	Z	2268.340	2268.880	2269.420
Joint 48	X	939300.645	939302.506	939304.367
	Y	654536.602	654527.813	654519.024
	Z	2268.252	2268.792	2269.332

SPAN 3

Joint Number	Coordinate Direction	Left Bolt	℄ Bulkhead	Right Bolt
Joint 49	X	939306.477	939308.373	939310.270
	Y	654537.849	654529.068	654520.286
	Z	2268.161	2268.701	2269.241
Joint 50	X	939316.186	939318.141	939320.096
	Y	654539.980	654531.211	654522.443
	Z	2268.005	2268.545	2269.085
Joint 51	X	939325.880	939327.894	939329.908
	Y	654542.175	654533.420	654524.665
	Z	2267.841	2268.381	2268.921
Joint 52	X	939335.560	939337.632	939339.704
	Y	654544.435	654535.694	654526.952
	Z	2267.670	2268.210	2268.750
Joint 53	X	939345.224	939347.355	939349.485
	Y	654546.760	654538.033	654529.305
	Z	2267.492	2268.032	2268.572
Joint 54	X	939354.873	939357.062	939359.250
	Y	654549.150	654540.437	654531.723
	Z	2267.307	2267.847	2268.387
Joint 55	X	939364.505	939366.752	939368.999
	Y	654551.603	654542.905	654534.207
	Z	2267.114	2267.654	2268.194
Joint 56	X	939374.121	939376.426	939378.731
	Y	654554.122	654545.438	654536.755
	Z	2266.914	2267.454	2267.994
Joint 57	X	939383.720	939386.083	939388.445
	Y	654556.704	654548.036	654539.369
	Z	2266.707	2267.247	2267.787
Joint 58	X	939393.301	939395.722	939398.142
	Y	654559.350	654550.699	654542.047
	Z	2266.493	2267.033	2267.573
Joint 59	X	939402.864	939405.343	939407.821
	Y	654562.061	654553.425	654544.790
	Z	2266.271	2266.811	2267.351
Joint 60	X	939412.409	939414.945	939417.482
	Y	654564.835	654556.216	654547.598
	Z	2266.042	2266.582	2267.122
Joint 61	X	939421.936	939424.529	939427.123
	Y	654567.673	654559.072	654550.470
	Z	2265.806	2266.346	2266.886
Joint 62	X	939431.443	939434.094	939436.745
	Y	654570.574	654561.991	654553.407
	Z	2265.562	2266.102	2266.642
Joint 63	X	939433.342	939436.004	939438.667
	Y	654571.162	654562.582	654554.002
	Z	2265.513	2266.053	2266.593
Joint 64	X	939441.878	939444.592	939447.306
	Y	654573.839	654565.275	654556.711
	Z	2265.286	2265.826	2266.366
Joint 65	X	939450.398	939453.163	939455.929
	Y	654576.568	654568.020	654559.472
	Z	2265.054	2265.594	2266.134
Joint 66	X	939458.743	939461.559	939464.375
	Y	654579.295	654570.764	654562.233
	Z	2264.820	2265.360	2265.900

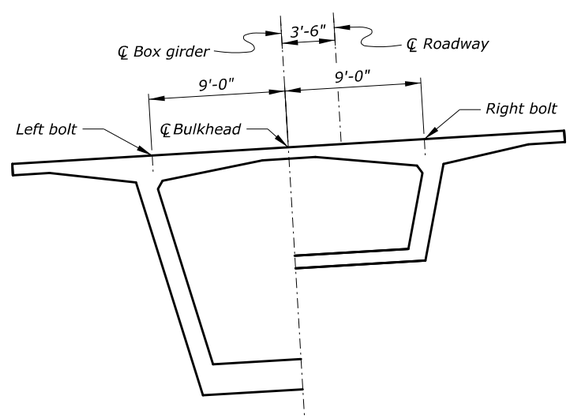

CROSS SECTION

Notes:

1. *Superelevations of the projected station of the joint are applied radially.*
2. *For joint number locations, see "TOP OF DECK ELEVATIONS - 1" sheet.*

U.S. DEPARTMENT OF TRANSPORTATION
FEDERAL HIGHWAY ADMINISTRATION
EASTERN FEDERAL LANDS HIGHWAY DIVISION

BLUE RIDGE PARKWAY

BRIDGE OVER I-26

JOINT COORDINATES

NO.	DATE	BY	REVISIONS	NO.	DATE	BY	REVISIONS	DESIGNED BY	DRAWN BY	CHECKED BY	SCALE	PROJECT TEAM LEADER	BRIDGE PLAN SHEET	DATE	BRP NO.
								CWN	CWN	HC	No Scale	George Choubah	54 of 228	December 2018	BRP-1265

ACTUAL FILE:R54_BLRI_I26_JOINT_COORDINATES.dgn
M:\PROJECTS_STATE_DOT\NC\blri_I26_nepo\Bridge\Microstation\Bridge Design Files\0_OPROJECTS.dgn
14-Dec-2018 12:18 PM

STATE	PROJECT	SHEET NUMBER
NC	BLRI OVER I-26	R55

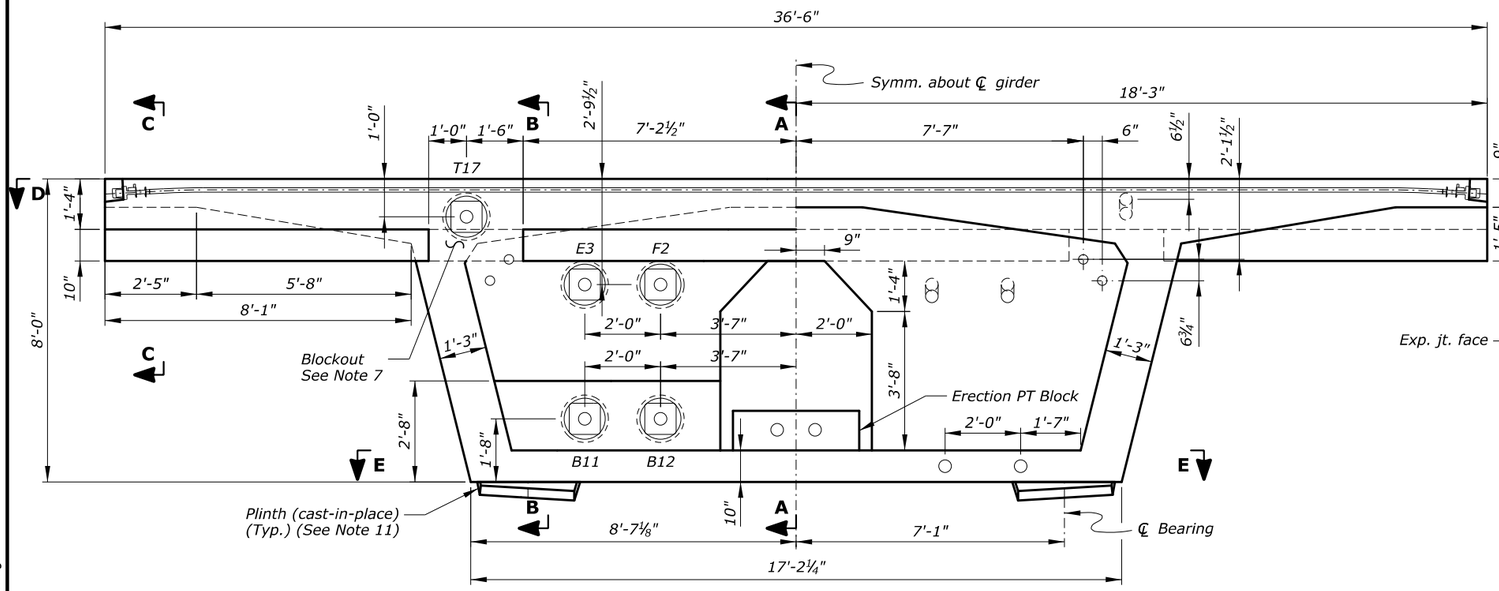

HALF SECTION - LOOKING TOWARDS PIER

HALF SECTION - LOOKING TOWARDS ABUTMENT

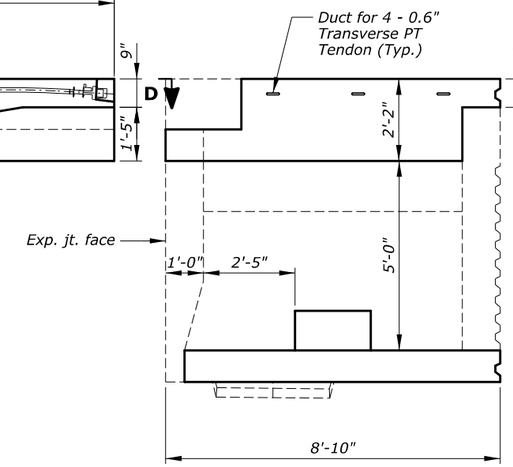

SECTION A-A

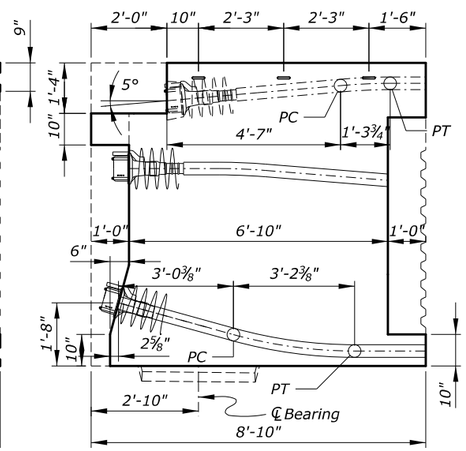

SECTION B-B

ABUTMENT SEGMENT

(Segment A1 shown, Segment A2 similar)

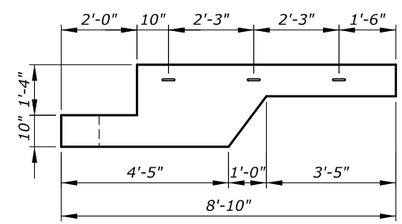

SECTION C-C

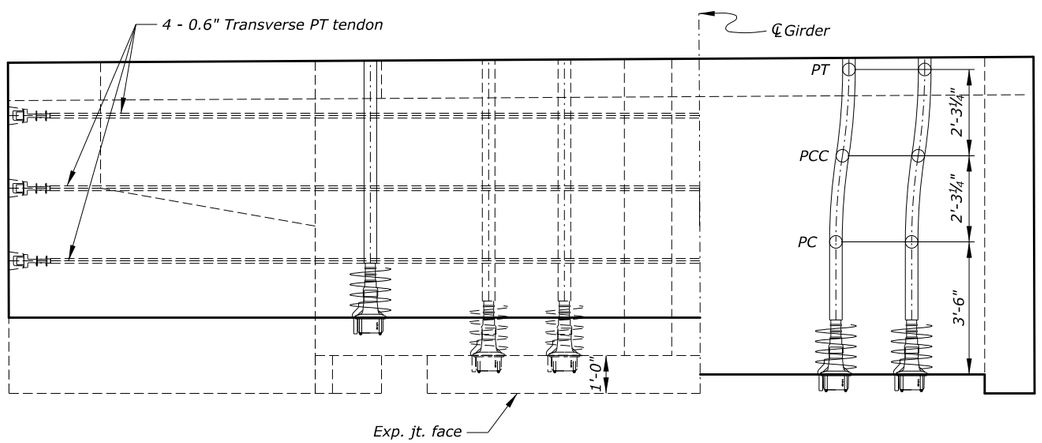

SECTION D-D
HALF - TOP SLAB PLAN

SECTION E-E
HALF - BOTTOM SLAB PLAN

Upstation (Abutment 1)
Downstation (Abutment 2)

Notes:

1. *Dimensions shown are along ℄ girder.*
2. *See "ERECTION PT BAR DETAILS" sheet for top and bottom erection PT locations and details.*
3. *See "BULKHEAD DETAILS" sheet for duct and shear key locations.*
4. *See "BEARING DETAILS" sheet for embedded bearing recesses.*
5. *See "EXPANSION JOINT DETAILS - 1" and "EXPANSION JOINT DETAILS - 2" sheets for expansion joint details.*
6. *For information on reinforcement in erection post-tensioning anchor blocks, see "ERECTION ANCHOR BLOCK" sheet.*
7. *Area to be poured back after longitudinal tendon stressing operations are complete, and temporary PT bars are removed.*
8. *See "TRANSVERSE POST-TENSIONING DETAILS" sheet for details and location of transverse tendons.*
9. *See "ABUTMENT ACCESS OPENING DETAILS" sheet for details and location of the abutment access opening.*
10. *For information on tendon curvature of external and future tendons, see "EXTERNAL TENDON CURVATURE DETAILS" sheet.*
11. *Plinths shown on this sheet are schematic and not to scale.*
12. *The curve radius for internal tendons is 15'-0", unless otherwise noted.*

U.S. DEPARTMENT OF TRANSPORTATION
FEDERAL HIGHWAY ADMINISTRATION
EASTERN FEDERAL LANDS HIGHWAY DIVISION

BLUE RIDGE PARKWAY

BRIDGE OVER I-26

ABUTMENT SEGMENT DIMENSIONS

NO.	DATE	BY	REVISIONS	NO.	DATE	BY	REVISIONS	DESIGNED BY	DRAWN BY	CHECKED BY	SCALE	PROJECT TEAM LEADER	BRIDGE PLAN SHEET	DATE	BRP NO.
								CC	BK/CC	HC	½" = 1'-0"	George Choubah	55 of 228	December 2018	BRP-1265

ACTUAL FILE:R55_BLRI_I26_ABUT SEGMENT DIM.DGN
M:\PROJECTS_STATE_DOT\NC\blri_I26_nepo\Bridge\Microstation\Bridge Design Files\0_OPROJECTS.dgn
14-Dec-2018 12:18 PM

STATE	PROJECT	SHEET NUMBER
NC	BLRI OVER I-26	R56

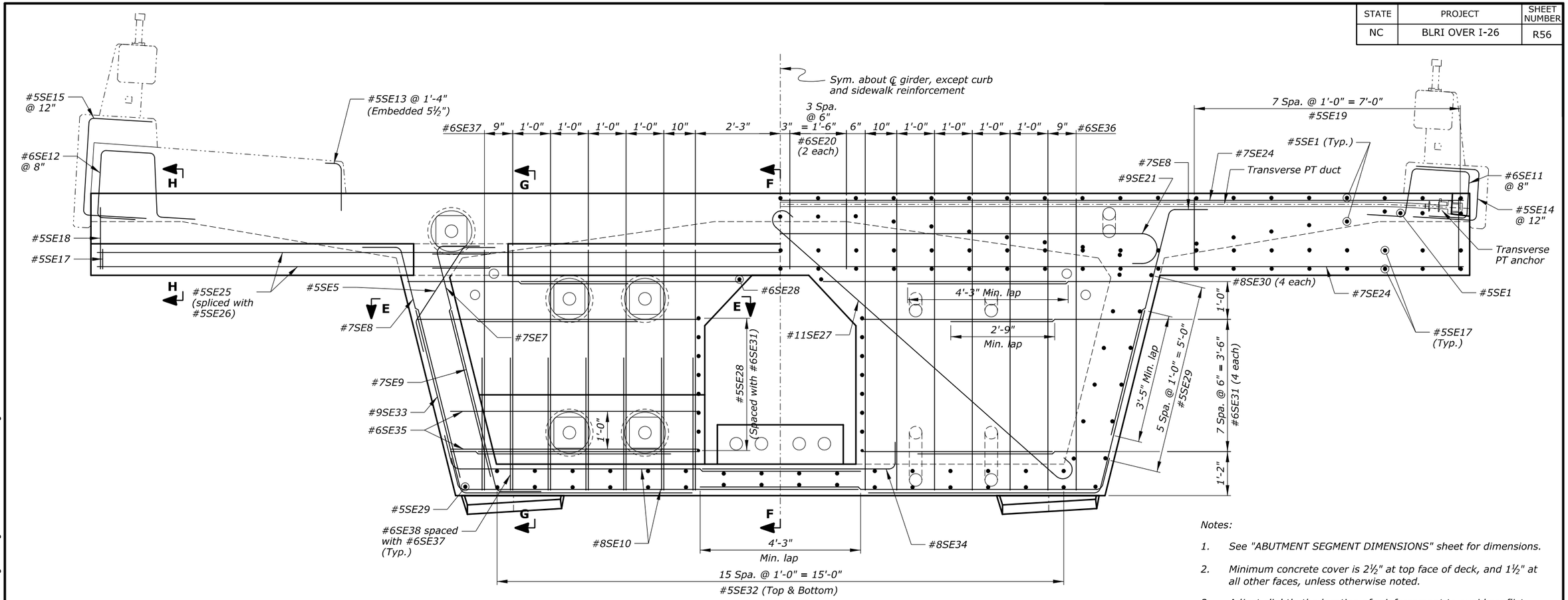

Notes:

1. See "ABUTMENT SEGMENT DIMENSIONS" sheet for dimensions.
2. Minimum concrete cover is 2½" at top face of deck, and 1½" at all other faces, unless otherwise noted.
3. Adjust slightly the location of reinforcement to avoid conflict with post-tensioning ducts.

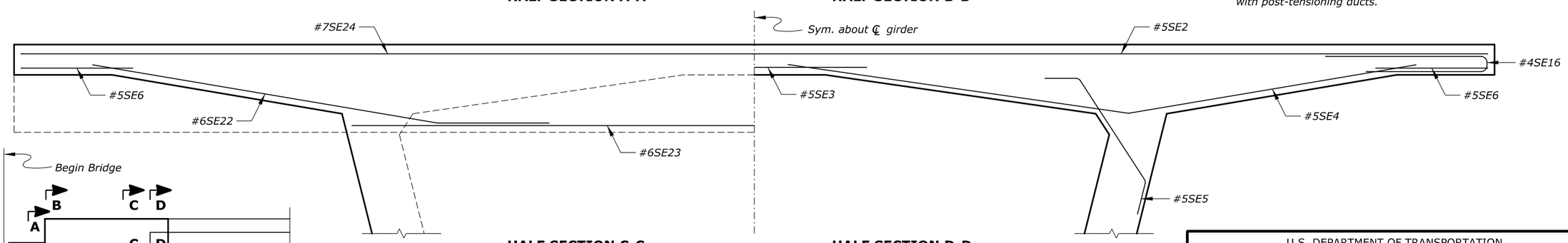

HALF SECTION C-C
Web bars and rail bars not shown for clarity

HALF SECTION D-D
Web bars and rail bars not shown for clarity

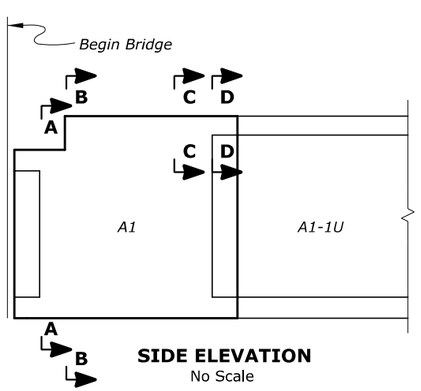

SIDE ELEVATION
No Scale

U.S. DEPARTMENT OF TRANSPORTATION
FEDERAL HIGHWAY ADMINISTRATION
EASTERN FEDERAL LANDS HIGHWAY DIVISION

BLUE RIDGE PARKWAY

BRIDGE OVER I-26

SEGMENT A1 REINFORCEMENT - 1

NO.	DATE	BY	REVISIONS	NO.	DATE	BY	REVISIONS	DESIGNED BY	DRAWN BY	CHECKED BY	SCALE	PROJECT TEAM LEADER	BRIDGE PLAN SHEET	DATE	BRP NO.
								CC	BK	HC	¾" = 1'-0"	George Choubah	56 of 228	December 2018	BRP-1265

ACTUAL FILE:R56_BLRI_I26_SEGMENT A1 REINF - 1.DGN
M:\PROJECTS_STATE_DOT\WC\blri_I26_nepa\Bridge\Microstation\Bridge Design Files\0_OPROJECTS.dgn
14-Dec-2018 12:18 PM

STATE	PROJECT	SHEET NUMBER
NC	BLRI OVER I-26	R57

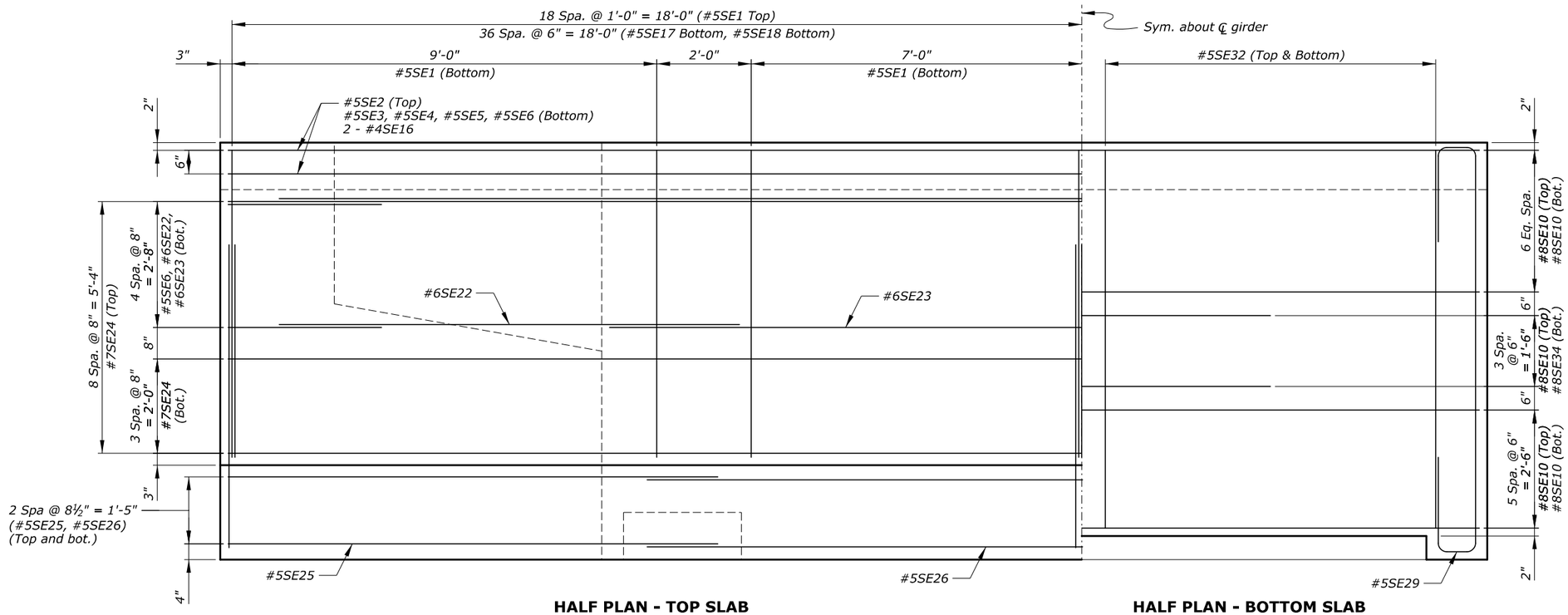

HALF PLAN - TOP SLAB

HALF PLAN - BOTTOM SLAB

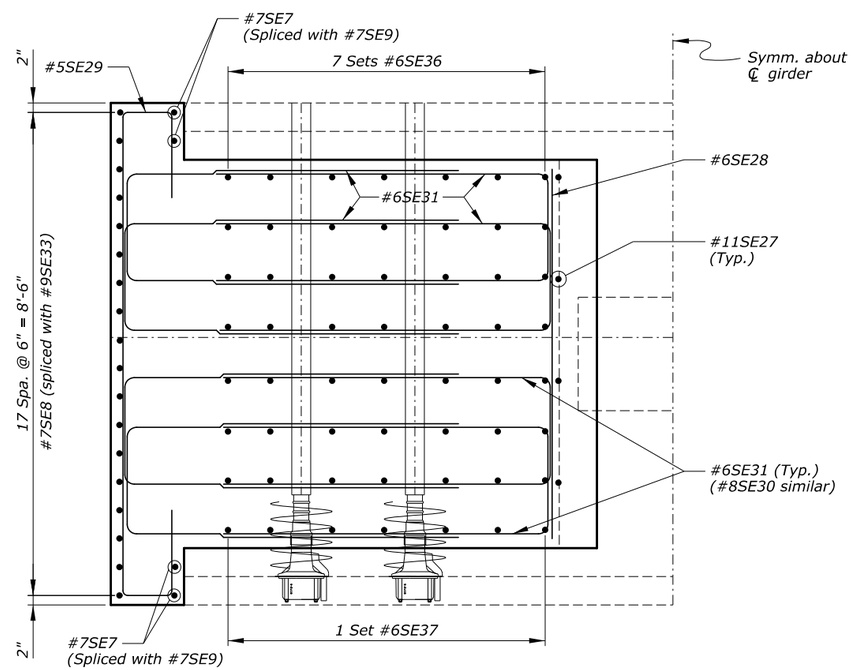

SECTION E-E

Notes:

1. *For section locations, see "SEGMENT A1 REINFORCEMENT - 1" sheet.*
2. *Minimum concrete cover is 2½" at top face of deck, and 1½" at all other faces, unless otherwise noted.*
3. *Adjust slightly the location of reinforcement to avoid conflict with post-tensioning ducts.*

U.S. DEPARTMENT OF TRANSPORTATION
FEDERAL HIGHWAY ADMINISTRATION
EASTERN FEDERAL LANDS HIGHWAY DIVISION

BLUE RIDGE PARKWAY

BRIDGE OVER I-26

SEGMENT A1 REINFORCEMENT - 2

NO.	DATE	BY	REVISIONS	NO.	DATE	BY	REVISIONS	DESIGNED BY	DRAWN BY	CHECKED BY	SCALE	PROJECT TEAM LEADER	BRIDGE PLAN SHEET	DATE	BRP NO.
								CC	BK	HC	¾" = 1'-0"	George Choubah	57 of 228	December 2018	BRP-1265

ACTUAL FILE:R57_BLRI_I26_SEGMENT A1 REINF - 2.DGN
M:\PROJECTS_STATE_DOT\NC\blri_I26_nepa\Bridge\Microstation\Bridge Design Files\0_OPROJECTS.dgn
14-Dec-2018 12:18 PM

STATE	PROJECT	SHEET NUMBER
NC	BLRI OVER I-26	R58

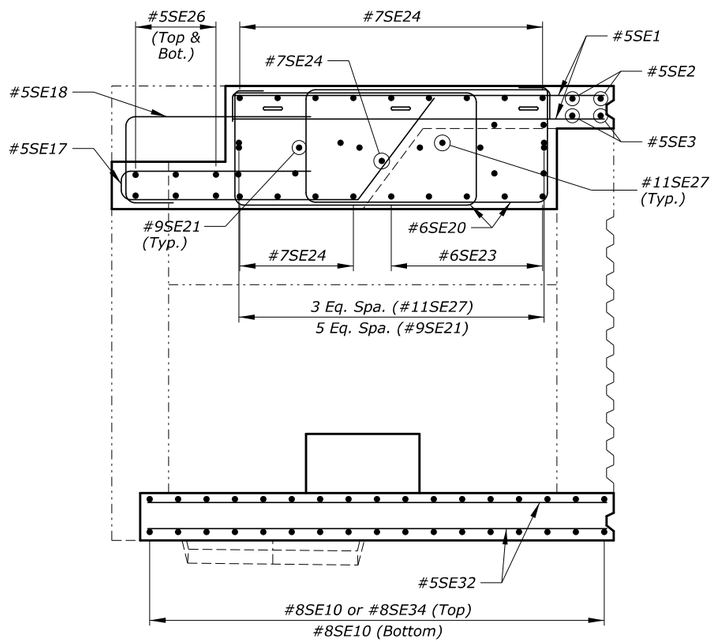

SECTION F-F

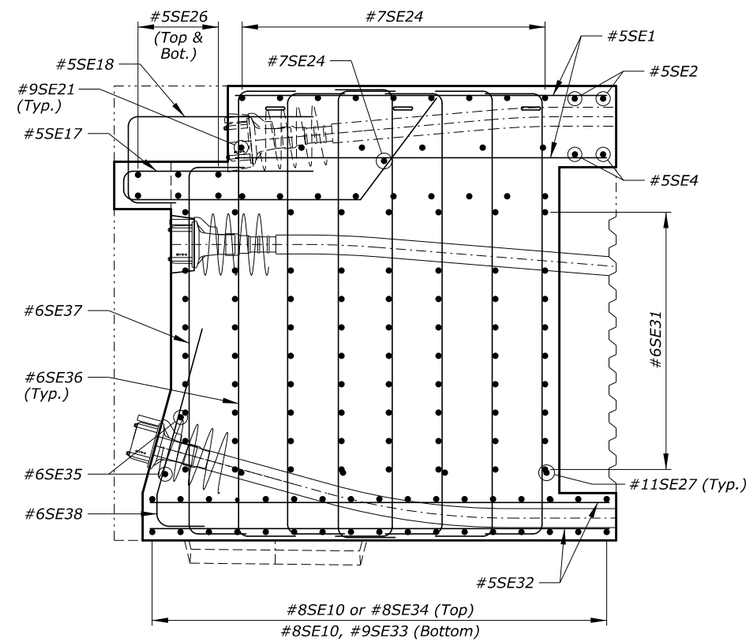

SECTION G-G

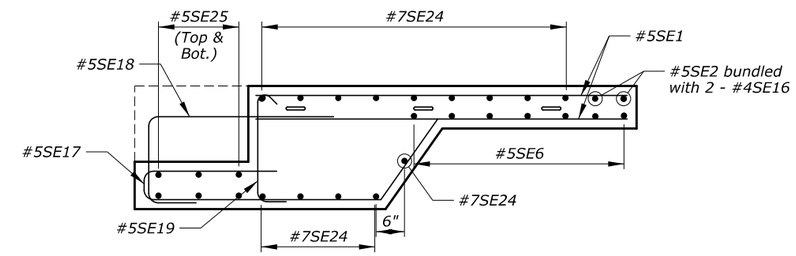

SECTION H-H

Notes:

1. *For section locations, see "SEGMENT A1 REINFORCEMENT - 1" sheet.*
2. *Minimum concrete cover is 2½" at top face of deck, and 1½" at all other faces, unless otherwise noted.*
3. *Adjust slightly the location of reinforcement to avoid conflict with post-tensioning ducts.*

U.S. DEPARTMENT OF TRANSPORTATION
FEDERAL HIGHWAY ADMINISTRATION
EASTERN FEDERAL LANDS HIGHWAY DIVISION

BLUE RIDGE PARKWAY

BRIDGE OVER I-26

SEGMENT A1 REINFORCEMENT - 3

NO.	DATE	BY	REVISIONS	NO.	DATE	BY	REVISIONS	DESIGNED BY	DRAWN BY	CHECKED BY	SCALE	PROJECT TEAM LEADER	BRIDGE PLAN SHEET	DATE	BRP NO.
								CC	BK	HC	¾" = 1'-0"	George Choubah	58 of 228	December 2018	BRP-1265

ACTUAL FILE:R58_BLRI_I26_SEGMENT A1 REINF - 3.DGN
M:\PROJECTS_STATE_DOT\NC\blri_I26_repo\Bridge\Microstation\Bridge Design Files\0_0PROJECTS.dgn
14-Dec-2018 12:18 PM

STATE	PROJECT	SHEET NUMBER
NC	BLRI OVER I-26	R59

REINFORCING STEEL SCHEDULE — DIMENSION TABLE

SEGMENT A1 BAR LIST

BAR MK	SIZE	TYPE	PIN SZ	LOCATION	QTY	LENGTH	WEIGHT	A	B	C	D	E	F	G	H	J	K	O	R	V or N
*5SE1	5	STR		Long. top	76	6′-6″	515		6′-6″											
*5SE2	5	STR		Trans. top	2	36′-2″	75		36′-2″											
*5SE3	5	STR		Trans. top	2	6′-0″	13		6′-0″											
*5SE4	5	52	0′-3¾″	Trans. top	4	16′-10″	70	9′-1″	7′-9″	7′-4½″	2′-5″									
*5SE5	5	247	0′-3¾″	Trans. top	4	4′-7″	19	2′-10¼″	0′-10″	0′-10″	0′-6¾″	0′-7¾″	0′-5½″	0′-8¾″						
*5SE6	5	STR		Trans. top	4	3′-3″	14		3′-3″											
*7SE7	7	73	0′-5 5/16″	Vert. i.f.	8	7′-5½″	122	6′-3¼″	1′-2″	0′-3″	1′-2½″									
*7SE8	7	52	0′-5 5/16″	Vert. o.f.	36	7′-6″	552	6′-4″	1′-2″	0′-3½″	1′-1¾″									
*7SE9	7	52	0′-5 5/16″	Vert. e.f.	8	6′-2″	101	5′-0″	1′-2″	0′-3½″	1′-2″									
*8SE10	8	52	0′-6⅛″	Trans. bot.	60	12′-1½″	1942	10′-9″	1′-4½″	0′-4″	1′-4¼″									
*6SE11	6	65	0′-4½″	Rail	13	6′-1½″	120	1′-0″	1′-4″	1′-4¼″	1′-5¼″	1′-0″	1′-5″							77°
*6SE12	6	65	0′-4½″	Rail	13	6′-10″	133	1′-0″	1′-8½″	1′-6″	1′-7¼″	1′-0″	1′-7¼″							84°
*5SE13	5	17	0′-3¾″	Rail	7	1′-8″	12		1′-3″	0′-5″										
*5SE14	5	17	0′-3¾″	Rail	9	5′-1½″	48		1′-10½″	1′-4¼″	1′-10½″									
*5SE15	5	17	0′-3¾″	Rail	9	6′-2″	58		1′-10¼″	2′-5½″	1′-10¼″									
*4SE16	4	17	0′-3⅛″	Trans. top	8	7′-5″	40		4′-0″	0′-5″	3′-0″									
*5SE17	5	63	0′-3¾″	Long. top	74	10′-5″	804		1′-10½″	4′-2½″	1′-3½″	0′-7″	3′-4½″							
*5SE18	5	17	0′-3¾″	Long. top	74	7′-2″	553		3′-4″	1′-5¾″	2′-4″									
*5SE19	5	T9	0′-2 9/16″	Vert.	16	2′-9½″	47	0′-5½″	1′-10″					0′-6″						
*6SE20	6	T2	0′-4½″	Long. top	8	14′-0″	168	1′-0″	4′-2″	1′-10″	4′-2″	1′-10″		1′-0″						
*9SE21	9	103	0′-9 7/16″	Trans. top	6	22′-7½″	462	20′-1¼″												
*6SE22	6	52	0′-4½″	Trans. top	10	11′-4″	170	9′-3¾″	2′-0″	1′-11¾″	0′-4¾″									
*6SE23	6	STR		Trans. top	5	19′-10″	149		19′-10″											
*7SE24	7	STR		Trans. top	14	36′-2″	1035		36′-2″											
*5SE25	5	STR		Trans. top	6	10′-8½″	67		10′-8½″											
*5SE26	5	STR		Trans. top	3	19′-1″	60		19′-1″											
*11SE27	11	103	1′-0″	Vert.	8	13′-8½″	583	10′-6½″												
*6SE28	6	STR		Horiz. i.f.	18	6′-6″	176		6′-6″											
*5SE29	5	89	0′-3¾″	Horiz. o.f.	14	14′-3″	208		0′-10½″	8′-6″	0′-10½″	2′-0″	2′-0″							
*8SE30	8	17	0′-6⅛″	Horiz.	16	15′-0½″	643		6′-6¼″	2′-0″	6′-6¼″									
*6SE31	6	17	0′-4½″	Horiz.	112	12′-2″	2047		5′-1″	2′-0″	5′-1″									
*5SE32	5	STR		Long. bot.	32	8′-0″	267		8′-0″											
*9SE33	9	52	0′-9 7/16″	Vert. o.f.	36	11′-0″	1346	6′-2″	4′-10″	1′-2″	4′-8½″									
*8SE34	8	2	0′-6⅛″	Trans. bot.	8	5′-6½″	118	1′-4″	4′-2½″											
*6SE35	6	STR		Trans. bot.	4	6′-6½″	39		6′-6½″											
*6SE36	6	2	0′-4½″	Vert.	98	9′-7½″	1417	1′-0″	7′-7½″					1′-0″						
*6SE37	6	2	0′-4½″	Vert.	14	8′-3½″	174	1′-0″	6′-3½″					1′-0″						
*6SE38	6	55	0′-4½″	Vert.	14	4′-6″	95		1′-0″	0′-3¾″	3′-1¼″	0′-10¾″								
				SUBTOTAL			14461 LBS													

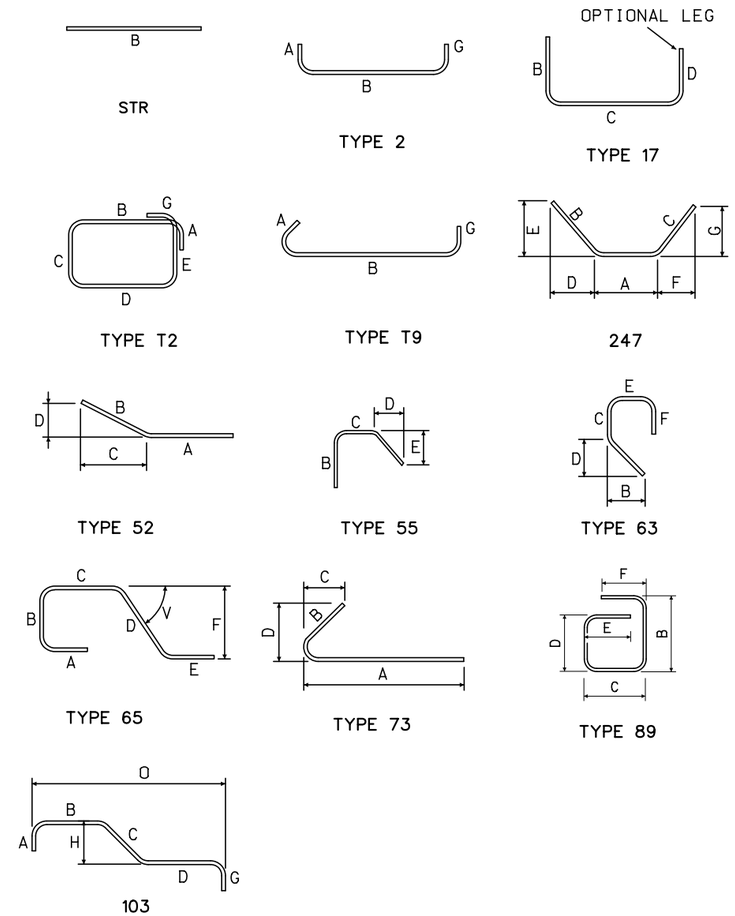

U.S. DEPARTMENT OF TRANSPORTATION
FEDERAL HIGHWAY ADMINISTRATION
EASTERN FEDERAL LANDS HIGHWAY DIVISION

BLUE RIDGE PARKWAY

BRIDGE OVER I-26

SEGMENT A1 BAR LIST

NO.	DATE	BY	REVISIONS	NO.	DATE	BY	REVISIONS	DESIGNED BY	DRAWN BY	CHECKED BY	SCALE	PROJECT TEAM LEADER	BRIDGE PLAN SHEET	DATE	BRP NO.
								CC	CC	LE	No Scale	George Choubah	59 of 228	December 2018	BRP-1265

ACTUAL FILE:R59_BLRI_I26_SEGMENT A1 BAR LIST.DGN
M:\PROJECTS_STATE_DOT\NC\blri_I26_nepa\Bridge\Microstation\Bridge Design Files\0_PROJECTS.dgn
14-Dec-2018 12:18 PM

STATE	PROJECT	SHEET NUMBER
NC	BLRI OVER I-26	R60

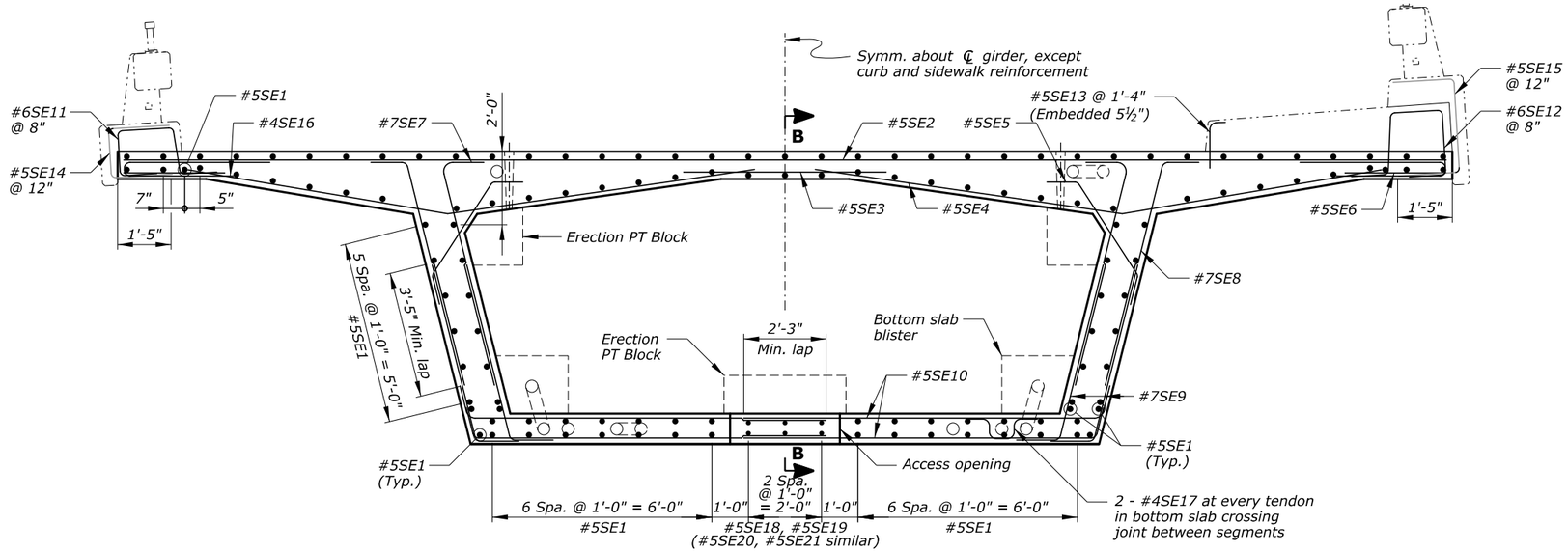

SECTION A-A
Looking downstation
Scale: ½" = 1'-0"

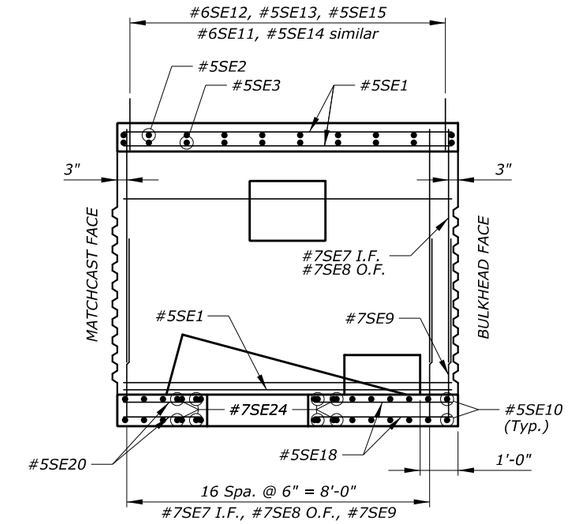

SECTION B-B

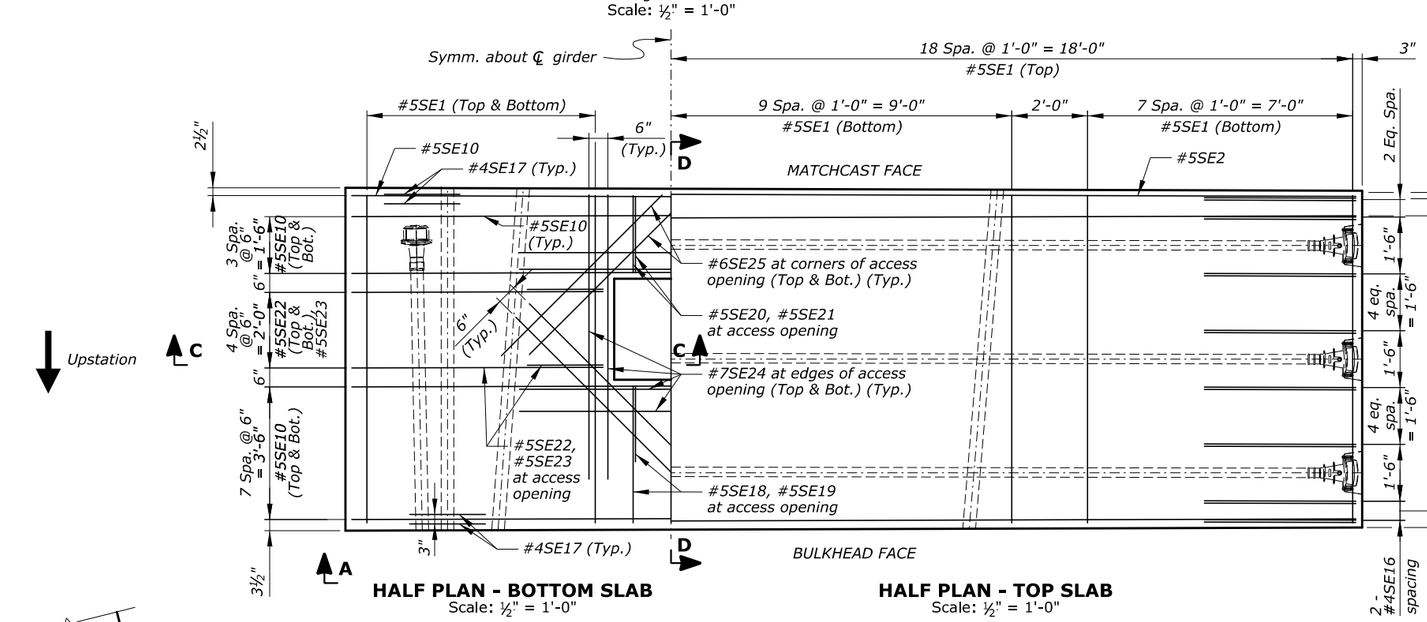

HALF PLAN - BOTTOM SLAB
Scale: ½" = 1'-0"

HALF PLAN - TOP SLAB
Scale: ½" = 1'-0"

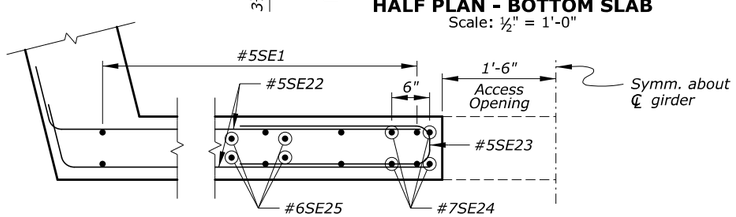

SECTION C-C
Scale: 1" = 1'-0"

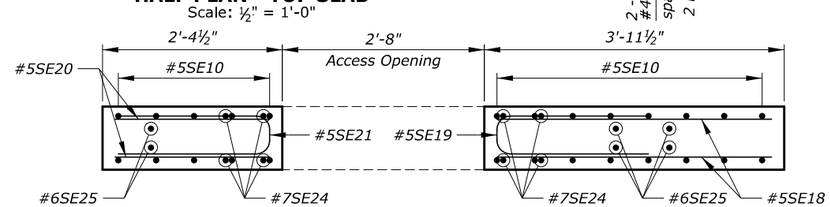

SECTION D-D
Scale: 1" = 1'-0"

Notes:

1. Minimum concrete cover is 2½" at top face of deck, and 1½" at all other faces, unless otherwise noted.
2. Adjust slightly the location of reinforcement to avoid conflict with post-tensioning ducts.
3. For information on reinforcement in erection post-tensioning anchor blocks, see "ERECTION ANCHOR BLOCK" sheet.
4. For information on reinforcement in the bottom slab blister, see "BOTTOM SLAB BLISTER" sheet.
5. For information on reinforcement in the access opening, see "BOTTOM SLAB ACCESS OPENING" sheet.

Key:

e.f. = each face
I.F. = inside face
O.F. = outside face

U.S. DEPARTMENT OF TRANSPORTATION
FEDERAL HIGHWAY ADMINISTRATION
EASTERN FEDERAL LANDS HIGHWAY DIVISION

BLUE RIDGE PARKWAY

BRIDGE OVER I-26

SEGMENT A1-1U REINFORCEMENT

NO.	DATE	BY	REVISIONS	NO.	DATE	BY	REVISIONS	DESIGNED BY	DRAWN BY	CHECKED BY	SCALE	PROJECT TEAM LEADER	BRIDGE PLAN SHEET	DATE	BRP NO.
								CC/CWN	BK/CC	HC	As Shown	George Choubah	60 of 228	December 2018	BRP-1265

STATE	PROJECT	SHEET NUMBER
NC	BLRI OVER I-26	R61

REINFORCING STEEL SCHEDULE — DIMENSION TABLE

SEGMENT A1-1U BAR LIST

BAR MK	SIZE	TYPE	PIN SZ	LOCATION	QTY	LENGTH	WEIGHT	A	B	C	D	E	F	G	H	J	K	O	R	V or N
*5SE1	5	STR		Longitudinal	132	8'-8"	1193		8'-8"											
*5SE2	5	STR		Trans. top	10	36'-2"	377		36'-2"											
*5SE3	5	STR		Trans. top	10	6'-0"	63		6'-0"											
*5SE4	5	52	0'-3¾"	Trans. top	20	16'-10"	351	9'-1"	7'-9"	7'-4½"	2'-5"									
*5SE5	5	247	0'-3¾"	Trans. top	20	4'-7"	96	2'-10¼"	0'-10"	0'-10"	0'-6¾"	0'-7¾"	0'-5½"	0'-8¾"						
*5SE6	5	STR		Trans. top	20	3'-3"	68		3'-3"											
*7SE7	7	73	0'-5 5/16"	Vert. i.f.	36	7'-5½"	549	6'-3¼"	1'-2"	0'-3"	1'-2½"									
*7SE8	7	52	0'-5 5/16"	Vert. o.f.	36	7'-6"	552	6'-4"	1'-2"	0'-3½"	1'-1¾"									
*7SE9	7	52	0'-5 5/16"	Vert. e.f.	72	6'-2½"	914	5'-0½"	1'-2"	0'-3½"	1'-1¾"									
*5SE10	5	52	0'-3¾"	Trans. bot.	48	10'-4"	517	9'-6"	0'-10"	0'-2½"	0'-10"									
*6SE11	6	65	0'-4½"	Rail	14	6'-11½"	129	1'-0"	1'-4"	1'-4¼"	1'-5¼"	1'-0"	1'-5"							77°
*6SE12	6	65	0'-4½"	Rail	14	6'-10"	144	1'-0"	1'-8½"	1'-6"	1'-7¼"	1'-0"	1'-7¼"							84°
*5SE13	5	17	0'-3¾"	Rail	7	1'-8"	12		1'-3"	0'-5"										
*5SE14	5	17	0'-3¾"	Rail	9	5'-11½"	48		1'-10½"	1'-4¼"	1'-10½"									
*5SE15	5	17	0'-3¾"	Rail	9	6'-2"	58		1'-10¼"	2'-5½"	1'-10¼"									
*4SE16	4	17	0'-3⅛"	Trans. top	64	8'-5"	360		4'-0"	0'-5"	4'-0"									
*4SE17	4	S4	0'-3⅛"	Trans. bot.	20	3'-2½"	43	0'-8"	0'-7"	0'-8½"	0'-7"	0'-8"								
*5SE18	5	STR		Long. bot.	6	3'-7½"	23		3'-7½"											
*5SE19	5	17	0'-3¾"	Long. bot.	3	5'-5½"	17		2'-6"	0'-5¼"	2'-6"									
*5SE20	5	STR		Long. bot.	6	2'-0½"	13		2'-0½"											
*5SE21	5	17	0'-3¾"	Long. bot.	3	4'-5½"	14		2'-0"	0'-5¼"	2'-0"									
*5SE22	5	52	0'-3¾"	Trans. bot.	20	7'-8"	160	6'-9¾"	0'-10"	0'-2½"	0'-10"									
*5SE23	5	17	0'-3¾"	Trans. bot.	10	5'-7"	58		2'-6"	0'-7"	2'-6"									
*7SE24	7	STR		Long. bot.	16	7'-0"	229		7'-0"											
*6SE25	6	STR		Horiz. bot.	16	6'-0"	144		6'-0"											
				SUBTOTAL			6130 LBS													

ERECTION ANCHOR BLOCK BAR LIST

BAR MK	SIZE	TYPE	PIN SZ	LOCATION	QTY	LENGTH	WEIGHT	A	B	C	D	E	F	G	H	J	K	O	R	V or N
*6DE1	6	S4	0'-4½"	Trans. bot.	6	8'-2½"	74	1'-0"	1'-6¾"	3'-1"	1'-6¾"	1'-0"								
*6DE2	6	S4	0'-4½"	Long. bot.	6	6'-11"	62	1'-0"	1'-7"	1'-9"	1'-7"	1'-0"								
*6DE3	6	239	0'-4½"	Trans. top	12	7'-3"	131	1'-0"	2'-5¼"	1'-6¾"	1'-2¾"	1'-0"	76°	90°	14°					
*6DE4	6	S4	0'-4½"	Stirrups	2	8'-3½"	25	1'-0"	2'-4"	1'-7½"	2'-4"	1'-0"								
*6DE5	6	S4	0'-4½"	Stirrups	2	8'-6½"	26	1'-0"	2'-5½"	1'-7½"	2'-5½"	1'-0"								
*6DE6	6	S4	0'-4½"	Stirrups	2	8'-10"	27	1'-0"	2'-7¼"	1'-7½"	2'-7¼"	1'-0"								
*6DE7	6	S4	0'-4½"	Long. top	4	8'-11"	54	1'-0"	2'-7¾"	1'-7½"	2'-7¾"	1'-0"								
				SUBTOTAL			398 LBS													

BOTTOM SLAB BLISTER BAR LIST

BAR MK	SIZE	TYPE	PIN SZ	LOCATION	QTY	LENGTH	WEIGHT	A	B	C	D	E	F	G	H	J	K	O	R	V or N
*6LE1	6	17	0'-4½"	Long. bot.	6	9'-2½"	83		8'-8"	0'-6½"										
*5LE2	5	249	0'-3¾"	Long. bot.	8	10'-11"	91	0'-10"	2'-0"	7'-3¼"	0'-10"	77°	90°	13°						
*5LE3	5	STR		Long. bot.	8	6'-5½"	54		6'-5½"											
*5LE4	5	STR		Long. bot.	8	4'-3½"	36		4'-3½"											
*6LE5	6	755	0'-4½"		2 sets of 15	6'-7" to 5'-6½" at 0'-1" Incr.	254	1'-0"	2'-6¼" to 2'-10¼" at 0'-0" Incr.	2'-0¾" to 0'-8¼" at 0'-1" Incr.	1'-0"	0'-11¾"								
*6LE6	6	1031	0'-4½"	Trans. bot.	6	8'-11½"	81	0'-3"	2'-11"	1'-4¾"	2'-7"	0'-3"	1'-0"	1'-0"	1'-0"	1'-0"				
*6LE7	6	101	0'-4½"	Trans. bot.	2 sets of 12	6'-4" to 4'-8½" at 0'-2" Incr.	176	1'-0"	1'-6¼" to 0'-8¼" at 0'-1" Incr.	1'-3¾"	1'-6¼" to 0'-8¼" at 0'-1" Incr.	1'-0"								
				SUBTOTAL			818 LBS													

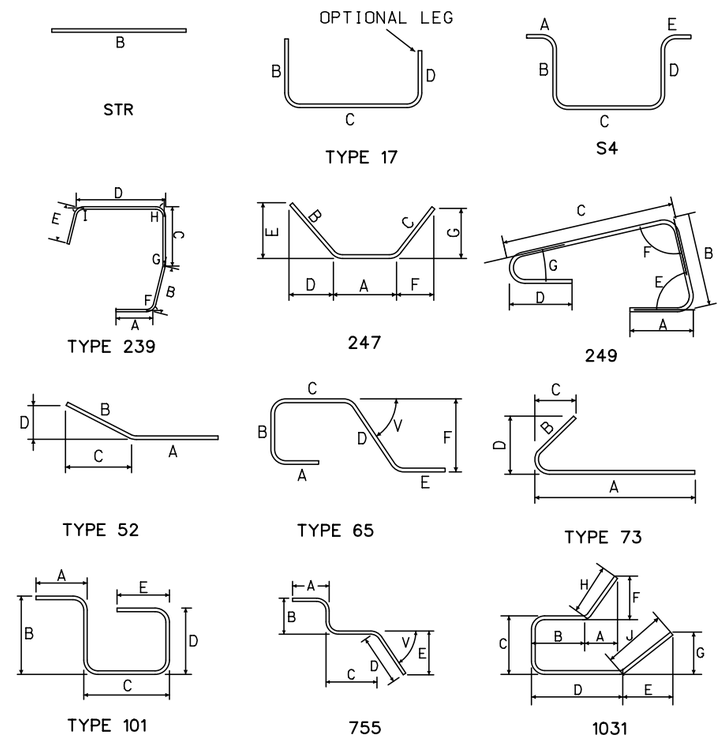

U.S. DEPARTMENT OF TRANSPORTATION
FEDERAL HIGHWAY ADMINISTRATION
EASTERN FEDERAL LANDS HIGHWAY DIVISION

BLUE RIDGE PARKWAY

BRIDGE OVER I-26

SEGMENT A1-1U BAR LIST

NO.	DATE	BY	REVISIONS	NO.	DATE	BY	REVISIONS	DESIGNED BY	DRAWN BY	CHECKED BY	SCALE	PROJECT TEAM LEADER	BRIDGE PLAN SHEET	DATE	BRP NO.
								CC	CC	LE	No Scale	George Choubah	61 of 228	December 2018	BRP-1265

ACTUAL FILE:R61_BLRI_I26_SEGMENT A1-1U BAR LIST.DGN
M:\PROJECTS_STATE_DOT\NC\blri_I26_nepa\BridgeWlcrostation\Bridge Design Files\0_OPROJECTS.dgn
14-Dec-2018 12:18 PM

STATE	PROJECT	SHEET NUMBER
NC	BLRI OVER I-26	R62

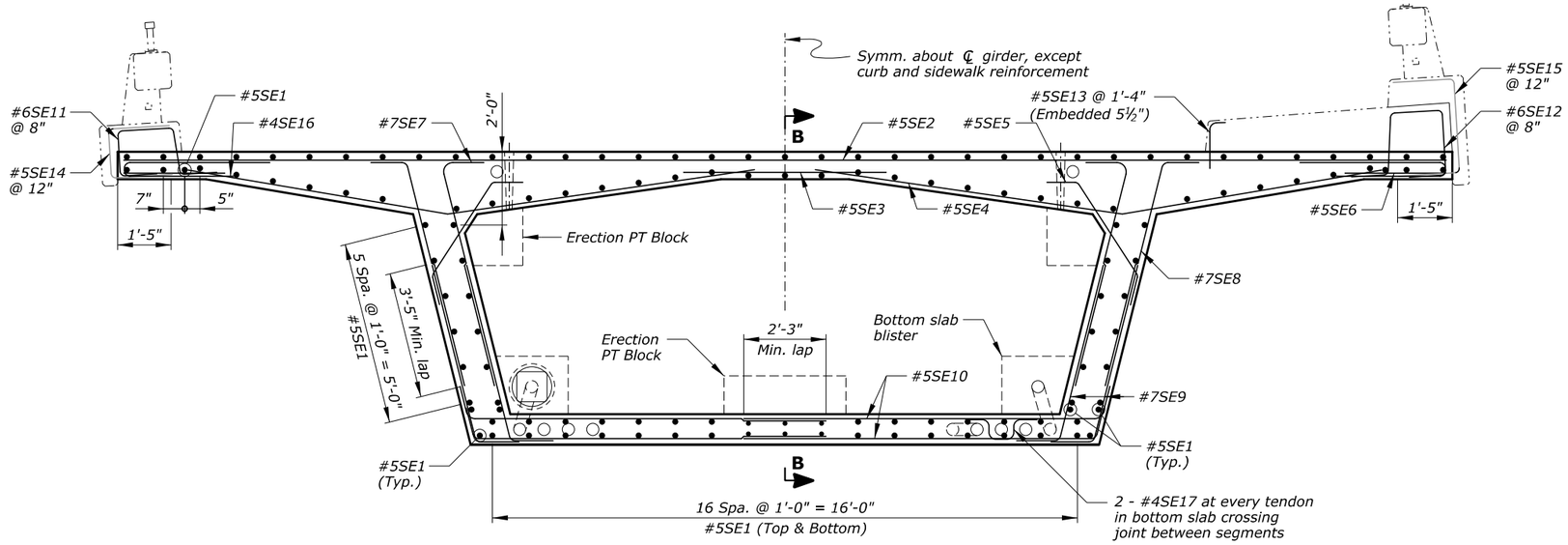

SECTION A-A
Looking downstation

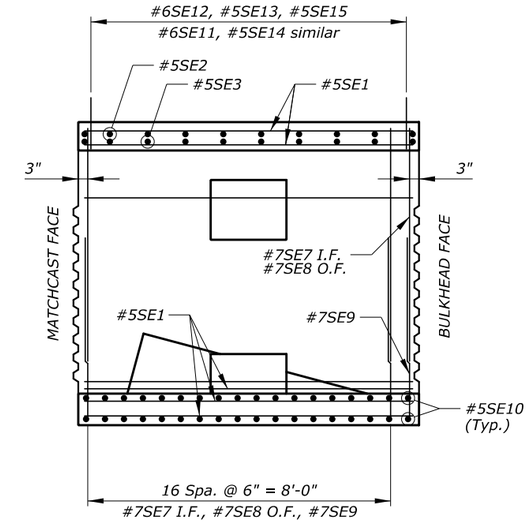

SECTION B-B

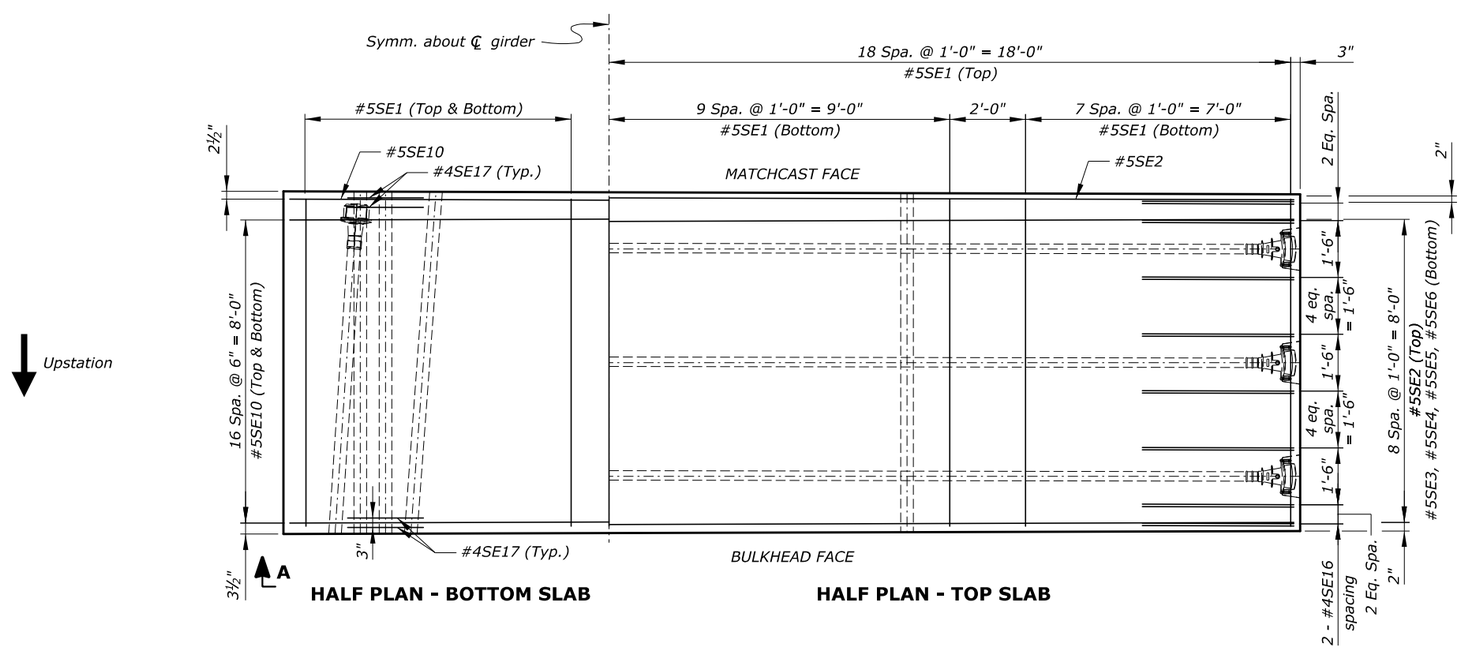

HALF PLAN - BOTTOM SLAB **HALF PLAN - TOP SLAB**

Notes:

1. *Minimum concrete cover is 2½" at top face of deck, and 1½" at all other faces, unless otherwise noted.*
2. *Adjust slightly the location of reinforcement to avoid conflict with post-tensioning ducts.*
3. *For information on reinforcement in erection post-tensioning anchor blocks, see "ERECTION ANCHOR BLOCK" sheet.*
4. *For information on reinforcement in the bottom slab blister, see "BOTTOM SLAB BLISTER" sheet.*

Key:

e.f. = each face
I.F. = inside face
O.F. = outside face

U.S. DEPARTMENT OF TRANSPORTATION
FEDERAL HIGHWAY ADMINISTRATION
EASTERN FEDERAL LANDS HIGHWAY DIVISION

BLUE RIDGE PARKWAY

BRIDGE OVER I-26

SEGMENT A1-2U REINFORCEMENT

NO.	DATE	BY	REVISIONS	NO.	DATE	BY	REVISIONS	DESIGNED BY	DRAWN BY	CHECKED BY	SCALE	PROJECT TEAM LEADER	BRIDGE PLAN SHEET	DATE	BRP NO.
								CC/CWN	BK/CC	HC	½" = 1'-0"	George Choubah	62 of 228	December 2018	BRP-1265

ACTUAL FILE:R62_BLRI_I26_SEGMENT A1-2U REINF.DGN
M:\PROJECTS_STATE_DOT\NC\blri_I26_repo\Bridge\Microstation\Bridge Design Files\0_OPROJECTS.dgn
14-Dec-2018 12:18 PM

STATE	PROJECT	SHEET NUMBER
NC	BLRI OVER I-26	R63

REINFORCING STEEL SCHEDULE — DIMENSION TABLE

SEGMENT A1-2U BAR LIST

BAR MK	SIZE	TYPE	PIN SZ	LOCATION	QTY	LENGTH	WEIGHT	A	B	C	D	E	F	G	H	J	K	O	R	V or N
*5SE1	5	STR		Longitudinal	138	8′-8″	1247		8′-8″											
*5SE2	5	STR		Trans. top	10	36′-2″	377		36′-2″											
*5SE3	5	STR		Trans. top	10	6′-0″	63		6′-0″											
*5SE4	5	52	0′-3¾″	Trans. top	20	16′-10″	351	9′-1″	7′-9″	7′-4½″	2′-5″									
*5SE5	5	247	0′-3¾″	Trans. top	20	4′-7″	96	2′-10¼″	0′-10″	0′-10″	0′-6¾″	0′-7¾″	0′-5½″	0′-8¾″						
*5SE6	5	STR		Trans. top	20	3′-3″	68		3′-3″											
*7SE7	7	73	0′-5 5/16″	Vert. i.f.	36	7′-5½″	549	6′-3¼″	1′-2″	0′-3″	1′-2½″									
*7SE8	7	52	0′-5 5/16″	Vert. o.f.	36	7′-6″	552	6′-4″	1′-2″	0′-3½″	1′-1¾″									
*7SE9	7	52	0′-5 5/16″	Vert. e.f.	72	6′-2½″	914	5′-0½″	1′-2″	0′-3½″	1′-1¾″									
*5SE10	5	52	0′-3¾″	Trans. bot.	72	10′-4″	776	9′-6″	0′-10″	0′-2½″	0′-10″									
*6SE11	6	65	0′-4½″	Rail	14	6′-11½″	129	1′-0″	1′-4″	1′-4¼″	1′-5¼″	1′-0″	1′-5″							77°
*6SE12	6	65	0′-4½″	Rail	14	6′-10″	144	1′-0″	1′-8½″	1′-6″	1′-7¼″	1′-0″	1′-7¼″							84°
*5SE13	5	17	0′-3¾″	Rail	7	1′-8″	12		1′-3″	0′-5″										
*5SE14	5	17	0′-3¾″	Rail	9	5′-11½″	48		1′-10½″	1′-4¼″	1′-10½″									
*5SE15	5	17	0′-3¾″	Rail	9	6′-2″	58		1′-10¼″	2′-5½″	1′-10¼″									
*4SE16	4	17	0′-3⅛″	Trans. top	64	8′-5″	360		4′-0″	0′-5″	4′-0″									
*4SE17	4	S4	0′-3⅛″	Trans. bot.	28	3′-2½″	60	0′-8″	0′-7″	0′-8½″	0′-7″	0′-8″								
				SUBTOTAL			5803 LBS													

ERECTION ANCHOR BLOCK BAR LIST

BAR MK	SIZE	TYPE	PIN SZ	LOCATION	QTY	LENGTH	WEIGHT	A	B	C	D	E	F	G	H	J	K	O	R	V or N
*6DE1	6	S4	0′-4½″	Trans. bot.	6	8′-2½″	74	1′-0″	1′-6¾″	3′-1″	1′-6¾″	1′-0″								
*6DE2	6	S4	0′-4½″	Long. bot.	6	6′-11″	62	1′-0″	1′-7″	1′-9″	1′-7″	1′-0″								
*6DE3	6	239	0′-4½″	Trans. top	12	7′-3″	131	1′-0″	2′-5¼″	1′-6¾″	1′-2¾″	1′-0″	76°	90°	14°					
*6DE4	6	S4	0′-4½″	Stirrups	2	8′-3½″	25	1′-0″	2′-4″	1′-7½″	2′-4″	1′-0″								
*6DE5	6	S4	0′-4½″	Stirrups	2	8′-6½″	26	1′-0″	2′-5½″	1′-7½″	2′-5½″	1′-0″								
*6DE6	6	S4	0′-4½″	Stirrups	2	8′-10″	27	1′-0″	2′-7¼″	1′-7½″	2′-7¼″	1′-0″								
*6DE7	6	S4	0′-4½″	Long. top	4	8′-11″	54	1′-0″	2′-7¾″	1′-7½″	2′-7¾″	1′-0″								
				SUBTOTAL			398 LBS													

BOTTOM SLAB BLISTER BAR LIST

BAR MK	SIZE	TYPE	PIN SZ	LOCATION	QTY	LENGTH	WEIGHT	A	B	C	D	E	F	G	H	J	K	O	R	V or N
*6LE1	6	17	0′-4½″	Long. bot.	6	9′-2½″	83		8′-8″	0′-6½″										
*5LE2	5	249	0′-3¾″	Long. bot.	8	10′-11″	91	0′-10″	2′-0″	7′-3¼″	0′-10″	77°	90°	13°						
*5LE3	5	STR		Long. bot.	8	6′-5½″	54		6′-5½″											
*5LE4	5	STR		Long. bot.	8	4′-3½″	36		4′-3½″											
*6LE5	6	755	0′-4½″		2 sets of 15	6′-7″ to 5′-6½″ at 0′-1″ Incr.	254	1′-0″	2′-6¼″ to 2′-10¼″ at 0′-0″ Incr.	2′-0¾″ to 0′-8¼″ at 0′-1″ Incr.	1′-0″	0′-11¾″								76°
*6LE6	6	1031	0′-4½″	Trans. bot.	6	8′-11½″	81	0′-3″	2′-11″	1′-4¾″	2′-7″	0′-3″	1′-0″	1′-0″	1′-0″	1′-0″				
*6LE7	6	101	0′-4½″	Trans. bot.	2 sets of 12	6′-4″ to 4′-8½″ at 0′-2″ Incr.	176	1′-0″	1′-6¼″ to 0′-8¼″ at 0′-1″ Incr.	1′-3¾″	1′-6¼″ to 0′-8¼″ at 0′-1″ Incr.	1′-0″								
				SUBTOTAL			818 LBS													

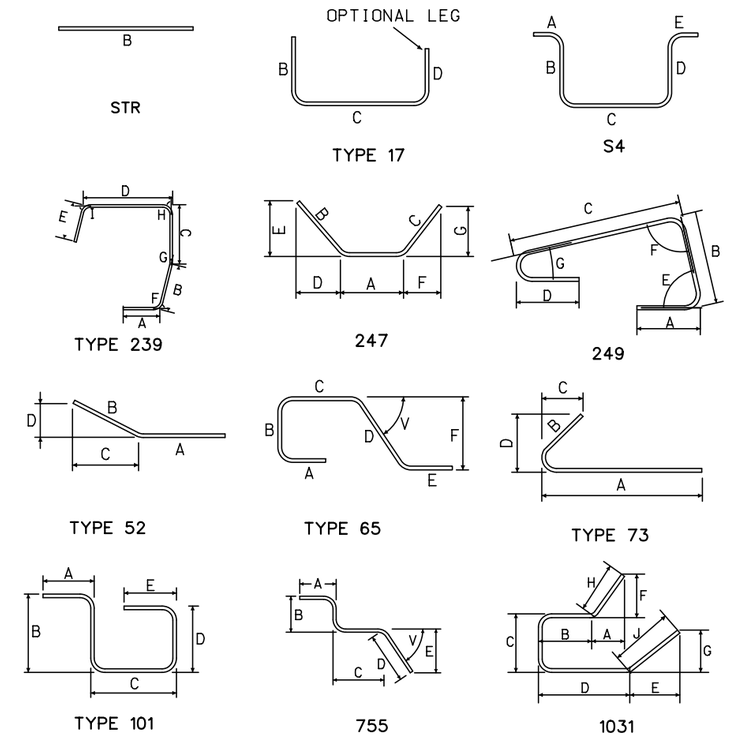

U.S. DEPARTMENT OF TRANSPORTATION
FEDERAL HIGHWAY ADMINISTRATION
EASTERN FEDERAL LANDS HIGHWAY DIVISION

BLUE RIDGE PARKWAY

BRIDGE OVER I-26

SEGMENT A1-2U BAR LIST

NO.	DATE	BY	REVISIONS	NO.	DATE	BY	REVISIONS	DESIGNED BY	DRAWN BY	CHECKED BY	SCALE	PROJECT TEAM LEADER	BRIDGE PLAN SHEET	DATE	BRP NO.
								CC	CC	LE	No Scale	George Choubah	63 of 228	December 2018	BRP-1265

ACTUAL FILE:R63_BLRI_I26_SEGMENT A1-2U BAR LIST.DGN
M:\PROJECTS_STATE_DOT\NC\blri_I26_repo\Bridge\Microstation\Bridge Design Files\0_OPROJECTS.dgn
14-Dec-2018 12:18 PM

STATE	PROJECT	SHEET NUMBER
NC	BLRI OVER I-26	R64

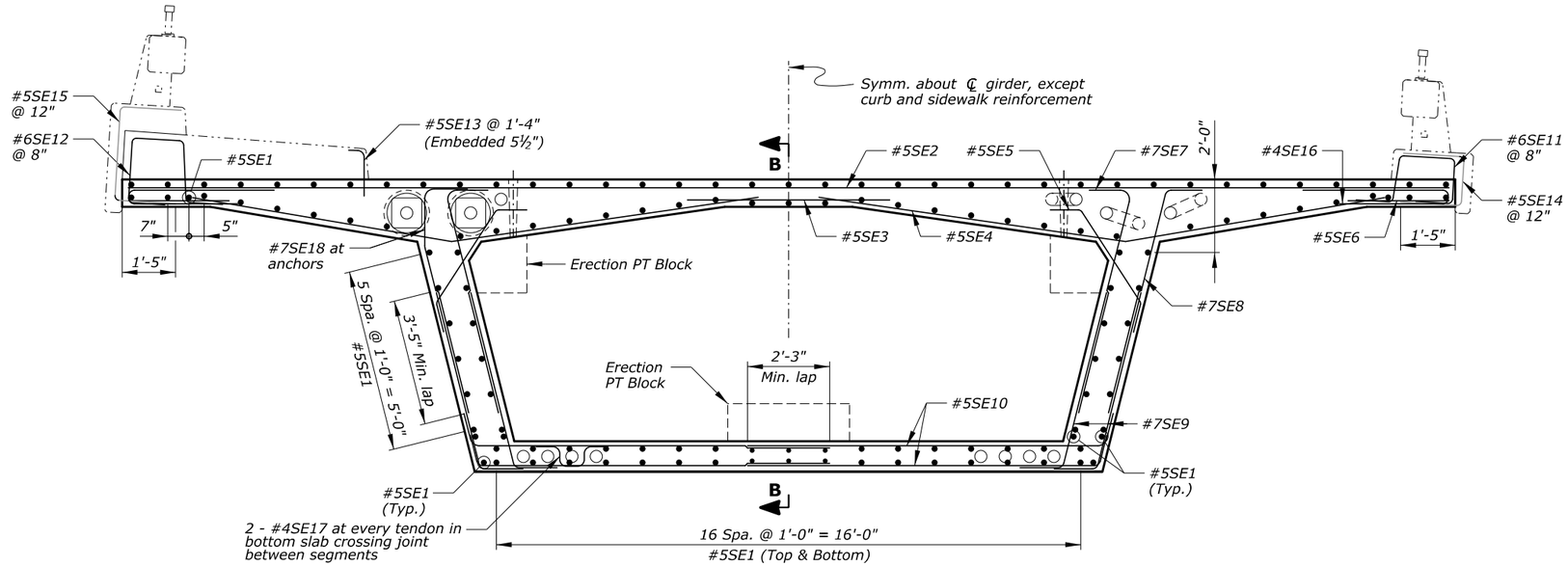

SECTION A-A
Looking upstation

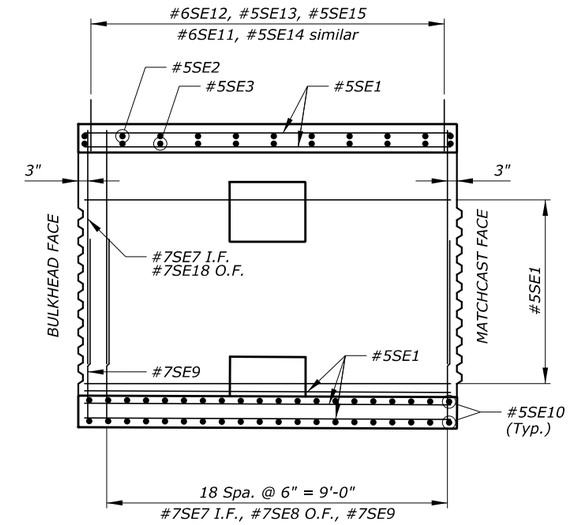

SECTION B-B

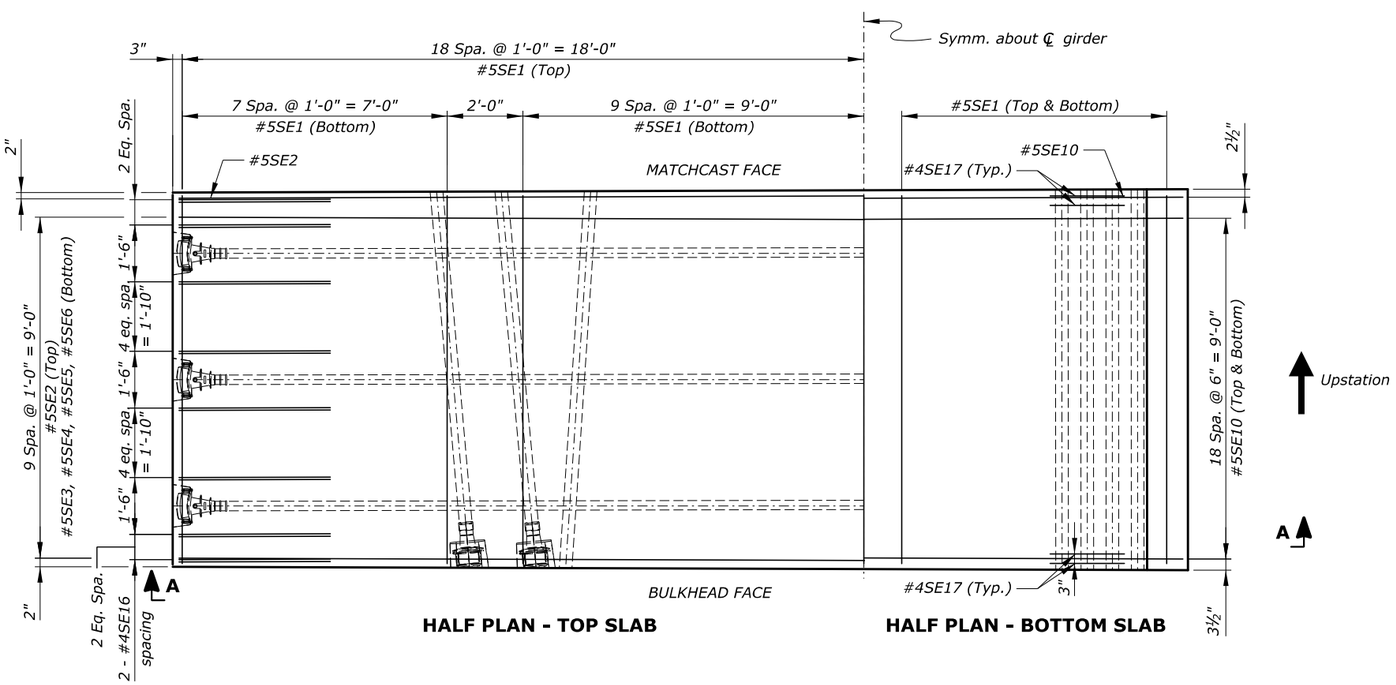

HALF PLAN - TOP SLAB

HALF PLAN - BOTTOM SLAB

Notes:

1. *Minimum concrete cover is 2½" at top face of deck, and 1½" at all other faces, unless otherwise noted.*
2. *Adjust slightly the location of reinforcement to avoid conflict with post-tensioning ducts.*
3. *For information on reinforcement in erection post-tensioning anchor blocks, see "ERECTION ANCHOR BLOCK" sheet.*

Key:

e.f. = each face
I.F. = inside face
O.F. = outside face

U.S. DEPARTMENT OF TRANSPORTATION
FEDERAL HIGHWAY ADMINISTRATION
EASTERN FEDERAL LANDS HIGHWAY DIVISION

BLUE RIDGE PARKWAY

BRIDGE OVER I-26

SEGMENT 1-13D REINFORCEMENT

NO.	DATE	BY	REVISIONS	NO.	DATE	BY	REVISIONS	DESIGNED BY	DRAWN BY	CHECKED BY	SCALE	PROJECT TEAM LEADER	BRIDGE PLAN SHEET	DATE	BRP NO.
								CC/CWN	BK/CC	HC	½" = 1'-0"	George Choubah	64 of 228	December 2018	BRP-1265

ACTUAL FILE:R64_BLRI_I26_SEGMENT 1-13D REINF.DGN
M:\PROJECTS_STATE_DOT\NC\blri_I26_nepa\Bridge\Microstation\Bridge Design Files\0_OPROJECTS.dgn
14-Dec-2018 12:18 PM

STATE	PROJECT	SHEET NUMBER
NC	BLRI OVER I-26	R65

REINFORCING STEEL SCHEDULE — DIMENSION TABLE

SEGMENT 1-13D BAR LIST

BAR MK	SIZE	TYPE	PIN SZ	LOCATION	QTY	LENGTH	WEIGHT	A	B	C	D	E	F	G	H	J	K	O	R	V or N
*5SE1	5	STR		Longitudinal	138	9′-8″	1391		9′-8″											
*5SE2	5	STR		Trans. top	11	36′-2″	415		36′-2″											
*5SE3	5	STR		Trans. top	11	6′-0″	69		6′-0″											
*5SE4	5	52	0′-3¾″	Trans. top	22	16′-10″	386	9′-1″	7′-9″	7′-4½″	2′-5″									
*5SE5	5	247	0′-3¾″	Trans. top	22	4′-7″	105	2′-10¼″	0′-10″	0′-10″	0′-6¾″	0′-7¾″	0′-5½″	0′-8¾″						
*5SE6	5	STR		Trans. top	22	3′-3″	75		3′-3″											
*7SE7	7	73	0′-5 5/16″	Vert. i.f.	40	7′-5½″	610	6′-3¼″	1′-2″	0′-3″	1′-2½″									
*7SE8	7	52	0′-5 5/16″	Vert. o.f.	38	7′-6″	583	6′-4″	1′-2″	0′-3½″	1′-1¾″									
*7SE9	7	52	0′-5 5/16″	Vert. e.f.	80	6′-2½″	1015	5′-0½″	1′-2″	0′-3½″	1′-1¾″									
*5SE10	5	52	0′-3¾″	Trans. bot.	80	10′-4″	862	9′-6″	0′-10″	0′-2½″	0′-10″									
*6SE11	6	65	0′-4½″	Rail	15	6′-1½″	138	1′-0″	1′-4″	1′-4¼″	1′-5¼″	1′-0″	1′-5″							77°
*6SE12	6	65	0′-4½″	Rail	15	6′-10″	154	1′-0″	1′-8½″	1′-6″	1′-7¼″	1′-0″	1′-7¼″							84°
*5SE13	5	17	0′-3¾″	Rail	8	1′-8″	14		1′-3″	0′-5″										
*5SE14	5	17	0′-3¾″	Rail	10	5′-1½″	53		1′-10½″	1′-4¼″	1′-10½″									
*5SE15	5	17	0′-3¾″	Rail	10	6′-2″	64		1′-10¼″	2′-5½″	1′-10¼″									
*4SE16	4	17	0′-3⅛″	Trans. top	64	7′-5″	317		4′-0″	0′-5″	3′-0″									
*4SE17	4	S4	0′-3⅛″	Trans. bot.	32	3′-2½″	69	0′-8″	0′-7″	0′-8½″	0′-7″	0′-8″								
*7SE18	7	55	0′-5 5/16″	Vert. o.f.	2	7′-5½″	30		1′-2″	2′-0″	4′-2¼″	1′-1¼″								
				SUBTOTAL			6351 LBS													

ERECTION ANCHOR BLOCK BAR LIST

BAR MK	SIZE	TYPE	PIN SZ	LOCATION	QTY	LENGTH	WEIGHT	A	B	C	D	E	F	G	H	J	K	O	R	V or N
*6DE1	6	S4	0′-4½″	Trans. bot.	6	8′-2½″	74	1′-0″	1′-6¾″	3′-1″	1′-6¾″	1′-0″								
*6DE2	6	S4	0′-4½″	Long. bot.	6	6′-11″	62	1′-0″	1′-7″	1′-9″	1′-7″	1′-0″								
*6DE3	6	239	0′-4½″	Trans. top	12	7′-3″	131	1′-0″	2′-5¼″	1′-6¾″	1′-2¾″	1′-0″	76°	90°	14°					
*6DE4	6	S4	0′-4½″	Stirrups	2	8′-3½″	25	1′-0″	2′-4″	1′-7½″	2′-4″	1′-0″								
*6DE5	6	S4	0′-4½″	Stirrups	2	8′-6½″	26	1′-0″	2′-5½″	1′-7½″	2′-5½″	1′-0″								
*6DE6	6	S4	0′-4½″	Stirrups	2	8′-10″	27	1′-0″	2′-7¼″	1′-7½″	2′-7¼″	1′-0″								
*6DE7	6	S4	0′-4½″	Long. top	4	8′-11″	54	1′-0″	2′-7¾″	1′-7½″	2′-7¾″	1′-0″								
				SUBTOTAL			398 LBS													

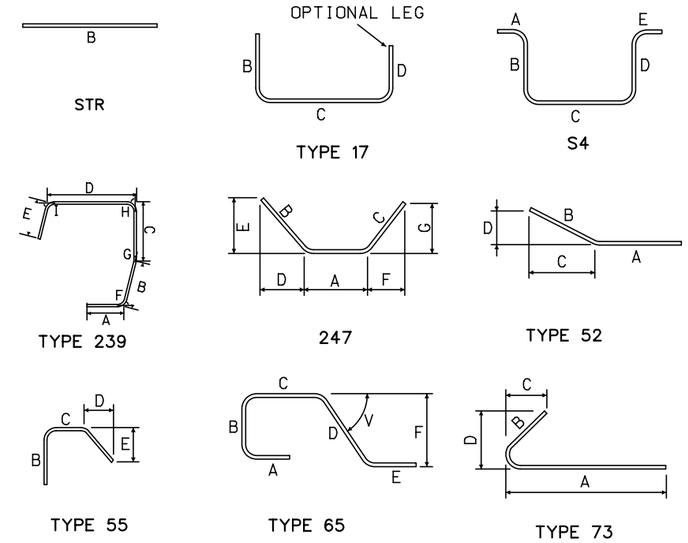

U.S. DEPARTMENT OF TRANSPORTATION
FEDERAL HIGHWAY ADMINISTRATION
EASTERN FEDERAL LANDS HIGHWAY DIVISION

BLUE RIDGE PARKWAY

BRIDGE OVER I-26

SEGMENT 1-13D BAR LIST

NO.	DATE	BY	REVISIONS	NO.	DATE	BY	REVISIONS	DESIGNED BY	DRAWN BY	CHECKED BY	SCALE	PROJECT TEAM LEADER	BRIDGE PLAN SHEET	DATE	BRP NO.
								CC	CC	LE	No Scale	George Choubah	65 of 228	December 2018	BRP-1265

ACTUAL FILE:R65_BLRI_I26_SEGMENT 1-13D BAR LIST.DGN
M:\PROJECTS_STATE_DOT\NC\blri_I26_repo\Bridge\Microstation\Bridge Design Files\0_OPROJECTS.dgn
14-Dec-2018 12:18 PM

STATE	PROJECT	SHEET NUMBER
NC	BLRI OVER I-26	R66

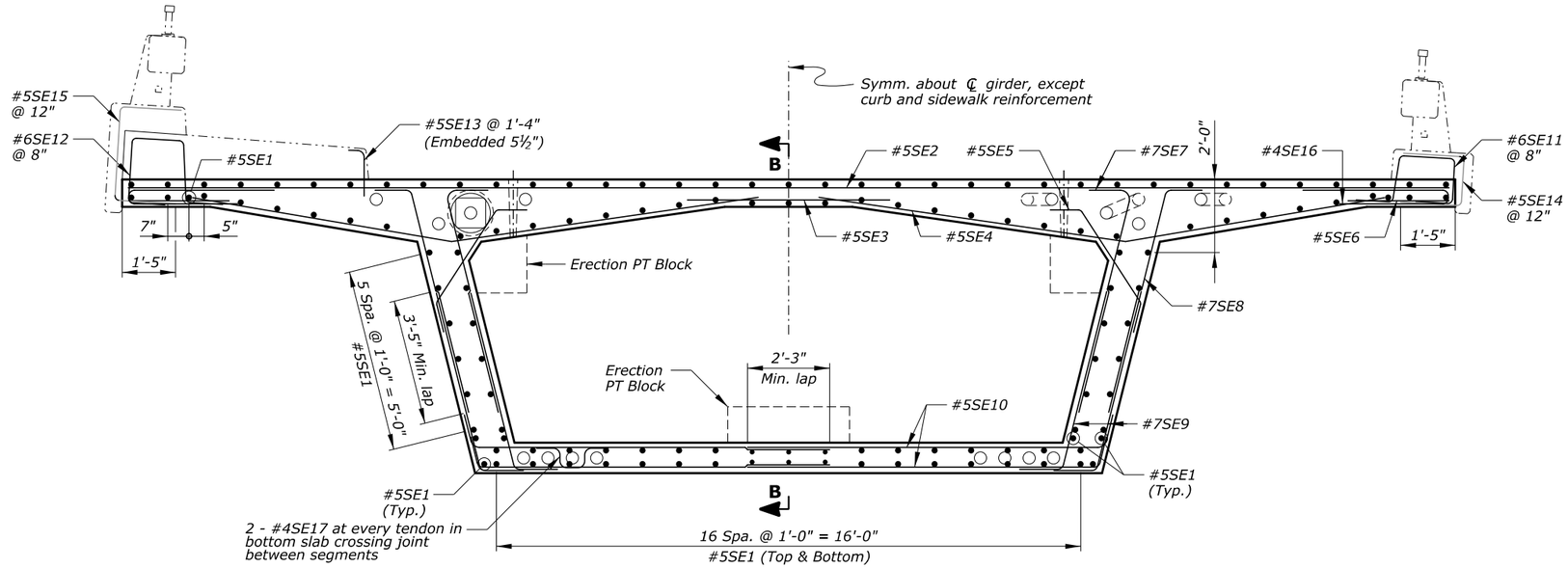

SECTION A-A
Looking upstation

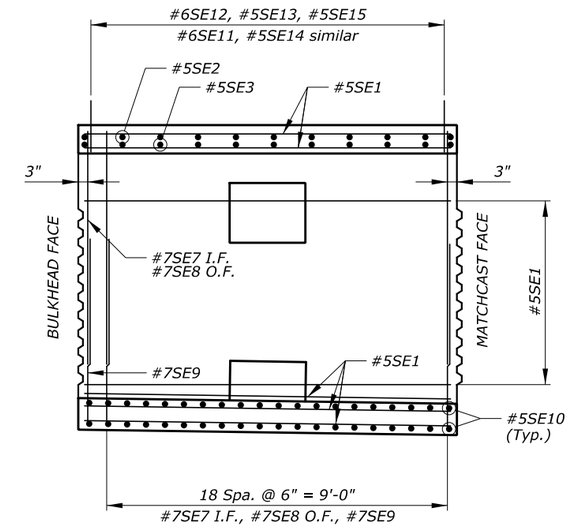

SECTION B-B

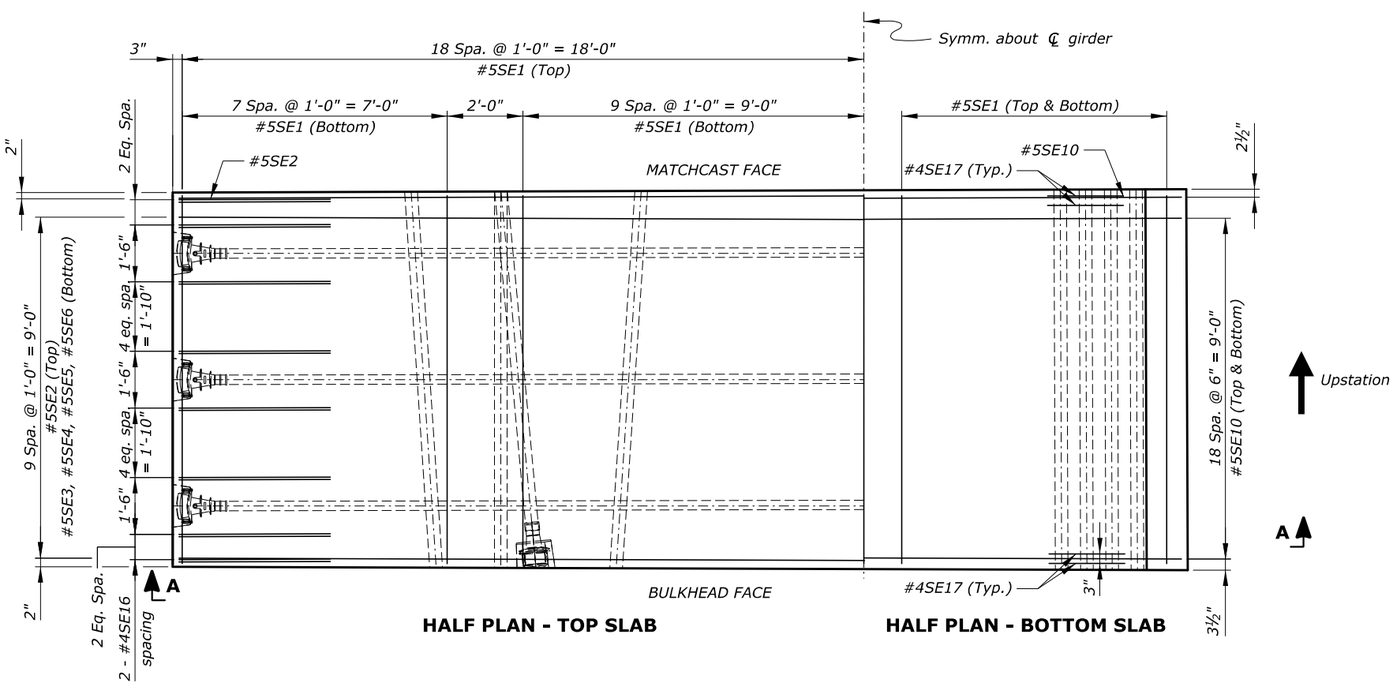

HALF PLAN - TOP SLAB

HALF PLAN - BOTTOM SLAB

Notes:

1. *Minimum concrete cover is 2½" at top face of deck, and 1½" at all other faces, unless otherwise noted.*
2. *Adjust slightly the location of reinforcement to avoid conflict with post-tensioning ducts.*
3. *For information on reinforcement in erection post-tensioning anchor blocks, see "ERECTION ANCHOR BLOCK" sheet.*

Key:

e.f. = each face
I.F. = inside face
O.F. = outside face

U.S. DEPARTMENT OF TRANSPORTATION
FEDERAL HIGHWAY ADMINISTRATION
EASTERN FEDERAL LANDS HIGHWAY DIVISION

BLUE RIDGE PARKWAY

BRIDGE OVER I-26

SEGMENT 1-12D REINFORCEMENT

NO.	DATE	BY	REVISIONS	NO.	DATE	BY	REVISIONS	DESIGNED BY	DRAWN BY	CHECKED BY	SCALE	PROJECT TEAM LEADER	BRIDGE PLAN SHEET	DATE	BRP NO.
								CC/CWN	BK/CC	HC	½" = 1'-0"	George Choubah	66 of 228	December 2018	BRP-1265

ACTUAL FILE:R66_BLRI_I26_SEGMENT 1-12D REINF.DGN
M:\PROJECTS_STATE_DOT\NC\blri_I26_nepa\Bridge\Microstation\Bridge Design Files\0_OPROJECTS.dgn
14-Dec-2018 12:18 PM

STATE	PROJECT	SHEET NUMBER
NC	BLRI OVER I-26	R67

REINFORCING STEEL SCHEDULE — DIMENSION TABLE

SEGMENT 1-12D BAR LIST

BAR MK	SIZE	TYPE	PIN SZ	LOCATION	QTY	LENGTH	WEIGHT	A	B	C	D	E	F	G	H	J	K	O	R	V or N
*5SE1	5	STR		Longitudinal	138	9'-8"	1391		9'-8"											
*5SE2	5	STR		Trans. top	11	36'-2"	415		36'-2"											
*5SE3	5	STR		Trans. top	11	6'-0"	69		6'-0"											
*5SE4	5	52	0'-3¾"	Trans. top	22	16'-10"	386	9'-1"	7'-9"	7'-4½"	2'-5"									
*5SE5	5	247	0'-3¾"	Trans. top	22	4'-7"	105	2'-10¼"	0'-10"	0'-10"	0'-6¾"	0'-7¾"	0'-5½"	0'-8¾"						
*5SE6	5	STR		Trans. top	22	3'-3"	75		3'-3"											
*7SE7	7	73	0'-5⁵⁄₁₆"	Vert. i.f.	40	7'-6½"	617	6'-4¼"	1'-2"	0'-3"	1'-2½"									
*7SE8	7	52	0'-5⁵⁄₁₆"	Vert. o.f.	40	7'-7"	620	6'-5"	1'-2"	0'-3½"	1'-1¾"									
*7SE9	7	52	0'-5⁵⁄₁₆"	Vert. e.f.	80	6'-2½"	1015	5'-0½"	1'-2"	0'-3½"	1'-1¾"									
*5SE10	5	52	0'-3¾"	Trans. bot.	80	10'-4"	862	9'-6"	0'-10"	0'-2½"	0'-10"									
*6SE11	6	65	0'-4½"	Rail	15	6'-11½"	138	1'-0"	1'-4"	1'-4¼"	1'-5¼"	1'-0"	1'-5"							77°
*6SE12	6	65	0'-4½"	Rail	15	6'-10"	154	1'-0"	1'-8½"	1'-6"	1'-7¼"	1'-0"	1'-7¼"							84°
*5SE13	5	17	0'-3¾"	Rail	8	1'-8"	14		1'-3"	0'-5"										
*5SE14	5	17	0'-3¾"	Rail	10	5'-11½"	53		1'-10½"	1'-4¼"	1'-10½"									
*5SE15	5	17	0'-3¾"	Rail	10	6'-2"	64		1'-10¼"	2'-5½"	1'-10¼"									
*4SE16	4	17	0'-3⅛"	Trans. top	64	7'-5"	317		4'-0"	0'-5"	3'-0"									
*4SE17	4	S4	0'-3⅛"	Trans. bot.	32	3'-2½"	69	0'-8"	0'-7"	0'-8½"	0'-7"	0'-8"								
				SUBTOTAL			6364 LBS													

ERECTION ANCHOR BLOCK BAR LIST

BAR MK	SIZE	TYPE	PIN SZ	LOCATION	QTY	LENGTH	WEIGHT	A	B	C	D	E	F	G	H	J	K	O	R	V or N
*6DE1	6	S4	0'-4½"	Trans. bot.	6	8'-2½"	74	1'-0"	1'-6¾"	3'-1"	1'-6¾"	1'-0"								
*6DE2	6	S4	0'-4½"	Long. bot.	6	6'-11"	62	1'-0"	1'-7"	1'-9"	1'-7"	1'-0"								
*6DE3	6	239	0'-4½"	Trans. top	12	7'-3"	131	1'-0"	2'-5¼"	1'-6¾"	1'-2¾"	1'-0"	76°	90°	14°					
*6DE4	6	S4	0'-4½"	Stirrups	2	8'-3½"	25	1'-0"	2'-4"	1'-7½"	2'-4"	1'-0"								
*6DE5	6	S4	0'-4½"	Stirrups	2	8'-6½"	26	1'-0"	2'-5½"	1'-7½"	2'-5½"	1'-0"								
*6DE6	6	S4	0'-4½"	Stirrups	2	8'-10"	27	1'-0"	2'-7¼"	1'-7½"	2'-7¼"	1'-0"								
*6DE7	6	S4	0'-4½"	Long. top	4	8'-11"	54	1'-0"	2'-7¾"	1'-7½"	2'-7¾"	1'-0"								
				SUBTOTAL			398 LBS													

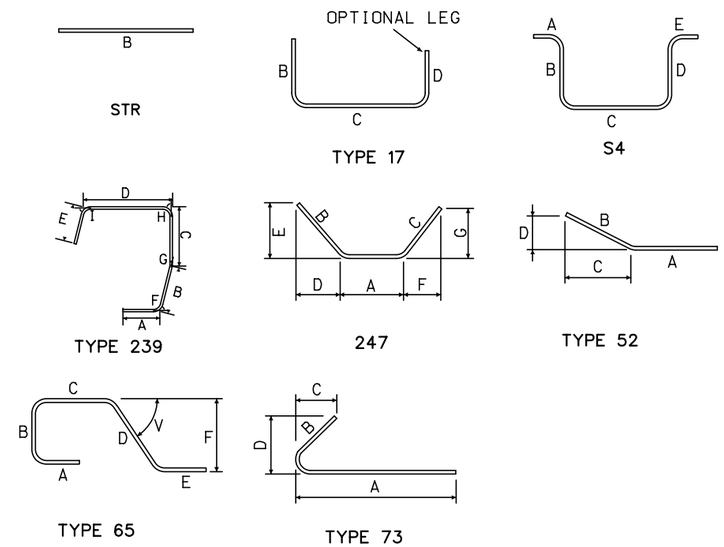

U.S. DEPARTMENT OF TRANSPORTATION
FEDERAL HIGHWAY ADMINISTRATION
EASTERN FEDERAL LANDS HIGHWAY DIVISION

BLUE RIDGE PARKWAY

BRIDGE OVER I-26

SEGMENT 1-12D BAR LIST

NO.	DATE	BY	REVISIONS	NO.	DATE	BY	REVISIONS	DESIGNED BY	DRAWN BY	CHECKED BY	SCALE	PROJECT TEAM LEADER	BRIDGE PLAN SHEET	DATE	BRP NO.
								CC	CC	LE	No Scale	George Choubah	67 of 228	December 2018	BRP-1265

ACTUAL FILE:R67_BLRI_I26_SEGMENT 1-12D BAR LIST.DGN
M:\PROJECTS_STATE_DOT\NC\blri_I26_nepa\Bridge\Microstation\Bridge Design Files\0_OPROJECTS.dgn
14-Dec-2018 12:18 PM

STATE	PROJECT	SHEET NUMBER
NC	BLRI OVER I-26	R68

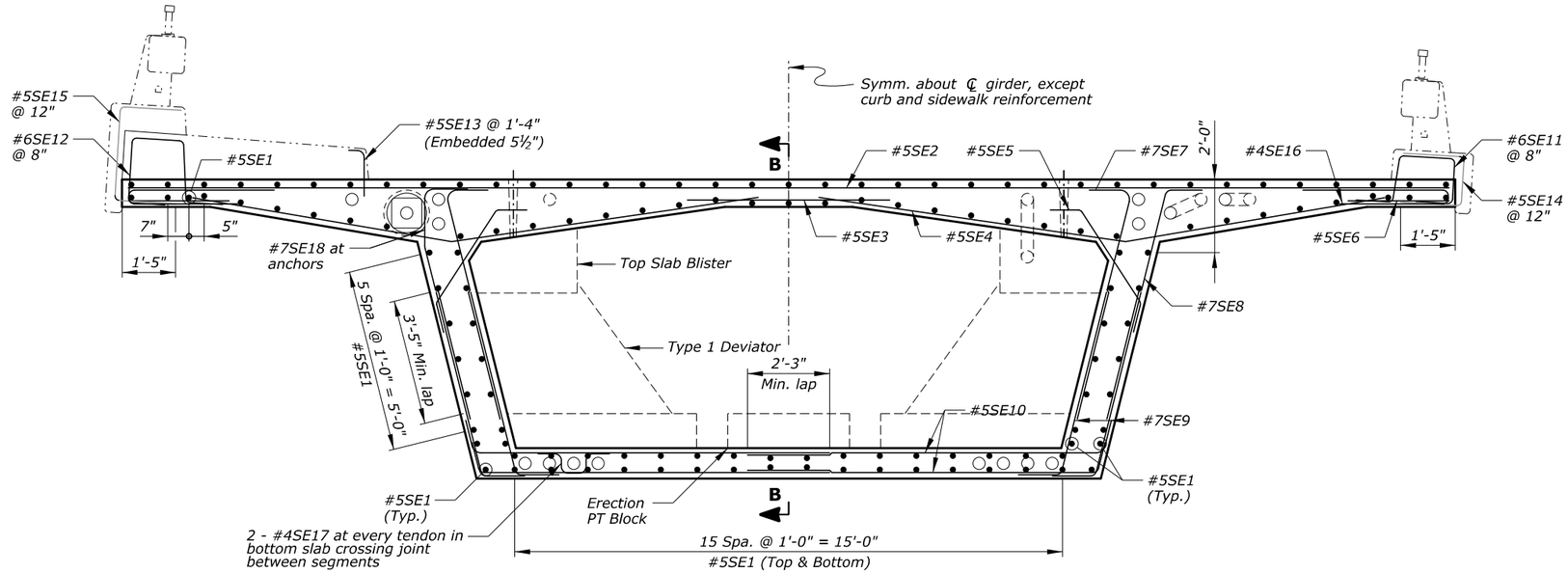

SECTION A-A
Looking upstation

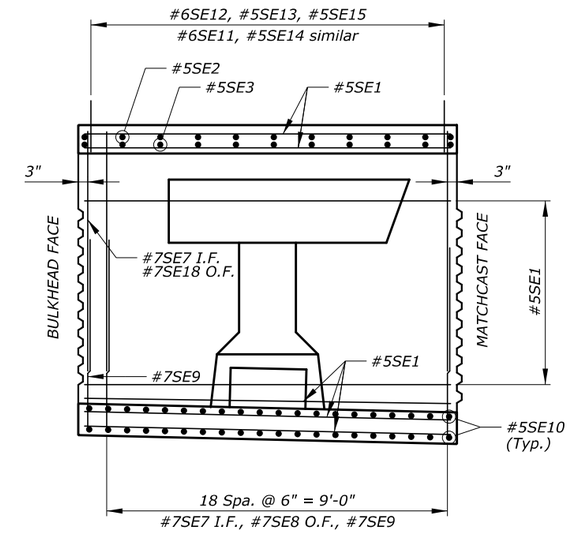

SECTION B-B

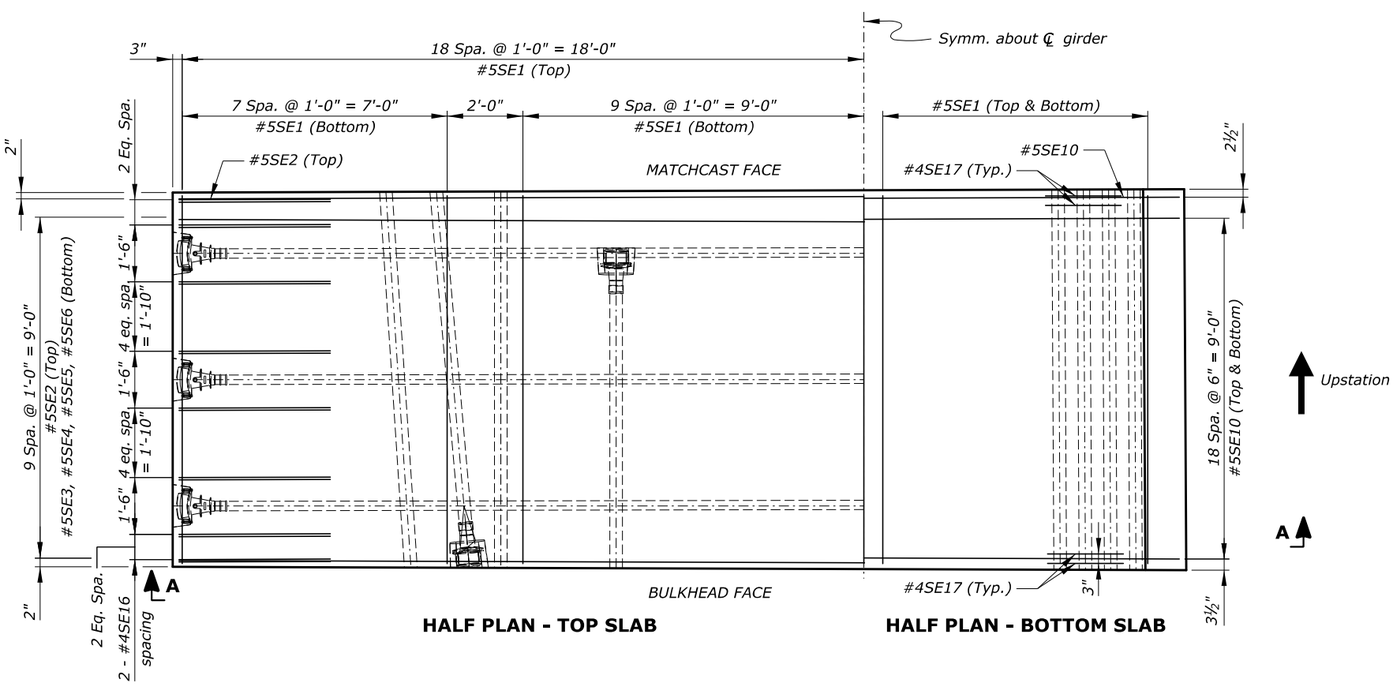

HALF PLAN - TOP SLAB

HALF PLAN - BOTTOM SLAB

Notes:

1. *Minimum concrete cover is 2½" at top face of deck, and 1½" at all other faces, unless otherwise noted.*
2. *Adjust slightly the location of reinforcement to avoid conflict with post-tensioning ducts.*
3. *For information on reinforcement in erection post-tensioning anchor blocks, see "ERECTION ANCHOR BLOCK" sheet.*
4. *For information on reinforcement in the top slab blister, see "TOP SLAB BLISTER" sheet. For information on reinforcement in the type 1 deviator, see "TYPE 1 DEVIATOR" sheet.*

Key:

e.f. = each face
I.F. = inside face
O.F. = outside face

U.S. DEPARTMENT OF TRANSPORTATION
FEDERAL HIGHWAY ADMINISTRATION
EASTERN FEDERAL LANDS HIGHWAY DIVISION

BLUE RIDGE PARKWAY

BRIDGE OVER I-26

SEGMENT 1-11D REINFORCEMENT

NO.	DATE	BY	REVISIONS	NO.	DATE	BY	REVISIONS	DESIGNED BY	DRAWN BY	CHECKED BY	SCALE	PROJECT TEAM LEADER	BRIDGE PLAN SHEET	DATE	BRP NO.
								CC/CWN	BK/CC	HC	½" = 1'-0"	George Choubah	68 of 228	December 2018	BRP-1265

ACTUAL FILE:R68_BLRI_I26_SEGMENT 1-11D REINF.DGN
M:\PROJECTS_STATE_DOT\NC\blri_I26_repo\Bridge\Microstation\Bridge Design Files\0_OPROJECTS.dgn
14-Dec-2018 12:18 PM

STATE	PROJECT	SHEET NUMBER
NC	BLRI OVER I-26	R69

REINFORCING STEEL SCHEDULE — DIMENSION TABLE

SEGMENT 1-11D BAR LIST

BAR MK	SIZE	TYPE	PIN SZ	LOCATION	QTY	LENGTH	WEIGHT	A	B	C	D	E	F	G	H	J	K	O	R	V or N
*5SE1	5	STR		Longitudinal	136	9′-8″	1371		9′-8″											
*5SE2	5	STR		Trans. top	11	36′-2″	415		36′-2″											
*5SE3	5	STR		Trans. top	11	6′-0″	69		6′-0″											
*5SE4	5	52	0′-3¾″	Trans. top	22	16′-10″	386	9′-1″	7′-9″	7′-4½″	2′-5″									
*5SE5	5	247	0′-3¾″	Trans. top	22	4′-7″	105	2′-10¼″	0′-10″	0′-10″	0′-6¾″	0′-7¾″	0′-5½″	0′-8¾″						
*5SE6	5	STR		Trans. top	22	3′-3″	75		3′-3″											
*7SE7	7	73	0′-5 5/16″	Vert. i.f.	40	7′-7½″	623	6′-5½″	1′-2″	0′-3″	1′-2½″									
*7SE8	7	52	0′-5 5/16″	Vert. o.f.	50	7′-8½″	788	6′-6¼″	1′-2″	0′-3½″	1′-1¾″									
*7SE9	7	52	0′-5 5/16″	Vert. e.f.	92	6′-4½″	1199	5′-2¼″	1′-2″	0′-3½″	1′-1¾″									
*5SE10	5	52	0′-3¾″	Trans. bot.	80	10′-3½″	859	9′-5½″	0′-10″	0′-2½″	0′-10″									
*6SE11	6	65	0′-4½″	Rail	15	6′-1½″	138	1′-0″	1′-4″	1′-4¼″	1′-5¼″	1′-0″	1′-5″							77°
*6SE12	6	65	0′-4½″	Rail	15	6′-10″	154	1′-0″	1′-8½″	1′-6″	1′-7¼″	1′-0″	1′-7¼″							84°
*5SE13	5	17	0′-3¾″	Rail	8	1′-8″	14		1′-3″	0′-5″										
*5SE14	5	17	0′-3¾″	Rail	10	5′-1½″	53		1′-10½″	1′-4¼″	1′-10½″									
*5SE15	5	17	0′-3¾″	Rail	10	6′-2″	64		1′-10¼″	2′-5½″	1′-10¼″									
*4SE16	4	17	0′-3⅛″	Trans. top	64	7′-5″	317		4′-0″	0′-5″	3′-0″									
*4SE17	4	S4	0′-3⅛″	Trans. bot.	32	3′-2½″	69	0′-8″	0′-7″	0′-8½″	0′-7″	0′-8″								
*7SE18	7	55	0′-5 5/16″	Vert. o.f.	2	7′-7½″	31		1′-2″	2′-0″	4′-4½″	1′-1¾″								
				SUBTOTAL			6730 LBS													

ERECTION ANCHOR BLOCK BAR LIST

BAR MK	SIZE	TYPE	PIN SZ	LOCATION	QTY	LENGTH	WEIGHT	A	B	C	D	E	F	G	H	J	K	O	R	V or N
*6DE1	6	S4	0′-4½″	Trans. bot.	6	8′-2½″	74	1′-0″	1′-6¾″	3′-1″	1′-6¾″	1′-0″								
*6DE2	6	S4	0′-4½″	Long. bot.	6	6′-11″	62	1′-0″	1′-7″	1′-9″	1′-7″	1′-0″								
				SUBTOTAL			136 LBS													

TYPE 1 DEVIATOR BAR LIST

BAR MK	SIZE	TYPE	PIN SZ	LOCATION	QTY	LENGTH	WEIGHT	A	B	C	D	E	F	G	H	J	K	O	R	V or N
*6VE1	6	52	0′-4½″	Vert.	20	8′-8″	260	6′-4″	2′-4″	1′-9¾″	1′-6″									
*6VE2	6	S4	0′-4½″	Horiz.	2 sets of 5	13′-9½″ to 10′-10½″ at 0′-9″ Incr.	176	1′-0″	5′-3¼″ to 3′-9¾″ at 0′-5″ Incr.	1′-3″	5′-3¼″ to 3′-9¾″ at 0′-5″ Incr.	1′-0″								
*5VE3	5	STR		Vert.	14	1′-11″	28		1′-11″											
*4VE4	4	52	0′-3⅛″	Vert.	24	2′-3″	36	1′-3″	1′-0″	0′-8½″	0′-8¾″									
*5VE5	5	S4	0′-3¾″	Stirrups	20	6′-5½″	135	0′-10″	2′-0″	0′-9¼″	2′-0″	0′-10″								
*5VE6	5	1031	0′-3¾″	Trans.	10	14′-9½″	154	0′-2½″	6′-2¾″	0′-10″	6′-0½″	0′-2½″	0′-9¾″	0′-10″	0′-10″	0′-10″				
*5VE7	5	338	0′-3¾″	Trans.	10	8′-11″	93	6′-1¾″	1′-11½″	0′-10″	0′-2½″	0′-10″								
				SUBTOTAL			892 LBS													

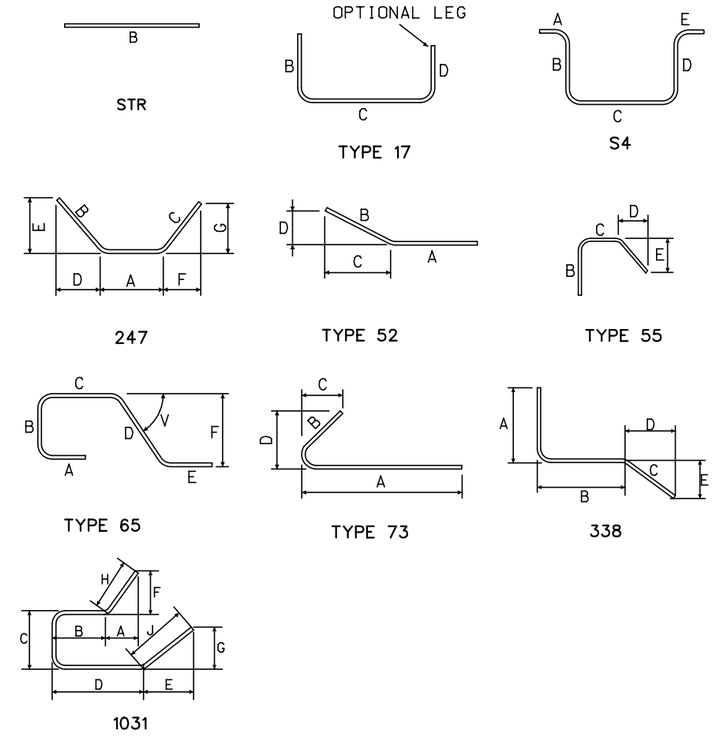

U.S. DEPARTMENT OF TRANSPORTATION
FEDERAL HIGHWAY ADMINISTRATION
EASTERN FEDERAL LANDS HIGHWAY DIVISION

BLUE RIDGE PARKWAY

BRIDGE OVER I-26

SEGMENT 1-11D BAR LIST - 1

NO.	DATE	BY	REVISIONS	NO.	DATE	BY	REVISIONS	DESIGNED BY	DRAWN BY	CHECKED BY	SCALE	PROJECT TEAM LEADER	BRIDGE PLAN SHEET	DATE	BRP NO.
								CC	CC	LE	No Scale	George Choubah	69 of 228	December 2018	BRP-1265

ACTUAL FILE:R69_BLRI_I26_SEGMENT 1-11D BAR LIST - 1.DGN
M:\PROJECTS_STATE_DOT\NC\blri_I26_nepo\Bridge\Microstation\Bridge Design Files\0_OPROJECTS.dgn
14-Dec-2018 12:18 PM

STATE	PROJECT	SHEET NUMBER
NC	BLRI OVER I-26	R70

REINFORCING STEEL SCHEDULE — DIMENSION TABLE

TOP SLAB BLISTER BAR LIST

BAR MK	SIZE	TYPE	PIN SZ	LOCATION	QTY	LENGTH	WEIGHT	A	B	C	D	E	F	G	H	J	K	O	R	V or N
*6TE1	6	17	0′-4½″	Longitudinal	10	10′-8″	160		9′-8″	1′-0″										
*5TE2	5	753	0′-3¾″	Longitudinal	6	12′-11″	81	0′-10″	2′-8¾″	5′-7″	2′-10″	0′-11″	2′-8¾″							72°
*5TE3	5	17	0′-3¾″	Horiz.	2	9′-3½″	19		5′-7¼″	3′-8¼″										
*5TE4	5	17	0′-3¾″	Horiz.	2	9′-6″	20		5′-9½″	3′-8¾″										
*5TE5	5	S4	0′-3¾″	Stirrups	12	8′-7½″	108	0′-10″	2′-9¼″	1′-4¾″	2′-9¼″	0′-10″								
*5TE6	5	79	0′-3¾″	Stirrups	26	8′-3½″	225	0′-10″	2′-9¼″	3′-9¾″	0′-10½″	0′-10¼″								76°
*5TE7	5	S4	0′-3¾″	Stirrups	2	4′-10″	10	0′-10″	1′-0¾″	1′-0½″	1′-0¾″	0′-10″								
*5TE8	5	S4	0′-3¾″	Stirrups	2	4′-11″	10	0′-10″	1′-1¼″	1′-0½″	1′-1¼″	0′-10″								
*5TE9	5	S4	0′-3¾″	Stirrups	2	5′-0½″	11	0′-10″	1′-2″	1′-0½″	1′-2″	0′-10″								
*5TE10	5	S4	0′-3¾″	Stirrups	2	5′-3″	11	0′-10″	1′-3¼″	1′-0½″	1′-3¼″	0′-10″								
*5TE11	5	S4	0′-3¾″	Stirrups	2	5′-6″	11	0′-10″	1′-4¾″	1′-0½″	1′-4¾″	0′-10″								
*5TE12	5	S4	0′-3¾″	Stirrups	2	5′-9″	12	0′-10″	1′-6¼″	1′-0½″	1′-6¼″	0′-10″								
*5TE13	5	S4	0′-3¾″	Stirrups	2	6′-1″	13	0′-10″	1′-8¼″	1′-0½″	1′-8¼″	0′-10″								
*5TE14	5	S4	0′-3¾″	Stirrups	2	6′-3½″	13	0′-10″	1′-9½″	1′-0½″	1′-9½″	0′-10″								
*5TE15	5	S4	0′-3¾″	Stirrups	2	6′-6½″	14	0′-10″	1′-11″	1′-0½″	1′-11″	0′-10″								
*5TE16	5	S4	0′-3¾″	Stirrups	2	6′-9″	14	0′-10″	2′-0¼″	1′-0½″	2′-0¼″	0′-10″								
*5TE17	5	S4	0′-3¾″	Stirrups	2	6′-11½″	15	0′-10″	2′-1½″	1′-0½″	2′-1½″	0′-10″								
*5TE18	5	S4	0′-3¾″	Stirrups	2	7′-2″	15	0′-10″	2′-2¾″	1′-0½″	2′-2¾″	0′-10″								
*5TE19	5	S4	0′-3¾″	Stirrups	2	7′-4½″	15	0′-10″	2′-4″	1′-0½″	2′-4″	0′-10″								
*5TE20	5	S4	0′-3¾″	Stirrups	2	7′-7½″	16	0′-10″	2′-5½″	1′-0½″	2′-5½″	0′-10″								
				SUBTOTAL			793 LBS													

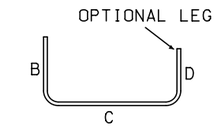

TYPE 17

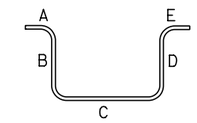

S4

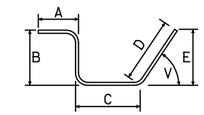

TYPE 79

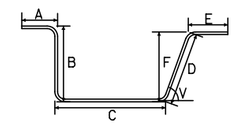

753

U.S. DEPARTMENT OF TRANSPORTATION
FEDERAL HIGHWAY ADMINISTRATION
EASTERN FEDERAL LANDS HIGHWAY DIVISION

BLUE RIDGE PARKWAY

BRIDGE OVER I-26

SEGMENT 1-11D
BAR LIST - 2

NO.	DATE	BY	REVISIONS	NO.	DATE	BY	REVISIONS	DESIGNED BY	DRAWN BY	CHECKED BY	SCALE	PROJECT TEAM LEADER	BRIDGE PLAN SHEET	DATE	BRP NO.
								CC	CC	LE	No Scale	George Choubah	70 of 228	December 2018	BRP-1265

ACTUAL FILE:R70_BLRI_I26_SEGMENT 1-11D BAR LIST - 2.DGN
M:\PROJECTS_STATE_DOT\NC\blri_I26_nepa\Bridge\Microstation\Bridge Design Files\0_OPROJECTS.dgn
14-Dec-2018 12:18 PM

STATE	PROJECT	SHEET NUMBER
NC	BLRI OVER I-26	R71

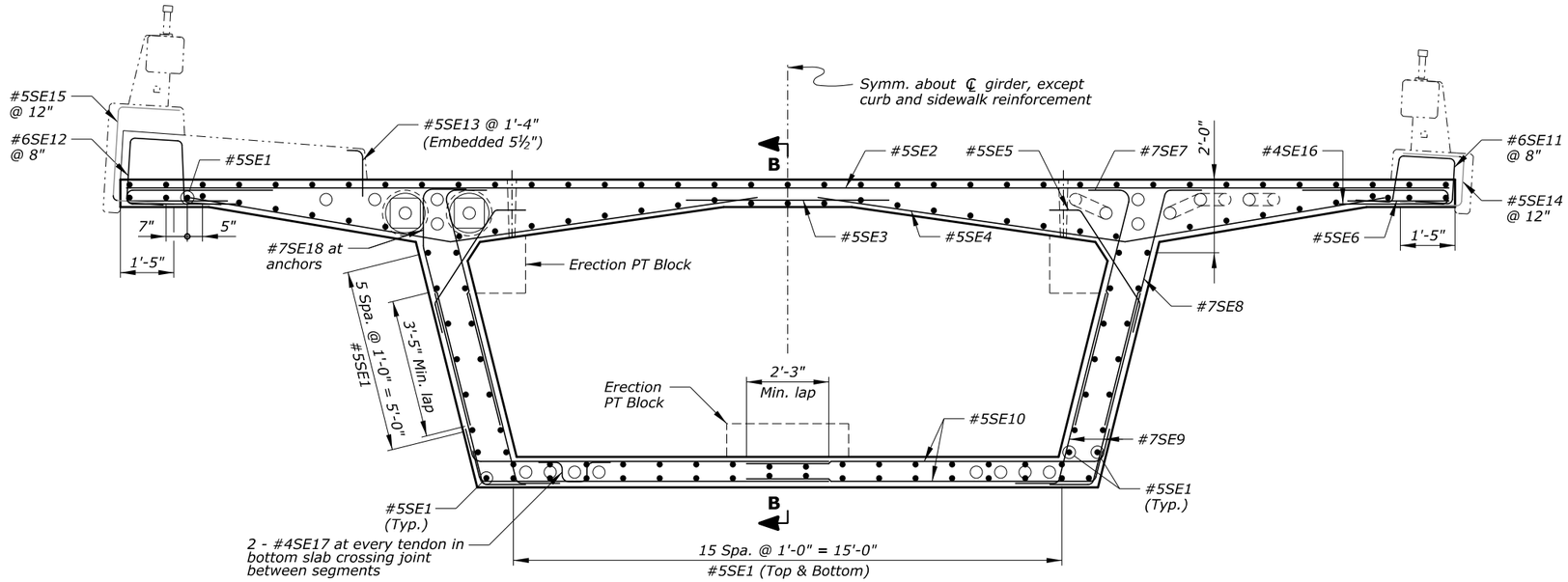

SECTION A-A
Looking upstation

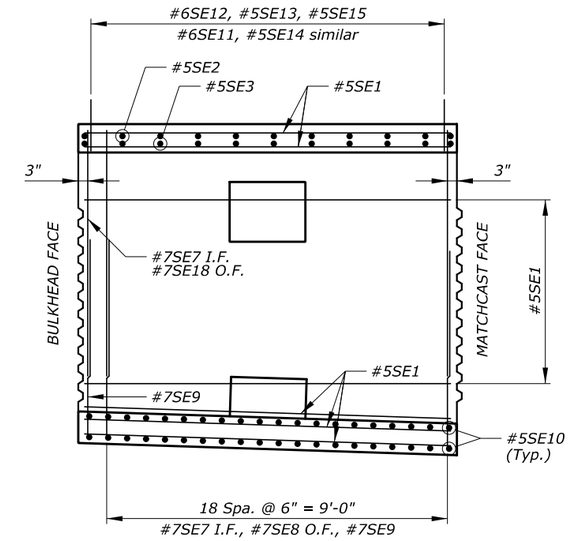

SECTION B-B

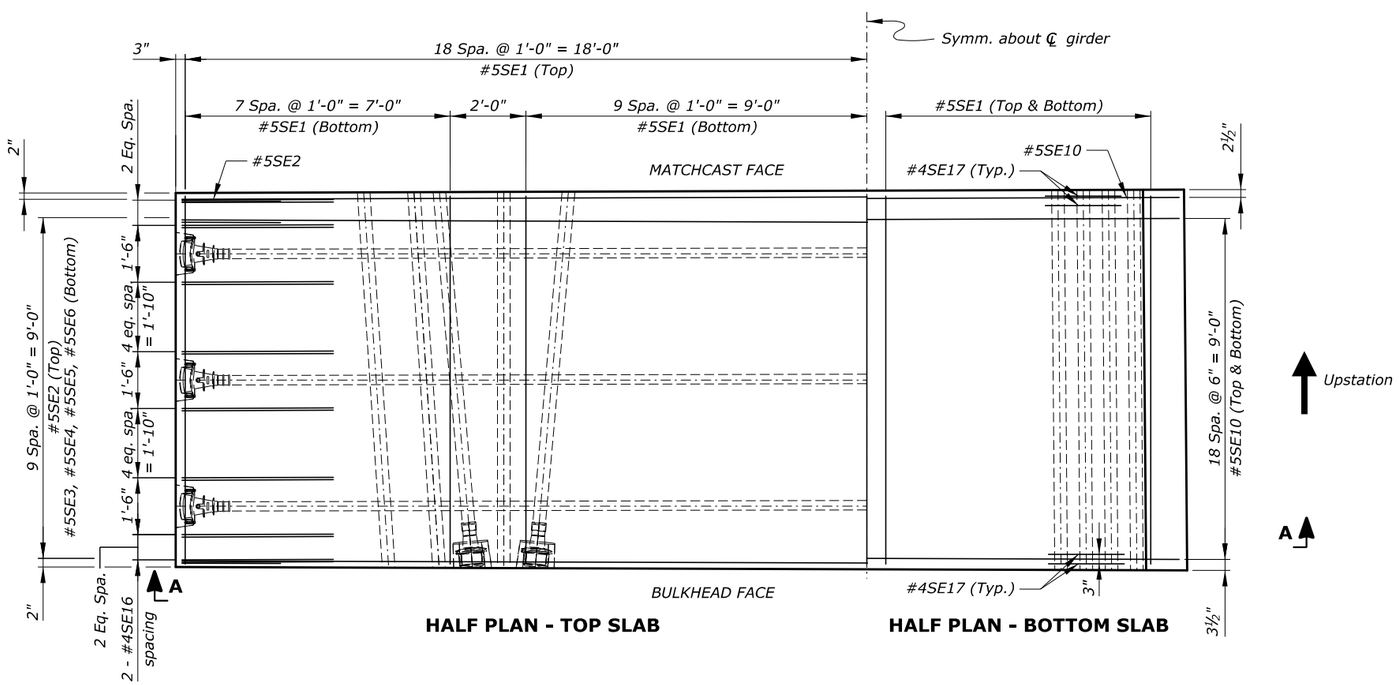

HALF PLAN - TOP SLAB

HALF PLAN - BOTTOM SLAB

Notes:

1. *Minimum concrete cover is 2½" at top face of deck, and 1½" at all other faces, unless otherwise noted.*
2. *Adjust slightly the location of reinforcement to avoid conflict with post-tensioning ducts.*
3. *For information on reinforcement in erection post-tensioning anchor blocks, see "ERECTION ANCHOR BLOCK" sheet.*

Key:

e.f. = each face
I.F. = inside face
O.F. = outside face

U.S. DEPARTMENT OF TRANSPORTATION
FEDERAL HIGHWAY ADMINISTRATION
EASTERN FEDERAL LANDS HIGHWAY DIVISION

BLUE RIDGE PARKWAY

BRIDGE OVER I-26

SEGMENT 1-10D REINFORCEMENT

NO.	DATE	BY	REVISIONS	NO.	DATE	BY	REVISIONS	DESIGNED BY	DRAWN BY	CHECKED BY	SCALE	PROJECT TEAM LEADER	BRIDGE PLAN SHEET	DATE	BRP NO.
								CC/CWN	BK/CC	HC	½" = 1'-0"	George Choubah	71 of 228	December 2018	BRP-1265

ACTUAL FILE:R71_BLRI_I26_SEGMENT 1-10D REINF.DGN
M:\PROJECTS_STATE_DOT\NC\blri_I26_nepa\Bridge\Microstation\Bridge Design Files\0_OPROJECTS.dgn
14-Dec-2018 12:18 PM

STATE	PROJECT	SHEET NUMBER
NC	BLRI OVER I-26	R72

REINFORCING STEEL SCHEDULE — DIMENSION TABLE

SEGMENT 1-10D BAR LIST

BAR MK	SIZE	TYPE	PIN SZ	LOCATION	QTY	LENGTH	WEIGHT	A	B	C	D	E	F	G	H	J	K	O	R	V or N
*5SE1	5	STR		Longitudinal	136	9'-8"	1371		9'-8"											
*5SE2	5	STR		Trans. top	11	36'-2"	415		36'-2"											
*5SE3	5	STR		Trans. top	11	6'-0"	69		6'-0"											
*5SE4	5	52	0'-3¾"	Trans. top	22	16'-10"	386	9'-1"	7'-9"	7'-4½"	2'-5"									
*5SE5	5	247	0'-3¾"	Trans. top	22	4'-7"	105	2'-10¼"	0'-10"	0'-10"	0'-6¾"	0'-7¾"	0'-5½"	0'-8¾"						
*5SE6	5	STR		Trans. top	22	3'-3"	75		3'-3"											
*7SE7	7	73	0'-5 5/16"	Vert. i.f.	40	7'-9"	634	6'-7"	1'-2"	0'-3"	1'-2½"									
*7SE8	7	52	0'-5 5/16"	Vert. o.f.	38	7'-10"	608	6'-7¾"	1'-2"	0'-3½"	1'-1¾"									
*7SE9	7	52	0'-5 5/16"	Vert. e.f.	80	6'-6½"	1070	5'-4¾"	1'-2"	0'-3½"	1'-1¾"									
*5SE10	5	52	0'-3¾"	Trans. bot.	80	10'-3"	855	9'-4¾"	0'-10"	0'-2½"	0'-10"									
*6SE11	6	65	0'-4½"	Rail	15	6'-11½"	138	1'-0"	1'-4"	1'-4¼"	1'-5¼"	1'-0"	1'-5"							77°
*6SE12	6	65	0'-4½"	Rail	15	6'-10"	154	1'-0"	1'-8½"	1'-6"	1'-7¼"	1'-0"	1'-7¼"							84°
*5SE13	5	17	0'-3¾"	Rail	8	1'-8"	14		1'-3"	0'-5"										
*5SE14	5	17	0'-3¾"	Rail	10	5'-11½"	53		1'-10½"	1'-4¼"	1'-10½"									
*5SE15	5	17	0'-3¾"	Rail	10	6'-2"	64		1'-10¼"	2'-5½"	1'-10¼"									
*4SE16	4	17	0'-3⅛"	Trans. top	64	7'-5"	317		4'-0"	0'-5"	3'-0"									
*4SE17	4	S4	0'-3⅛"	Trans. bot.	32	3'-2½"	69	0'-8"	0'-7"	0'-8½"	0'-7"	0'-8"								
*7SE18	7	55	0'-5 5/16"	Vert. o.f.	2	7'-9"	32		1'-2"	2'-0"	4'-5¾"	1'-2¼"								
				SUBTOTAL			6429 LBS													

ERECTION ANCHOR BLOCK BAR LIST

BAR MK	SIZE	TYPE	PIN SZ	LOCATION	QTY	LENGTH	WEIGHT	A	B	C	D	E	F	G	H	J	K	O	R	V or N
*6DE1	6	S4	0'-4½"	Trans. bot.	6	8'-2½"	74	1'-0"	1'-6¾"	3'-1"	1'-6¾"	1'-0"								
*6DE2	6	S4	0'-4½"	Long. bot.	6	6'-11"	62	1'-0"	1'-7"	1'-9"	1'-7"	1'-0"								
*6DE3	6	239	0'-4½"	Trans. top	12	7'-3"	131	1'-0"	2'-5¼"	1'-6¾"	1'-2¾"	1'-0"	76°	90°	14°					
*6DE4	6	S4	0'-4½"	Stirrups	2	8'-3½"	25	1'-0"	2'-4"	1'-7½"	2'-4"	1'-0"								
*6DE5	6	S4	0'-4½"	Stirrups	2	8'-6½"	26	1'-0"	2'-5½"	1'-7½"	2'-5½"	1'-0"								
*6DE6	6	S4	0'-4½"	Stirrups	2	8'-10"	27	1'-0"	2'-7¼"	1'-7½"	2'-7¼"	1'-0"								
*6DE7	6	S4	0'-4½"	Long. top	4	8'-11"	54	1'-0"	2'-7¾"	1'-7½"	2'-7¾"	1'-0"								
				SUBTOTAL			398 LBS													

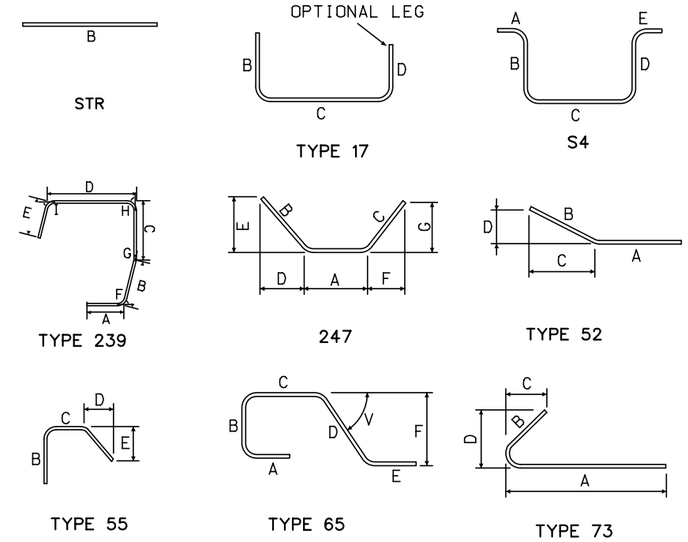

U.S. DEPARTMENT OF TRANSPORTATION
FEDERAL HIGHWAY ADMINISTRATION
EASTERN FEDERAL LANDS HIGHWAY DIVISION

BLUE RIDGE PARKWAY

BRIDGE OVER I-26

SEGMENT 1-10D BAR LIST

NO.	DATE	BY	REVISIONS	NO.	DATE	BY	REVISIONS	DESIGNED BY	DRAWN BY	CHECKED BY	SCALE	PROJECT TEAM LEADER	BRIDGE PLAN SHEET	DATE	BRP NO.
								CC	CC	LE	No Scale	George Choubah	72 of 228	December 2018	BRP-1265

ACTUAL FILE:R72_BLRI_I26_SEGMENT 1-10D BAR LIST.DGN
M:\PROJECTS_STATE_DOT\NC\blri_I26_repo\Bridge\Microstation\Bridge Design Files\0_OPROJECTS.dgn
14-Dec-2018 12:18 PM

STATE	PROJECT	SHEET NUMBER
NC	BLRI OVER I-26	R73

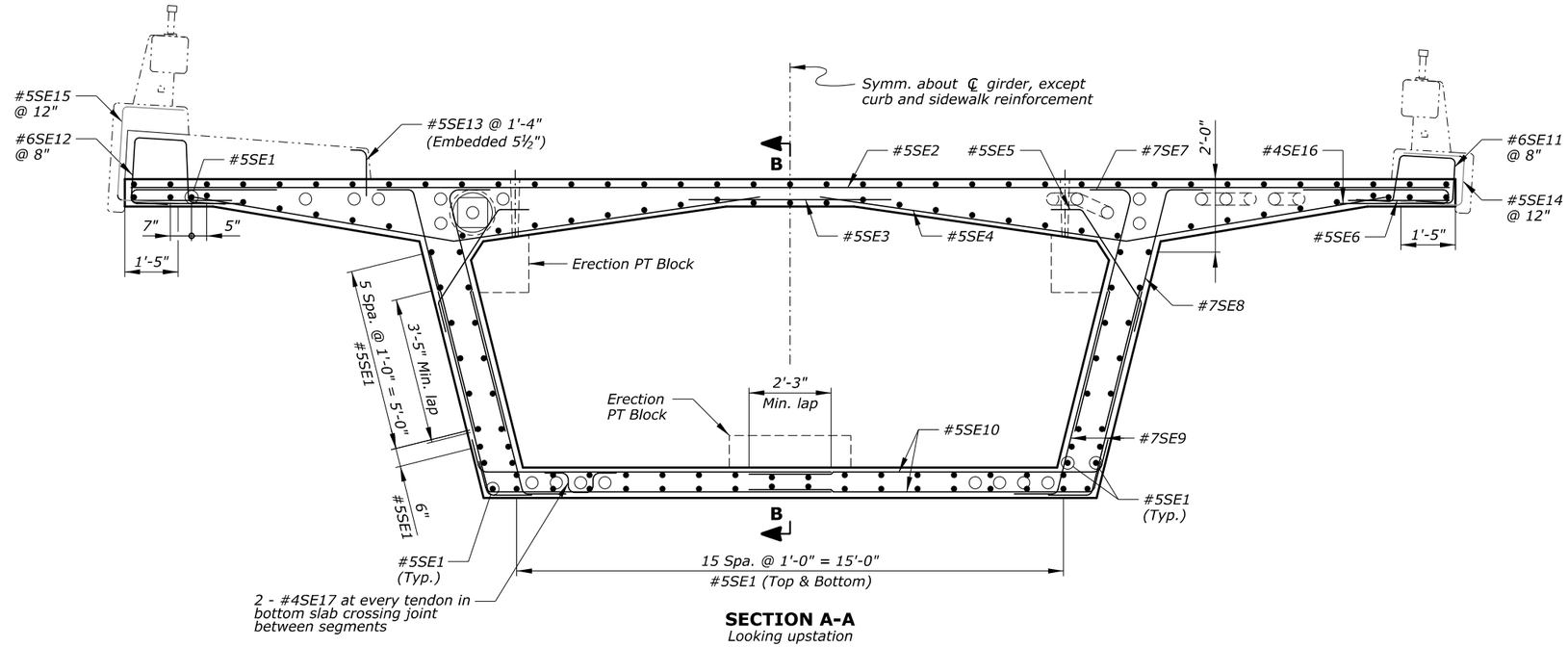

SECTION A-A
Looking upstation

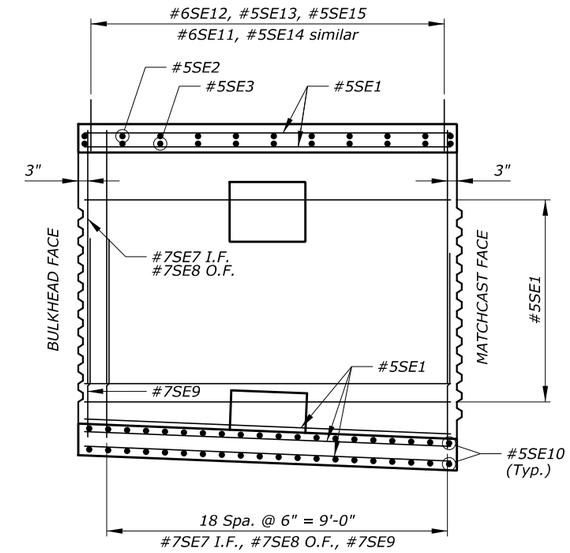

SECTION B-B

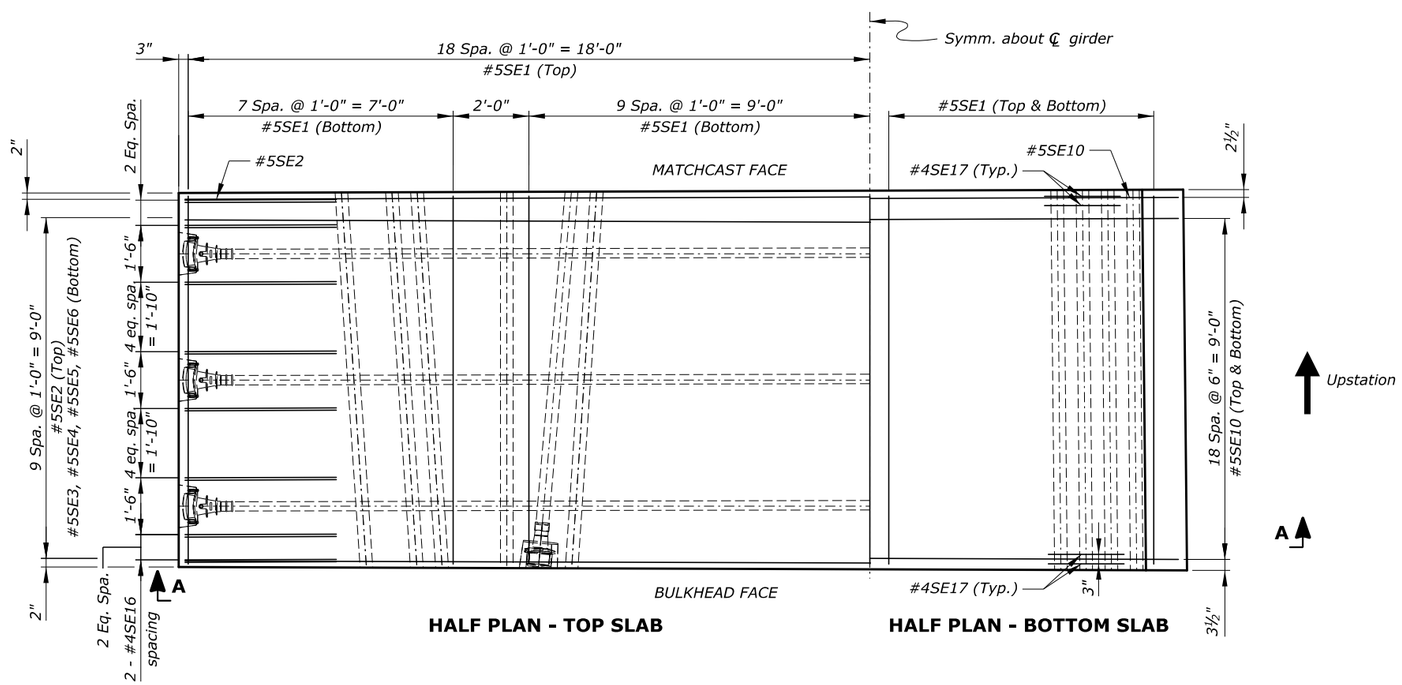

HALF PLAN - TOP SLAB

HALF PLAN - BOTTOM SLAB

Notes:

1. *Minimum concrete cover is 2½" at top face of deck, and 1½" at all other faces, unless otherwise noted.*
2. *Adjust slightly the location of reinforcement to avoid conflict with post-tensioning ducts.*
3. *For information on reinforcement in erection post-tensioning anchor blocks, see "ERECTION ANCHOR BLOCK" sheet.*

Key:

e.f. = each face
I.F. = inside face
O.F. = outside face

U.S. DEPARTMENT OF TRANSPORTATION
FEDERAL HIGHWAY ADMINISTRATION
EASTERN FEDERAL LANDS HIGHWAY DIVISION

BLUE RIDGE PARKWAY

BRIDGE OVER I-26

SEGMENT 1-9D REINFORCEMENT

NO.	DATE	BY	REVISIONS	NO.	DATE	BY	REVISIONS	DESIGNED BY	DRAWN BY	CHECKED BY	SCALE	PROJECT TEAM LEADER	BRIDGE PLAN SHEET	DATE	BRP NO.
								CC/CWN	BK/CC	HC	½" = 1'-0"	George Choubah	73 of 228	December 2018	BRP-1265

ACTUAL FILE:R73_BLRI_I26_SEGMENT 1-9D REINF.DGN
M:\PROJECTS_STATE_DOT\NC\blri_I26_nepa\Bridge\Microstation\Bridge Design Files\0_OPROJECTS.dgn
14-Dec-2018 12:18 PM

STATE	PROJECT	SHEET NUMBER
NC	BLRI OVER I-26	R74

REINFORCING STEEL SCHEDULE — DIMENSION TABLE

SEGMENT 1-9D BAR LIST

BAR MK	SIZE	TYPE	PIN SZ	LOCATION	QTY	LENGTH	WEIGHT	A	B	C	D	E	F	G	H	J	K	O	R	V or N
*5SE1	5	STR		Longitudinal	140	9'-8"	1412		9'-8"											
*5SE2	5	STR		Trans. top	11	36'-2"	415		36'-2"											
*5SE3	5	STR		Trans. top	11	6'-0"	69		6'-0"											
*5SE4	5	52	0'-3¾"	Trans. top	22	16'-10"	386	9'-1"	7'-9"	7'-4½"	2'-5"									
*5SE5	5	247	0'-3¾"	Trans. top	22	4'-7"	105	2'-10¼"	0'-10"	0'-10"	0'-6¾"	0'-7¾"	0'-5½"	0'-8¾"						
*5SE6	5	STR		Trans. top	22	3'-3"	75		3'-3"											
*7SE7	7	73	0'-5 5/16"	Vert. i.f.	40	7'-9½"	637	6'-7½"	1'-2"	0'-3"	1'-2½"									
*7SE8	7	52	0'-5 5/16"	Vert. o.f.	40	7'-10½"	644	6'-8¼"	1'-2"	0'-3½"	1'-1¾"									
*7SE9	7	52	0'-5 5/16"	Vert. e.f.	80	6'-11½"	1138	5'-9¼"	1'-2"	0'-3½"	1'-1¾"									
*5SE10	5	52	0'-3¾"	Trans. bot.	80	10'-2"	848	9'-3¾"	0'-10"	0'-2½"	0'-10"									
*6SE11	6	65	0'-4½"	Rail	15	6'-11½"	138	1'-0"	1'-4"	1'-4¼"	1'-5¼"	1'-0"	1'-5"							77°
*6SE12	6	65	0'-4½"	Rail	15	6'-10"	154	1'-0"	1'-8½"	1'-6"	1'-7¼"	1'-0"	1'-7¼"							84°
*5SE13	5	17	0'-3¾"	Rail	8	1'-8"	14		1'-3"	0'-5"										
*5SE14	5	17	0'-3¾"	Rail	10	5'-1½"	53		1'-10½"	1'-4¼"	1'-10½"									
*5SE15	5	17	0'-3¾"	Rail	10	6'-2"	64		1'-10¼"	2'-5½"	1'-10¼"									
*4SE16	4	17	0'-3⅛"	Trans. top	64	7'-5"	317		4'-0"	0'-5"	3'-0"									
*4SE17	4	S4	0'-3⅛"	Trans. bot.	32	3'-2½"	69	0'-8"	0'-7"	0'-8½"	0'-7"	0'-8"								
				SUBTOTAL			6538 LBS													

ERECTION ANCHOR BLOCK BAR LIST

BAR MK	SIZE	TYPE	PIN SZ	LOCATION	QTY	LENGTH	WEIGHT	A	B	C	D	E	F	G	H	J	K	O	R	V or N
*6DE1	6	S4	0'-4½"	Trans. bot.	6	8'-2½"	74	1'-0"	1'-6¾"	3'-1"	1'-6¾"	1'-0"								
*6DE2	6	S4	0'-4½"	Long. bot.	6	6'-11"	62	1'-0"	1'-7"	1'-9"	1'-7"	1'-0"								
*6DE3	6	239	0'-4½"	Trans. top	12	7'-3"	131	1'-0"	2'-5¼"	1'-6¾"	1'-2¾"	1'-0"	76°	90°	14°					
*6DE4	6	S4	0'-4½"	Stirrups	2	8'-3½"	25	1'-0"	2'-4"	1'-7½"	2'-4"	1'-0"								
*6DE5	6	S4	0'-4½"	Stirrups	2	8'-6½"	26	1'-0"	2'-5½"	1'-7½"	2'-5½"	1'-0"								
*6DE6	6	S4	0'-4½"	Stirrups	2	8'-10"	27	1'-0"	2'-7¼"	1'-7½"	2'-7¼"	1'-0"								
*6DE7	6	S4	0'-4½"	Long. top	4	8'-11"	54	1'-0"	2'-7¾"	1'-7½"	2'-7¾"	1'-0"								
				SUBTOTAL			398 LBS													

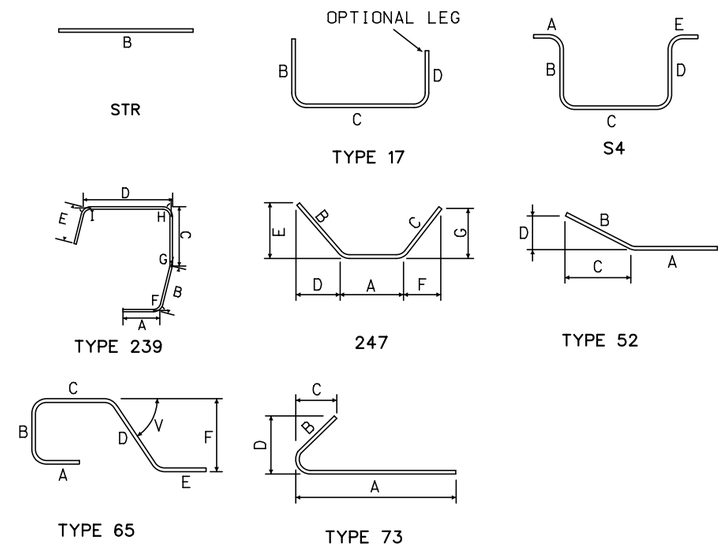

U.S. DEPARTMENT OF TRANSPORTATION
FEDERAL HIGHWAY ADMINISTRATION
EASTERN FEDERAL LANDS HIGHWAY DIVISION

BLUE RIDGE PARKWAY

BRIDGE OVER I-26

SEGMENT 1-9D BAR LIST

NO.	DATE	BY	REVISIONS	NO.	DATE	BY	REVISIONS	DESIGNED BY	DRAWN BY	CHECKED BY	SCALE	PROJECT TEAM LEADER	BRIDGE PLAN SHEET	DATE	BRP NO.
								CC	CC	LE	No Scale	George Choubah	74 of 228	December 2018	BRP-1265

ACTUAL FILE:R74_BLRI_I26_SEGMENT 1-9D BAR LIST.DGN
M:\PROJECTS_STATE_DOT\NC\blri_I26_nepa\Bridge\Microstation\Bridge Design Files\0_OPROJECTS.dgn
14-Dec-2018 12:18 PM

STATE	PROJECT	SHEET NUMBER
NC	BLRI OVER I-26	R75

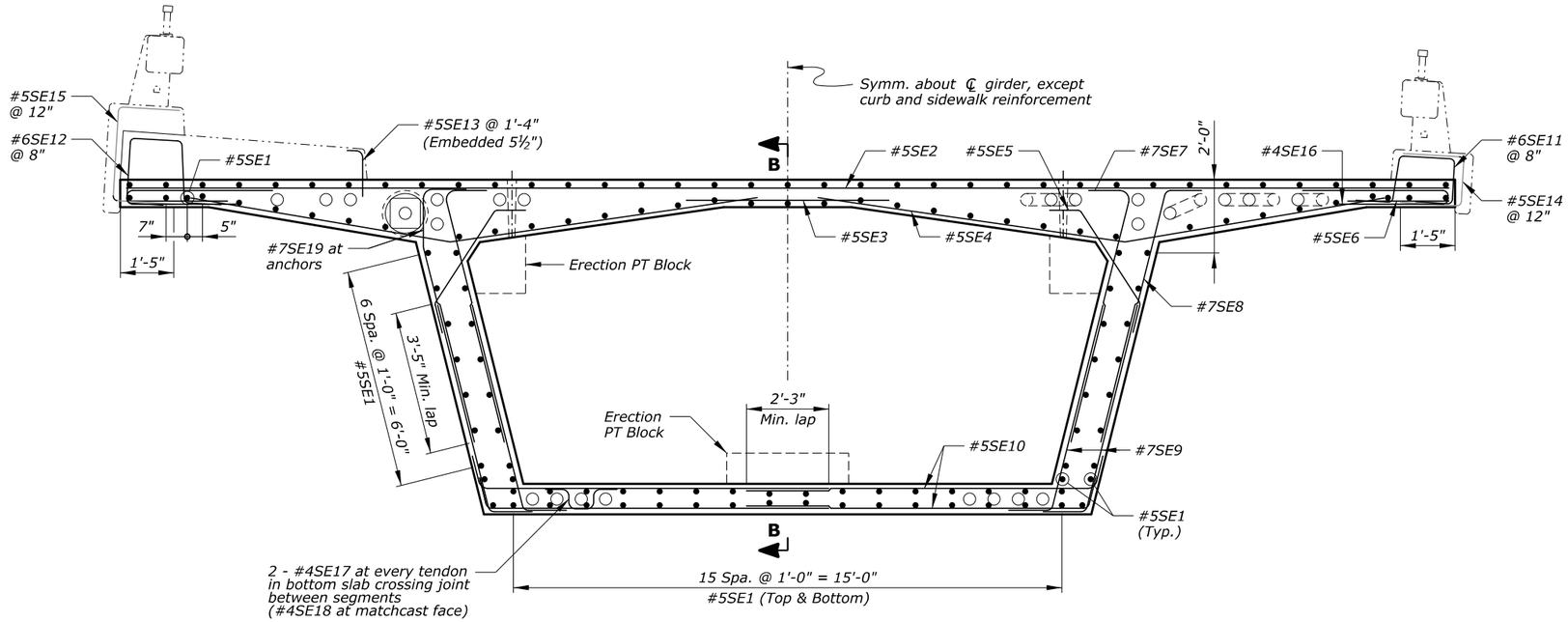

SECTION A-A
Looking upstation

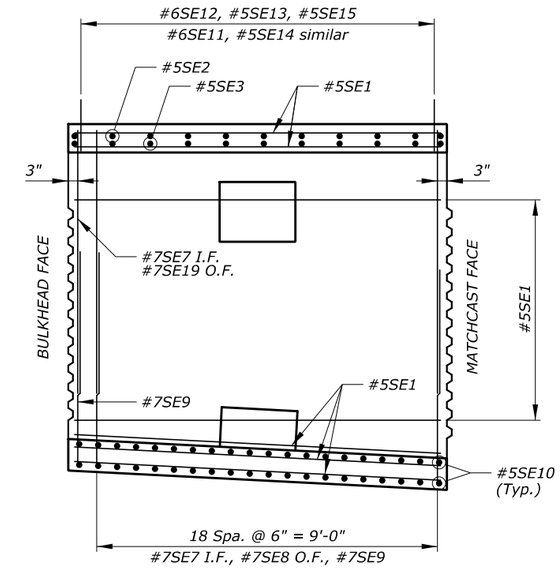

SECTION B-B

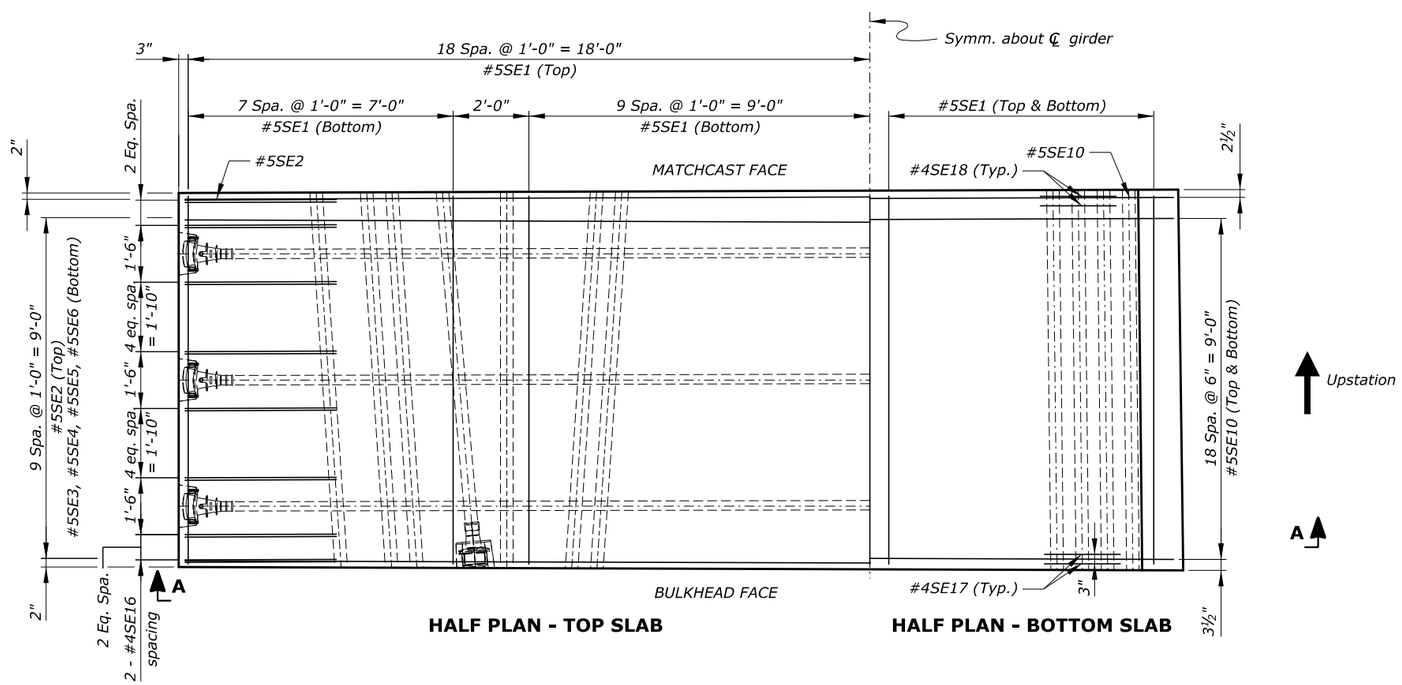

HALF PLAN - TOP SLAB

HALF PLAN - BOTTOM SLAB

Notes:

1. *Minimum concrete cover is 2½" at top face of deck, and 1½" at all other faces, unless otherwise noted.*
2. *Adjust slightly the location of reinforcement to avoid conflict with post-tensioning ducts.*
3. *For information on reinforcement in erection post-tensioning anchor blocks, see "ERECTION ANCHOR BLOCK" sheet.*

Key:

e.f. = each face
I.F. = inside face
O.F. = outside face

U.S. DEPARTMENT OF TRANSPORTATION
FEDERAL HIGHWAY ADMINISTRATION
EASTERN FEDERAL LANDS HIGHWAY DIVISION

BLUE RIDGE PARKWAY

BRIDGE OVER I-26

SEGMENT 1-8D REINFORCEMENT

NO.	DATE	BY	REVISIONS	NO.	DATE	BY	REVISIONS	DESIGNED BY	DRAWN BY	CHECKED BY	SCALE	PROJECT TEAM LEADER	BRIDGE PLAN SHEET	DATE	BRP NO.
								CC/CWN	BK/CC	HC	½" = 1'-0"	George Choubah	75 of 228	December 2018	BRP-1265

ACTUAL FILE:R75_BLRI_I26_SEGMENT 1-8D REINF.DGN
M:\PROJECTS_STATE_DOT\NC\blri_I26_nepa\Bridge\Microstation\Bridge Design Files\0_OPROJECTS.dgn
14-Dec-2018 12:18 PM

STATE	PROJECT	SHEET NUMBER
NC	BLRI OVER I-26	R76

REINFORCING STEEL SCHEDULE — DIMENSION TABLE

SEGMENT 1-8D BAR LIST

BAR MK	SIZE	TYPE	PIN SZ	LOCATION	QTY	LENGTH	WEIGHT	A	B	C	D	E	F	G	H	J	K	O	R	V or N
*5SE1	5	STR		Longitudinal	140	9'-8"	1412		9'-8"											
*5SE2	5	STR		Trans. top	11	36'-2"	415		36'-2"											
*5SE3	5	STR		Trans. top	11	6'-0"	69		6'-0"											
*5SE4	5	52	0'-3¾"	Trans. top	22	16'-10"	386	9'-1"	7'-9"	7'-4½"	2'-5"									
*5SE5	5	247	0'-3¾"	Trans. top	22	4'-7"	105	2'-10¼"	0'-10"	0'-10"	0'-6¾"	0'-7¾"	0'-5½"	0'-8¾"						
*5SE6	5	STR		Trans. top	22	3'-3"	75		3'-3"											
*7SE7	7	73	0'-5 5/16"	Vert. i.f.	40	8'-3"	675	7'-1"	1'-2"	0'-3"	1'-2½"									
*7SE8	7	52	0'-5 5/16"	Vert. o.f.	38	8'-3½"	644	7'-1¾"	1'-2"	0'-3½"	1'-1¾"									
*7SE9	7	52	0'-5 5/16"	Vert. e.f.	80	7'-0"	1145	5'-10"	1'-2"	0'-3½"	1'-1¾"									
*5SE10	5	52	0'-3¾"	Trans. bot.	80	10'-0½"	838	9'-2½"	0'-10"	0'-2½"	0'-10"									
*6SE11	6	65	0'-4½"	Rail	15	6'-1½"	138	1'-0"	1'-4"	1'-4¼"	1'-5¼"	1'-0"	1'-5"							77°
*6SE12	6	65	0'-4½"	Rail	15	6'-10"	154	1'-0"	1'-8½"	1'-6"	1'-7¼"	1'-0"	1'-7¼"							84°
*5SE13	5	17	0'-3¾"	Rail	8	1'-8"	14		1'-3"	0'-5"										
*5SE14	5	17	0'-3¾"	Rail	10	5'-1½"	53		1'-10½"	1'-4¼"	1'-10½"									
*5SE15	5	17	0'-3¾"	Rail	10	6'-2"	64		1'-10¼"	2'-5½"	1'-10¼"									
*4SE16	4	17	0'-3⅛"	Trans. top	64	7'-5"	317		4'-0"	0'-5"	3'-0"									
*4SE17	4	S4	0'-3⅛"	Trans. bot.	16	3'-2½"	34	0'-8"	0'-7"	0'-8½"	0'-7"	0'-8"								
*4SE18	4	S4	0'-3⅛"	Trans. bot.	16	3'-4½"	36	0'-8"	0'-8"	0'-8½"	0'-8"	0'-8"								
*7SE19	7	55	0'-5 5/16"	Vert. o.f.	2	8'-3"	34		1'-2"	2'-0"	4'-11¾"	1'-3¾"								
				SUBTOTAL			6607 LBS													

ERECTION ANCHOR BLOCK BAR LIST

BAR MK	SIZE	TYPE	PIN SZ	LOCATION	QTY	LENGTH	WEIGHT	A	B	C	D	E	F	G	H	J	K	O	R	V or N
*6DE1	6	S4	0'-4½"	Trans. bot.	6	8'-2½"	74	1'-0"	1'-6¾"	3'-1"	1'-6¾"	1'-0"								
*6DE2	6	S4	0'-4½"	Long. bot.	6	6'-11"	62	1'-0"	1'-7"	1'-9"	1'-7"	1'-0"								
*6DE3	6	239	0'-4½"	Trans. top	12	7'-3"	131	1'-0"	2'-5¼"	1'-6¾"	1'-2¾"	1'-0"	76°	90°	14°					
*6DE4	6	S4	0'-4½"	Stirrups	2	8'-3½"	25	1'-0"	2'-4"	1'-7½"	2'-4"	1'-0"								
*6DE5	6	S4	0'-4½"	Stirrups	2	8'-6½"	26	1'-0"	2'-5½"	1'-7½"	2'-5½"	1'-0"								
*6DE6	6	S4	0'-4½"	Stirrups	2	8'-10"	27	1'-0"	2'-7¼"	1'-7½"	2'-7¼"	1'-0"								
*6DE7	6	S4	0'-4½"	Long. top	4	8'-11"	54	1'-0"	2'-7¾"	1'-7½"	2'-7¾"	1'-0"								
				SUBTOTAL			398 LBS													

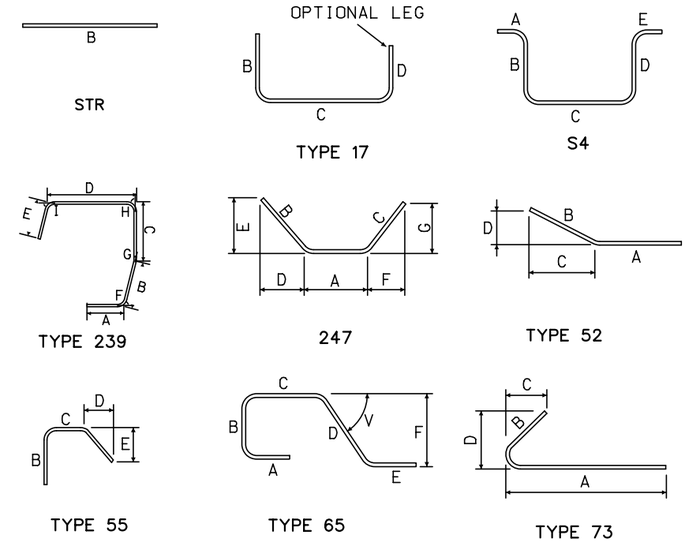

U.S. DEPARTMENT OF TRANSPORTATION
FEDERAL HIGHWAY ADMINISTRATION
EASTERN FEDERAL LANDS HIGHWAY DIVISION

BLUE RIDGE PARKWAY

BRIDGE OVER I-26

SEGMENT 1-8D BAR LIST

NO.	DATE	BY	REVISIONS	NO.	DATE	BY	REVISIONS	DESIGNED BY	DRAWN BY	CHECKED BY	SCALE	PROJECT TEAM LEADER	BRIDGE PLAN SHEET	DATE	BRP NO.
								CC	CC	LE	No Scale	George Choubah	76 of 228	December 2018	BRP-1265

ACTUAL FILE:R76_BLRI_I26_SEGMENT 1-8D BAR LIST.DGN
M:\PROJECTS_STATE_DOT\NC\blri_I26_repo\Bridge\Microstation\Bridge Design Files\0_OPROJECTS.dgn
14-Dec-2018 12:18 PM

STATE	PROJECT	SHEET NUMBER
NC	BLRI OVER I-26	R77

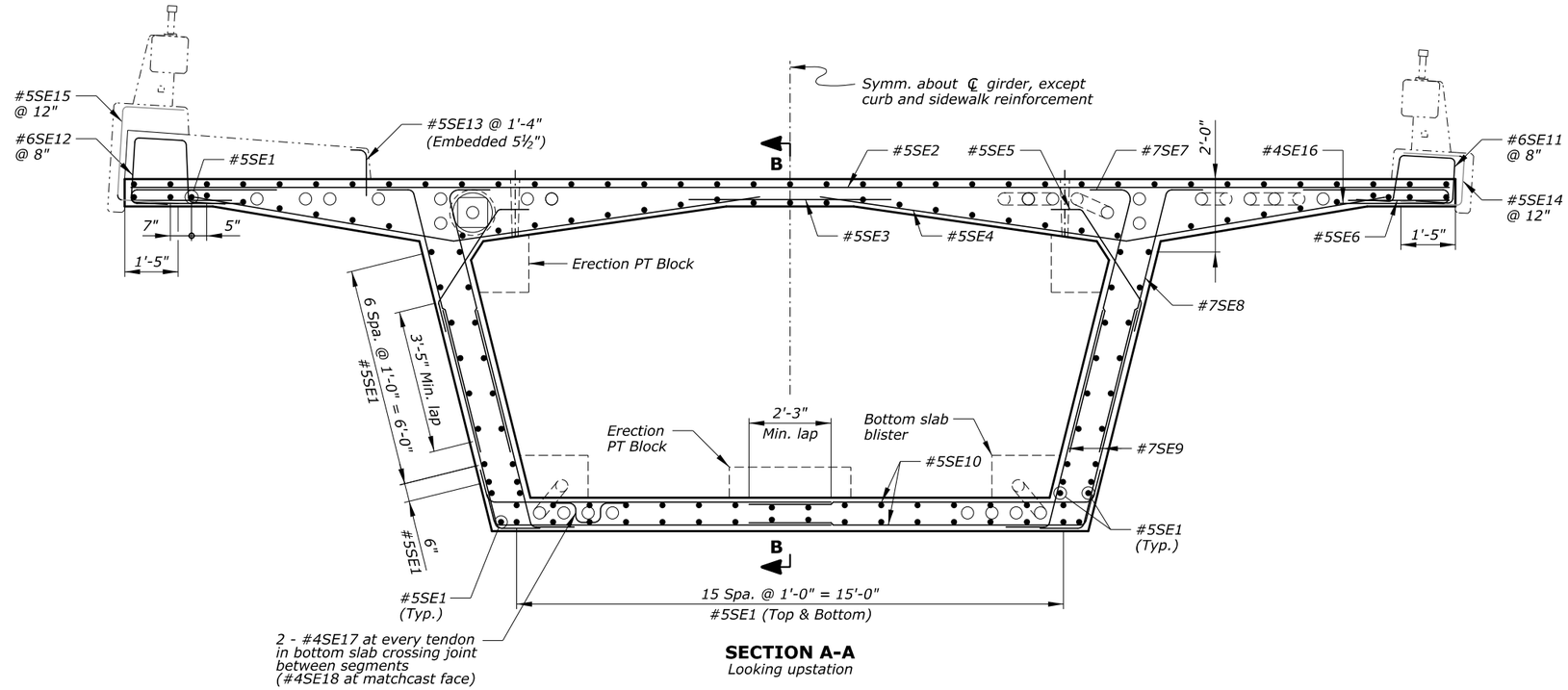

SECTION A-A
Looking upstation

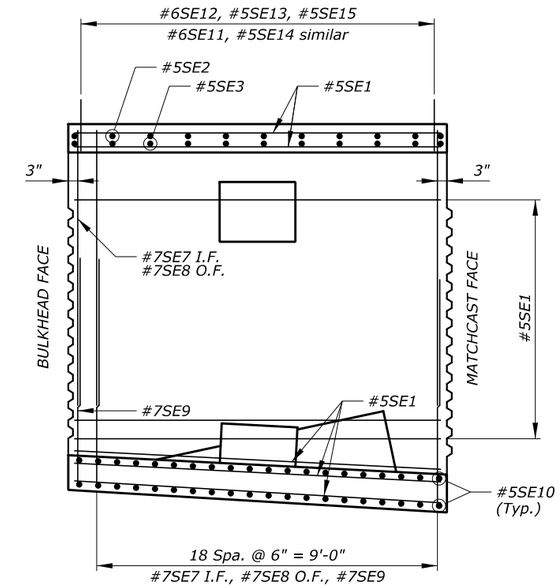

SECTION B-B

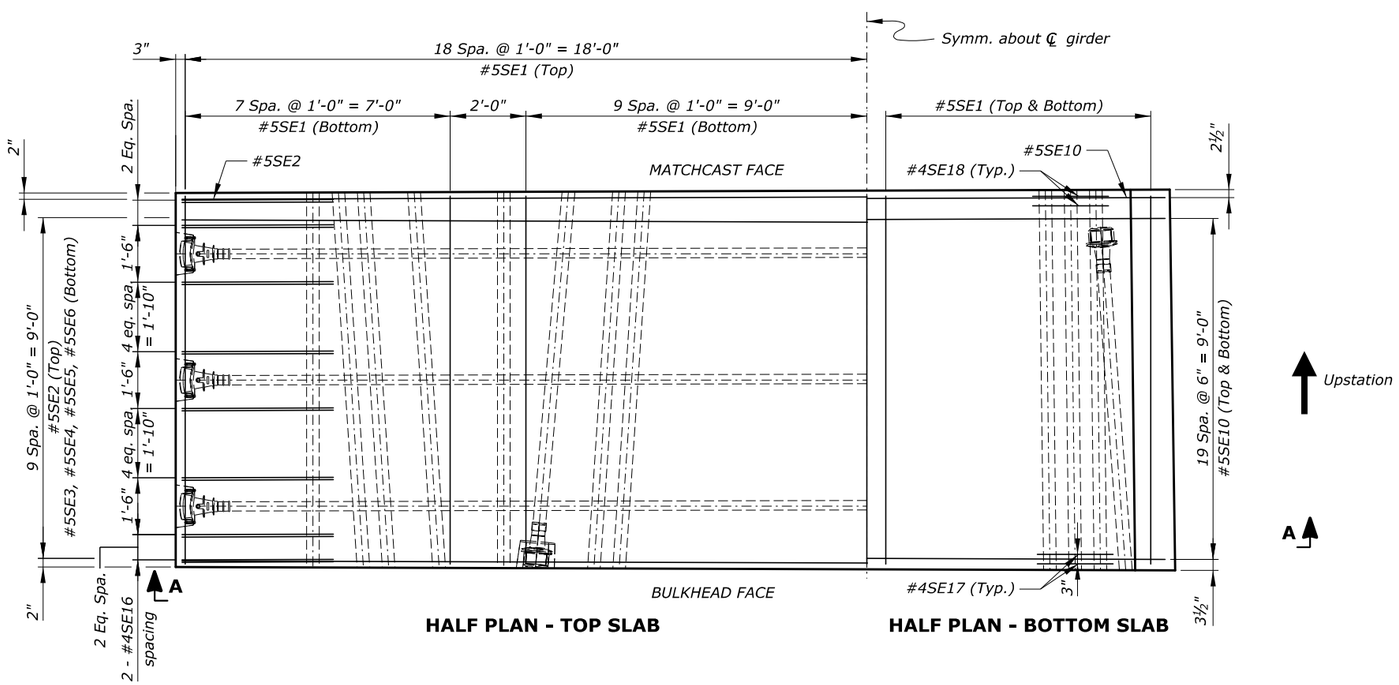

HALF PLAN - TOP SLAB

HALF PLAN - BOTTOM SLAB

Notes:

1. *Minimum concrete cover is 2½" at top face of deck, and 1½" at all other faces, unless otherwise noted.*
2. *Adjust slightly the location of reinforcement to avoid conflict with post-tensioning ducts.*
3. *For information on reinforcement in erection post-tensioning anchor blocks, see "ERECTION ANCHOR BLOCK" sheet.*
4. *For information on reinforcement in the bottom slab blister, see "BOTTOM SLAB BLISTER" sheet.*

Key:

e.f. = each face
I.F. = inside face
O.F. = outside face

U.S. DEPARTMENT OF TRANSPORTATION
FEDERAL HIGHWAY ADMINISTRATION
EASTERN FEDERAL LANDS HIGHWAY DIVISION

BLUE RIDGE PARKWAY

BRIDGE OVER I-26

SEGMENT 1-7D REINFORCEMENT

NO.	DATE	BY	REVISIONS	NO.	DATE	BY	REVISIONS	DESIGNED BY	DRAWN BY	CHECKED BY	SCALE	PROJECT TEAM LEADER	BRIDGE PLAN SHEET	DATE	BRP NO.
								CC/CWN	BK/CC	HC	½" = 1'-0"	George Choubah	77 of 228	December 2018	BRP-1265

ACTUAL FILE:R77_BLRI_I26_SEGMENT 1-7D REINF.DGN
M:\PROJECTS_STATE_DOT\NC\blri_I26_nepa\Bridge\Microstation\Bridge Design Files\0_OPROJECTS.dgn
14-Dec-2018 12:18 PM

STATE	PROJECT	SHEET NUMBER
NC	BLRI OVER I-26	R78

REINFORCING STEEL SCHEDULE — DIMENSION TABLE

SEGMENT 1-7D BAR LIST

BAR MK	SIZE	TYPE	PIN SZ	LOCATION	QTY	LENGTH	WEIGHT	A	B	C	D	E	F	G	H	J	K	O	R	V or N
*5SE1	5	STR		Longitudinal	144	9'-8"	1452		9'-8"											
*5SE2	5	STR		Trans. top	11	36'-2"	415		36'-2"											
*5SE3	5	STR		Trans. top	11	6'-0"	69		6'-0"											
*5SE4	5	52	0'-3¾"	Trans. top	22	16'-10"	386	9'-1"	7'-9"	7'-4½"	2'-5"									
*5SE5	5	247	0'-3¾"	Trans. top	22	4'-7"	105	2'-10¼"	0'-10"	0'-10"	0'-6¾"	0'-7¾"	0'-5½"	0'-8¾"						
*5SE6	5	STR		Trans. top	22	3'-3"	75		3'-3"											
*7SE7	7	73	0'-5 5/16"	Vert. i.f.	40	8'-6½"	698	7'-4¼"	1'-2"	0'-3"	1'-2½"									
*7SE8	7	52	0'-5 5/16"	Vert. o.f.	40	8'-7"	702	7'-5"	1'-2"	0'-3½"	1'-1¾"									
*7SE9	7	52	0'-5 5/16"	Vert. e.f.	80	7'-4½"	1206	6'-2¼"	1'-2"	0'-3½"	1'-1¾"									
*5SE10	5	52	0'-3¾"	Trans. bot.	80	9'-11½"	831	9'-1¼"	0'-10"	0'-2½"	0'-9¾"									
*6SE11	6	65	0'-4½"	Rail	15	6'-1½"	138	1'-0"	1'-4"	1'-4¼"	1'-5¼"	1'-0"	1'-5"							77°
*6SE12	6	65	0'-4½"	Rail	15	6'-10"	154	1'-0"	1'-8½"	1'-6"	1'-7¼"	1'-0"	1'-7¼"							84°
*5SE13	5	17	0'-3¾"	Rail	8	1'-8"	14		1'-3"	0'-5"										
*5SE14	5	17	0'-3¾"	Rail	10	5'-1½"	53		1'-10½"	1'-4¼"	1'-10½"									
*5SE15	5	17	0'-3¾"	Rail	10	6'-2"	64		1'-10¼"	2'-5½"	1'-10¼"									
*4SE16	4	17	0'-3⅛"	Trans. top	64	7'-5"	317		4'-0"	0'-5"	3'-0"									
*4SE17	4	S4	0'-3⅛"	Trans. bot.	16	3'-4½"	36	0'-8"	0'-8"	0'-8½"	0'-8"	0'-8"								
*4SE18	4	S4	0'-3⅛"	Trans. bot.	12	3'-6½"	28	0'-8"	0'-9"	0'-8½"	0'-9"	0'-8"								
				SUBTOTAL			6744 LBS													

ERECTION ANCHOR BLOCK BAR LIST

BAR MK	SIZE	TYPE	PIN SZ	LOCATION	QTY	LENGTH	WEIGHT	A	B	C	D	E	F	G	H	J	K	O	R	V or N
*6DE1	6	S4	0'-4½"	Trans. bot.	6	8'-2½"	74	1'-0"	1'-6¾"	3'-1"	1'-6¾"	1'-0"								
*6DE2	6	S4	0'-4½"	Long. bot.	6	6'-11"	62	1'-0"	1'-7"	1'-9"	1'-7"	1'-0"								
*6DE3	6	239	0'-4½"	Trans. top	12	7'-3"	131	1'-0"	2'-5¼"	1'-6¾"	1'-2¾"	1'-0"	76°	90°	14°					
*6DE4	6	S4	0'-4½"	Stirrups	2	8'-3½"	25	1'-0"	2'-4"	1'-7½"	2'-4"	1'-0"								
*6DE5	6	S4	0'-4½"	Stirrups	2	8'-6½"	26	1'-0"	2'-5½"	1'-7½"	2'-5½"	1'-0"								
*6DE6	6	S4	0'-4½"	Stirrups	2	8'-10"	27	1'-0"	2'-7¼"	1'-7½"	2'-7¼"	1'-0"								
*6DE7	6	S4	0'-4½"	Long. top	4	8'-11"	54	1'-0"	2'-7¾"	1'-7½"	2'-7¾"	1'-0"								
				SUBTOTAL			398 LBS													

BOTTOM SLAB BLISTER BAR LIST

BAR MK	SIZE	TYPE	PIN SZ	LOCATION	QTY	LENGTH	WEIGHT	A	B	C	D	E	F	G	H	J	K	O	R	V or N
*6LE1	6	17	0'-4½"	Long. bot.	6	10'-3½"	93		9'-8"	0'-7½"										
*5LE2	5	249	0'-3¾"	Long. bot.	8	11'-4½"	95	0'-10"	2'-1"	7'-7¼"	0'-10"	77°	90°	13°						
*5LE3	5	STR		Long. bot.	8	6'-10"	57		6'-10"											
*5LE4	5	STR		Long. bot.	8	4'-8"	39		4'-8"											
*6LE5	6	755	0'-4½"	Trans. bot.	2 sets of 15	6'-8" to 5'-7½" at 0'-1" Incr.	258	1'-0"	2'-6¼" to 2'-10¼" at 0'-0" Incr.	2'-1¾" to 0'-9¼" at 0'-1" Incr.	1'-0"	0'-11¾"								76°
*6LE6	6	1031	0'-4½"	Trans. bot.	6	8'-11½"	81	0'-3"	2'-11"	1'-4¾"	2'-7"	0'-3"	1'-0"	1'-0"	1'-0"	1'-0"				
*6LE7	6	101	0'-4½"	Trans. bot.	2 sets of 12	6'-6" to 4'-10" at 0'-2" Incr.	182	1'-0"	1'-7¼" to 0'-9¼" at 0'-1" Incr.	1'-3¾"	1'-7¼" to 0'-9¼" at 0'-1" Incr.	1'-0"								
				SUBTOTAL			847 LBS													

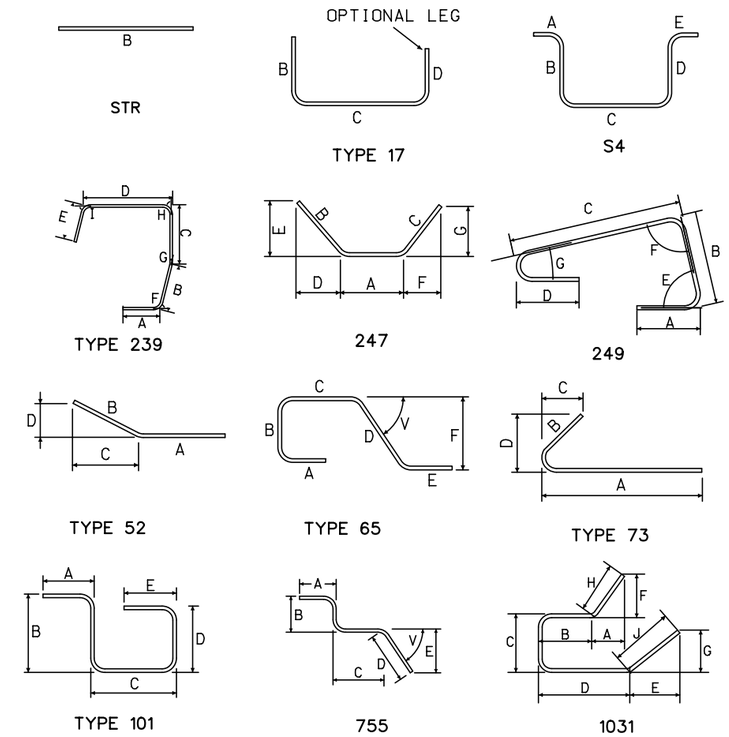

U.S. DEPARTMENT OF TRANSPORTATION
FEDERAL HIGHWAY ADMINISTRATION
EASTERN FEDERAL LANDS HIGHWAY DIVISION

BLUE RIDGE PARKWAY

BRIDGE OVER I-26

SEGMENT 1-7D BAR LIST

NO.	DATE	BY	REVISIONS	NO.	DATE	BY	REVISIONS

DESIGNED BY	DRAWN BY	CHECKED BY	SCALE	PROJECT TEAM LEADER	BRIDGE PLAN SHEET	DATE	BRP NO.
CC	CC	LE	No Scale	George Choubah	78 of 228	December 2018	BRP-1265

ACTUAL FILE:R78_BLRI_I26_SEGMENT 1-7D BAR LIST.DGN
M:\PROJECTS_STATE_DOT\NC\blri_I26_nepa\Bridge\Microstation\Bridge Design Files\0_OPROJECTS.dgn
14-Dec-2018 12:18 PM

STATE	PROJECT	SHEET NUMBER
NC	BLRI OVER I-26	R79

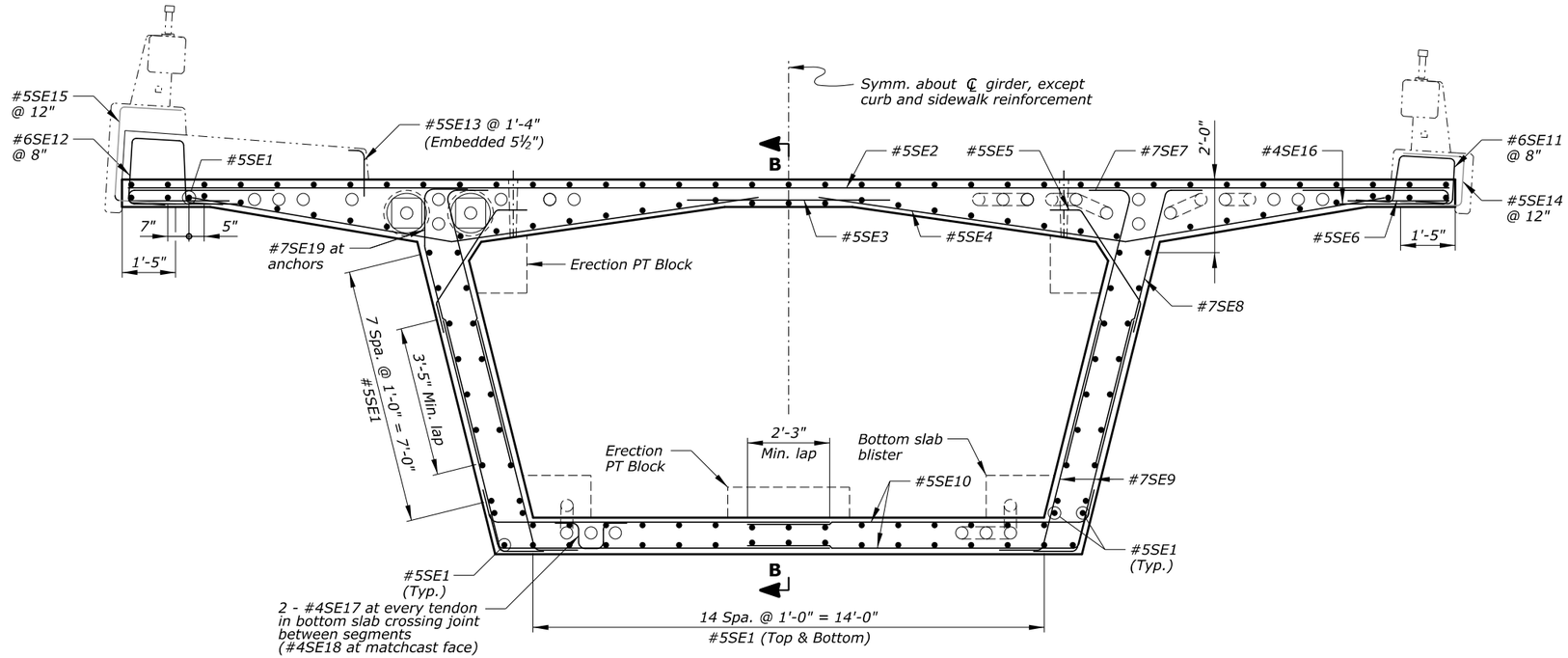

SECTION A-A
Looking upstation

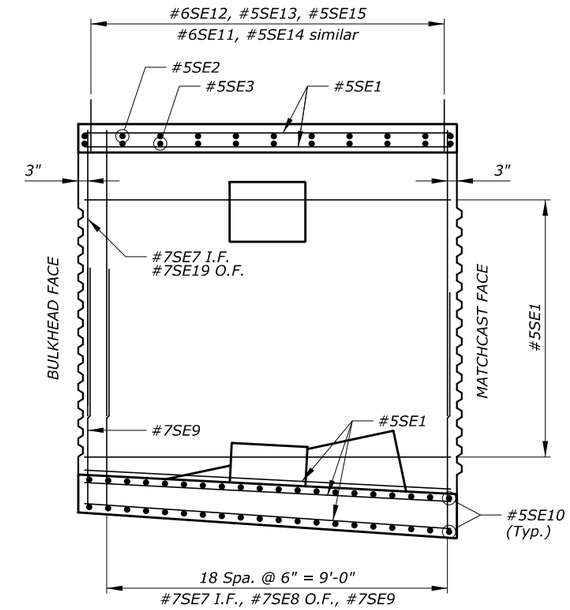

SECTION B-B

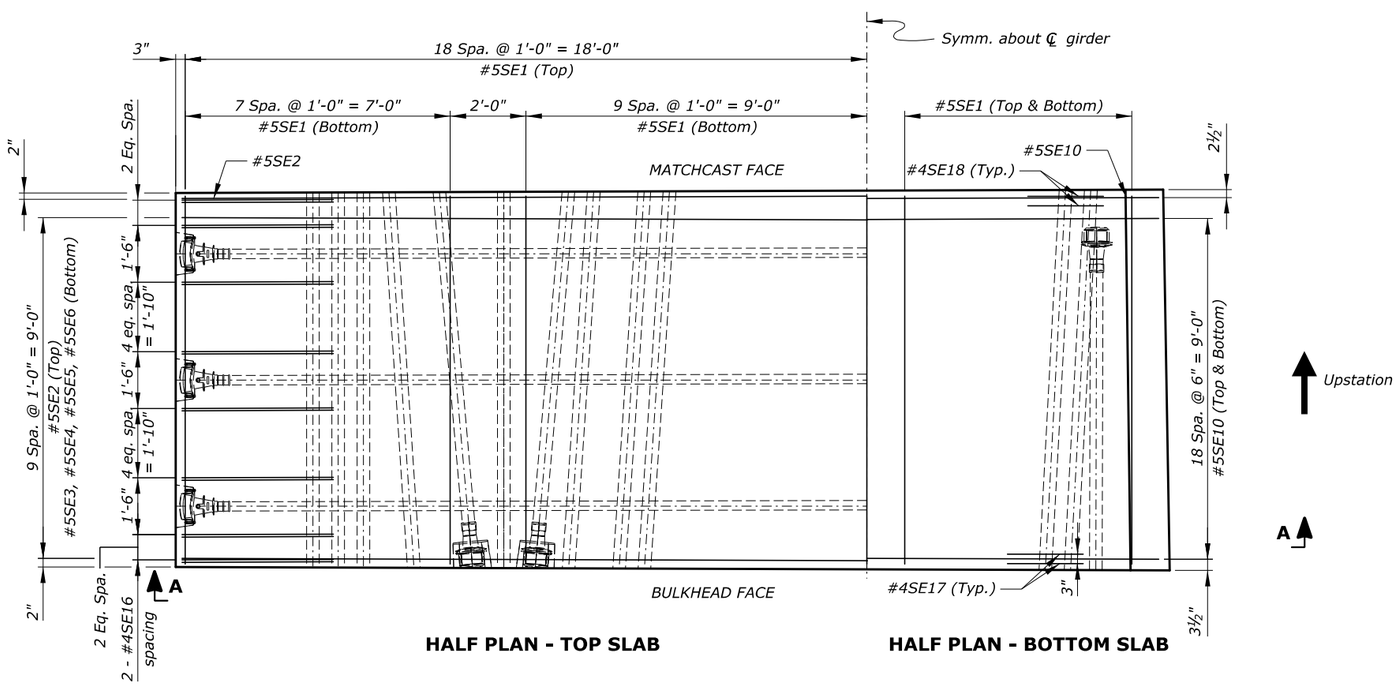

HALF PLAN - TOP SLAB

HALF PLAN - BOTTOM SLAB

Notes:

1. *Minimum concrete cover is 2½" at top face of deck, and 1½" at all other faces, unless otherwise noted.*
2. *Adjust slightly the location of reinforcement to avoid conflict with post-tensioning ducts.*
3. *For information on reinforcement in erection post-tensioning anchor blocks, see "ERECTION ANCHOR BLOCK" sheet.*
4. *For information on reinforcement in the bottom slab blister, see "BOTTOM SLAB BLISTER" sheet.*

Key:

e.f. = each face
I.F. = inside face
O.F. = outside face

U.S. DEPARTMENT OF TRANSPORTATION
FEDERAL HIGHWAY ADMINISTRATION
EASTERN FEDERAL LANDS HIGHWAY DIVISION

BLUE RIDGE PARKWAY

BRIDGE OVER I-26

SEGMENT 1-6D REINFORCEMENT

NO.	DATE	BY	REVISIONS	NO.	DATE	BY	REVISIONS	DESIGNED BY	DRAWN BY	CHECKED BY	SCALE	PROJECT TEAM LEADER	BRIDGE PLAN SHEET	DATE	BRP NO.
								CC/CWN	BK/CC	HC	½" = 1'-0"	George Choubah	79 of 228	December 2018	BRP-1265

ACTUAL FILE:R79_BLRI_I26_SEGMENT 1-6D REINF.DGN
M:\PROJECTS_STATE_DOT\NC\blri_I26_repo\Bridge\Microstation\Bridge Design Files\0_OPROJECTS.dgn
14-Dec-2018 12:18 PM

STATE	PROJECT	SHEET NUMBER
NC	BLRI OVER I-26	R80

REINFORCING STEEL SCHEDULE — DIMENSION TABLE

SEGMENT 1-6D BAR LIST

BAR MK	SIZE	TYPE	PIN SZ	LOCATION	QTY	LENGTH	WEIGHT	A	B	C	D	E	F	G	H	J	K	O	R	V or N
*5SE1	5	STR		Longitudinal	142	9′-8″	1432		9′-8″											
*5SE2	5	STR		Trans. top	11	36′-2″	415		36′-2″											
*5SE3	5	STR		Trans. top	11	6′-0″	69		6′-0″											
*5SE4	5	52	0′-3¾″	Trans. top	22	16′-10″	386	9′-1″	7′-9″	7′-4½″	2′-5″									
*5SE5	5	247	0′-3¾″	Trans. top	22	4′-7″	105	2′-10¼″	0′-10″	0′-10″	0′-6¾″	0′-7¾″	0′-5½″	0′-8¾″						
*5SE6	5	STR		Trans. top	22	3′-3″	75		3′-3″											
*7SE7	7	73	0′-5 5/16″	Vert. i.f.	40	8′-10½″	726	7′-8½″	1′-2″	0′-3″	1′-2½″									
*7SE8	7	52	0′-5 5/16″	Vert. o.f.	38	8′-11½″	696	7′-9¼″	1′-2″	0′-3½″	1′-1¾″									
*7SE9	7	52	0′-5 5/16″	Vert. e.f.	80	7′-8½″	1260	6′-6½″	1′-2″	0′-3½″	1′-1¾″									
*5SE10	5	52	0′-3¾″	Trans. bot.	80	9′-10″	820	8′-11¾″	0′-10″	0′-2½″	0′-9¾″									
*6SE11	6	65	0′-4½″	Rail	15	6′-1½″	138	1′-0″	1′-4″	1′-4¼″	1′-5¼″	1′-0″	1′-5″							77°
*6SE12	6	65	0′-4½″	Rail	15	6′-10″	154	1′-0″	1′-8½″	1′-6″	1′-7¼″	1′-0″	1′-7¼″							84°
*5SE13	5	17	0′-3¾″	Rail	8	1′-8″	14		1′-3″	0′-5″										
*5SE14	5	17	0′-3¾″	Rail	10	5′-1½″	53		1′-10½″	1′-4¼″	1′-10½″									
*5SE15	5	17	0′-3¾″	Rail	10	6′-2″	64		1′-10¼″	2′-5½″	1′-10¼″									
*4SE16	4	17	0′-3⅛″	Trans. top	64	7′-5″	317		4′-0″	0′-5″	3′-0″									
*4SE17	4	S4	0′-3⅛″	Trans. bot.	12	3′-6½″	28	0′-8″	0′-9″	0′-8½″	0′-9″	0′-8″								
*4SE18	4	S4	0′-3⅛″	Trans. bot.	8	3′-10½″	21	0′-8″	0′-11″	0′-8½″	0′-11″	0′-8″								
*7SE19	7	55	0′-5 5/16″	Vert. o.f.	2	8′-10½″	36		1′-2″	2′-0″	5′-7″	1′-5½″								
				SUBTOTAL			6810 LBS													

ERECTION ANCHOR BLOCK BAR LIST

BAR MK	SIZE	TYPE	PIN SZ	LOCATION	QTY	LENGTH	WEIGHT	A	B	C	D	E	F	G	H	J	K	O	R	V or N
*6DE1	6	S4	0′-4½″	Trans. bot.	6	8′-2½″	74	1′-0″	1′-6¾″	3′-1″	1′-6¾″	1′-0″								
*6DE2	6	S4	0′-4½″	Long. bot.	6	6′-11″	62	1′-0″	1′-7″	1′-9″	1′-7″	1′-0″								
*6DE3	6	239	0′-4½″	Trans. top	12	7′-3″	131	1′-0″	2′-5¼″	1′-6¾″	1′-2¾″	1′-0″	76°	90°	14°					
*6DE4	6	S4	0′-4½″	Stirrups	2	8′-3½″	25	1′-0″	2′-4″	1′-7½″	2′-4″	1′-0″								
*6DE5	6	S4	0′-4½″	Stirrups	2	8′-6½″	26	1′-0″	2′-5½″	1′-7½″	2′-5½″	1′-0″								
*6DE6	6	S4	0′-4½″	Stirrups	2	8′-10″	27	1′-0″	2′-7¼″	1′-7½″	2′-7¼″	1′-0″								
*6DE7	6	S4	0′-4½″	Long. top	4	8′-11″	54	1′-0″	2′-7¾″	1′-7½″	2′-7¾″	1′-0″								
				SUBTOTAL			398 LBS													

BOTTOM SLAB BLISTER BAR LIST

BAR MK	SIZE	TYPE	PIN SZ	LOCATION	QTY	LENGTH	WEIGHT	A	B	C	D	E	F	G	H	J	K	O	R	V or N
*6LE1	6	17	0′-4½″	Long. bot.	6	10′-4½″	93		9′-8″	0′-8½″										
*5LE2	5	249	0′-3¾″	Long. bot.	8	11′-10″	99	0′-10″	2′-2″	7′-11¾″	0′-10″	77°	90°	13°						
*5LE3	5	STR		Long. bot.	8	7′-2½″	60		7′-2½″											
*5LE4	5	STR		Long. bot.	8	5′-0½″	42		5′-0½″											
*6LE5	6	755	0′-4½″	Trans. bot.	2 sets of 15	6′-9″ to 5′-8½″ at 0′-1″ Incr.	262	1′-0″	2′-6¼″ to 2′-10¼″ at 0′-0″ Incr.	2′-2¾″ to 0′-10¼″ at 0′-1″ Incr.	1′-0″	0′-11¾″								76°
*6LE6	6	1031	0′-4½″	Trans. bot.	6	8′-11½″	81	0′-3″	2′-11″	1′-4¾″	2′-7″	0′-3″	1′-0″	1′-0″	1′-0″	1′-0″				
*6LE7	6	101	0′-4½″	Trans. bot.	2 sets of 12	6′-8″ to 5′-0½″ at 0′-2″ Incr.	188	1′-0″	1′-8¼″ to 0′-10¼″ at 0′-1″ Incr.	1′-3¾″	1′-8¼″ to 0′-10¼″ at 0′-1″ Incr.	1′-0″								
				SUBTOTAL			868 LBS													

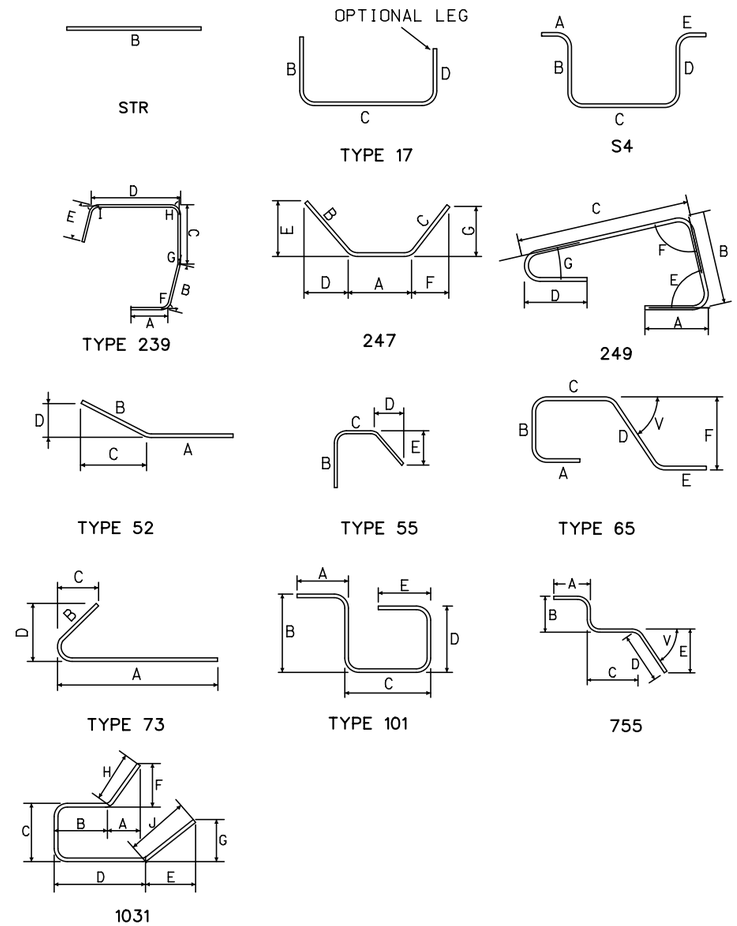

U.S. DEPARTMENT OF TRANSPORTATION
FEDERAL HIGHWAY ADMINISTRATION
EASTERN FEDERAL LANDS HIGHWAY DIVISION

BLUE RIDGE PARKWAY

BRIDGE OVER I-26

SEGMENT 1-6D BAR LIST

NO.	DATE	BY	REVISIONS	NO.	DATE	BY	REVISIONS

DESIGNED BY	DRAWN BY	CHECKED BY	SCALE	PROJECT TEAM LEADER	BRIDGE PLAN SHEET	DATE	BRP NO.
CC	CC	LE	No Scale	George Choubah	80 of 228	December 2018	BRP-1265

ACTUAL FILE:R80_BLRI_I26_SEGMENT 1-6D BAR LIST.DGN
M:\PROJECTS_STATE_DOT\NC\blri_I26_nepa\Bridge\Microstation\Bridge Design Files\0_PROJECTS.dgn
14-Dec-2018 12:18 PM

STATE	PROJECT	SHEET NUMBER
NC	BLRI OVER I-26	R81

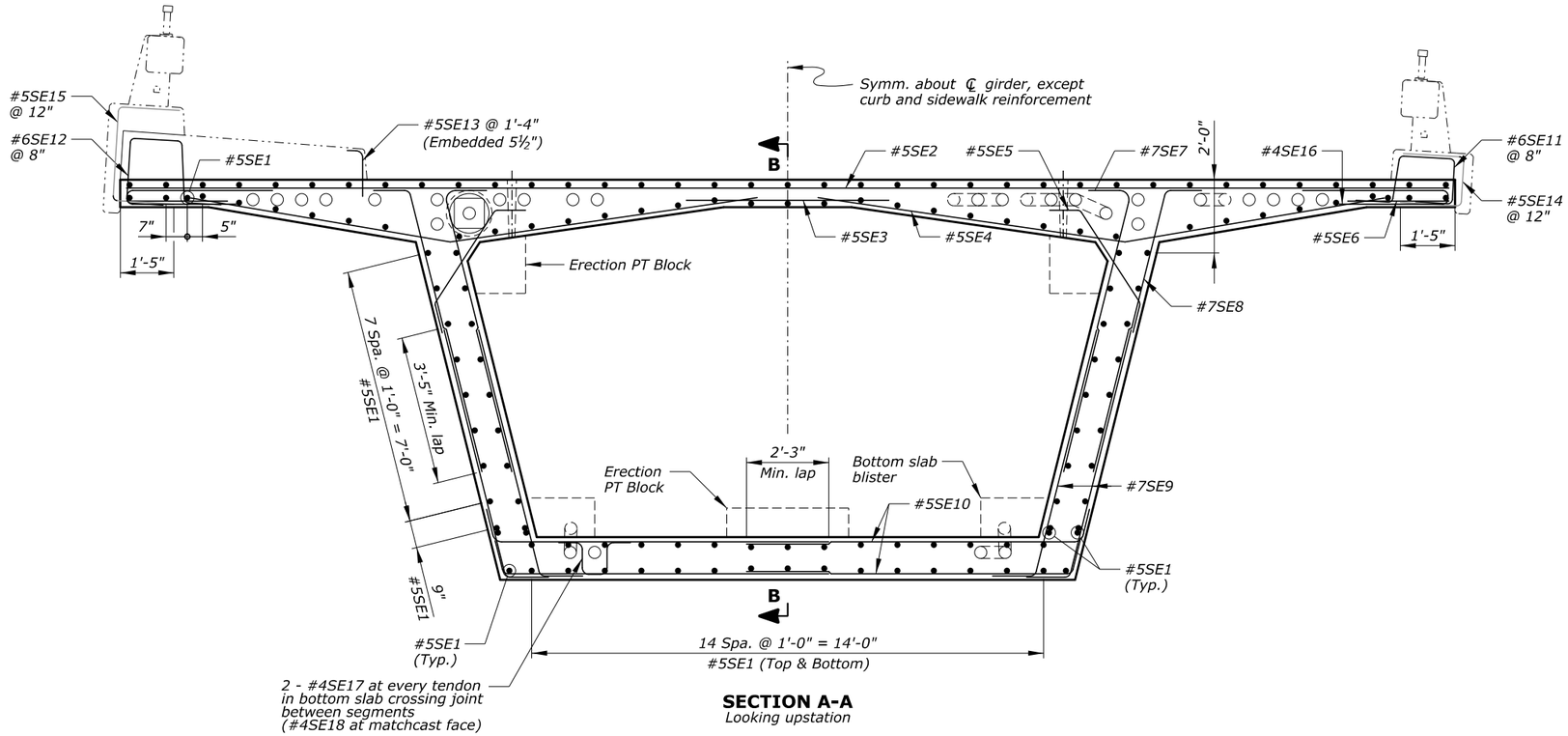

SECTION A-A
Looking upstation

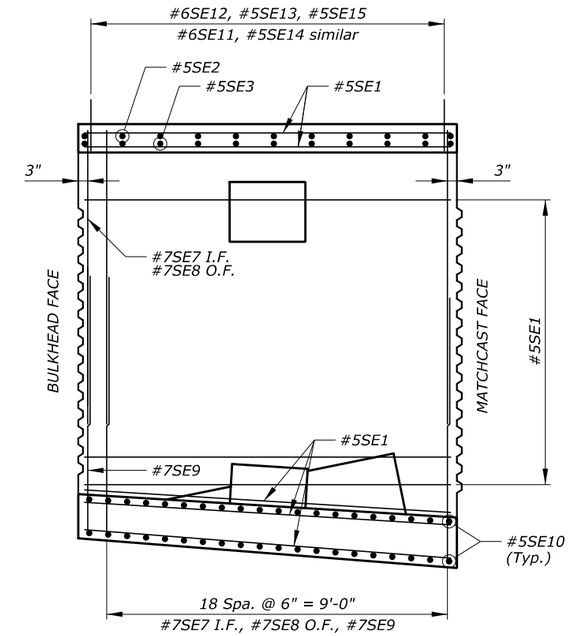

SECTION B-B

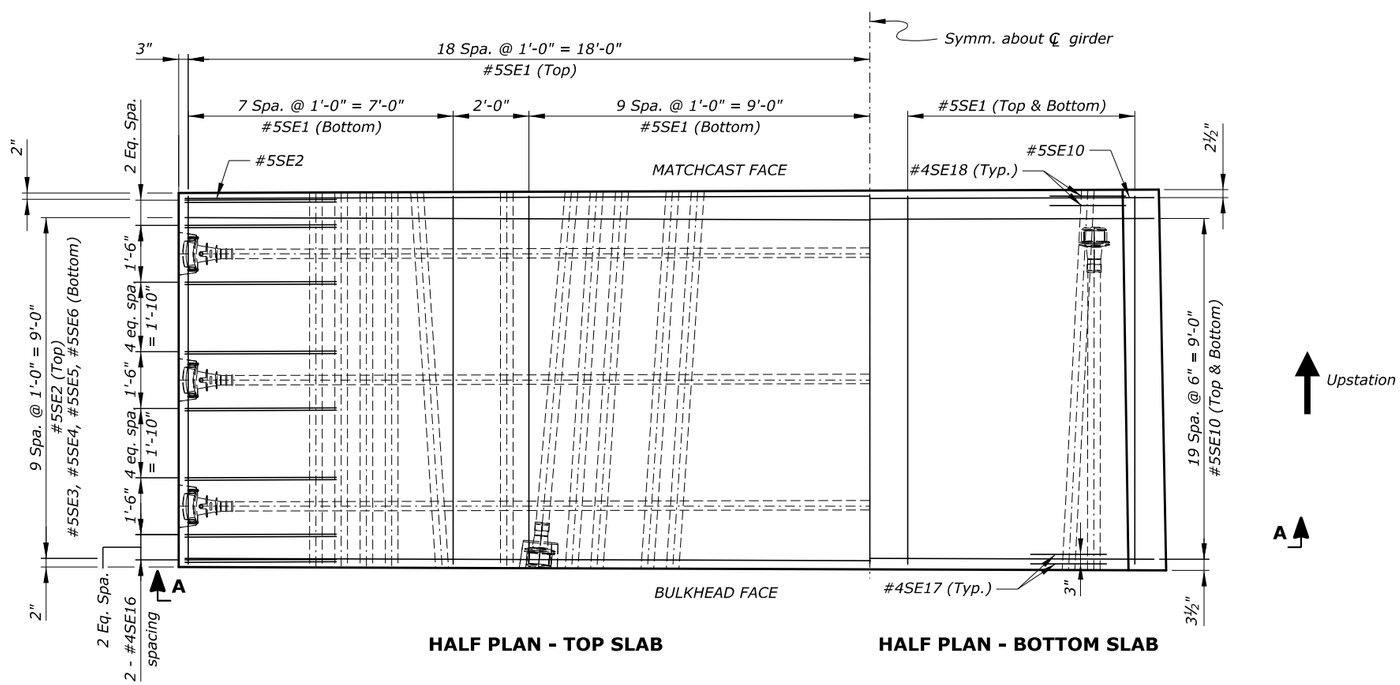

HALF PLAN - TOP SLAB

HALF PLAN - BOTTOM SLAB

Notes:

1. *Minimum concrete cover is 2½" at top face of deck, and 1½" at all other faces, unless otherwise noted.*
2. *Adjust slightly the location of reinforcement to avoid conflict with post-tensioning ducts.*
3. *For information on reinforcement in erection post-tensioning anchor blocks, see "ERECTION ANCHOR BLOCK" sheet.*
4. *For information on reinforcement in the bottom slab blister, see "BOTTOM SLAB BLISTER" sheet.*

Key:

e.f. = each face
I.F. = inside face
O.F. = outside face

U.S. DEPARTMENT OF TRANSPORTATION
FEDERAL HIGHWAY ADMINISTRATION
EASTERN FEDERAL LANDS HIGHWAY DIVISION

BLUE RIDGE PARKWAY

BRIDGE OVER I-26

SEGMENT 1-5D REINFORCEMENT

NO.	DATE	BY	REVISIONS	NO.	DATE	BY	REVISIONS	DESIGNED BY	DRAWN BY	CHECKED BY	SCALE	PROJECT TEAM LEADER	BRIDGE PLAN SHEET	DATE	BRP NO.
								CC/CWN	BK/CC	HC	½" = 1'-0"	George Choubah	81 of 228	December 2018	BRP-1265

ACTUAL FILE:R81_BLRI_I26_SEGMENT 1-5D REINF.DGN
M:\PROJECTS_STATE_DOT\NC\blri_I26_repo\Bridge\Microstation\Bridge Design Files\0_OPROJECTS.dgn
14-Dec-2018 12:18 PM

STATE	PROJECT	SHEET NUMBER
NC	BLRI OVER I-26	R82

REINFORCING STEEL SCHEDULE — DIMENSION TABLE

SEGMENT 1-5D BAR LIST

BAR MK	SIZE	TYPE	PIN SZ	LOCATION	QTY	LENGTH	WEIGHT	A	B	C	D	E	F	G	H	J	K	O	R	V or N
*5SE1	5	STR		Longitudinal	146	9′-8″	1472		9′-8″											
*5SE2	5	STR		Trans. top	11	36′-2″	415		36′-2″											
*5SE3	5	STR		Trans. top	11	6′-0″	69		6′-0″											
*5SE4	5	52	0′-3¾″	Trans. top	22	16′-10″	386	9′-1″	7′-9″	7′-4½″	2′-5″									
*5SE5	5	247	0′-3¾″	Trans. top	22	4′-7″	105	2′-10¼″	0′-10″	0′-10″	0′-6¾″	0′-7¾″	0′-5½″	0′-8¾″						
*5SE6	5	STR		Trans. top	22	3′-3″	75		3′-3″											
*7SE7	7	73	0′-5 5/16″	Vert. i.f.	40	9′-0½″	739	7′-10¼″	1′-2″	0′-3″	1′-2½″									
*7SE8	7	52	0′-5 5/16″	Vert. o.f.	40	9′-1″	743	7′-11″	1′-2″	0′-3½″	1′-1¾″									
*7SE9	7	52	0′-5 5/16″	Vert. e.f.	80	8′-4″	1363	7′-2¼″	1′-2″	0′-3½″	1′-1¾″									
*5SE10	5	52	0′-3¾″	Trans. bot.	80	9′-8½″	810	8′-10¼″	0′-10″	0′-2½″	0′-9¾″									
*6SE11	6	65	0′-4½″	Rail	15	6′-1½″	138	1′-0″	1′-4″	1′-4¼″	1′-5¼″	1′-0″	1′-5″							77°
*6SE12	6	65	0′-4½″	Rail	15	6′-10″	154	1′-0″	1′-8½″	1′-6″	1′-7¼″	1′-0″	1′-7¼″							84°
*5SE13	5	17	0′-3¾″	Rail	8	1′-8″	14		1′-3″	0′-5″										
*5SE14	5	17	0′-3¾″	Rail	10	5′-1½″	53		1′-10½″	1′-4¼″	1′-10½″									
*5SE15	5	17	0′-3¾″	Rail	10	6′-2″	64		1′-10¼″	2′-5½″	1′-10¼″									
*4SE16	4	17	0′-3⅛″	Trans. top	64	7′-5″	317		4′-0″	0′-5″	3′-0″									
*4SE17	4	S4	0′-3⅛″	Trans. bot.	8	3′-10½″	21	0′-8″	0′-11″	0′-8½″	0′-11″	0′-8″								
*4SE18	4	S4	0′-3⅛″	Trans. bot.	4	4′-2½″	11	0′-8″	1′-1″	0′-8½″	1′-1″	0′-8″								
				SUBTOTAL			6949 LBS													

ERECTION ANCHOR BLOCK BAR LIST

BAR MK	SIZE	TYPE	PIN SZ	LOCATION	QTY	LENGTH	WEIGHT	A	B	C	D	E	F	G	H	J	K	O	R	V or N
*6DE1	6	S4	0′-4½″	Trans. bot.	6	8′-2½″	74	1′-0″	1′-6¾″	3′-1″	1′-6¾″	1′-0″								
*6DE2	6	S4	0′-4½″	Long. bot.	6	6′-11″	62	1′-0″	1′-7″	1′-9″	1′-7″	1′-0″								
*6DE3	6	239	0′-4½″	Trans. top	12	7′-3″	131	1′-0″	2′-5¼″	1′-6¾″	1′-2¾″	1′-0″	76°	90°	14°					
*6DE4	6	S4	0′-4½″	Stirrups	2	8′-3½″	25	1′-0″	2′-4″	1′-7½″	2′-4″	1′-0″								
*6DE5	6	S4	0′-4½″	Stirrups	2	8′-6½″	26	1′-0″	2′-5½″	1′-7½″	2′-5½″	1′-0″								
*6DE6	6	S4	0′-4½″	Stirrups	2	8′-10″	27	1′-0″	2′-7¼″	1′-7½″	2′-7¼″	1′-0″								
*6DE7	6	S4	0′-4½″	Long. top	4	8′-11″	54	1′-0″	2′-7¾″	1′-7½″	2′-7¾″	1′-0″								
				SUBTOTAL			398 LBS													

BOTTOM SLAB BLISTER BAR LIST

BAR MK	SIZE	TYPE	PIN SZ	LOCATION	QTY	LENGTH	WEIGHT	A	B	C	D	E	F	G	H	J	K	O	R	V or N
*6LE1	6	17	0′-4½″	Long. bot.	6	10′-6½″	95		9′-8″	0′-10½″										
*5LE2	5	250	0′-3¾″	Long. bot.	8	12′-9½″	107	0′-10″	2′-4″	8′-4″	0′-5½″	0′-10″	77°	90°	103°					
*5LE3	5	STR		Long. bot.	8	7′-11½″	66		7′-11½″											
*5LE4	5	STR		Long. bot.	8	5′-9½″	48		5′-9½″											
*6LE5	6	755	0′-4½″	Trans. bot.	2 sets of 15	6′-9″ to 5′-8½″ at 0′-1″ Incr.	262	1′-0″	2′-6¼″ to 2′-10¼″ at 0′-0″ Incr.	2′-2¾″ to 0′-10¼″ at 0′-1″ Incr.	1′-0″	0′-11¾″								76°
*6LE6	6	1031	0′-4½″	Trans. bot.	6	8′-11½″	81	0′-3″	2′-11″	1′-4¾″	2′-7″	0′-3″	1′-0″	1′-0″	1′-0″	1′-0″				
*6LE7	6	101	0′-4½″	Trans. bot.	2 sets of 12	6′-8″ to 5′-0½″ at 0′-2″ Incr.	188	1′-0″	1′-8¼″ to 0′-10¼″ at 0′-1″ Incr.	1′-3¾″	1′-8¼″ to 0′-10¼″ at 0′-1″ Incr.	1′-0″								
				SUBTOTAL			890 LBS													

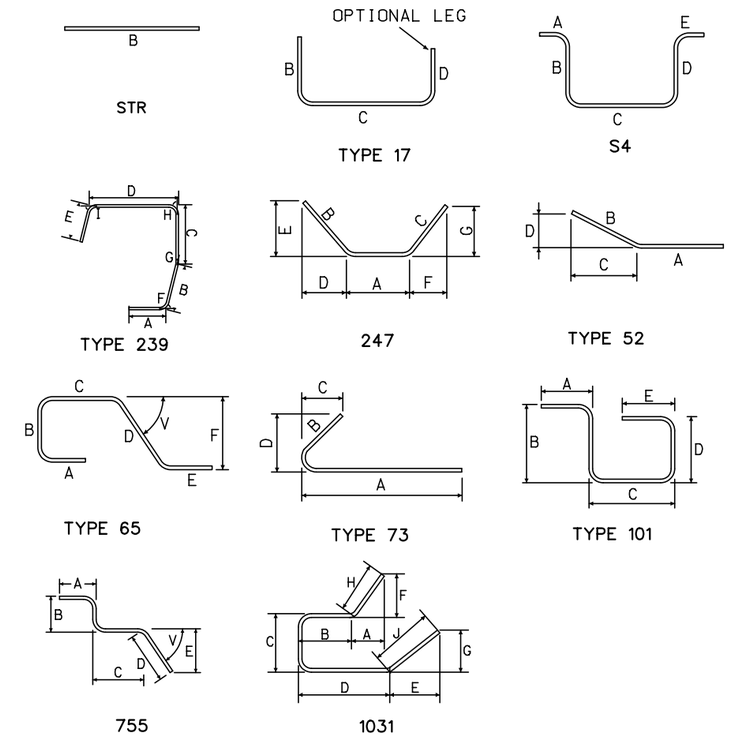

U.S. DEPARTMENT OF TRANSPORTATION
FEDERAL HIGHWAY ADMINISTRATION
EASTERN FEDERAL LANDS HIGHWAY DIVISION

BLUE RIDGE PARKWAY

BRIDGE OVER I-26

SEGMENT 1-5D BAR LIST

NO.	DATE	BY	REVISIONS	NO.	DATE	BY	REVISIONS	DESIGNED BY	DRAWN BY	CHECKED BY	SCALE	PROJECT TEAM LEADER	BRIDGE PLAN SHEET	DATE	BRP NO.
								CC	CC	LE	No Scale	George Choubah	82 of 228	December 2018	BRP-1265

ACTUAL FILE:R82_BLRI_I26_SEGMENT 1-5D BAR LIST.DGN
M:\PROJECTS_STATE_DOT\NC\blri_I26_nepa\Bridge\Microstation\Bridge Design Files\0_OPROJECTS.dgn
14-Dec-2018 12:18 PM

STATE	PROJECT	SHEET NUMBER
NC	BLRI OVER I-26	R83

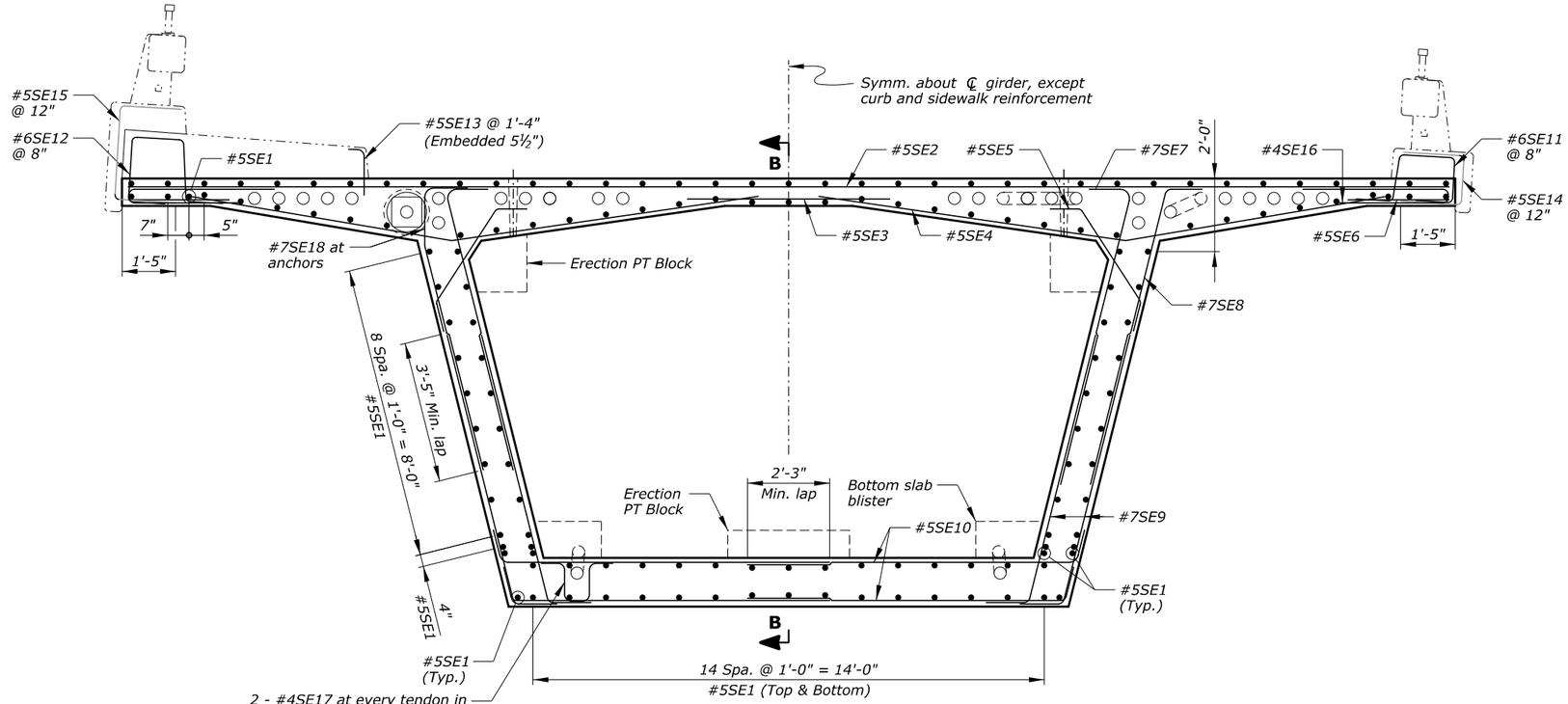

SECTION A-A
Looking upstation

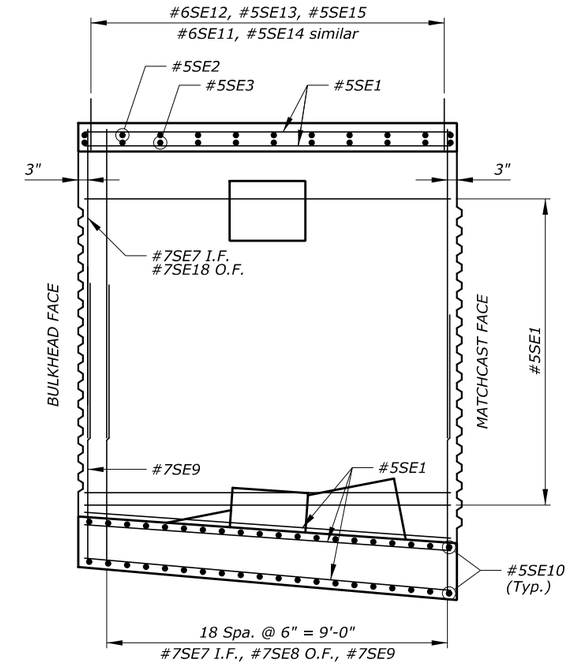

SECTION B-B

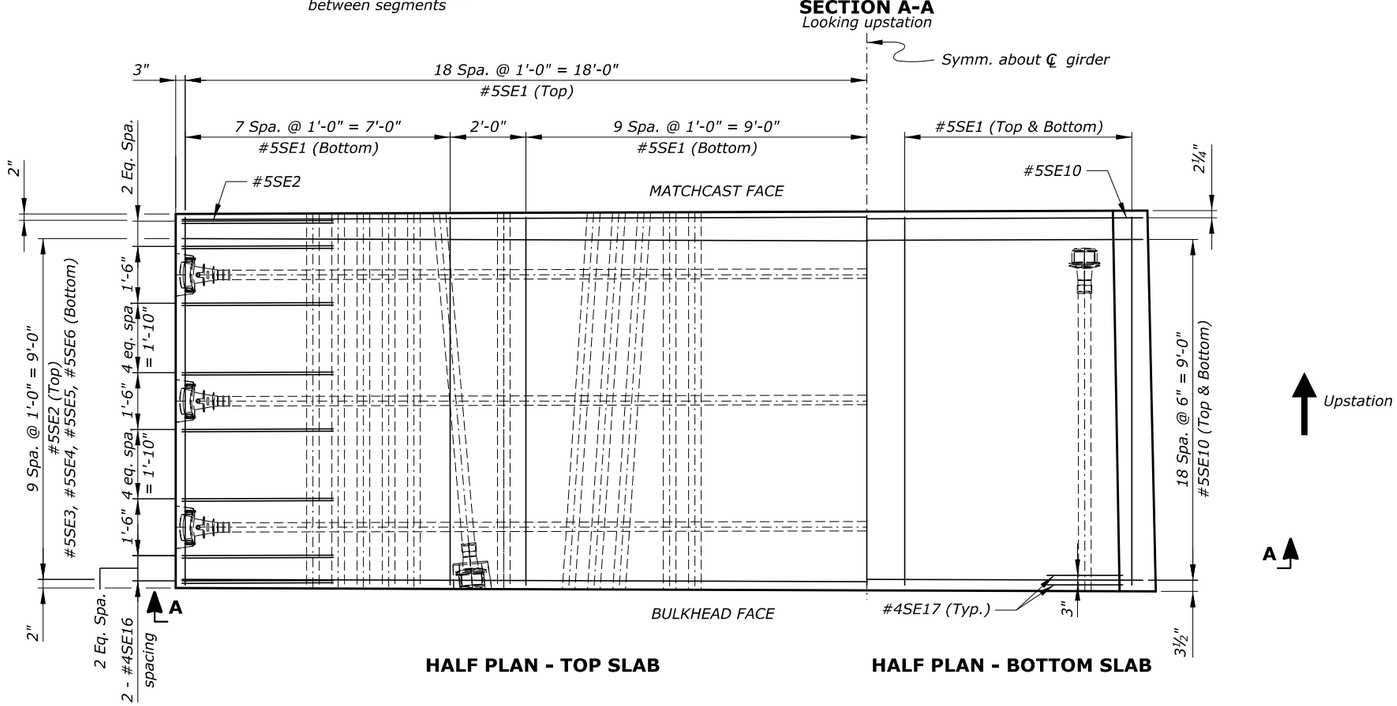

HALF PLAN - TOP SLAB

HALF PLAN - BOTTOM SLAB

Notes:

1. *Minimum concrete cover is 2½" at top face of deck, and 1½" at all other faces, unless otherwise noted.*
2. *Adjust slightly the location of reinforcement to avoid conflict with post-tensioning ducts.*
3. *For information on reinforcement in erection post-tensioning anchor blocks, see "ERECTION ANCHOR BLOCK" sheet.*
4. *For information on reinforcement in the bottom slab blister, see "BOTTOM SLAB BLISTER" sheet.*

Key:

e.f. = each face
I.F. = inside face
O.F. = outside face

U.S. DEPARTMENT OF TRANSPORTATION
FEDERAL HIGHWAY ADMINISTRATION
EASTERN FEDERAL LANDS HIGHWAY DIVISION

BLUE RIDGE PARKWAY

BRIDGE OVER I-26

SEGMENT 1-4D REINFORCEMENT

NO.	DATE	BY	REVISIONS	NO.	DATE	BY	REVISIONS	DESIGNED BY	DRAWN BY	CHECKED BY	SCALE	PROJECT TEAM LEADER	BRIDGE PLAN SHEET	DATE	BRP NO.
								CC/CWN	BK/CC	HC	½" = 1'-0"	George Choubah	83 of 228	December 2018	BRP-1265

ACTUAL FILE:R83_BLRI_I26_SEGMENT 1-4D REINF.DGN
M:\PROJECTS_STATE_DOT\NC\blri_I26_nepo\Bridge\Microstation\Bridge Design Files\0_OPROJECTS.dgn
14-Dec-2018 12:18 PM

STATE	PROJECT	SHEET NUMBER
NC	BLRI OVER I-26	R84

REINFORCING STEEL SCHEDULE — DIMENSION TABLE

SEGMENT 1-4D BAR LIST

BAR MK	SIZE	TYPE	PIN SZ	LOCATION	QTY	LENGTH	WEIGHT	A	B	C	D	E	F	G	H	J	K	O	R	V or N
*5SE1	5	STR		Longitudinal	150	9'-8"	1512		9'-8"											
*5SE2	5	STR		Trans. top	11	36'-2"	415		36'-2"											
*5SE3	5	STR		Trans. top	11	6'-0"	69		6'-0"											
*5SE4	5	52	0'-3¾"	Trans. top	22	16'-10"	386	9'-1"	7'-9"	7'-4½"	2'-5"									
*5SE5	5	247	0'-3¾"	Trans. top	22	4'-7"	105	2'-10¼"	0'-10"	0'-10"	0'-6¾"	0'-7¾"	0'-5½"	0'-8¾"						
*5SE6	5	STR		Trans. top	22	3'-3"	75		3'-3"											
*7SE7	7	73	0'-5 5/16"	Vert. i.f.	40	9'-6"	777	8'-4"	1'-2"	0'-3"	1'-2½"									
*7SE8	7	52	0'-5 5/16"	Vert. o.f.	38	9'-6½"	741	8'-4¾"	1'-2"	0'-3½"	1'-1¾"									
*7SE9	7	52	0'-5 5/16"	Vert. e.f.	80	8'-9½"	1438	7'-7½"	1'-2"	0'-3½"	1'-1¾"									
*5SE10	5	52	0'-3¾"	Trans. bot.	80	9'-6½"	796	8'-8½"	0'-10"	0'-2½"	0'-9¾"									
*6SE11	6	65	0'-4½"	Rail	15	6'-1½"	138	1'-0"	1'-4"	1'-4¼"	1'-5¼"	1'-0"	1'-5"							77°
*6SE12	6	65	0'-4½"	Rail	15	6'-10"	154	1'-0"	1'-8½"	1'-6"	1'-7¼"	1'-0"	1'-7¼"							84°
*5SE13	5	17	0'-3¾"	Rail	8	1'-8"	14		1'-3"	0'-5"										
*5SE14	5	17	0'-3¾"	Rail	10	5'-1½"	53		1'-10½"	1'-4¼"	1'-10½"									
*5SE15	5	17	0'-3¾"	Rail	10	6'-2"	64		1'-10¼"	2'-5½"	1'-10¼"									
*4SE16	4	17	0'-3⅛"	Trans. top	64	7'-5"	317		4'-0"	0'-5"	3'-0"									
*4SE17	4	S4	0'-3⅛"	Trans. bot.	4	4'-2½"	11	0'-8"	1'-1"	0'-8½"	1'-1"	0'-8"								
*7SE18	7	55	0'-5 5/16"	Vert. o.f.	2	9'-6"	39		1'-2"	2'-0"	6'-2¼"	1'-7¼"								
				SUBTOTAL			7105 LBS													

ERECTION ANCHOR BLOCK BAR LIST

BAR MK	SIZE	TYPE	PIN SZ	LOCATION	QTY	LENGTH	WEIGHT	A	B	C	D	E	F	G	H	J	K	O	R	V or N
*6DE1	6	S4	0'-4½"	Trans. bot.	6	8'-2½"	74	1'-0"	1'-6¾"	3'-1"	1'-6¾"	1'-0"								
*6DE2	6	S4	0'-4½"	Long. bot.	6	6'-11"	62	1'-0"	1'-7"	1'-9"	1'-7"	1'-0"								
*6DE3	6	239	0'-4½"	Trans. top	12	7'-3"	131	1'-0"	2'-5¼"	1'-6¾"	1'-2¾"	1'-0"	76°	90°	14°					
*6DE4	6	S4	0'-4½"	Stirrups	2	8'-3½"	25	1'-0"	2'-4"	1'-7½"	2'-4"	1'-0"								
*6DE5	6	S4	0'-4½"	Stirrups	2	8'-6½"	26	1'-0"	2'-5½"	1'-7½"	2'-5½"	1'-0"								
*6DE6	6	S4	0'-4½"	Stirrups	2	8'-10"	27	1'-0"	2'-7¼"	1'-7½"	2'-7¼"	1'-0"								
*6DE7	6	S4	0'-4½"	Long. top	4	8'-11"	54	1'-0"	2'-7¾"	1'-7½"	2'-7¾"	1'-0"								
				SUBTOTAL			398 LBS													

BOTTOM SLAB BLISTER BAR LIST

BAR MK	SIZE	TYPE	PIN SZ	LOCATION	QTY	LENGTH	WEIGHT	A	B	C	D	E	F	G	H	J	K	O	R	V or N
*6LE1	6	17	0'-4½"	Long. bot.	6	10'-8½"	97		9'-8"	1'-0½"										
*5LE2	5	250	0'-3¾"	Long. bot.	8	13'-1½"	110	0'-10"	2'-6¼"	8'-4"	0'-7½"	0'-10"	77°	90°	103°					
*5LE3	5	STR		Long. bot.	8	8'-4½"	70		8'-4½"											
*5LE4	5	STR		Long. bot.	8	6'-6½"	55		6'-6½"											
*6LE5	6	755	0'-4½"	Trans. bot.	2 sets of 15	6'-11" to 5'-10½" at 0'-1" Incr.	269	1'-0"	2'-6¼" to 2'-10¼" at 0'-0" Incr.	2'-4¾" to 1'-0¼" at 0'-1" Incr.	1'-0"	0'-11¾"								76°
*6LE6	6	1031	0'-4½"	Trans. bot.	6	8'-11½"	81	0'-3"	2'-11"	1'-4¾"	2'-7"	0'-3"	1'-0"	1'-0"	1'-0"	1'-0"				
*6LE7	6	101	0'-4½"	Trans. bot.	2 sets of 12	7'-0½" to 5'-4½" at 0'-2" Incr.	200	1'-0"	1'-10¼" to 1'-0¼" at 0'-1" Incr.	1'-3¾"	1'-10¼" to 1'-0¼" at 0'-1" Incr.	1'-0"								
				SUBTOTAL			923 LBS													

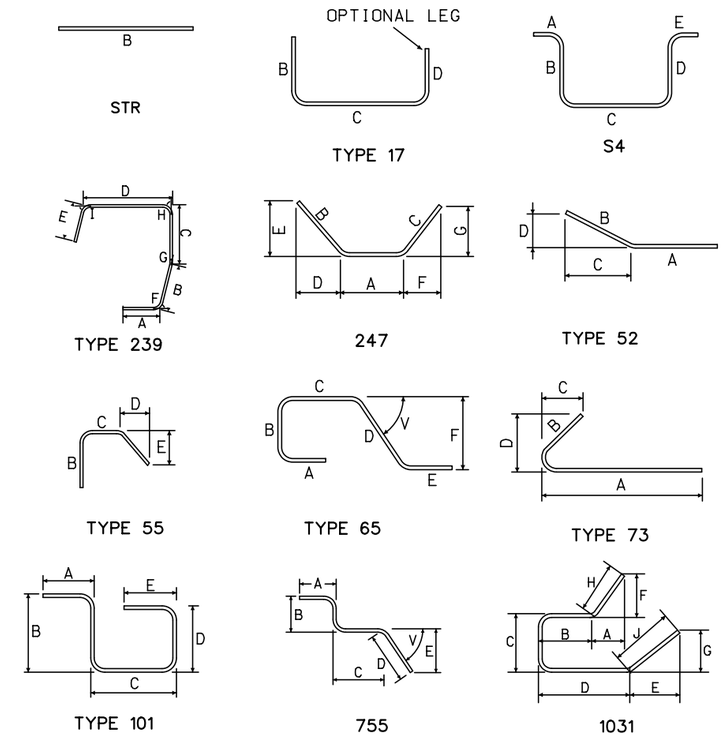

U.S. DEPARTMENT OF TRANSPORTATION
FEDERAL HIGHWAY ADMINISTRATION
EASTERN FEDERAL LANDS HIGHWAY DIVISION

BLUE RIDGE PARKWAY

BRIDGE OVER I-26

SEGMENT 1-4D BAR LIST

NO.	DATE	BY	REVISIONS	NO.	DATE	BY	REVISIONS	DESIGNED BY	DRAWN BY	CHECKED BY	SCALE	PROJECT TEAM LEADER	BRIDGE PLAN SHEET	DATE	BRP NO.
								CC	CC	LE	No Scale	George Choubah	84 of 228	December 2018	BRP-1265

ACTUAL FILE:R84_BLRI_I26_SEGMENT 1-4D BAR LIST.DGN
M:\PROJECTS_STATE_DOT\NC\blri_I26_nepa\Bridge\Microstation\Bridge Design Files\0_OPROJECTS.dgn
14-Dec-2018 12:18 PM

STATE	PROJECT	SHEET NUMBER
NC	BLRI OVER I-26	R85

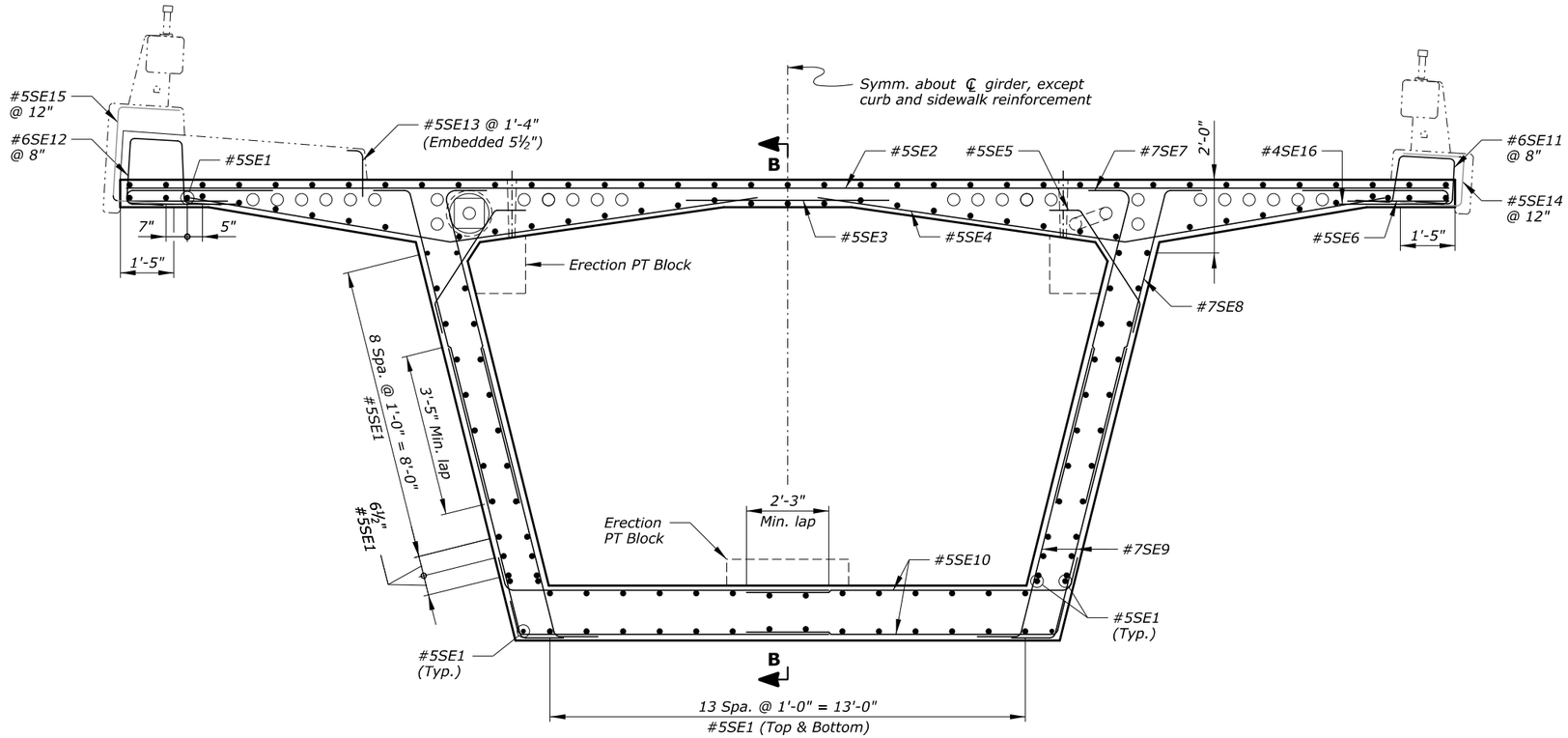

SECTION A-A
Looking upstation

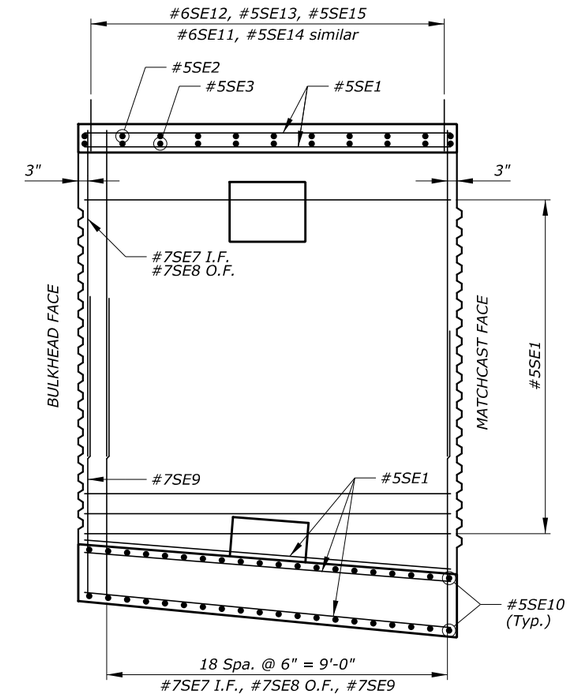

SECTION B-B

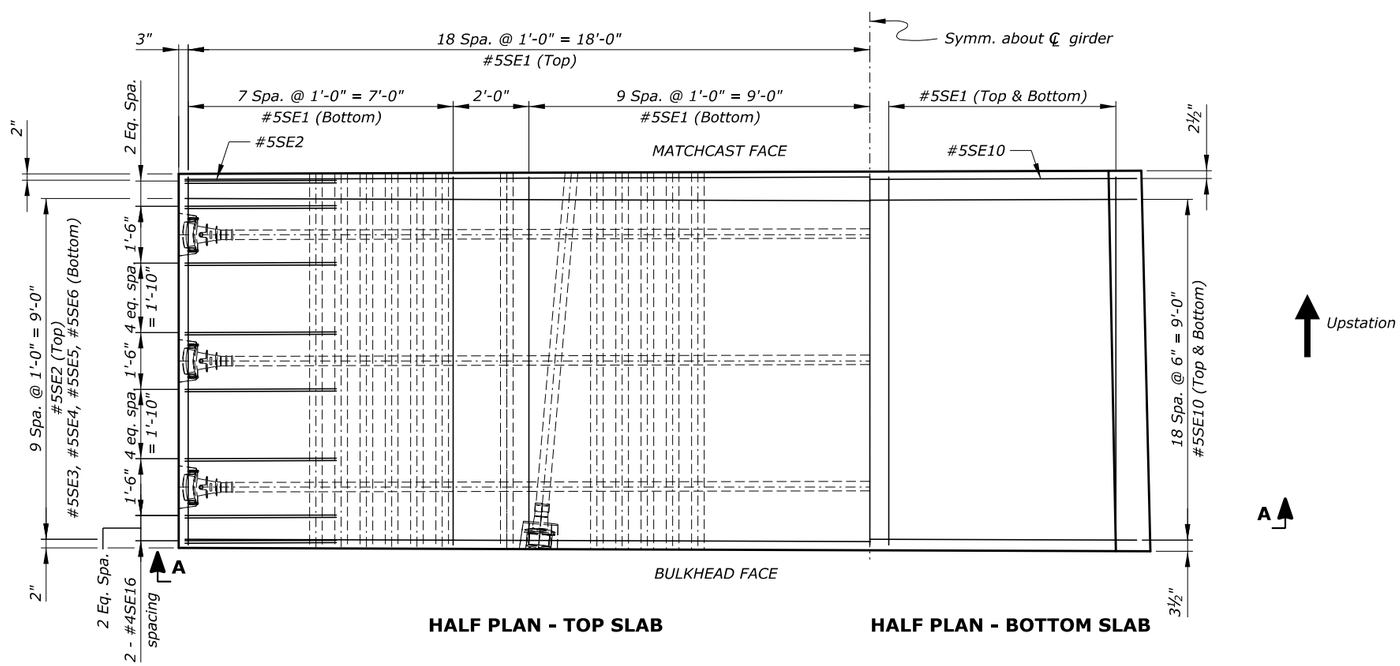

HALF PLAN - TOP SLAB **HALF PLAN - BOTTOM SLAB**

Notes:

1. *Minimum concrete cover is 2½" at top face of deck, and 1½" at all other faces, unless otherwise noted.*
2. *Adjust slightly the location of reinforcement to avoid conflict with post-tensioning ducts.*
3. *For information on reinforcement in erection post-tensioning anchor blocks, see "ERECTION ANCHOR BLOCK" sheet.*

Key:

e.f. = each face
I.F. = inside face
O.F. = outside face

U.S. DEPARTMENT OF TRANSPORTATION
FEDERAL HIGHWAY ADMINISTRATION
EASTERN FEDERAL LANDS HIGHWAY DIVISION

BLUE RIDGE PARKWAY

BRIDGE OVER I-26

SEGMENT 1-3D REINFORCEMENT

NO.	DATE	BY	REVISIONS	NO.	DATE	BY	REVISIONS	DESIGNED BY	DRAWN BY	CHECKED BY	SCALE	PROJECT TEAM LEADER	BRIDGE PLAN SHEET	DATE	BRP NO.
								CC/CWN	BK/CC	HC	½" = 1'-0"	George Choubah	85 of 228	December 2018	BRP-1265

ACTUAL FILE:R85_BLRI_I26_SEGMENT 1-3D REINF.DGN
M:\PROJECTS_STATE_DOT\WC\blri_I26_repo\Bridge\Microstation\Bridge Design Files\0_OPROJECTS.dgn
14-Dec-2018 12:19 PM

STATE	PROJECT	SHEET NUMBER
NC	BLRI OVER I-26	R86

REINFORCING STEEL SCHEDULE — DIMENSION TABLE

SEGMENT 1-3D BAR LIST

BAR MK	SIZE	TYPE	PIN SZ	LOCATION	QTY	LENGTH	WEIGHT	A	B	C	D	E	F	G	H	J	K	O	R	V or N
*5SE1	5	STR		Longitudinal	152	9'-8"	1533		9'-8"											
*5SE2	5	STR		Trans. top	11	36'-2"	415		36'-2"											
*5SE3	5	STR		Trans. top	11	6'-0"	69		6'-0"											
*5SE4	5	52	0'-3¾"	Trans. top	22	16'-10"	386	9'-1"	7'-9"	7'-4½"	2'-5"									
*5SE5	5	247	0'-3¾"	Trans. top	22	4'-7"	105	2'-10¼"	0'-10"	0'-10"	0'-6¾"	0'-7¾"	0'-5½"	0'-8¾"						
*5SE6	5	STR		Trans. top	22	3'-3"	75		3'-3"											
*7SE7	7	73	0'-5 5/16"	Vert. i.f.	40	9'-11"	811	8'-9"	1'-2"	0'-3"	1'-2½"									
*7SE8	7	52	0'-5 5/16"	Vert. o.f.	40	10'-0"	818	8'-9¾"	1'-2"	0'-3½"	1'-1¾"									
*7SE9	7	52	0'-5 5/16"	Vert. e.f.	80	9'-4½"	1533	8'-2¼"	1'-2"	0'-3½"	1'-1¾"									
*5SE10	5	52	0'-3¾"	Trans. bot.	80	9'-4½"	782	8'-6¼"	0'-10"	0'-2½"	0'-9¾"									
*6SE11	6	65	0'-4½"	Rail	15	6'-11½"	138	1'-0"	1'-4"	1'-4¼"	1'-5¼"	1'-0"	1'-5"							77°
*6SE12	6	65	0'-4½"	Rail	15	6'-10"	154	1'-0"	1'-8½"	1'-6"	1'-7¼"	1'-0"	1'-7¼"							84°
*5SE13	5	17	0'-3¾"	Rail	8	1'-8"	14		1'-3"	0'-5"										
*5SE14	5	17	0'-3¾"	Rail	10	5'-11½"	53		1'-10½"	1'-4¼"	1'-10½"									
*5SE15	5	17	0'-3¾"	Rail	10	6'-2"	64		1'-10¼"	2'-5½"	1'-10¼"									
*4SE16	4	17	0'-3⅛"	Trans. top	64	7'-5"	317		4'-0"	0'-5"	3'-0"									
				SUBTOTAL			7267 LBS													

ERECTION ANCHOR BLOCK BAR LIST

BAR MK	SIZE	TYPE	PIN SZ	LOCATION	QTY	LENGTH	WEIGHT	A	B	C	D	E	F	G	H	J	K	O	R	V or N
*6DE1	6	S4	0'-4½"	Trans. bot.	6	8'-2½"	74	1'-0"	1'-6¾"	3'-1"	1'-6¾"	1'-0"								
*6DE2	6	S4	0'-4½"	Long. bot.	6	6'-11"	62	1'-0"	1'-7"	1'-9"	1'-7"	1'-0"								
*6DE3	6	239	0'-4½"	Trans. top	12	7'-3"	131	1'-0"	2'-5¼"	1'-6¾"	1'-2¾"	1'-0"	76°	90°	14°					
*6DE4	6	S4	0'-4½"	Stirrups	2	8'-3½"	25	1'-0"	2'-4"	1'-7½"	2'-4"	1'-0"								
*6DE5	6	S4	0'-4½"	Stirrups	2	8'-6½"	26	1'-0"	2'-5½"	1'-7½"	2'-5½"	1'-0"								
*6DE6	6	S4	0'-4½"	Stirrups	2	8'-10"	27	1'-0"	2'-7¼"	1'-7½"	2'-7¼"	1'-0"								
*6DE7	6	S4	0'-4½"	Long. top	4	8'-11"	54	1'-0"	2'-7¾"	1'-7½"	2'-7¾"	1'-0"								
				SUBTOTAL			398 LBS													

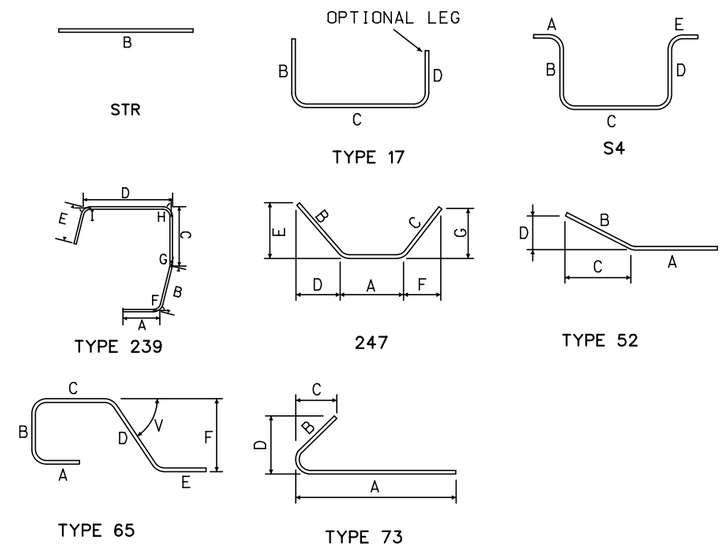

U.S. DEPARTMENT OF TRANSPORTATION
FEDERAL HIGHWAY ADMINISTRATION
EASTERN FEDERAL LANDS HIGHWAY DIVISION

BLUE RIDGE PARKWAY

BRIDGE OVER I-26

SEGMENT 1-3D BAR LIST

NO.	DATE	BY	REVISIONS	NO.	DATE	BY	REVISIONS	DESIGNED BY	DRAWN BY	CHECKED BY	SCALE	PROJECT TEAM LEADER	BRIDGE PLAN SHEET	DATE	BRP NO.
								CC	CC	LE	No Scale	George Choubah	86 of 228	December 2018	BRP-1265

ACTUAL FILE:R86_BLRI_I26_SEGMENT 1-3D BAR LIST.DGN
M:\PROJECTS_STATE_DOT\NC\blri_I26_nepa\Bridge\Microstation\Bridge Design Files\0_OPROJECTS.dgn
14-Dec-2018 12:19 PM