EDI MODEL 2018ECLip-NC CONFLICT MONITOR PROGRAMMING DETAIL

(remove jumpers and set switches as shown)

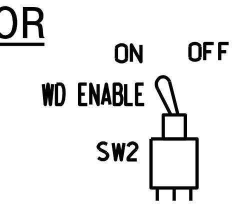

REMOVE DIODE JUMPERS 2-5, 2-6, 2-11, 5-11 and 6-11.

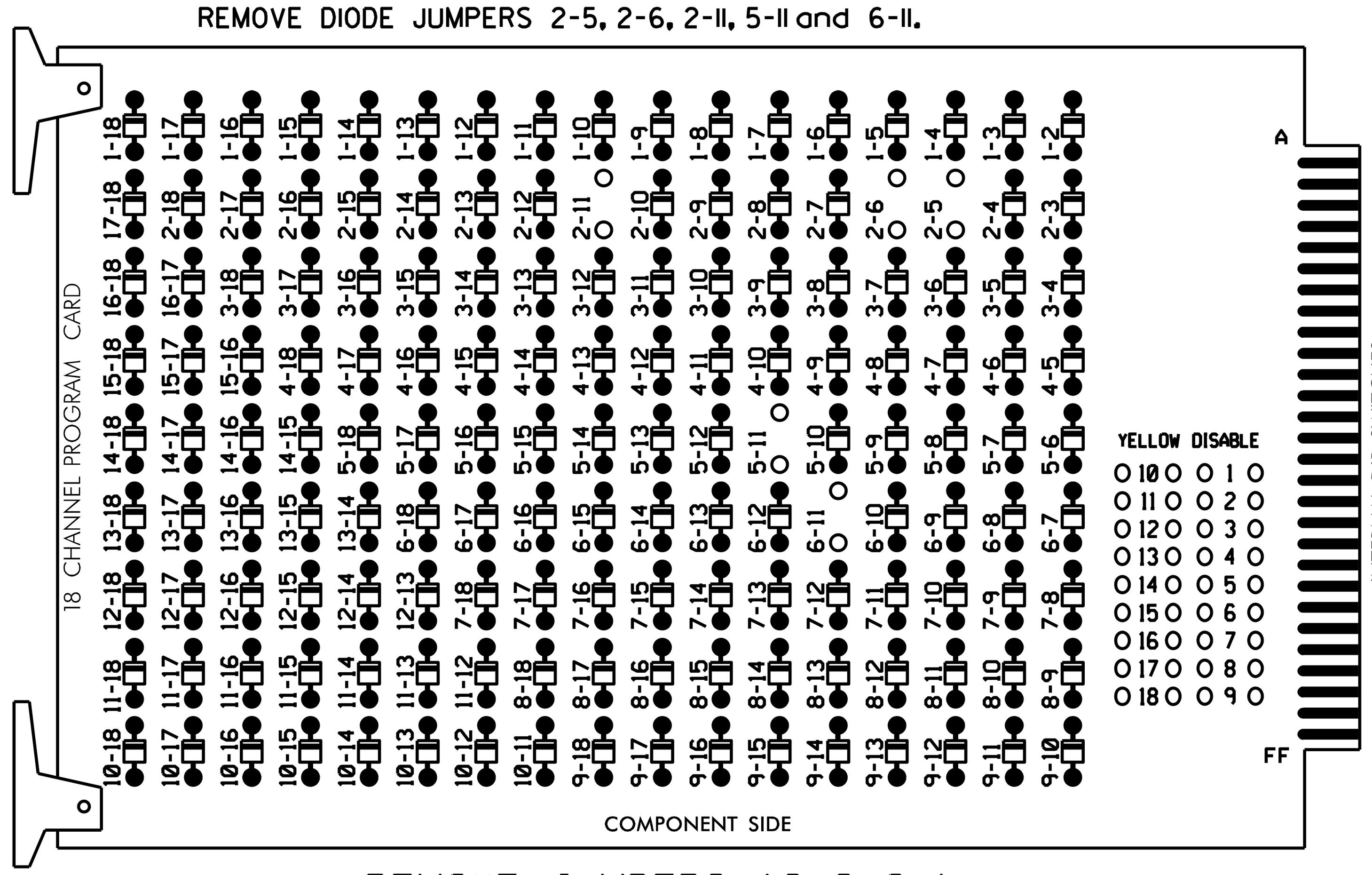

REMOVE JUMPERS AS SHOWN

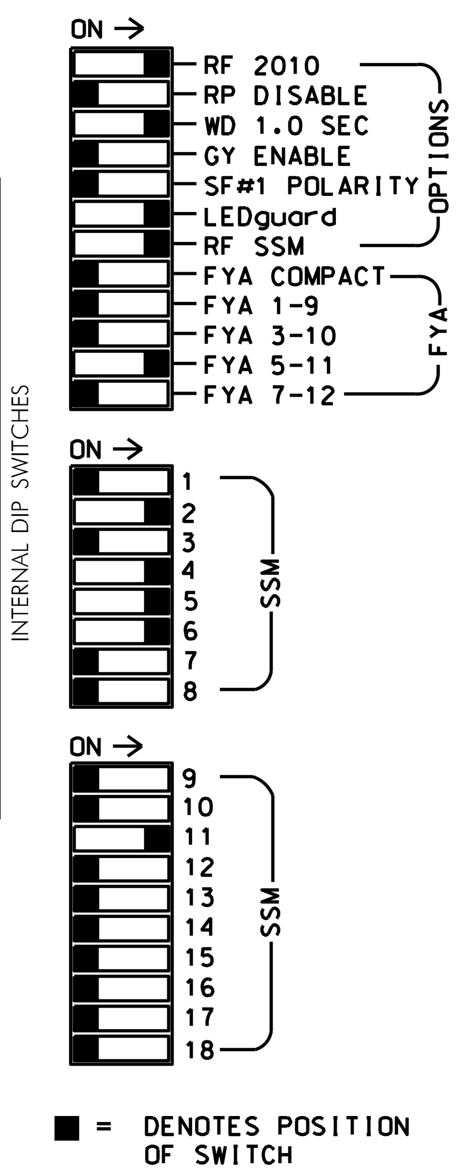

NOTES:

1. Card is provided with all diode jumpers in place. Removal of any jumper allows its channels to run concurrently.
2. Ensure jumpers SEL2-SEL5 and SEL9 are present on the monitor board.
3. Ensure that Red Enable is active at all times during normal operation.
4. Integrate monitor with Ethernet network in cabinet.

NOTES

1. To prevent "flash-conflict" problems, insert red flash program blocks for all unused vehicle load switches in the output file. The installer shall verify that signal heads flash in accordance with the Signal Plans.
2. Program controller to start up in phase 2 Green and 6 Green.
3. The cabinet and controller are part of the Belmont Signal System.

EQUIPMENT INFORMATION

CONTROLLER..............2070LX
CABINET.................332 W/ AUX
SOFTWARE................ECONOLITE ASC/3-2070
CABINET MOUNT...........BASE
OUTPUT FILE POSITIONS...18 WITH AUX. OUTPUT FILE
LOAD SWITCHES USED......S2,S5,S7,S8,AUX S4
PHASES USED.............2,4,5,6
OVERLAP "A".............NOT USED
OVERLAP "B".............NOT USED
OVERLAP "C".............*
OVERLAP "D".............NOT USED

* See overlap programming detail on sheet 2

SIGNAL HEAD HOOK-UP CHART

LOAD SWITCH NO.	S1	S2	S3	S4	S5	S6	S7		S8	S9	S10	S11	S12	AUX S1	AUX S2	AUX S3	AUX S4	AUX S5	AUX S6
CMU CHANNEL NO.	1	2	13	3	4	14	5		6	15	7	8	16	9	10	17	11	12	18
PHASE	1	2	2 PED	3	4	4 PED	5		6	6 PED	7	8	8 PED	OLA	OLB	SPARE	OLC	OLD	SPARE
SIGNAL HEAD NO.	NU	21,22	NU	NU	41,42	NU	42	51★	61,62	NU	NU	NU	NU	NU	NU	NU	51★	NU	NU
RED		128			101		*		134										
YELLOW		129			102				135										
GREEN		130			103				136										
RED ARROW																	A114		
YELLOW ARROW							132										A115		
FLASHING YELLOW ARROW																	A116		
GREEN ARROW							133	133											

NU = Not Used

* Denotes install load resistor. See load resistor installation detail this sheet.

★ See pictorial of head wiring in detail this sheet.

FYA SIGNAL WIRING DETAIL

(wire signal head as shown)

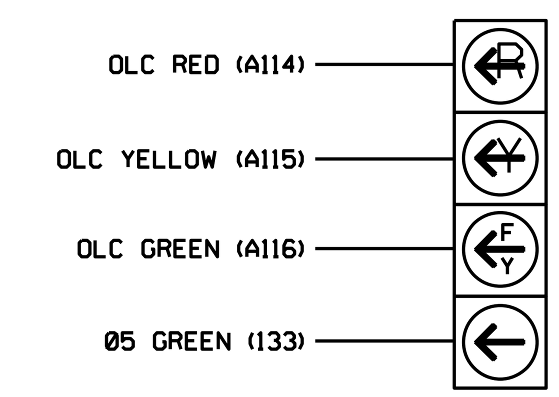

51

INPUT FILE POSITION LAYOUT

(front view)

FILE		1	2	3	4	5	6	7	8	9	10	11	12	13	14
FILE "I"	U	SLOT EMPTY	Ø 2 2A	SLOT EMPTY	WIRED INPUT ⊗	SLOT EMPTY	Ø 4 4A	SLOT EMPTY	SLOT EMPTY	SLOT EMPTY	SLOT EMPTY	SLOT EMPTY	SLOT EMPTY	SLOT EMPTY	FS DC ISOLATOR
	L		NOT USED				NOT USED								ST DC ISOLATOR
FILE "J"	U	Ø 5 5A	Ø 5 5B	Ø 6 6A	SLOT EMPTY	SLOT EMPTY	SLOT EMPTY	SLOT EMPTY	SLOT EMPTY	SLOT EMPTY	SLOT EMPTY	SLOT EMPTY	SLOT EMPTY	SLOT EMPTY	SLOT EMPTY
	L	NOT USED	NOT USED	NOT USED											

EX.: 1A, 2A, ETC. = LOOP NO.'S

FS = FLASH SENSE
ST = STOP TIME

⊗ Wired Input - Do not populate slot with detector card

INPUT FILE CONNECTION & PROGRAMMING CHART

LOOP NO.	LOOP TERMINAL	INPUT FILE POS.	PIN NO.	DETECTOR NO.	NEMA PHASE	CALL	EXTEND TIME	DELAY TIME	ADDED INITIAL	DETECTOR TYPE
2A	TB2-5,6	I2U	39	2	2	YES			X	N
4A	TB4-9,10	I6U	41	4	4	YES				S
5A [1]	TB3-1,2	J1U	55	5	5	YES		15		S
	-	I4U	47	22	2	YES		3		G
5B	TB3-5,6	J2U	40	6	5	YES		15		S
6A	TB3-9,10	J3U	64	36	6	YES			X	N

[1] Add jumper from J1-W to I4-W, on rear of input file.

INPUT FILE POSITION LEGEND: J2L

FILE J
SLOT 2
LOWER

LOAD RESISTOR INSTALLATION DETAIL

(install resistor as shown)

ACCEPTABLE VALUES

VALUE (ohms)	WATTAGE
1.5K - 1.9K	25W (min)
2.0K - 3.0K	10W (min)

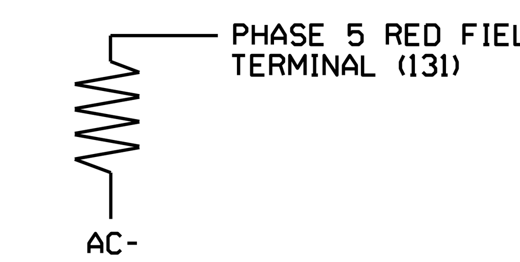

THIS ELECTRICAL DETAIL IS FOR
THE SIGNAL DESIGN: 12-1537
DESIGNED: December 2018
SEALED: February 7, 2019
REVISED: N/A

Electrical Detail - Sheet 1 of 2

DOCUMENT NOT CONSIDERED FINAL UNLESS ALL SIGNATURES COMPLETED

Prepared in the Office of:

SUMMIT DESIGN AND ENGINEERING SERVICES

NC FIRM LICENSE No: P-0339
504 Meadowlands Drive
Hillsborough, NC 27278
(919) 732-3883
(919) 732-6676 (FAX)

ELECTRICAL AND PROGRAMMING DETAILS FOR:

Prepared For: Transportation Mobility and Safety Division, ITS & Signals Management Section, State of North Carolina Department of Transportation

750 N.Greenfield Pkwy,Garner,NC 27529

NC 7 (McAdenville Road)
at
I-85 Northbound Ramps

Division 12 Gaston County Belmont

PLAN DATE: December 2018	REVIEWED BY:
PREPARED BY: J. Smith	REVIEWED BY: E. Sirgany

REVISIONS	INIT.	DATE

SEAL
NORTH CAROLINA PROFESSIONAL ENGINEER SEAL 018174 EDWARD W. SIRGANY

DocuSigned by: Edward W Sirgany 2/7/2019
39DF9C86A6684E9...
DATE

SIG. INVENTORY NO. 12-1537

$$$$$SYSTIME$$$$$ $$$$$$$$$$$$$$$DGN$$$$$$$$$$$$$$$ $$$$USERNAME$$$$