**This electronic collection of documents is provided for the convenience of the user and is Not a Certified Document –**

**The documents contained herein were originally issued and sealed by the individuals whose names and license numbers appear on each page, on the dates appearing with their signature on that page.**
**This file or an individual page shall not be considered a certified document.**

DocuSign Envelope ID: 609DC734-B6DC-4B94-B1D1-420DCB5CA916

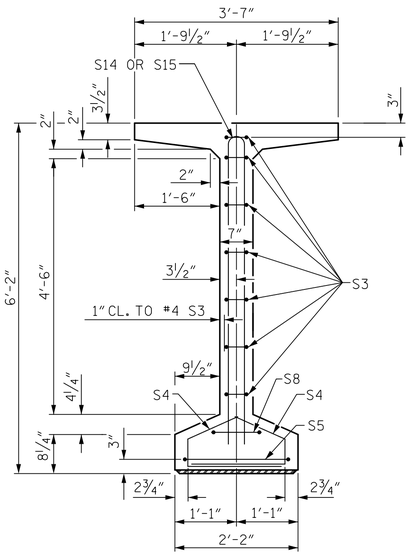


SECTION A-A

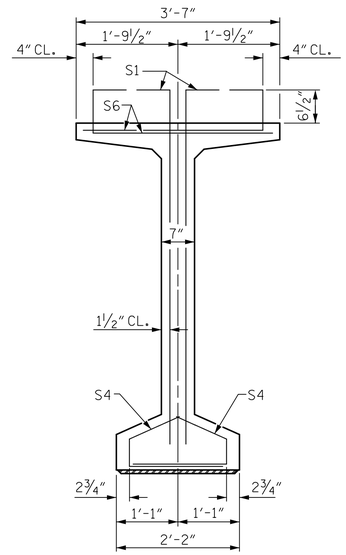


SECTION B-B

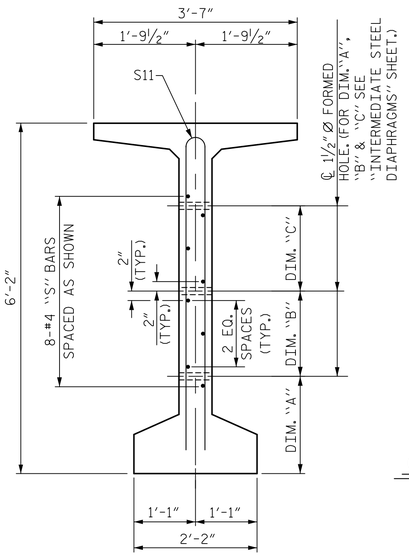


SECTION C-C

(S1, S6 AND S9 BARS NOT SHOWN)

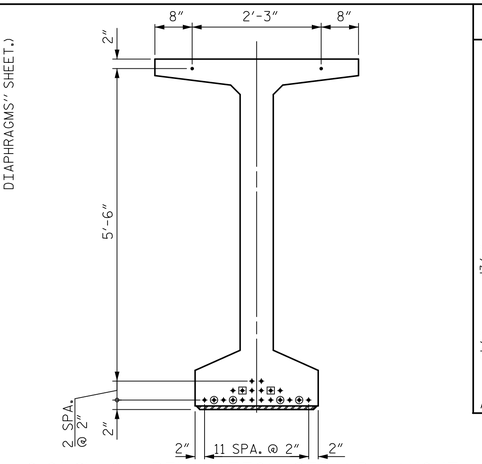


0.6" Ø LOW RELAXATION STRAND LAYOUT

DEBONDING LEGEND

- ● FULLY BONDED STRANDS
- ▣ STRANDS DEBONDED FOR 4'-0" FROM END OF GIRDER
- ⊙ STRANDS DEBONDED FOR 8'-0" FROM END OF GIRDER

## BAR TYPES

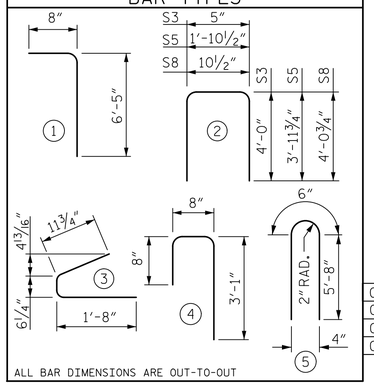


ALL BAR DIMENSIONS ARE OUT-TO-OUT

| | |
|---|---|
| GC1, GC4 | |
| GC2, GC3 | |
| GC1, GC4 | |
| GC2, GC3 | |

## 0.6" Ø L. R. GRADE 270 STRANDS

| AREA (SQUARE INCHES) | ULTIMATE STRENGTH (LBS. PER STRAND) | APPLIED PRESTRESS (LBS. PER STRAND) |
|---|---|---|
| 0.217 | 58,600 | 43,950 |

## REINFORCING STEEL FOR ONE GDR

| BAR | NUMBER | SIZE | TYPE | LENGTH | WEIGHT |
|---|---|---|---|---|---|
| S1 | 150 | #4 | 1 | 7'-1" | 710 |
| S3 | 14 | #4 | 2 | 8'-5" | 79 |
| S4 | 84 | #4 | 3 | 3'-2" | 178 |
| S5 | 2 | #5 | 2 | 9'-10" | 21 |
| S6 | 150 | #5 | 4 | 4'-5" | 691 |
| S8 | 2 | #5 | 2 | 9'-0" | 19 |
| S9 | 31 | #5 | STR | 3'-3" | 105 |
| S11 | 4 | #5 | 5 | 11'-10" | 49 |
| S11 | 8 | #5 | 5 | 11'-10" | 99 |
| S12 | 8 | #4 | STR | 8'-0" | 43 |
| S13 | 8 | #4 | STR | 22'-3" | 119 |
| S14 | 12 | #5 | 5 | 11'-10" | 148 |
| S15 | 8 | #4 | 5 | 11'-10" | 63 |

## QUANTITIES FOR ONE GIRDER

| | REINFORCING STEEL | 5,000 PSI CONCRETE | 0.6" Ø L.R. STRANDS |
|---|---|---|---|
| | LB. | C.Y. | No. |
| GC1 | 2,106 | 18.6 | 22 |
| GC2 | 2,232 | 18.6 | 22 |
| GC3 | 2,232 | 18.6 | 22 |
| GC4 | 2,106 | 18.6 | 22 |

## GIRDERS REQUIRED

| NUMBER | LENGTH | TOTAL LENGTH |
|---|---|---|
| 4 | 81'-9⅞" | 327.29' |

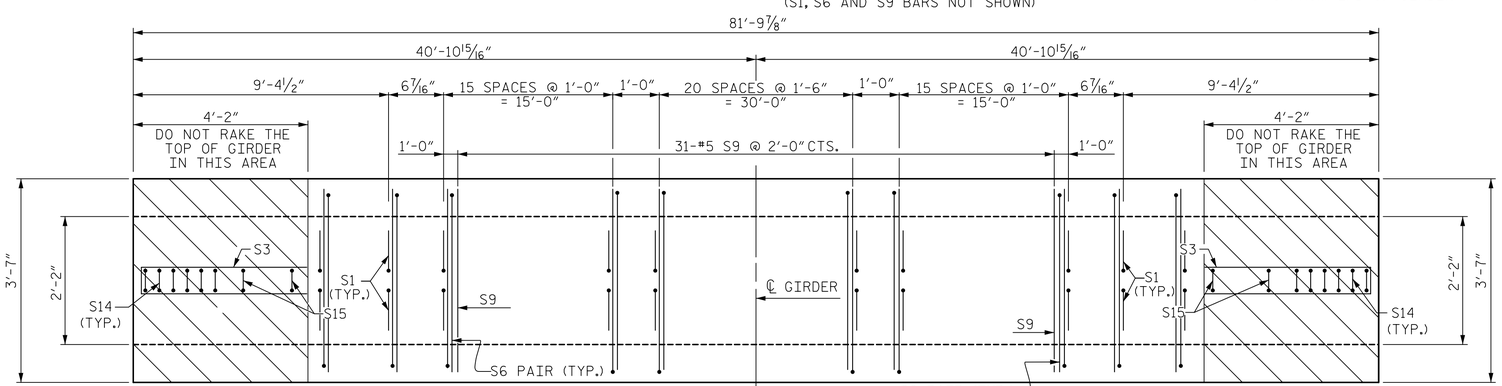


PLAN OF GIRDER

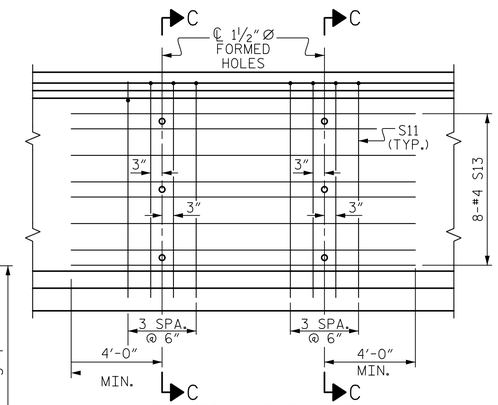


PARTIAL ELEVATION

SHOWING INTERMEDIATE STEEL DIAPHRAGM REINFORCING STEEL FOR GIRDER Nos. GC2 & GC3

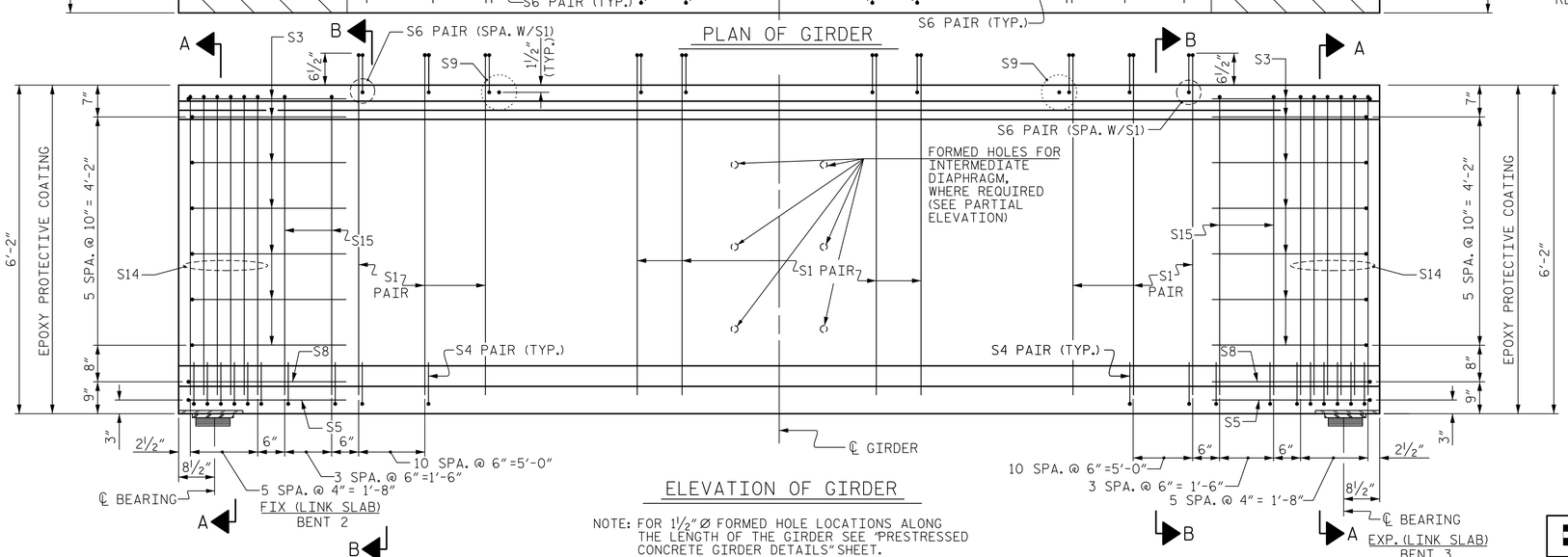


ELEVATION OF GIRDER

NOTE: FOR 1½" Ø FORMED HOLE LOCATIONS ALONG THE LENGTH OF THE GIRDER SEE "PRESTRESSED CONCRETE GIRDER DETAILS" SHEET.

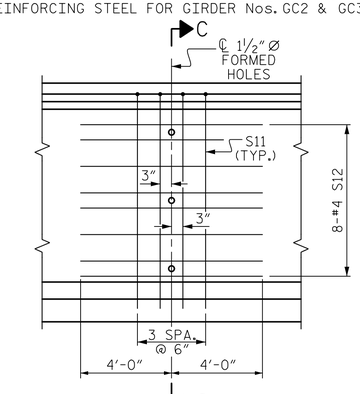


PARTIAL ELEVATION

SHOWING INTERMEDIATE STEEL DIAPHRAGM REINFORCING STEEL FOR GIRDER Nos. GC1 & GC4

NOTES:

THE TRANSFER OF LOAD FROM THE ANCHORAGES TO THE GIRDER SHALL BE DONE WHEN CONCRETE HAS REACHED A COMPRESSIVE STRENGTH OF NOT LESS THAN 4,000 PSI FOR SPAN C GIRDERS.

GIRDER CONCRETE SHALL HAVE A MINIMUM COMPRESSIVE STRENGTH OF 5,000 PSI AT THE AGE OF 28 DAYS.

DocuSigned by: James P. Gregg 12/6/2018

NORTH CAROLINA PROFESSIONAL SEAL 046632 ENGINEER JAMES P. GREGG

PROJECT NO. R-1015

CRAVEN COUNTY

STATION: POC STA. 138+31.09 -L-

SHEET 3 OF 6

STATE OF NORTH CAROLINA
DEPARTMENT OF TRANSPORTATION
RALEIGH

74" PRESTRESSED CONCRETE MODIFIED BULB TEE SPAN C

LEFT LANE

HNTB NORTH CAROLINA, P.C.
NC License No. C-1554
343 E. Six Forks Rd., Suite 200, Raleigh, N.C. 27609

| | | | |
|---|---|---|---|
| DRAWN BY | A. SMITH | DATE | 7/18 |
| CHECKED BY | E. JOWZA | DATE | 9/18 |
| DESIGN ENGINEER OF RECORD | J. GREGG | DATE | 10/18 |

DWG. NO. 15

REVISIONS

| NO. | BY | DATE | NO. | BY | DATE |
|---|---|---|---|---|---|
| 1 | | | 3 | | |
| 2 | | | 4 | | |

SHEET NO. S03-15

TOTAL SHEETS 46

**DOCUMENT NOT CONSIDERED FINAL UNLESS ALL SIGNATURES COMPLETED**

DocuSign Envelope ID: 609DC734-B6DC-4B94-B1D1-420DCB5CA916

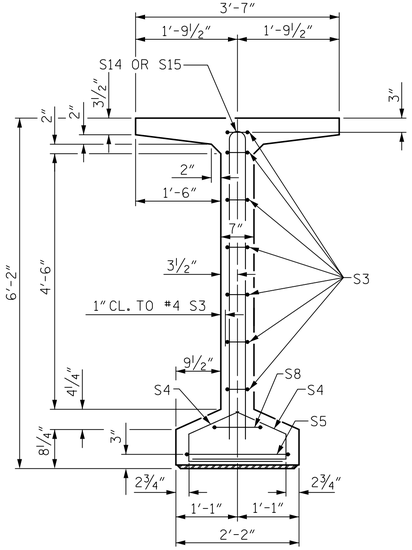


SECTION A-A

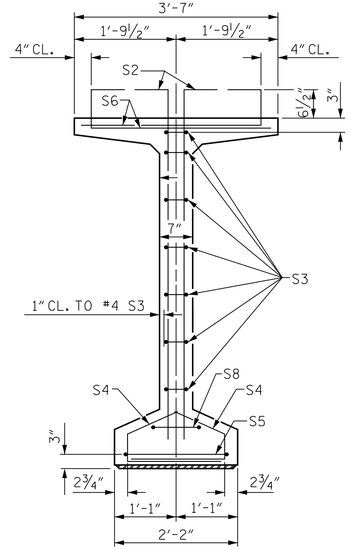


SECTION B-B

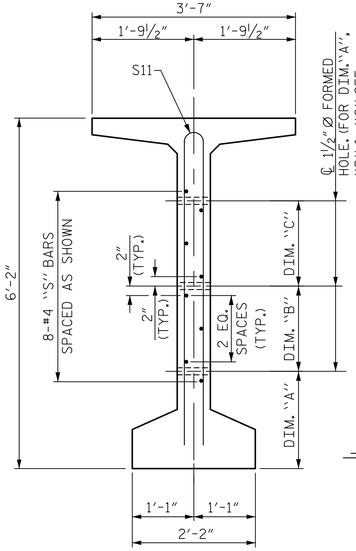


SECTION C-C

(S1, S6 AND S9 BARS NOT SHOWN)

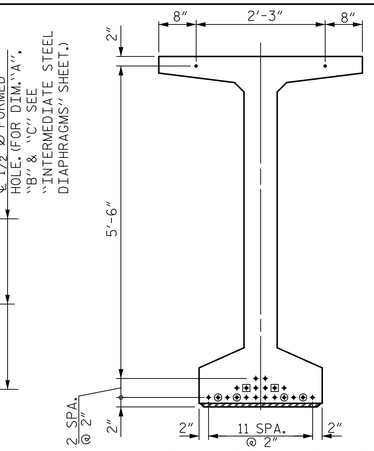


0.6"Ø LOW RELAXATION STRAND LAYOUT

DEBONDING LEGEND

- ● FULLY BONDED STRANDS
- ▣ STRANDS DEBONDED FOR 4'-0" FROM END OF GIRDER
- ⊙ STRANDS DEBONDED FOR 8'-0" FROM END OF GIRDER

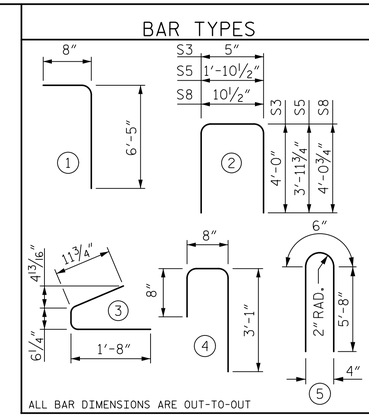


## 0.6"Ø L. R. GRADE 270 STRANDS

| AREA (SQUARE INCHES) | ULTIMATE STRENGTH (LBS. PER STRAND) | APPLIED PRESTRESS (LBS. PER STRAND) |
|---|---|---|
| 0.217 | 58,600 | 43,950 |

## REINFORCING STEEL FOR ONE GDR

| BAR | NUMBER | SIZE | TYPE | LENGTH | WEIGHT | |
|---|---|---|---|---|---|---|
| S1 | 120 | #4 | 1 | 7'-1" | 568 | |
| S2 | 12 | #5 | 1 | 7'-1" | 89 | |
| S3 | 14 | #4 | 2 | 8'-5" | 79 | |
| S4 | 84 | #4 | 3 | 3'-2" | 178 | |
| S5 | 2 | #5 | 2 | 9'-10" | 21 | |
| S6 | 132 | #5 | 4 | 4'-5" | 608 | |
| S8 | 2 | #5 | 2 | 9'-0" | 19 | |
| S9 | 24 | #5 | STR | 3'-3" | 81 | |
| S11 | 4 | #5 | 5 | 11'-10" | 49 | GD1, GD4 |
| S11 | 8 | #5 | 5 | 11'-10" | 99 | GD2, GD3 |
| S12 | 8 | #4 | STR | 8'-0" | 43 | GD1, GD4 |
| S13 | 8 | #4 | STR | 22'-7" | 121 | GD2, GD3 |
| S14 | 6 | #5 | 5 | 11'-10" | 74 | |
| S15 | 3 | #4 | 5 | 11'-10" | 24 | |

## QUANTITIES FOR ONE GIRDER

| | REINFORCING STEEL | 5,000 PSI CONCRETE | 0.6"Ø L.R. STRANDS |
|---|---|---|---|
| | LB. | C.Y. | No. |
| GD1 | 1,833 | 15.6 | 22 |
| GD2 | 1,961 | 15.6 | 22 |
| GD3 | 1,961 | 15.6 | 22 |
| GD4 | 1,833 | 15.6 | 22 |

## GIRDERS REQUIRED

| NUMBER | LENGTH | TOTAL LENGTH |
|---|---|---|
| 4 | 68'-8¼" | 274.75' |

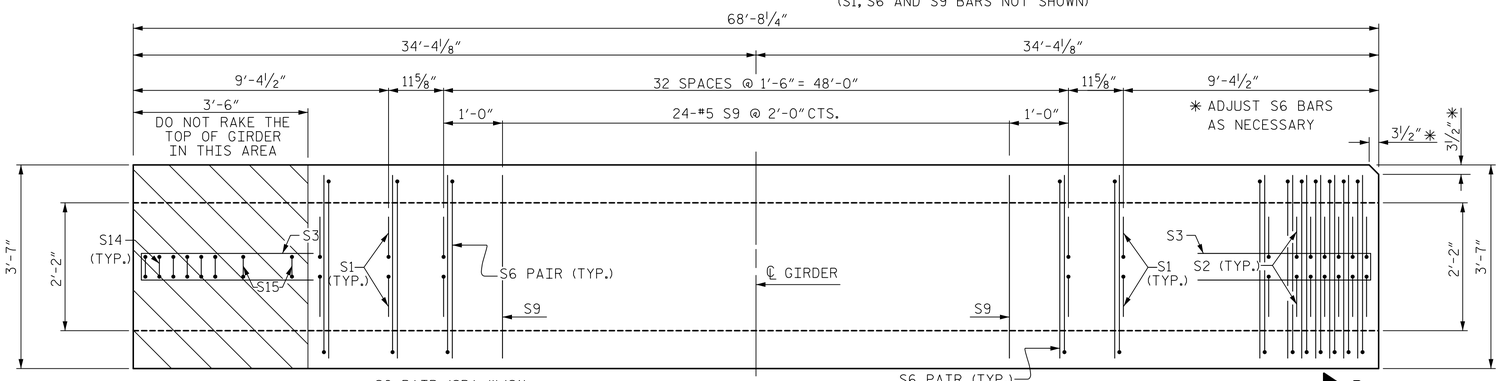


PLAN OF GIRDER

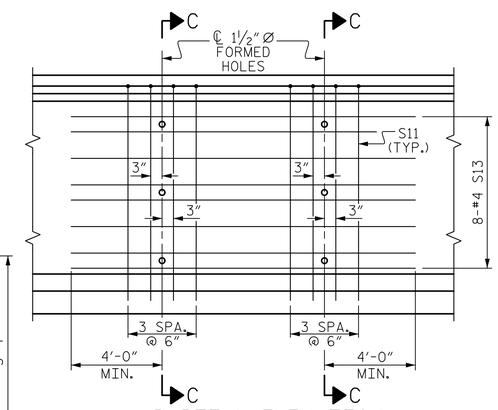


PARTIAL ELEVATION

SHOWING INTERMEDIATE STEEL DIAPHRAGM REINFORCING STEEL FOR GIRDER Nos. GD2 & GD3

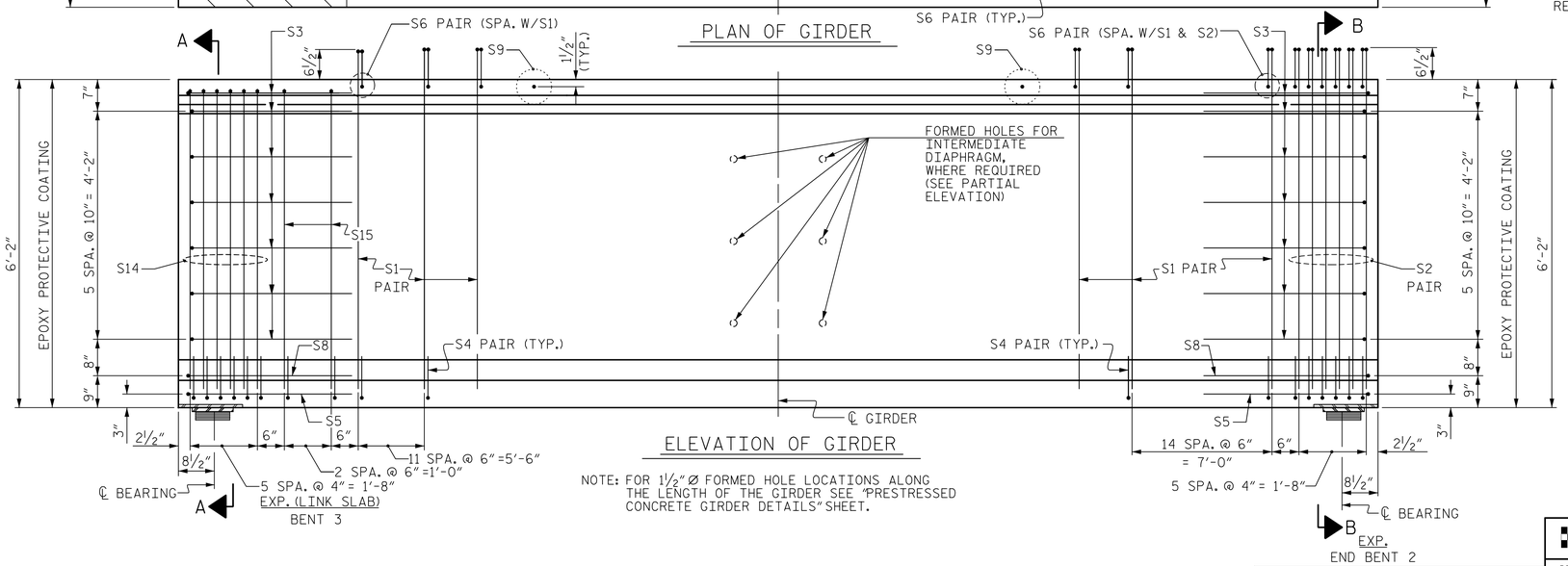


ELEVATION OF GIRDER

NOTE: FOR 1½"Ø FORMED HOLE LOCATIONS ALONG THE LENGTH OF THE GIRDER SEE "PRESTRESSED CONCRETE GIRDER DETAILS" SHEET.

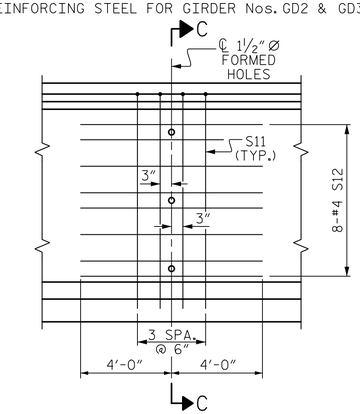


PARTIAL ELEVATION

SHOWING INTERMEDIATE STEEL DIAPHRAGM REINFORCING STEEL FOR GIRDER Nos. GD1 & GD4

NOTES:

THE TRANSFER OF LOAD FROM THE ANCHORAGES TO THE GIRDER SHALL BE DONE WHEN CONCRETE HAS REACHED A COMPRESSIVE STRENGTH OF NOT LESS THAN 4,000 PSI FOR SPAN D GIRDERS.

GIRDER CONCRETE SHALL HAVE A MINIMUM COMPRESSIVE STRENGTH OF 5,000 PSI AT THE AGE OF 28 DAYS.

DocuSigned by: James P. Gregg 024AB9C404...

NORTH CAROLINA PROFESSIONAL SEAL 046632 ENGINEER JAMES P. GREGG

12/6/2018

PROJECT NO. R-1015

CRAVEN COUNTY

STATION: POC STA. 138+31.09 -L-

SHEET 4 OF 6

STATE OF NORTH CAROLINA
DEPARTMENT OF TRANSPORTATION
RALEIGH

74" PRESTRESSED CONCRETE MODIFIED BULB TEE SPAN D

LEFT LANE

HNTB NORTH CAROLINA, P.C.
NC License No. C-1554
343 E. Six Forks Rd., Suite 200, Raleigh, N.C. 27609

DRAWN BY A. SMITH DATE 7/18
CHECKED BY E. JOWZA DATE 9/18
DESIGN ENGINEER OF RECORD J. GREGG DATE 10/18

DWG. NO. 16

| REVISIONS | | | | | | SHEET NO. |
|---|---|---|---|---|---|---|
| NO. | BY | DATE | NO. | BY | DATE | S03-16 |
| 1 | | | 3 | | | TOTAL SHEETS |
| 2 | | | 4 | | | 46 |

DOCUMENT NOT CONSIDERED FINAL UNLESS ALL SIGNATURES COMPLETED

DocuSign Envelope ID: 5B67B2BB-4DD6-4E6E-81A0-C0FE3C5CF566

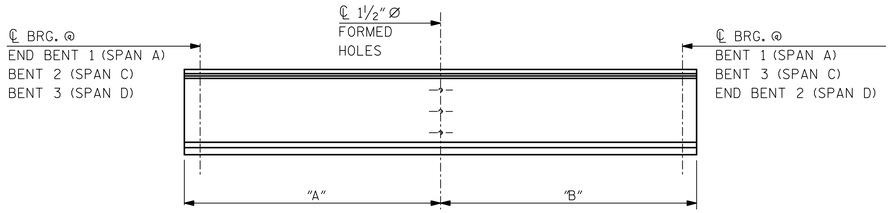


| DIM. | GA1 | GA4 | GC1 | GC4 | GD1 | GD4 |
|---|---|---|---|---|---|---|
| "A" | 43′-1¾″ | 29′-6¾″ | 48′-0¼″ | 33′-9⅝″ | 41′-7¼″ | 27′-1″ |
| "B" | 29′-6¾″ | 43′-1¾″ | 33′-9⅝″ | 48′-0¼″ | 27′-1″ | 41′-7¼″ |

GIRDER ELEVATION

GA1 & GA4
GC1 & GC4
GD1 & GD4

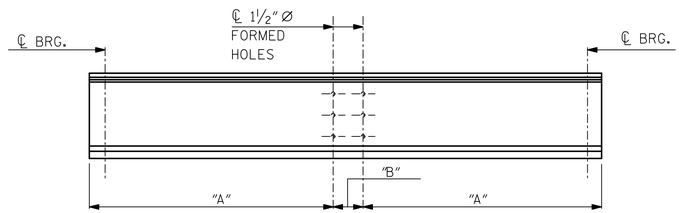


| DIM. | GA2 & GA3 | GC2 & GC3 | GD2 & GD3 |
|---|---|---|---|
| "A" | 29′-6¾″ | 33′-9⅝″ | 27′-1″ |
| "B" | 13′-7″ | 14′-2⅝″ | 14′-6¼″ |

GIRDER ELEVATION

GA2 & GA3
GC2 & GC3
GD2 & GD3

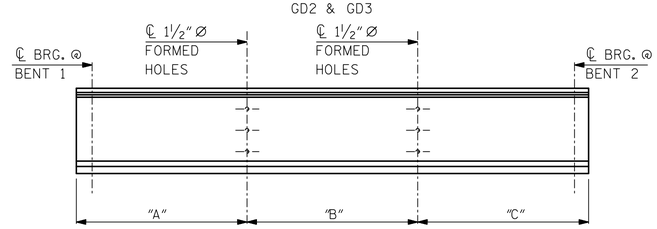


| DIM. | GB1 | GB4 |
|---|---|---|
| "A" | 50′-4″ | 36′-5⅜″ |
| "B" | 43′-4⅝″ | 43′-4⅝″ |
| "C" | 36′-5⅜″ | 50′-4″ |

GIRDER ELEVATION

GB1 & GB4

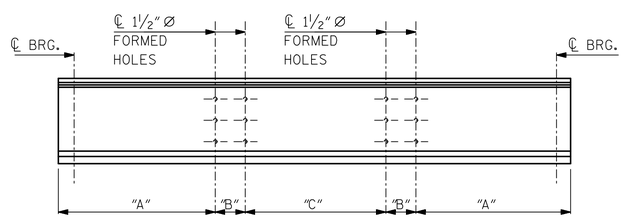


| DIM. | GB2 & GB3 |
|---|---|
| "A" | 36′-5⅜″ |
| "B" | 13′-10⅝″ |
| "C" | 29′-6″ |

GIRDER ELEVATION

GB2 & GB3

## 1½″ Ø FORMED HOLE LOCATIONS

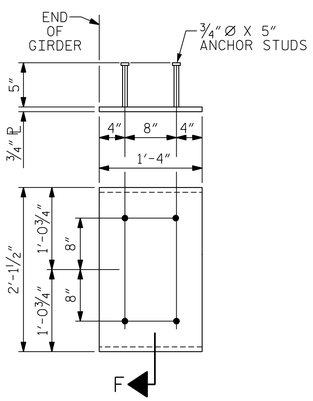


## EMBEDDED PLATE "B-1" DETAILS FOR 74″ MODIFIED BULB TEES

(2 REQ'D PER GIRDER)

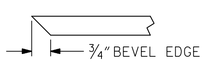


## SECTION "F"

(SEE NOTES)

## NOTES

ALL PRESTRESSING STRANDS SHALL BE 7-WIRE LOW-RELAXATION GRADE 270 STRANDS AND SHALL CONFORM TO AASHTO M203 EXCEPT FOR SAMPLING REQUIREMENTS WHICH SHALL BE IN ACCORDANCE WITH THE STANDARD SPECIFICATIONS.

ALL REINFORCING STEEL SHALL BE GRADE 60.

APPLY EPOXY PROTECTIVE COATING TO END OF GIRDER SURFACES INDICATED IN ELEVATION VIEW.

EMBEDDED PLATE "B-1" SHALL BE GALVANIZED IN ACCORDANCE WITH THE STANDARD SPECIFICATIONS.

ANCHOR STUDS SHALL CONFORM TO AASHTO M169 GRADES 1010 THROUGH 1020 OR APPROVED EQUAL, AND SHALL MEET THE TYPE "B" REQUIREMENTS OF SUBSECTION 7.3 OF THE ANSI/AASHTO/AWS D1.5 BRIDGE WELDING CODE.

PRESTRESSING STRANDS SHALL BE CUT FLUSH WITH THE GIRDER ENDS.

DEPENDING ON THE TYPE OF SYSTEM USED TO SUPPORT THE DECK SLAB FORMS, PRESET ANCHORS MAY BE NECESSARY IN THE PRESTRESSED CONCRETE GIRDER.

THE TOP SURFACE OF THE GIRDER, EXCLUDING THE OUTSIDE 4″, SHALL BE RAKED TO A DEPTH OF ¼″.

WHEN DRAPED STRANDS ARE DETAILED, THE LONGITUDINAL LOCATION OF THE HOLD DOWN DEVICES SHALL BE WITHIN 6″ OF THE LOCATION SHOWN AND THE CENTER OF GRAVITY OF THE GROUP OF DRAPED STRANDS SHALL BE LOCATED WITHIN ½″ OF THE THEORETICAL LOCATION SHOWN.

A 2″ × 2″ CHAMFER IS ALLOWED AT THE INTERSECTION OF THE WEB AND THE BOTTOM FLANGE.

THE CONTRACTOR HAS THE OPTION TO PROVIDE, AT NO ADDITIONAL COST TO THE DEPARTMENT, 2 ADDITIONAL STRANDS AT THE TOP OF THE GIRDER TO FACILITATE TYING OF THE REINFORCING STEEL. THESE STRANDS SHALL BE PULLED TO A LOAD OF 4500 lbs.

PROJECT NO. R-1015
CRAVEN COUNTY
STATION: POC STA. 138+31.09 -L-

SHEET 5 OF 6

DocuSigned by: James P. Gregg
DFE024AB9C404...

NORTH CAROLINA PROFESSIONAL SEAL 046632 ENGINEER JAMES P. GREGG
11/20/2018

STATE OF NORTH CAROLINA
DEPARTMENT OF TRANSPORTATION
RALEIGH

PRESTRESSED CONCRETE GIRDER DETAILS

LEFT LANE

HNTB NORTH CAROLINA, P.C.
NC License No. C-1554
343 E. Six Forks Rd., Suite 200, Raleigh, N.C. 27609

DRAWN BY A. SMITH DATE 7/18
CHECKED BY E. JOWZA DATE 9/18
DESIGN ENGINEER OF RECORD J. GREGG DATE 10/18

DWG. NO. 17

| REVISIONS | | | | | | SHEET NO. |
|---|---|---|---|---|---|---|
| NO. | BY | DATE | NO. | BY | DATE | S3-17 |
| 1 | | | 3 | | | TOTAL SHEETS |
| 2 | | | 4 | | | 46 |

DOCUMENT NOT CONSIDERED FINAL UNLESS ALL SIGNATURES COMPLETED

DocuSign Envelope ID: 5B67B2BB-4DD6-4E6E-81A0-C0FE3C5CF566

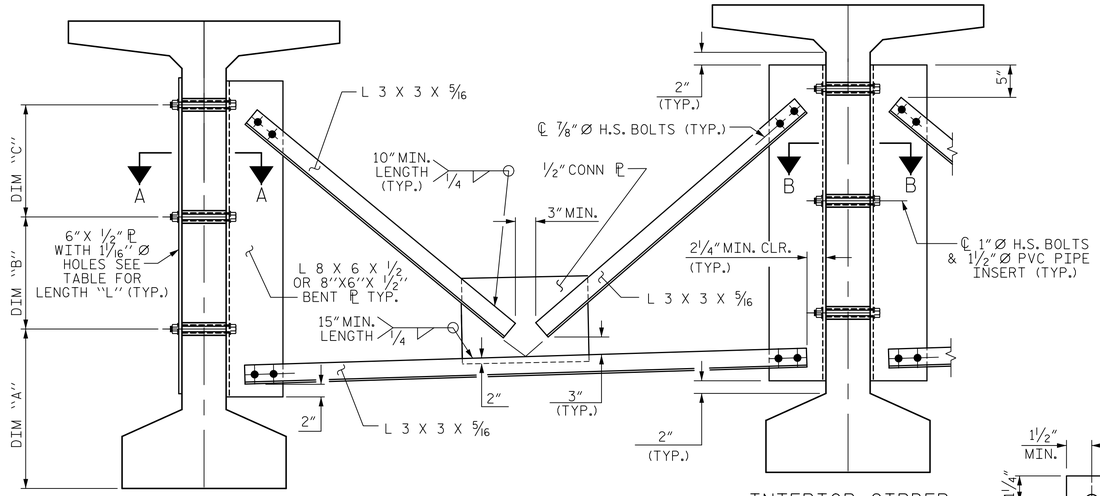


EXTERIOR GIRDER

INTERIOR GIRDER

## PART SECTION AT INTERMEDIATE DIAPHRAGM

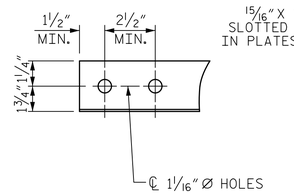


ANGLE END

(L 3 X 3 X 5/16)

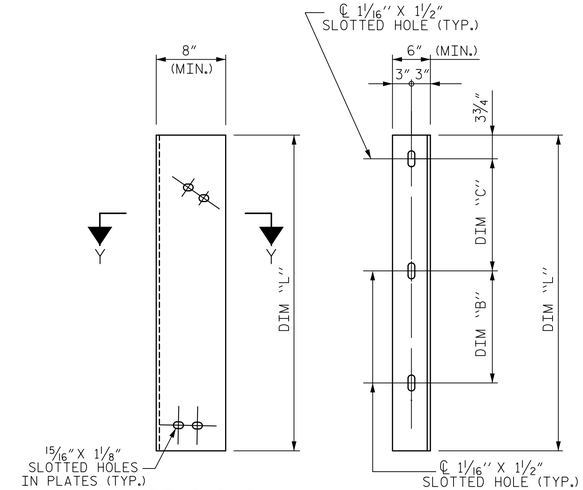


DIAPHRAGM FACE

WEB FACE

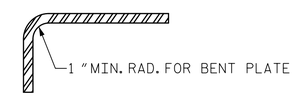


SECTION Y-Y

## CONNECTOR PLATE DETAIL

## STRUCTURAL STEEL NOTES

ALL INTERMEDIATE DIAPHRAGM STEEL AND CONNECTOR PLATES SHALL BE AASHTO M270 GRADE 50 OR APPROVED EQUAL.

TENSION ON THE ASTM A325 BOLTS THROUGH THE ANGLE MEMBER SHALL BE CALIBRATED USING DIRECT TENSION INDICATOR WASHERS IN ACCORDANCE WITH THE STANDARD SPECIFICATIONS.

TENSION ON THE ASTM A449 BOLTS THROUGH THE GIRDER WEB SHALL BE SNUG TIGHTENED FOLLOWED BY AN ADDITIONAL 1/4 TURN.

THE PLATES, BENT PLATES, AND ANGLES SHALL BE METALLIZED IN ACCORDANCE WITH THE STANDARD SPECIFICATIONS. FOR THERMAL SPRAYED COATINGS (METALLIZATION), SEE SPECIAL PROVISIONS.

FOR METALLIZATION, APPLY A THERMAL SPRAYED COATING WITH A SEAL COAT TO ALL STEEL DIAPHRAGM SURFACES IN ACCORDANCE WITH THE DEPARTMENTS THERMAL SPRAYED COATINGS (METALLIZATION) PROGRAM, THERMAL SPRAYED COATINGS SPECIAL PROVISION AND SECTION 442 OF THE STANDARD SPECIFICATIONS.

GALVANIZE THE HIGH STRENGTH BOLTS, NUTS, WASHERS AND DIRECT TENSION INDICATORS IN ACCORDANCE WITH THE STANDARD SPECIFICATIONS.

USE AN ASTM F436 HARDENED WASHER WITH STANDARD AND SLOTTED HOLES UNDER EACH BOLT HEAD AND NUT.

FOR BOLTS THROUGH THE GIRDER WEB, PROVIDE SUFFICIENT LENGTH OF THREADS ON ALL BOLTS TO ACCOMMODATE WASHERS AND THE THICKNESS OF CONNECTING MEMBER PLUS AT LEAST 1/4" PROJECTION BEYOND THE NUT.

INTERMEDIATE DIAPHRAGM ASSEMBLY SHALL COMPLY WITH SECTION 1072 OF THE STANDARD SPECIFICATIONS.

SUBMIT TWO SETS OF WORKING DRAWINGS FOR THE INTERMEDIATE DIAPHRAGM ASSEMBLY FOR REVIEW, COMMENTS AND ACCEPTANCE. AFTER REVIEW, COMMENTS, AND ACCEPTANCE, SUBMIT SEVEN SETS FOR DISTRIBUTION.

IN THE EXTERIOR BAYS, PLACE TEMPORARY STRUTS BETWEEN PRESTRESSED GIRDERS ADJACENT TO THE STEEL DIAPHRAGMS. STRUTS SHALL REMAIN IN PLACE 3 DAYS AFTER CONCRETE IS PLACED.

THE COST OF THE STEEL DIAPHRAGMS AND ASSEMBLIES SHALL BE INCLUDED IN THE UNIT PRICE BID FOR PRESTRESSED CONCRETE GIRDERS.

## TABLE

| GIRDER TYPE | DIM "A" | DIM "B" | DIM "C" | DIM "L" |
|---|---|---|---|---|
| 74" BULB TEE | 2'-0 3/4" | 1'-6" | 1'-6" | 4'-2" |

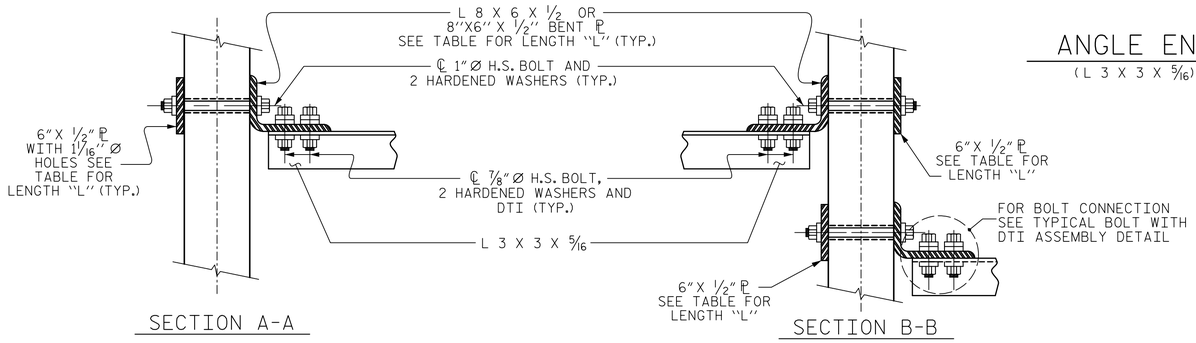


SECTION A-A

SECTION B-B

## CONNECTION DETAILS

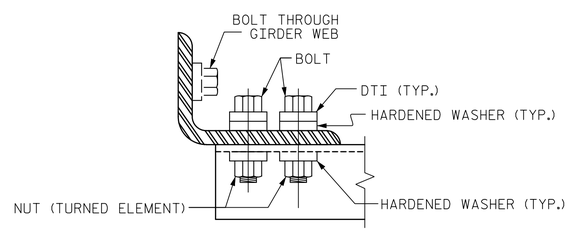


## BOLT WITH DTI ASSEMBLY DETAIL

PROJECT NO. R-1015

CRAVEN COUNTY

STATION: POC STA. 138+31.09 -L-

SHEET 6 OF 6

STATE OF NORTH CAROLINA
DEPARTMENT OF TRANSPORTATION
RALEIGH

STANDARD
INTERMEDIATE
STEEL DIAPHRAGMS
FOR 74" MODIFIED BULB TEE
PRESTRESSED CONCRETE
GIRDERS
LEFT LANE

NORTH CAROLINA PROFESSIONAL SEAL 046632 ENGINEER JAMES P. GREGG

DocuSigned by: James P. Gregg 7B0FE024AB9C404...

11/20/2018

| | | | |
|---|---|---|---|
| ASSEMBLED BY : A. SMITH | DATE : 7/18 | | |
| CHECKED BY : E. JOWZA | DATE : 9/18 | | |
| DRAWN BY : RWW 11/09 | REV. 10/1/11 | MAA/GM | |
| CHECKED BY : GM 11/09 | REV. 12/17 | MAA/THC | |

DOCUMENT NOT CONSIDERED FINAL UNLESS ALL SIGNATURES COMPLETED

HNTB

HNTB NORTH CAROLINA, P.C.
NC License No. C-1554
343 E. Six Forks Rd., Suite 200, Raleigh, N.C. 27609

| | | | |
|---|---|---|---|
| DRAWN BY | A. SMITH | DATE | 7/18 |
| CHECKED BY | E. JOWZA | DATE | 9/18 |
| DESIGN ENGINEER OF RECORD | J. GREGG | DATE | 10/18 |

DWG. NO. 18

| REVISIONS | | | | | | SHEET NO. |
|---|---|---|---|---|---|---|
| NO. | BY | DATE | NO. | BY | DATE | S03-18 |
| 1 | | | 3 | | | TOTAL SHEETS |
| 2 | | | 4 | | | 46 |

STD. NO. PCG11

DocuSign Envelope ID: 5B67B2BB-4DD6-4E6E-81A0-C0FE3C5CF566

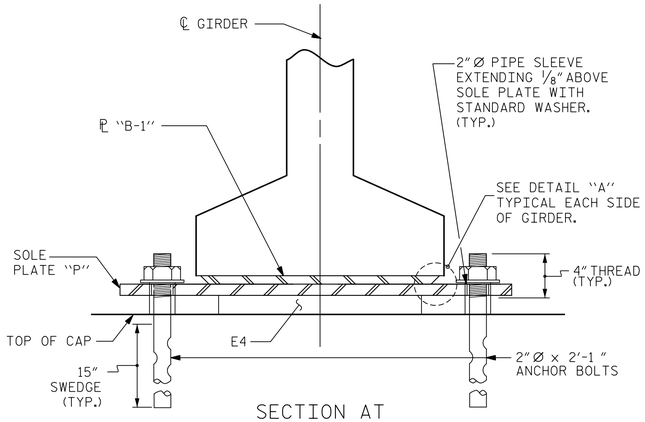


SECTION AT EXPANSION BEARING

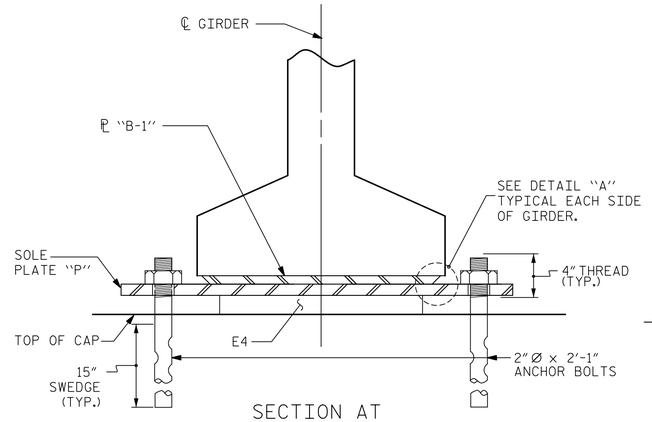


SECTION AT FIXED BEARING

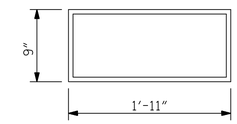


E4 ( 32 REQ'D )

PLAN VIEW OF ELASTOMERIC BEARING

TYPE V

## NOTES

AT ALL FIXED POINTS OF SUPPORT, NUTS FOR ANCHOR BOLTS ARE TO BE TIGHTENED FINGER TIGHT AND THEN BACKED OFF 1/2 TURN. THE THREAD OF THE NUT AND BOLT SHALL THEN BE BURRED WITH A SHARP POINTED TOOL.

THE 2″Ø PIPE SLEEVE SHALL BE CUT FROM SCHEDULE 40 PVC PLASTIC PIPE. THE PVC PLASTIC PIPE SHALL MEET THE REQUIREMENTS OF ASTM D1785.

STEEL SOLE PLATES, ANCHOR BOLTS, NUTS, AND WASHERS SHALL BE GALVANIZED IN ACCORDANCE WITH THE STANDARD SPECIFICATIONS.

PRIOR TO WELDING, GRIND THE GALVANIZED SURFACE OF THE PORTION OF THE EMBEDDED PLATE AND SOLE PLATE THAT ARE TO BE WELDED. AFTER WELDING, DAMAGED GALVANIZED SURFACES SHALL BE REPAIRED IN ACCORDANCE WITH THE STANDARD SPECIFICATIONS.

WHEN WELDING THE SOLE PLATE TO THE EMBEDDED PLATE IN THE GIRDER, USE TEMPERATURE INDICATING WAX PENS, OR OTHER SUITABLE MEANS, TO ENSURE THAT THE TEMPERATURE OF THE SOLE PLATE DOES NOT EXCEED 300°F. TEMPERATURES ABOVE THIS MAY DAMAGE THE ELASTOMER.

SOLE PLATE "P", BOLTS, NUTS, WASHERS, AND PIPE SLEEVE SHALL BE INCLUDED IN THE PAY ITEM FOR PRESTRESSED CONCRETE GIRDERS.

ANCHOR BOLTS SHALL MEET THE REQUIREMENTS OF ASTM A449. NUTS SHALL MEET THE REQUIREMENTS OF AASHTO M291-DH OR AASHTO M292-2H. WASHERS SHALL MEET THE REQUIREMENTS OF AASHTO M293. NO SHOP DRAWINGS ARE REQUIRED FOR ANCHOR BOLTS, NUTS AND WASHERS. SHOP INSPECTION IS REQUIRED.

ALL SURFACES OF BEARING PLATES SHALL BE SMOOTH AND STRAIGHT.

THE ELASTOMER IN THE STEEL REINFORCED BEARINGS SHALL HAVE A SHEAR MODULUS OF 0.160 KSI, IN ACCORDANCE WITH AASHTO M251.

FOR STEEL REINFORCED ELASTOMERIC BEARINGS, SEE SPECIAL PROVISIONS.

ALL SOLE PLATES SHALL BE AASHTO M270 GRADE 36.

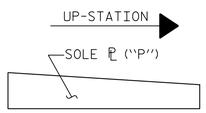


SOLE ℗ PLACEMENT DETAIL

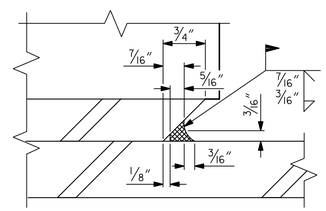


DETAIL "A"

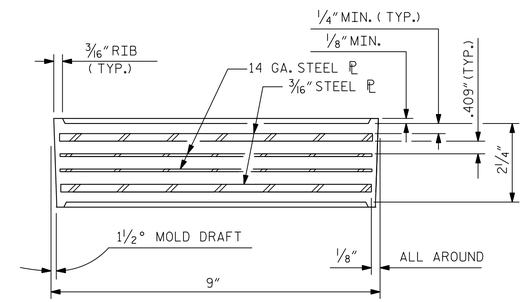


TYPICAL SECTION OF ELASTOMERIC BEARINGS

| MAXIMUM ALLOWABLE SERVICE LOADS | |
|---|---|
| D.L.+L.L. (NO IMPACT) | |
| TYPE V | 365 k |

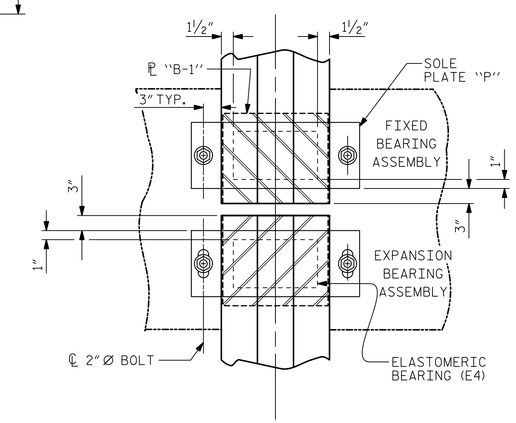


TYPICAL PLAN

PROJECT NO. R-1015

CRAVEN COUNTY

STATION: POC STA. 138+31.09 -L-

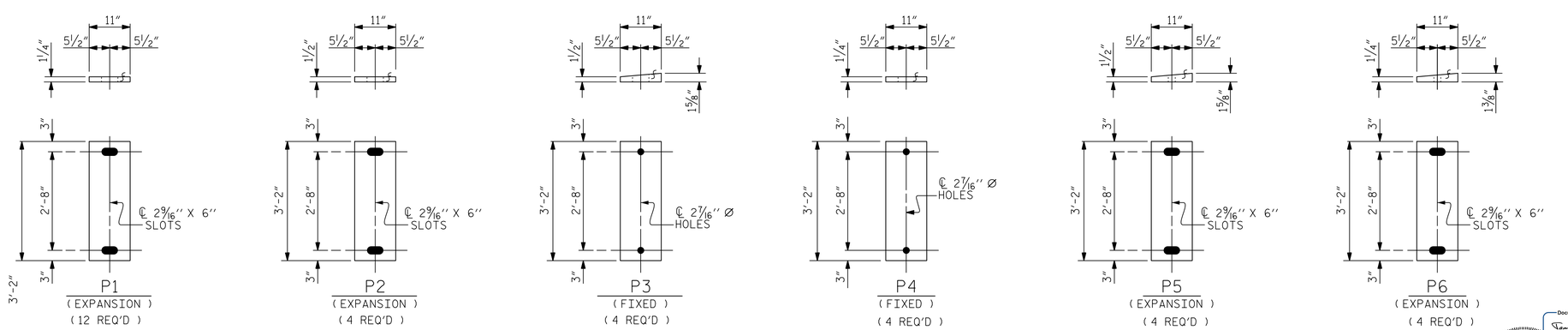


SOLE PLATE DETAILS ("P")

DocuSigned by: James P. Gregg 0C0FE024AB9C404...

NORTH CAROLINA PROFESSIONAL SEAL 046632 ENGINEER JAMES P. GREGG

11/20/2018

STATE OF NORTH CAROLINA
DEPARTMENT OF TRANSPORTATION
RALEIGH

STANDARD
ELASTOMERIC BEARING DETAILS
PRESTRESSED CONCRETE GIRDER SUPERSTRUCTURE
LEFT LANE

| REVISIONS | | | | | | SHEET NO. |
|---|---|---|---|---|---|---|
| NO. | BY | DATE | NO. | BY | DATE | S03-19 |
| 1 | | | 3 | | | TOTAL SHEETS |
| 2 | | | 4 | | | 46 |

| | | | |
|---|---|---|---|
| ASSEMBLED BY : A. SMITH | DATE : 7/18 | | |
| CHECKED BY : E. JOWZA | DATE : 10/18 | | |
| DRAWN BY : EEM 2/97 | REV. 10/1/11 | MAA/GM | |
| CHECKED BY : VAP 2/97 | REV. 6/13 | AAC/MAA | |
| | REV. 12/17 | MAA/THC | |

DOCUMENT NOT CONSIDERED FINAL UNLESS ALL SIGNATURES COMPLETED

HNTB NORTH CAROLINA, P.C.
NC License No. C-1554
343 E. Six Forks Rd., Suite 200, Raleigh, N.C. 27609

DRAWN BY A. SMITH DATE 7/18
CHECKED BY E. JOWZA DATE 10/18
DESIGN ENGINEER OF RECORD J. GREGG DATE 10/18

DWG. NO. 19

STD. NO. EB4

DocuSign Envelope ID: 5B67B2BB-4DD6-4E6E-81A0-C0FE3C5CF566

## DEAD LOAD DEFLECTION TABLE FOR SPAN A

| 0.6"Ø LOW RELAXATION STRANDS | GIRDER 1 | | | | | | | | | | |
|---|---|---|---|---|---|---|---|---|---|---|---|
| TENTH POINTS | 0.00 | 0.10 | 0.20 | 0.30 | 0.40 | 0.50 | 0.60 | 0.70 | 0.80 | 0.90 | 1.00 |
| CAMBER (GIRDER ALONE IN PLACE) ↑ | 0.000 | 0.028 | 0.052 | 0.071 | 0.083 | 0.088 | 0.083 | 0.071 | 0.052 | 0.028 | 0.000 |
| DEFLECTION DUE TO SUPERIMPOSED D.L. ✳ ↓ | 0.000 | 0.009 | 0.017 | 0.024 | 0.028 | 0.030 | 0.028 | 0.024 | 0.017 | 0.009 | 0.000 |
| FINAL CAMBER ↑ | 0 | 1/4 | 7/16 | 9/16 | 11/16 | 11/16 | 11/16 | 9/16 | 7/16 | 1/4 | 0 |

## DEAD LOAD DEFLECTION TABLE FOR SPAN A

| 0.6"Ø LOW RELAXATION STRANDS | GIRDERS 2 & 3 | | | | | | | | | | |
|---|---|---|---|---|---|---|---|---|---|---|---|
| TENTH POINTS | 0.00 | 0.10 | 0.20 | 0.30 | 0.40 | 0.50 | 0.60 | 0.70 | 0.80 | 0.90 | 1.00 |
| CAMBER (GIRDER ALONE IN PLACE) ↑ | 0.000 | 0.028 | 0.052 | 0.071 | 0.083 | 0.088 | 0.083 | 0.071 | 0.052 | 0.028 | 0.000 |
| DEFLECTION DUE TO SUPERIMPOSED D.L. ✳ ↓ | 0.000 | 0.011 | 0.021 | 0.029 | 0.034 | 0.036 | 0.034 | 0.029 | 0.021 | 0.011 | 0.000 |
| FINAL CAMBER ↑ | 0 | 3/16 | 3/8 | 1/2 | 9/16 | 5/8 | 9/16 | 1/2 | 3/8 | 3/16 | 0 |

✳ INCLUDES FUTURE WEARING SURFACE IN SUPERIMPOSED DEAD LOAD.
ALL VALUES ARE SHOWN IN FEET (DECIMAL FORM), EXCEPT "FINAL CAMBER", WHICH IS GIVEN IN INCHES (FRACTION FORM).

## DEAD LOAD DEFLECTION TABLE FOR SPAN A

| 0.6"Ø LOW RELAXATION STRANDS | GIRDER 4 | | | | | | | | | | |
|---|---|---|---|---|---|---|---|---|---|---|---|
| TENTH POINTS | 0.00 | 0.10 | 0.20 | 0.30 | 0.40 | 0.50 | 0.60 | 0.70 | 0.80 | 0.90 | 1.00 |
| CAMBER (GIRDER ALONE IN PLACE) ↑ | 0.000 | 0.028 | 0.052 | 0.071 | 0.083 | 0.088 | 0.083 | 0.071 | 0.052 | 0.028 | 0.000 |
| DEFLECTION DUE TO SUPERIMPOSED D.L. ✳ ↓ | 0.000 | 0.010 | 0.019 | 0.026 | 0.031 | 0.033 | 0.031 | 0.026 | 0.019 | 0.010 | 0.000 |
| FINAL CAMBER ↑ | 0 | 3/16 | 3/8 | 9/16 | 5/8 | 11/16 | 5/8 | 9/16 | 3/8 | 3/16 | 0 |

## DEAD LOAD DEFLECTION TABLE FOR SPAN C

| 0.6"Ø LOW RELAXATION STRANDS | GIRDER 1 | | | | | | | | | | |
|---|---|---|---|---|---|---|---|---|---|---|---|
| TENTH POINTS | 0.00 | 0.10 | 0.20 | 0.30 | 0.40 | 0.50 | 0.60 | 0.70 | 0.80 | 0.90 | 1.00 |
| CAMBER (GIRDER ALONE IN PLACE) ↑ | 0.000 | 0.032 | 0.060 | 0.082 | 0.096 | 0.101 | 0.096 | 0.082 | 0.060 | 0.032 | 0.000 |
| DEFLECTION DUE TO SUPERIMPOSED D.L. ✳ ↓ | 0.000 | 0.015 | 0.030 | 0.042 | 0.049 | 0.052 | 0.049 | 0.042 | 0.030 | 0.015 | 0.000 |
| FINAL CAMBER ↑ | 0 | 3/16 | 3/8 | 1/2 | 9/16 | 9/16 | 9/16 | 1/2 | 3/8 | 3/16 | 0 |

## DEAD LOAD DEFLECTION TABLE FOR SPAN C

| 0.6"Ø LOW RELAXATION STRANDS | GIRDERS 2 & 3 | | | | | | | | | | |
|---|---|---|---|---|---|---|---|---|---|---|---|
| TENTH POINTS | 0.00 | 0.10 | 0.20 | 0.30 | 0.40 | 0.50 | 0.60 | 0.70 | 0.80 | 0.90 | 1.00 |
| CAMBER (GIRDER ALONE IN PLACE) ↑ | 0.000 | 0.032 | 0.060 | 0.082 | 0.096 | 0.101 | 0.096 | 0.082 | 0.060 | 0.032 | 0.000 |
| DEFLECTION DUE TO SUPERIMPOSED D.L. ✳ ↓ | 0.000 | 0.017 | 0.033 | 0.046 | 0.054 | 0.057 | 0.054 | 0.046 | 0.033 | 0.017 | 0.000 |
| FINAL CAMBER ↑ | 0 | 3/16 | 5/16 | 7/16 | 1/2 | 1/2 | 1/2 | 7/16 | 5/16 | 3/16 | 0 |

## DEAD LOAD DEFLECTION TABLE FOR SPAN C

| 0.6"Ø LOW RELAXATION STRANDS | GIRDER 4 | | | | | | | | | | |
|---|---|---|---|---|---|---|---|---|---|---|---|
| TENTH POINTS | 0.00 | 0.10 | 0.20 | 0.30 | 0.40 | 0.50 | 0.60 | 0.70 | 0.80 | 0.90 | 1.00 |
| CAMBER (GIRDER ALONE IN PLACE) ↑ | 0.000 | 0.032 | 0.060 | 0.082 | 0.096 | 0.101 | 0.096 | 0.082 | 0.060 | 0.032 | 0.000 |
| DEFLECTION DUE TO SUPERIMPOSED D.L. ✳ ↓ | 0.000 | 0.016 | 0.031 | 0.042 | 0.050 | 0.052 | 0.050 | 0.042 | 0.031 | 0.016 | 0.000 |
| FINAL CAMBER ↑ | 0 | 3/16 | 3/8 | 1/2 | 9/16 | 9/16 | 9/16 | 1/2 | 3/8 | 3/16 | 0 |

## DEAD LOAD DEFLECTION TABLE FOR SPAN D

| 0.6"Ø LOW RELAXATION STRANDS | GIRDER 1 | | | | | | | | | | |
|---|---|---|---|---|---|---|---|---|---|---|---|
| TENTH POINTS | 0.00 | 0.10 | 0.20 | 0.30 | 0.40 | 0.50 | 0.60 | 0.70 | 0.80 | 0.90 | 1.00 |
| CAMBER (GIRDER ALONE IN PLACE) ↑ | 0.000 | 0.025 | 0.048 | 0.066 | 0.077 | 0.081 | 0.077 | 0.066 | 0.048 | 0.025 | 0.000 |
| DEFLECTION DUE TO SUPERIMPOSED D.L. ✳ ↓ | 0.000 | 0.008 | 0.015 | 0.021 | 0.025 | 0.026 | 0.025 | 0.021 | 0.015 | 0.008 | 0.000 |
| FINAL CAMBER ↑ | 0 | 3/16 | 3/8 | 9/16 | 5/8 | 11/16 | 5/8 | 9/16 | 3/8 | 3/16 | 0 |

## DEAD LOAD DEFLECTION TABLE FOR SPAN D

| 0.6"Ø LOW RELAXATION STRANDS | GIRDERS 2 & 3 | | | | | | | | | | |
|---|---|---|---|---|---|---|---|---|---|---|---|
| TENTH POINTS | 0.00 | 0.10 | 0.20 | 0.30 | 0.40 | 0.50 | 0.60 | 0.70 | 0.80 | 0.90 | 1.00 |
| CAMBER (GIRDER ALONE IN PLACE) ↑ | 0.000 | 0.025 | 0.048 | 0.066 | 0.077 | 0.081 | 0.077 | 0.066 | 0.048 | 0.025 | 0.000 |
| DEFLECTION DUE TO SUPERIMPOSED D.L. ✳ ↓ | 0.000 | 0.008 | 0.016 | 0.022 | 0.027 | 0.028 | 0.027 | 0.022 | 0.016 | 0.008 | 0.000 |
| FINAL CAMBER ↑ | 0 | 3/16 | 3/8 | 1/2 | 5/8 | 5/8 | 5/8 | 1/2 | 3/8 | 3/16 | 0 |

## DEAD LOAD DEFLECTION TABLE FOR SPAN D

| 0.6"Ø LOW RELAXATION STRANDS | GIRDER 4 | | | | | | | | | | |
|---|---|---|---|---|---|---|---|---|---|---|---|
| TENTH POINTS | 0.00 | 0.10 | 0.20 | 0.30 | 0.40 | 0.50 | 0.60 | 0.70 | 0.80 | 0.90 | 1.00 |
| CAMBER (GIRDER ALONE IN PLACE) ↑ | 0.000 | 0.025 | 0.048 | 0.066 | 0.077 | 0.081 | 0.077 | 0.066 | 0.048 | 0.025 | 0.000 |
| DEFLECTION DUE TO SUPERIMPOSED D.L. ✳ ↓ | 0.000 | 0.008 | 0.015 | 0.021 | 0.025 | 0.026 | 0.024 | 0.021 | 0.015 | 0.008 | 0.000 |
| FINAL CAMBER ↑ | 0 | 3/16 | 3/8 | 9/16 | 5/8 | 11/16 | 5/8 | 9/16 | 3/8 | 3/16 | 0 |

## DEAD LOAD DEFLECTION TABLE FOR SPAN B

| 0.6"Ø LOW RELAXATION STRANDS | GIRDER 1 | | | | | | | | | | | | | | | | | | | | |
|---|---|---|---|---|---|---|---|---|---|---|---|---|---|---|---|---|---|---|---|---|---|
| TWENTIETH POINTS | 0.00 | 0.05 | 0.10 | 0.15 | 0.20 | 0.25 | 0.30 | 0.35 | 0.40 | 0.45 | 0.50 | 0.55 | 0.60 | 0.65 | 0.70 | 0.75 | 0.80 | 0.85 | 0.90 | 0.95 | 1.00 |
| CAMBER (GIRDER ALONE IN PLACE) ↑ | 0.000 | 0.059 | 0.116 | 0.170 | 0.220 | 0.264 | 0.301 | 0.330 | 0.352 | 0.365 | 0.370 | 0.365 | 0.352 | 0.330 | 0.301 | 0.264 | 0.220 | 0.170 | 0.116 | 0.059 | 0.000 |
| DEFLECTION DUE TO SUPERIMPOSED D.L. ✳ ↓ | 0.000 | 0.035 | 0.069 | 0.102 | 0.133 | 0.160 | 0.183 | 0.202 | 0.215 | 0.224 | 0.226 | 0.224 | 0.216 | 0.202 | 0.184 | 0.160 | 0.133 | 0.103 | 0.069 | 0.035 | 0.000 |
| FINAL CAMBER ↑ | 0 | 5/16 | 9/16 | 13/16 | 1 1/16 | 1 1/4 | 1 7/16 | 1 9/16 | 1 5/8 | 1 11/16 | 1 3/4 | 1 11/16 | 1 5/8 | 1 9/16 | 1 3/8 | 1 1/4 | 1 1/16 | 13/16 | 9/16 | 5/16 | 0 |

## DEAD LOAD DEFLECTION TABLE FOR SPAN B

| 0.6"Ø LOW RELAXATION STRANDS | GIRDERS 2 & 3 | | | | | | | | | | | | | | | | | | | | |
|---|---|---|---|---|---|---|---|---|---|---|---|---|---|---|---|---|---|---|---|---|---|
| TWENTIETH POINTS | 0.00 | 0.05 | 0.10 | 0.15 | 0.20 | 0.25 | 0.30 | 0.35 | 0.40 | 0.45 | 0.50 | 0.55 | 0.60 | 0.65 | 0.70 | 0.75 | 0.80 | 0.85 | 0.90 | 0.95 | 1.00 |
| CAMBER (GIRDER ALONE IN PLACE) ↑ | 0.000 | 0.059 | 0.116 | 0.170 | 0.220 | 0.264 | 0.301 | 0.330 | 0.352 | 0.365 | 0.370 | 0.365 | 0.352 | 0.330 | 0.301 | 0.264 | 0.220 | 0.170 | 0.116 | 0.059 | 0.000 |
| DEFLECTION DUE TO SUPERIMPOSED D.L. ✳ ↓ | 0.000 | 0.039 | 0.078 | 0.115 | 0.150 | 0.181 | 0.207 | 0.228 | 0.243 | 0.253 | 0.256 | 0.253 | 0.243 | 0.228 | 0.207 | 0.181 | 0.150 | 0.115 | 0.078 | 0.039 | 0.000 |
| FINAL CAMBER ↑ | 0 | 1/4 | 7/16 | 11/16 | 13/16 | 1 | 1 1/8 | 1 1/4 | 1 5/16 | 1 3/8 | 1 3/8 | 1 3/8 | 1 5/16 | 1 1/4 | 1 1/8 | 1 | 13/16 | 11/16 | 7/16 | 1/4 | 0 |

## DEAD LOAD DEFLECTION TABLE FOR SPAN B

| 0.6"Ø LOW RELAXATION STRANDS | GIRDER 4 | | | | | | | | | | | | | | | | | | | | |
|---|---|---|---|---|---|---|---|---|---|---|---|---|---|---|---|---|---|---|---|---|---|
| TWENTIETH POINTS | 0.00 | 0.05 | 0.10 | 0.15 | 0.20 | 0.25 | 0.30 | 0.35 | 0.40 | 0.45 | 0.50 | 0.55 | 0.60 | 0.65 | 0.70 | 0.75 | 0.80 | 0.85 | 0.90 | 0.95 | 1.00 |
| CAMBER (GIRDER ALONE IN PLACE) ↑ | 0.000 | 0.059 | 0.116 | 0.170 | 0.220 | 0.264 | 0.301 | 0.330 | 0.352 | 0.365 | 0.370 | 0.365 | 0.352 | 0.330 | 0.301 | 0.264 | 0.220 | 0.170 | 0.116 | 0.059 | 0.000 |
| DEFLECTION DUE TO SUPERIMPOSED D.L. ✳ ↓ | 0.000 | 0.036 | 0.071 | 0.105 | 0.136 | 0.164 | 0.188 | 0.207 | 0.221 | 0.229 | 0.232 | 0.229 | 0.221 | 0.207 | 0.188 | 0.164 | 0.136 | 0.105 | 0.071 | 0.036 | 0.000 |
| FINAL CAMBER ↑ | 0 | 1/4 | 9/16 | 3/4 | 1 | 1 3/16 | 1 3/8 | 1 1/2 | 1 9/16 | 1 5/8 | 1 5/8 | 1 5/8 | 1 9/16 | 1 1/2 | 1 3/8 | 1 3/16 | 1 | 3/4 | 9/16 | 1/4 | 0 |

DocuSigned by:
James P. Gregg
DocuSign Envelope ID: 5B67FE024AB9C404...

NORTH CAROLINA PROFESSIONAL SEAL 046632 ENGINEER JAMES P. GREGG

11/20/2018

PROJECT NO. R-1015

CRAVEN COUNTY

STATION: POC STA. 138+31.09 -L-

STATE OF NORTH CAROLINA
DEPARTMENT OF TRANSPORTATION
RALEIGH

SUPERSTRUCTURE

DEAD LOAD DEFLECTIONS

LEFT LANE

HNTB NORTH CAROLINA, P.C.
NC License No. C-1554
343 E. Six Forks Rd., Suite 200, Raleigh, N.C. 27609

DRAWN BY A. SMITH DATE 7/18
CHECKED BY E. JOWZA DATE 10/18
DESIGN ENGINEER OF RECORD J. GREGG DATE 10/18

DWG. NO. 20

| REVISIONS | | | | | | SHEET NO. |
|---|---|---|---|---|---|---|
| NO. | BY | DATE | NO. | BY | DATE | S03-20 |
| 1 | | | 3 | | | TOTAL SHEETS |
| 2 | | | 4 | | | 46 |

**DOCUMENT NOT CONSIDERED FINAL UNLESS ALL SIGNATURES COMPLETED**

DocuSign Envelope ID: 5B67B2BB-4DD6-4E6E-81A0-C0FE3C5CF566

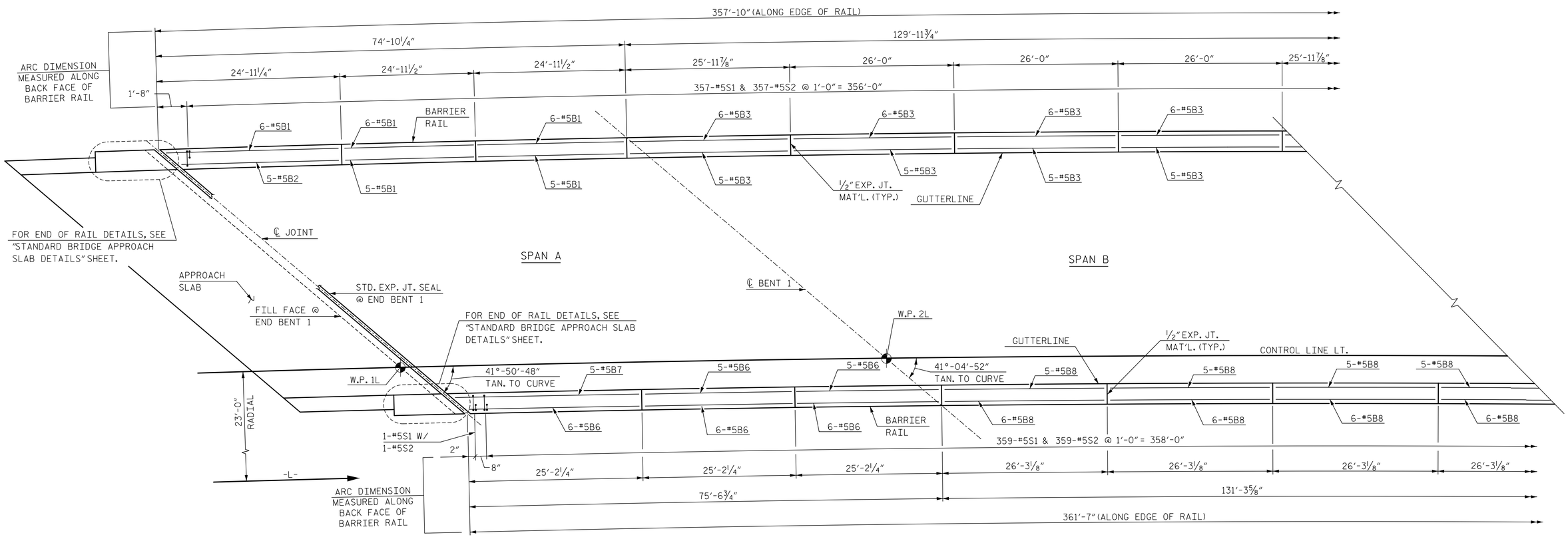


# PLAN OF BARRIER RAIL

NOTE: EDGE OF SLAB NOT SHOWN FOR CLARITY.

**PROJECT NO.** R-1015

CRAVEN **COUNTY**

**STATION:** POC STA. 138+31.09 -L-

SHEET 1 OF 3

DocuSigned by: James P. Gregg
B0FE024AB9C404...

NORTH CAROLINA PROFESSIONAL SEAL 046632 ENGINEER JAMES P. GREGG

11/20/2018

**DOCUMENT NOT CONSIDERED FINAL UNLESS ALL SIGNATURES COMPLETED**

HNTB

HNTB NORTH CAROLINA, P.C.
NC License No. C-1554
343 E. Six Forks Rd., Suite 200, Raleigh, N.C. 27609

| | | | |
|---|---|---|---|
| DRAWN BY | A. SMITH | DATE | 7/18 |
| CHECKED BY | E. JOWZA | DATE | 10/18 |
| DESIGN ENGINEER OF RECORD | J. GREGG | DATE | 10/18 |

DWG. NO. 21

STATE OF NORTH CAROLINA
**DEPARTMENT OF TRANSPORTATION**
RALEIGH

# CONCRETE BARRIER RAIL

## LEFT LANE

| REVISIONS | | | | | | SHEET NO. |
|---|---|---|---|---|---|---|
| NO. | BY | DATE | NO. | BY | DATE | S03-21 |
| 1 | | | 3 | | | TOTAL SHEETS |
| 2 | | | 4 | | | 46 |

DocuSign Envelope ID: 5B67B2BB-4DD6-4E6E-81A0-C0FE3C5CF566

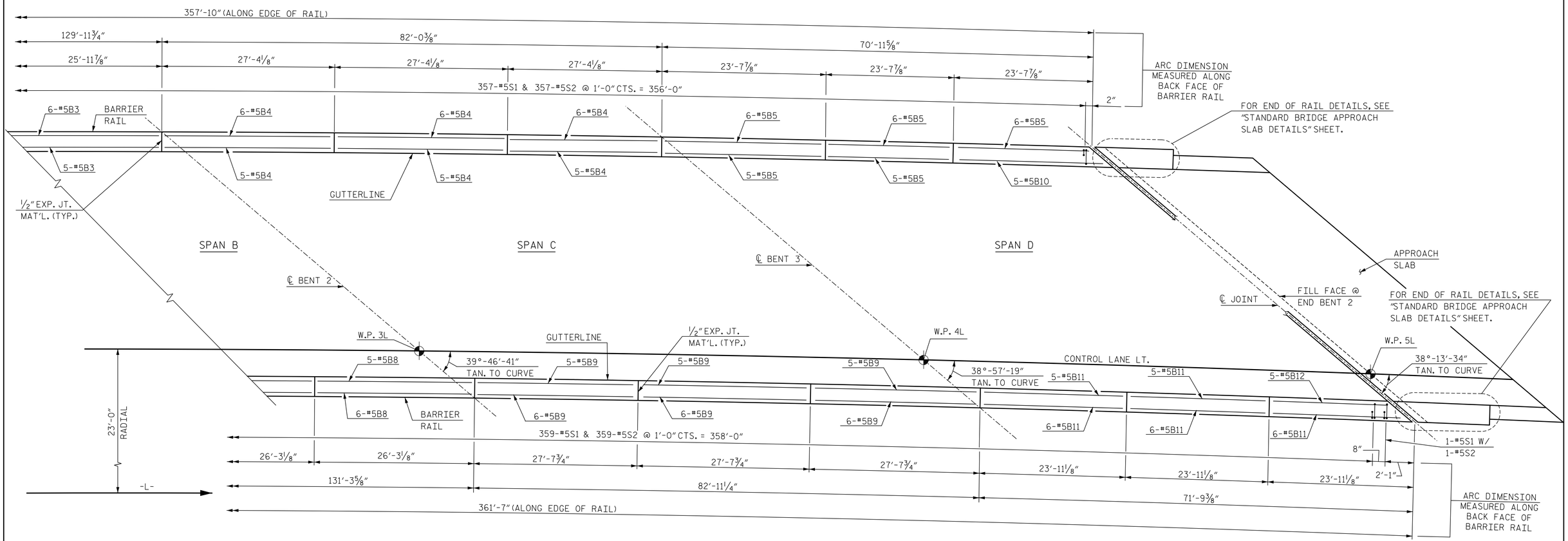


# PLAN OF BARRIER RAIL

NOTE: EDGE OF SLAB NOT SHOWN FOR CLARITY.

**PROJECT NO.** R-1015

CRAVEN **COUNTY**

**STATION:** POC STA. 138+31.09 -L-

SHEET 2 OF 3

DocuSigned by: James P. Gregg
F0BFE024AB9C404...

NORTH CAROLINA PROFESSIONAL SEAL 046632 ENGINEER JAMES P. GREGG

11/20/2018

STATE OF NORTH CAROLINA
**DEPARTMENT OF TRANSPORTATION**
RALEIGH

CONCRETE BARRIER RAIL

LEFT LANE

**DOCUMENT NOT CONSIDERED FINAL UNLESS ALL SIGNATURES COMPLETED**

HNTB NORTH CAROLINA, P.C.
NC License No. C-1554
343 E. Six Forks Rd., Suite 200, Raleigh, N.C. 27609

DRAWN BY A. SMITH DATE 7/18
CHECKED BY E. JOWZA DATE 10/18
DESIGN ENGINEER OF RECORD J. GREGG DATE 10/18

DWG. NO. 22

| REVISIONS | | | | | | SHEET NO. |
|---|---|---|---|---|---|---|
| NO. | BY | DATE | NO. | BY | DATE | S03-22 |
| 1 | | | 3 | | | TOTAL SHEETS |
| 2 | | | 4 | | | 46 |

DocuSign Envelope ID: 5B67B2BB-4DD6-4E6E-81A0-C0FE3C5CF566

# NOTES

THE BARRIER RAIL IN EACH SPAN SHALL NOT BE CAST UNTIL ALL SLAB CONCRETE IN THAT SPAN HAS BEEN CAST AND HAS REACHED A MINIMUM COMPRESSIVE STRENGTH OF 3,000 PSI.

ALL REINFORCING STEEL IN BARRIER RAILS SHALL BE EPOXY COATED.

GROOVED CONTRACTION JOINTS, 1/2" IN DEPTH, SHALL BE TOOLED IN ALL EXPOSED FACES OF THE BARRIER RAIL AND IN ACCORDANCE WITH ARTICLE 825-10(B) OF THE STANDARD SPECIFICATIONS. THE CONTRACTION JOINT SHALL BE LOCATED AT EACH THIRD POINT BETWEEN BARRIER RAIL EXPANSION JOINTS. ONLY ONE CONTRACTION JOINT IS REQUIRED AT MIDPOINT OF BARRIER RAIL SEGMENTS LESS THAN 20 FEET IN LENGTH AND NO CONTRACTION JOINTS ARE REQUIRED FOR THOSE SEGMENTS LESS THAN 10 FEET IN LENGTH.

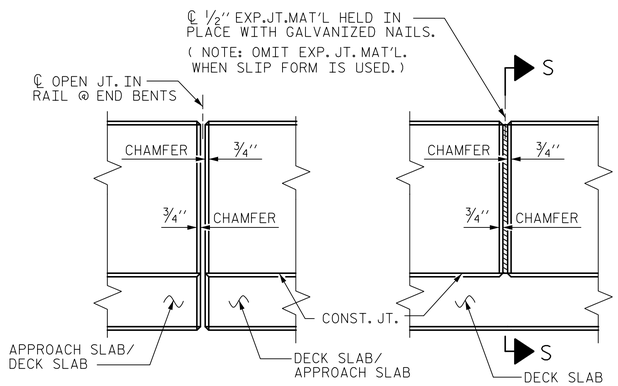


ELEVATION AT EXPANSION JOINTS

## BARRIER RAIL DETAILS

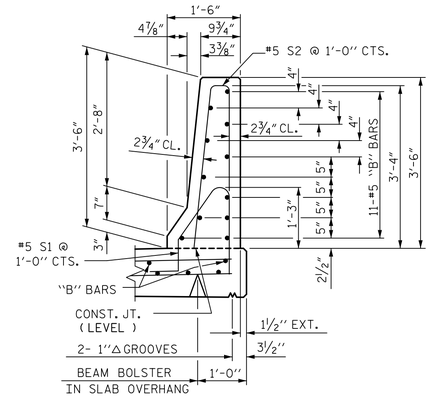


SECTION THRU RAIL

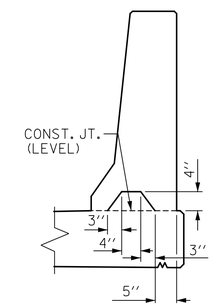


SECTION S-S

AT DAM IN OPEN JOINT (THIS IS TO BE USED ONLY WHEN SLIP FORM IS USED)

## BAR TYPES

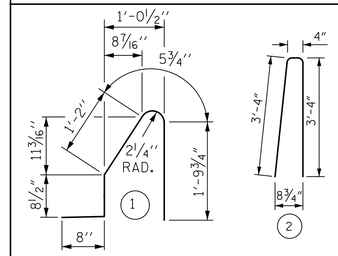


ALL BAR DIMENSIONS ARE OUT TO OUT

## BILL OF MATERIAL

FOR CONCRETE BARRIER RAIL ONLY

| BAR | NO. | SIZE | TYPE | LENGTH | WEIGHT |
|---|---|---|---|---|---|
| ✳ B1 | 28 | #5 | STR. | 24'-7" | 718 |
| ✳ B2 | 5 | #5 | STR. | 23'-2" | 121 |
| ✳ B3 | 55 | #5 | STR. | 25'-7" | 1,468 |
| ✳ B4 | 33 | #5 | STR. | 27'-0" | 929 |
| ✳ B5 | 28 | #5 | STR. | 23'-3" | 679 |
| ✳ B6 | 28 | #5 | STR. | 24'-10" | 725 |
| ✳ B7 | 5 | #5 | STR. | 26'-1" | 136 |
| ✳ B8 | 55 | #5 | STR. | 25'-11" | 1,487 |
| ✳ B9 | 33 | #5 | STR. | 27'-3" | 938 |
| ✳ B10 | 5 | #5 | STR. | 24'-8" | 129 |
| ✳ B11 | 28 | #5 | STR. | 23'-7" | 689 |
| ✳ B12 | 5 | #5 | STR. | 21'-11" | 114 |
| ✳ S1 | 718 | #5 | 1 | 4'-10" | 3,620 |
| ✳ S2 | 718 | #5 | 2 | 7'-0" | 5,242 |

| | | |
|---|---|---|
| ✳ EPOXY COATED REINFORCING STEEL | 16,995 | LBS. |
| CLASS AA CONCRETE | 97.8 | CU. YDS. |
| CONCRETE BARRIER RAIL | 719.4 | LIN. FT. |

NOTE: FOR BARRIER RAIL EXTENSIONS ON APPROACH SLABS, SEE "STANDARD BRIDGE APPROACH SLAB DETAILS" SHEET.

PROJECT NO. R-1015

CRAVEN COUNTY

STATION: POC STA. 138+31.09 -L-

SHEET 3 OF 3

DocuSigned by: James P. Gregg 9BDFE024AB9C404...

NORTH CAROLINA PROFESSIONAL SEAL 046632 ENGINEER JAMES P. GREGG

11/20/2018

STATE OF NORTH CAROLINA
DEPARTMENT OF TRANSPORTATION
RALEIGH

STANDARD

CONCRETE BARRIER RAIL

LEFT LANE

| REVISIONS | | | | | | SHEET NO. |
|---|---|---|---|---|---|---|
| NO. | BY | DATE | NO. | BY | DATE | S03-23 |
| 1 | | | 3 | | | TOTAL SHEETS |
| 2 | | | 4 | | | 46 |

HNTB NORTH CAROLINA, P.C.
NC License No. C-1554
343 E. Six Forks Rd., Suite 200, Raleigh, N.C. 27609

DRAWN BY A. SMITH DATE 7/18
CHECKED BY E. JOWZA DATE 10/18
DESIGN ENGINEER OF RECORD J. GREGG DATE 10/18

DWG. NO. 23

DOCUMENT NOT CONSIDERED FINAL UNLESS ALL SIGNATURES COMPLETED

| | | | |
|---|---|---|---|
| ASSEMBLED BY : A. SMITH | DATE : 7/18 | | |
| CHECKED BY : E. JOWZA | DATE : 9/18 | | |
| DRAWN BY : ARB 5/87 | REV. 7/12 | MAA/GM | |
| CHECKED BY : SJD 9/87 | REV. 6/13 | MAA/GM | |
| | REV. 12/17 | MAA/THC | |

STD. NO. CBR1

DocuSign Envelope ID: 5B67B2BB-4DD6-4E6E-81A0-C0FE3C5CF566

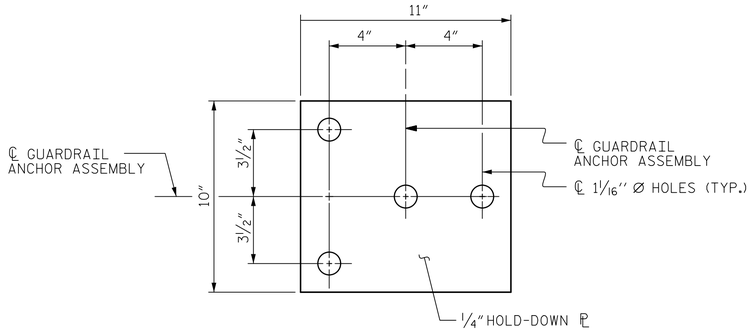


PLAN

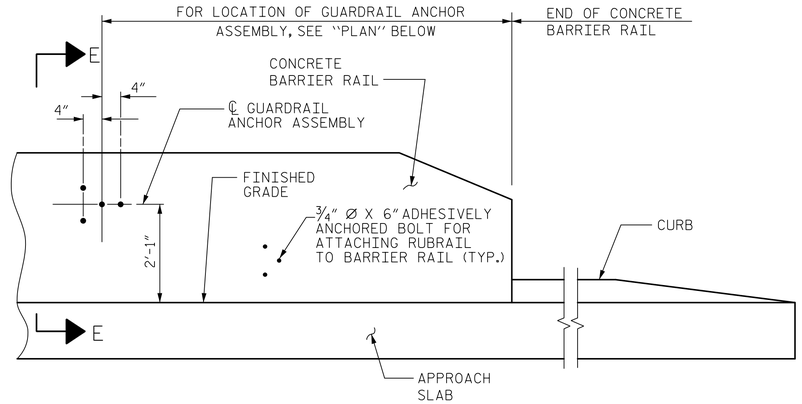


ELEVATION

## NOTES

THE GUARDRAIL ANCHOR ASSEMBLY SHALL CONSIST OF A 1/4" HOLD-DOWN PLATE AND 4 - 7/8" Ø BOLTS WITH NUTS AND WASHERS, RUBRAIL, AND ADHESIVELY ANCHORED BOLTS.

THE HOLD-DOWN PLATE SHALL CONFORM TO AASHTO M270 GRADE 36. AFTER FABRICATION, THE HOLD-DOWN PLATE SHALL BE HOT-DIP GALVANIZED IN ACCORDANCE WITH AASHTO M111.

BOLTS SHALL CONFORM TO THE REQUIREMENTS OF ASTM A307 AND NUTS SHALL CONFORM TO THE REQUIREMENTS OF AASHTO M291. BOLTS, NUTS AND WASHERS SHALL BE GALVANIZED. (AT THE CONTRACTOR'S OPTION, STAINLESS STEEL BOLTS, NUTS AND WASHERS MAY BE USED AS AN ALTERNATE FOR THE 7/8" Ø GALVANIZED BOLTS, NUTS AND WASHERS. THEY SHALL CONFORM TO OR EXCEED THE MECHANICAL REQUIREMENTS OF ASTM A307. THE USE OF THIS ALTERNATE SHALL BE APPROVED BY THE ENGINEER.)

THE GUARDRAIL ANCHOR ASSEMBLY IS REQUIRED AT ALL POINTS WHERE APPROACH GUARDRAIL IS TO BE ATTACHED TO THE END OF BARRIER RAIL. FOR POINTS OF ATTACHMENT, SEE SKETCH.

AFTER INSTALLATION, THE EXPOSED THREAD OF THE BOLT SHALL BE BURRED WITH A SHARP POINTED TOOL.

THE COST OF THE GUARDRAIL ANCHOR ASSEMBLY SHALL BE INCLUDED IN THE UNIT CONTRACT PRICE BID FOR CONCRETE BARRIER RAIL.

THE 1 1/4" Ø HOLES SHALL BE FORMED OR DRILLED WITH A CORE BIT. IMPACT TOOLS WILL NOT BE PERMITTED. ANY CONCRETE DAMAGED BY THIS WORK SHALL BE REPAIRED TO THE SATISFACTION OF THE ENGINEER.

THE C6 X 8.2 RUBRAIL IS TO BE ADHESIVELY ANCHORED TO THE RAIL USING THREE 3/4" Ø X 6" BOLTS WITH WASHERS. LEVEL ONE FIELD TESTING IS REQUIRED, AND THE YIELD LOAD OF THE 3/4" Ø BOLT IS 12 KIPS. FOR ADHESIVELY ANCHORED ANCHOR BOLTS OR DOWELS, SEE STANDARD SPECIFICATIONS. SEE ROADWAY STANDARD 862.03 FOR DETAILS AND LOCATION OF THE RUBRAIL.

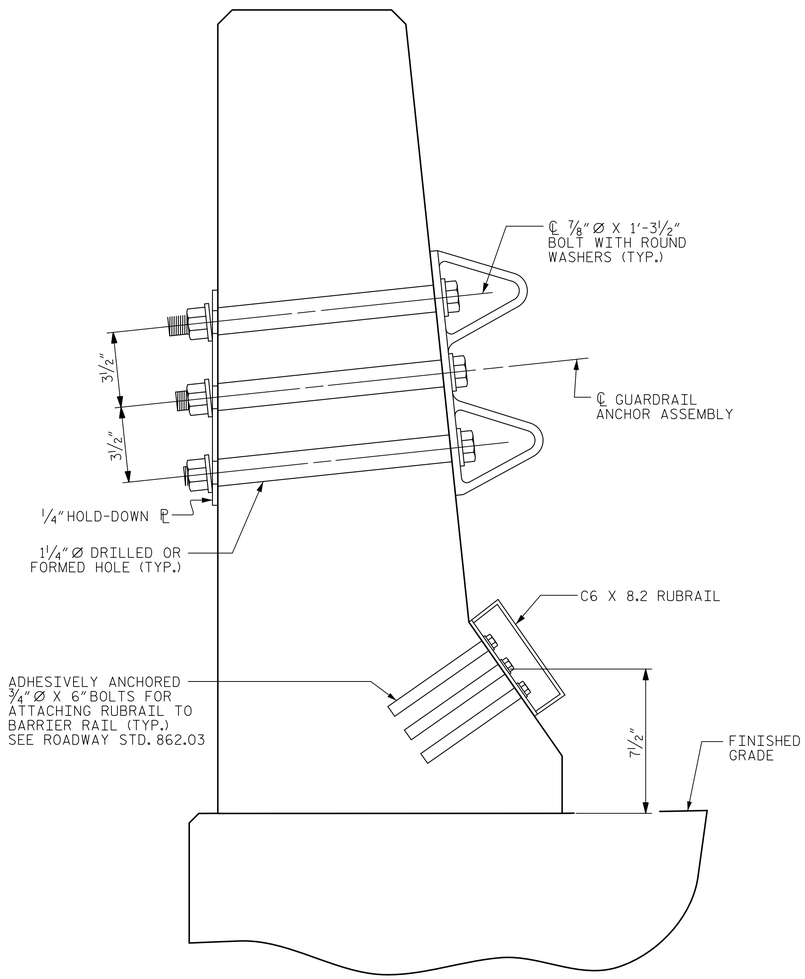


SECTION E-E

## GUARDRAIL ANCHOR ASSEMBLY DETAILS

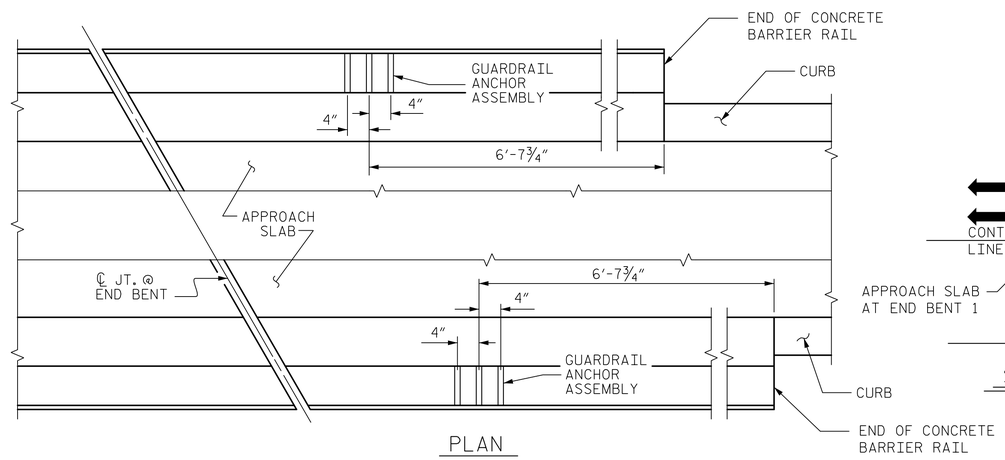


PLAN

## LOCATION OF ANCHORS FOR GUARDRAIL

END BENT 2 SHOWN, END BENT 1 SIMILAR.

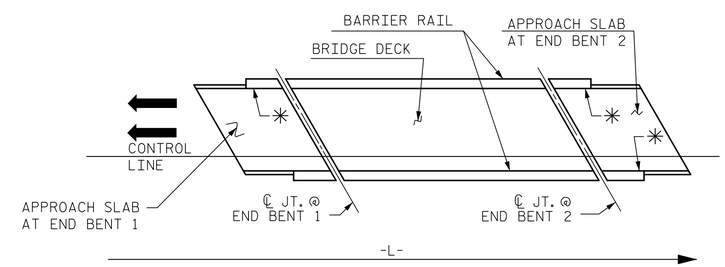


SKETCH SHOWING POINTS OF ATTACHMENTS

✳ DENOTES GUARDRAIL ANCHOR ASSEMBLY

PROJECT NO. R-1015

CRAVEN COUNTY

STATION: POC STA. 138+31.09 -L-

DocuSigned by: James P. Gregg
B8DFE024AB9C404...

NORTH CAROLINA PROFESSIONAL SEAL 046632 ENGINEER JAMES P. GREGG

11/20/2018

STATE OF NORTH CAROLINA
DEPARTMENT OF TRANSPORTATION
RALEIGH

STANDARD

GUARDRAIL ANCHORAGE FOR BARRIER RAIL

LEFT LANE

| ASSEMBLED BY : A. Smith | DATE : 7/18 |
|---|---|
| CHECKED BY : E. Jowza | DATE : 10/18 |

| DRAWN BY : TLA 5/06 | REV. 7/12 | MAA/GM |
|---|---|---|
| CHECKED BY : GM 5/06 | REV. 6/13 | MAA/GM |
| | REV. 12/17 | MAA/THC |

DOCUMENT NOT CONSIDERED FINAL UNLESS ALL SIGNATURES COMPLETED

HNTB NORTH CAROLINA, P.C.
NC License No. C-1554
343 E. Six Forks Rd., Suite 200, Raleigh, N.C. 27609

| DRAWN BY | A. SMITH | DATE | 7/18 |
|---|---|---|---|
| CHECKED BY | E. JOWZA | DATE | 10/18 |
| DESIGN ENGINEER OF RECORD | J. GREGG | DATE | 10/18 |

DWG. NO. 24

| REVISIONS | | | | | | SHEET NO. |
|---|---|---|---|---|---|---|
| NO. | BY | DATE | NO. | BY | DATE | S03-24 |
| 1 | | | 3 | | | TOTAL SHEETS |
| 2 | | | 4 | | | 46 |

STD. NO. GRA2

DocuSign Envelope ID: 609DC734-B6DC-4B94-B1D1-420DCB5CA916

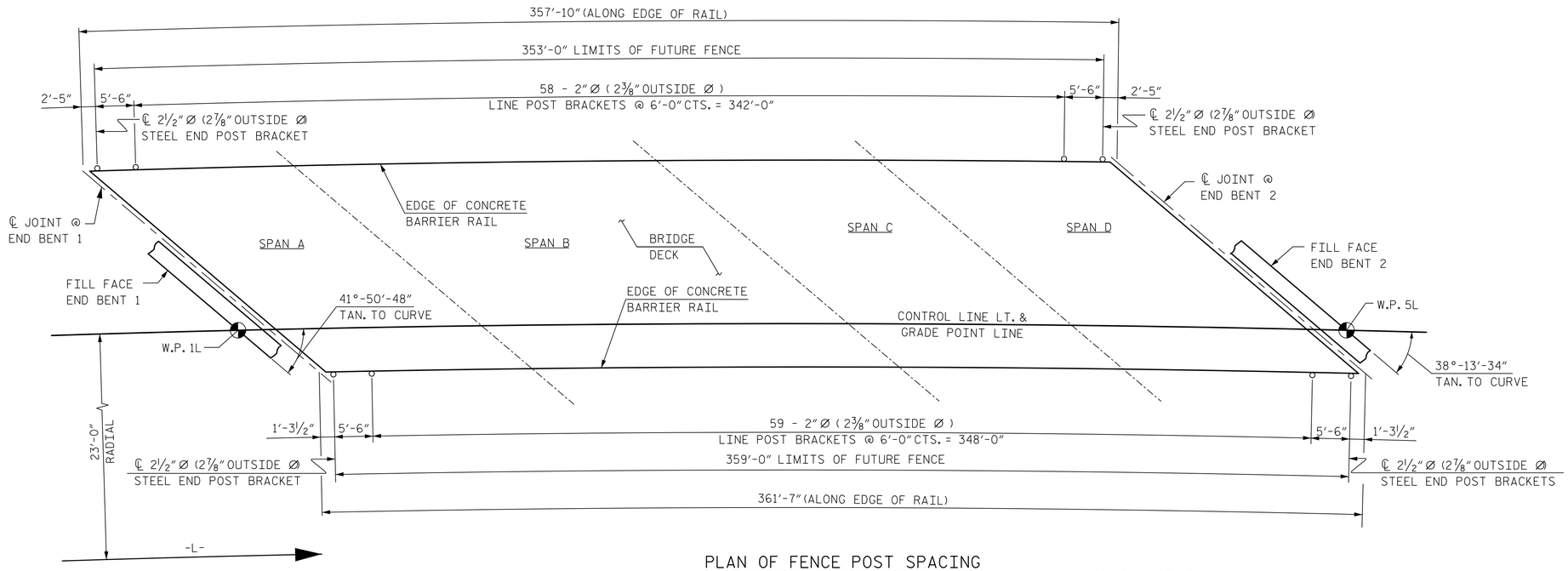


PLAN OF FENCE POST SPACING

(PAY LENGTH 712.00 FEET)

NOTE: EDGE OF SLAB NOT SHOWN FOR CLARITY.

## NOTES

MATERIAL FOR ANCHOR BOLTS SHALL BE TYPE 304 STAINLESS STEEL WITH A MINIMUM 9000 PSI ULTIMATE STRENGTH. NUTS AND WASHERS SHALL BE TYPE 304 STAINLESS STEEL. ANCHOR BOLTS SHALL BE EMBEDDED AS PER ADHESIVE BONDING SYSTEM MANUFACTURER SPECIFICATIONS. NUTS SHALL BE AMERICAN STANDARD FINISHED HEXAGON THICK NUTS, CLASS 2B THREADS.

FOR SETTING ANCHOR BOLTS, THE CONTRACTOR SHALL USE AN ADHESIVE BONDING SYSTEM. SEE THE REQUIREMENTS OF SECTION 420-13 OF THE STANDARD SPECIFICATIONS FOR ADHESIVELY ANCHORED ANCHOR BOLTS OR DOWELS. LEVEL ONE FIELD TESTING OF BONDING SYSTEM IS REQUIRED AND THE YIELD LOAD OF THE ¾"Ø BOLTS IS 12.0 KIPS.

ALL BRACKETS SHALL MEET THE REQUIREMENTS OF SECTION 1050 OF THE STANDARD SPECIFICATIONS, GALVANIZE ALL STEEL PARTS AND HARDWARE IN ACCORDANCE WITH ARTICLE 1076 OF THE STANDARD SPECIFICATIONS.

FENCE POST LOCATIONS SHALL BE SHIFTED, AS NECESSARY, TO MAINTAIN 12" MINIMUM DISTANCE FROM ANCHOR BOLT TO JOINTS IN BARRIER RAIL.

DIMENSIONS ARE SHOWN ALONG OUTSIDE FACE OF BARRIER RAIL.

BRACKETS SHALL BE INSTALLED TO PERMIT STANDARD CHAIN LINK FENCE DETAILS TO BE UTILIZED IN THE FUTURE.

ALL THE COSTS ASSOCIATED WITH THE MATERIALS AND INSTALLATION OF THE POST BRACKETS SHALL BE INCLUDED IN THE "CONCRETE BARRIER RAIL" PAY ITEM.

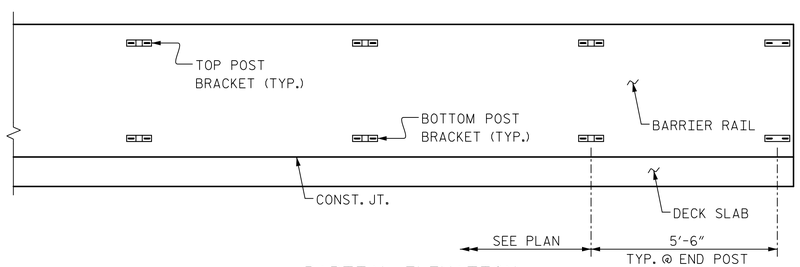


PARTIAL ELEVATION

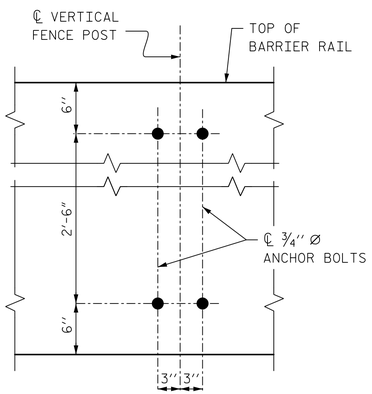


BOLT SETTING DETAIL

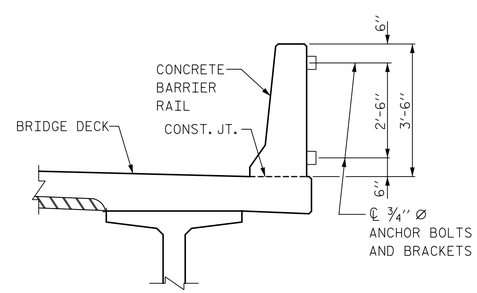


SECTION THRU FENCE

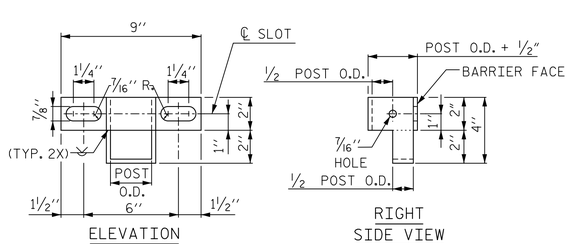


ELEVATION

RIGHT SIDE VIEW

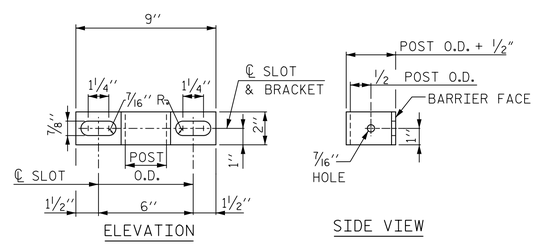


ELEVATION

SIDE VIEW

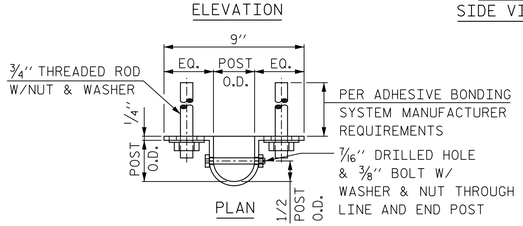


BOTTOM POST BRACKET

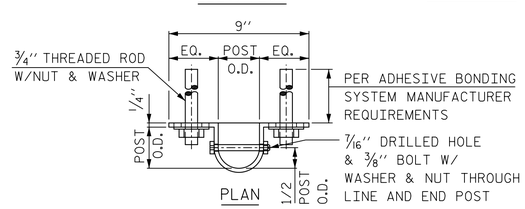


TOP POST BRACKET

PROJECT NO. R-1015

CRAVEN COUNTY

STATION: POC STA. 138+31.09 -L-

DocuSigned by: James P. Gregg

NORTH CAROLINA PROFESSIONAL SEAL 046632 ENGINEER JAMES P. GREGG

12/6/2018

**DOCUMENT NOT CONSIDERED FINAL UNLESS ALL SIGNATURES COMPLETED**

HNTB

HNTB NORTH CAROLINA, P.C.
NC License No. C-1554
343 E. Six Forks Rd., Suite 200, Raleigh, N.C. 27609

DRAWN BY A. SMITH DATE 7/18
CHECKED BY E. JOWZA DATE 10/18
DESIGN ENGINEER OF RECORD J. GREGG DATE 10/18

DWG. NO. 25

STATE OF NORTH CAROLINA
DEPARTMENT OF TRANSPORTATION
RALEIGH

SUPERSTRUCTURE

BRIDGE MOUNTED CHAIN LINK FENCE DETAILS

LEFT LANE

| REVISIONS | | | | | | SHEET NO. |
|---|---|---|---|---|---|---|
| NO. | BY | DATE | NO. | BY | DATE | S03-25 |
| 1 | | | 3 | | | TOTAL SHEETS |
| 2 | | | 4 | | | 46 |

DocuSign Envelope ID: 609DC734-B6DC-4B94-B1D1-420DCB5CA916

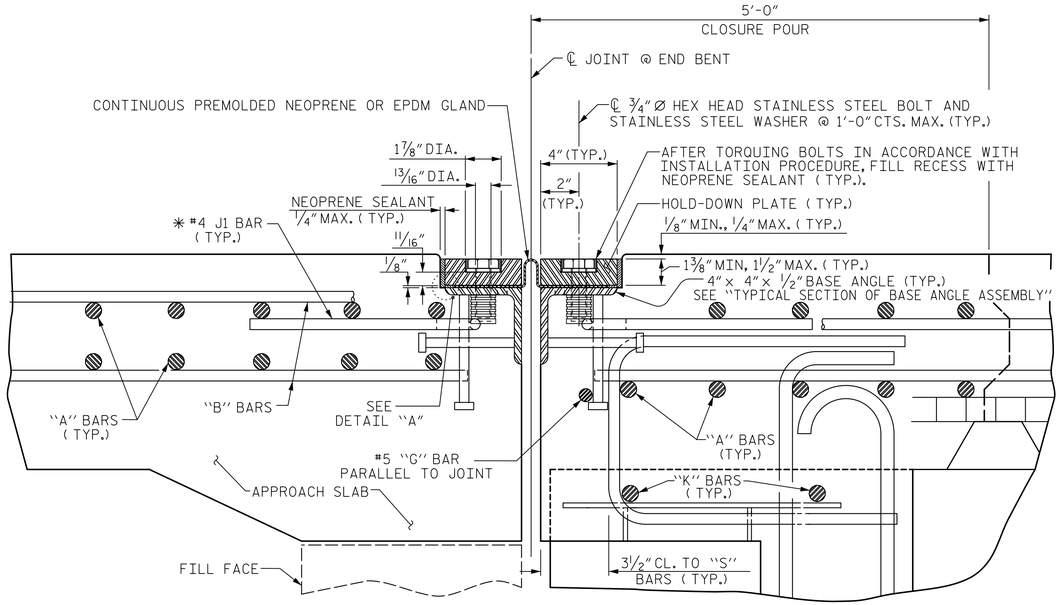


# EXPANSION JOINT DETAILS

SECTION NORMAL TO JOINT -- PRESTRESSED GIRDER SUPERSTRUCTURE

✳ THE QUANTITY OF #4 J1 BARS ON THE BILL OF MATERIAL IS BASED ON 1'-0" CENTERS. J1 BARS SHALL BE PLACED AT EACH VERTICAL STUD ANCHOR BOLT. IN THE EVENT THAT THE NUMBER OF VERTICAL STUD ANCHORS EXCEEDS THE NUMBER OF J1 BARS SPECIFIED, ADDITIONAL J1 BARS WILL NOT BE REQUIRED.

## INSTALLATION PROCEDURE

1. A TEMPLATE OR OTHER SUITABLE DEVICE SHALL BE USED TO FORM THE TOP OF THE EXPANSION JOINT SEAL BLOCKOUT TO THE PROPER DEPTH AND WIDTH. THE TEMPLATE SHALL BE 4⅛" TO 4¼" WIDE AND OF SUCH THICKNESS AS TO PROVIDE FOR CORRECT FINAL ELEVATION OF TOP OF HOLD-DOWN PLATES. THE TEMPLATE SHALL BE ATTACHED TO THE BASE ANGLE ASSEMBLY WITH THE ¾"Ø HEX HEAD BOLTS PROVIDED FOR THE HOLD-DOWN PLATES. A 1"Ø HOLE SHALL BE PROVIDED IN THE TEMPLATE CENTERED OVER EACH WEEP HOLE IN THE 4" X 4" X ½" BASE ANGLE. OTHER METHODS OF INSURING DRAINAGE THROUGH WEEP HOLES MAY BE EMPLOYED SUBJECT TO ENGINEER'S APPROVAL.
2. AFTER THE CONCRETE HAS BEEN CAST ON BOTH SIDES OF THE JOINT, REMOVE THE TEMPLATE. THOROUGHLY CLEAN THE BOLT HOLES AND THE ANGLE PLATE. REMOVE ANY EXCESS CONCRETE THAT COMES OUT OF THE WEEP HOLES. ANY DAMAGED STEEL SHALL BE REPAIRED IN ACCORDANCE WITH THE SPECIAL PROVISION FOR THERMAL SPRAYED COATINGS (METALLIZATION).
3. LAY THE GLAND ON THE BASE ANGLE AND FIELD MARK THE GLAND FOR THE BOLT HOLES. HOLES IN THE GLAND SHALL BE PUNCHED ⅞" IN DIAMETER WITH A HAND PUNCH.
4. IN ORDER TO CHECK FOR PROPER ALIGNMENT, PLACE THE GLAND AND HOLD-DOWN PLATES ON THE BASE ANGLE. DO NOT APPLY NEOPRENE SEALANT. BOLT THE HOLD-DOWN PLATES TO THE BASE ANGLE BUT DO NOT TIGHTEN. THE ENGINEER SHALL INSPECT THE JOINT SEAL DEVICE FOR PROPER ALIGNMENT.
5. AFTER INSPECTION, REMOVE THE HOLD-DOWN PLATES AND GLAND. APPLY NEOPRENE SEALANT TO THE BASE ANGLE IN ACCORDANCE WITH THE "INSTALLATION SKETCH". PLACE GLAND AND HOLD-DOWN PLATES ON THE BASE ANGLE. BOLT THE HOLD-DOWN PLATES TO THE BASE ANGLE ASSEMBLY AND TORQUE THE BOLTS TO 88 FT-LBS WITH A TORQUE WRENCH. CHECK THE TORQUE AFTER THREE (3) HOURS AND, IF NECESSARY, RETIGHTEN TO 88 FT-LBS. A FINAL CHECK SHALL BE MADE AT SEVEN (7) DAYS. TORQUE SHALL NOT BE LESS THAN 80 FT-LBS AFTER SEVEN (7) DAYS.
6. AFTER PROPER TORQUING, CLEAN THE BOLT HOLE RECESSES, THE RECESS BETWEEN THE JOINT SEAL DEVICE AND CONCRETE, AND THE LIFTING HOLES IN THE HOLD-DOWN PLATE, AND COMPLETELY FILL THESE RECESSES AND LIFTING HOLES WITH NEOPRENE SEALANT.

## GENERAL NOTES

1. FOR EXPANSION JOINT SEALS, SEE SPECIAL PROVISIONS.
2. ALL PLATES AND ANGLES SHALL CONFORM TO AASHTO M270 GRADE 36 STEEL OR APPROVED EQUAL. ALL HOLD-DOWN BOLTS SHALL CONFORM TO ASTM F593 ALLOY 304 STAINLESS STEEL AND WASHERS SHALL CONFORM TO ASTM F844 EXCEPT THEY SHALL BE MADE FROM ALLOY 304 STAINLESS STEEL. ALL STUD ANCHORS SHALL CONFORM TO AASHTO M169, GRADES 1010 THRU 1020 OR APPROVED EQUAL. ALL CONCRETE INSERTS SHALL BE CLOSED END AND SHALL CONFORM TO AASHTO M169, GRADE 12L14. TENSILE CAPACITY SHALL BE 3000 LBS. MINIMUM.
3. FOR JOINTS SKEWED LESS THAN 50° OR MORE THAN 130°, ONLY A CORRUGATED GLAND SHALL BE USED.
4. CLOSED END FERRULES AND STUD ANCHORS SHALL BE SHOP WELDED AND ALL HOLES SHALL BE SHOP DRILLED AS SHOWN ON PLANS. STUD ANCHORS SHALL BE ELECTRIC ARC END WELDED WITH COMPLETE FUSION.
5. SURFACES COMING IN CONTACT WITH NEOPRENE SHALL BE GROUND SMOOTH PRIOR TO METALLIZING.
6. UPON COMPLETION OF SHOP FABRICATION, THE HOLD-DOWN PLATE AND BASE ANGLE ASSEMBLY, AS SHOWN IN THE "TYPICAL SECTION OF BASE ANGLE ASSEMBLY", SHALL BE METALLIZED IN ACCORDANCE WITH THE STANDARD SPECIFICATIONS. FOR THERMAL SPRAYED COATINGS (METALLIZATION), SEE SPECIAL PROVISIONS.
7. THE COVER PLATES SHALL BE METALLIZED IN ACCORDANCE WITH THE STANDARD SPECIFICATIONS. FOR THERMAL SPRAYED COATINGS (METALLIZATION), SEE SPECIAL PROVISIONS.
8. BASE ANGLE ASSEMBLY SHALL BE CONTINUOUS FOR THE LENGTH OF THE JOINT. FINISHED WELD SHALL BE GROUND SMOOTH AND REPAIRED IN ACCORDANCE WITH THE SPECIAL PROVISION FOR THERMAL SPRAYED COATINGS (METALLIZATION).
9. FIELD SPLICES OF HOLD-DOWN PLATES SHALL BE KEPT TO A MINIMUM. CONTRACTOR SHALL FURNISH DETAILED PLANS SHOWING PROPOSED SPLICE LOCATIONS FOR APPROVAL. HOLD-DOWN PLATES SHALL NOT EXCEED 20' LENGTHS UNLESS APPROVED BY THE ENGINEER.
10. NO ALTERNATE JOINT DETAILS SHALL BE PERMITTED IN LIEU OF THOSE SHOWN ON THESE PLANS.
11. THE CONTRACTOR MAY, AT HIS OPTION, USE ADHESIVELY ANCHORED ANCHOR BOLTS IN PLACE OF CONCRETE INSERTS FOR COVER PLATES. THE YIELD LOAD OF THE ¾"Ø BOLT IS 10 KIPS. FIELD TESTING OF THE ADHESIVE BONDING SYSTEM IS NOT REQUIRED.
12. THE FABRICATOR SHALL PROVIDE ½"Ø THREADED HOLES IN THE HOLD-DOWN PLATES TO ASSIST IN LIFTING AND PLACING. THE HOLES SHALL BE ¾" DEEP AT 6'-0" MAXIMUM SPACING AND A MINIMUM OF TWO HOLES PER PLATE.

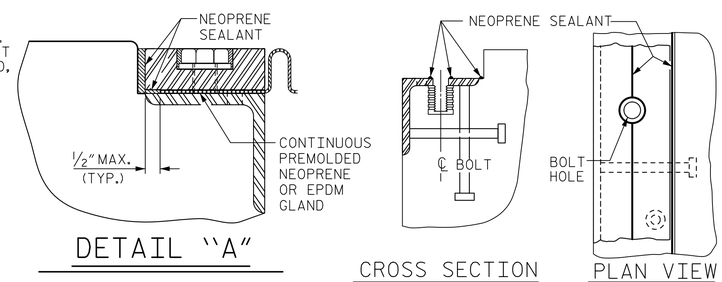


INSTALLATION SKETCH

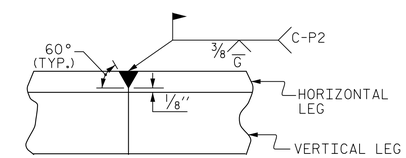


DETAIL- FIELD WELD SPLICE OF BASE ANGLE

| MOVEMENT AND SETTING AT JOINT | | | | | |
|---|---|---|---|---|---|
| END BENT NO. | SKEW ANGLE | TOTAL MOVEMENT (ALONG ℄ RDWY) | PERPENDICULAR JOINT OPENING AT 45° F | PERPENDICULAR JOINT OPENING AT 60° F | PERPENDICULAR JOINT OPENING AT 90° F |
| 1 | 41°-50'-48" TAN. TO CURVE | 1⅛" | 1½" | 1⅜" | 1⅛" |
| 2 | 38°-13'-34" TAN. TO CURVE | 1 1/16" | 1 7/16" | 1 5/16" | 1⅛" |

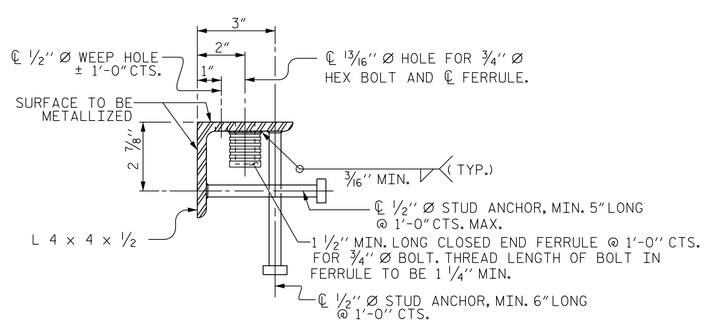


TYPICAL SECTION OF BASE ANGLE ASSEMBLY

PROJECT NO. R-1015

CRAVEN COUNTY

STATION: POC STA. 138+31.09 -L-

SHEET 1 OF 2

STATE OF NORTH CAROLINA
DEPARTMENT OF TRANSPORTATION
RALEIGH

STANDARD

EXPANSION JOINT SEAL DETAILS

LEFT LANE

DocuSigned by: James P. Gregg

NORTH CAROLINA PROFESSIONAL SEAL 046632 ENGINEER JAMES P. GREGG

12/6/2018

| ASSEMBLED BY : A. SMITH | DATE : 7/18 |
|---|---|
| CHECKED BY : E. JOWZA | DATE : 10/18 |

| DRAWN BY : REK 9/87 | REV. 10/1/11 MAA/GM |
|---|---|
| CHECKED BY : CRK 10/87 | REV. 10/17 MAA/THC |
| | REV. 6/18 MAA/THC |

**DOCUMENT NOT CONSIDERED FINAL UNLESS ALL SIGNATURES COMPLETED**

HNTB NORTH CAROLINA, P.C.
NC License No. C-1554
343 E. Six Forks Rd., Suite 200, Raleigh, N.C. 27609

DRAWN BY A. SMITH DATE 7/18
CHECKED BY E. JOWZA DATE 10/18
DESIGN ENGINEER OF RECORD J. GREGG DATE 10/18

DWG. NO. 26

| REVISIONS | | | | | | SHEET NO. |
|---|---|---|---|---|---|---|
| NO. | BY | DATE | NO. | BY | DATE | S03-26 |
| 1 | | | 3 | | | TOTAL SHEETS |
| 2 | | | 4 | | | 46 |

STD. NO. EJS1

DocuSign Envelope ID: 5B67B2BB-4DD6-4E6E-81A0-C0FE3C5CF566

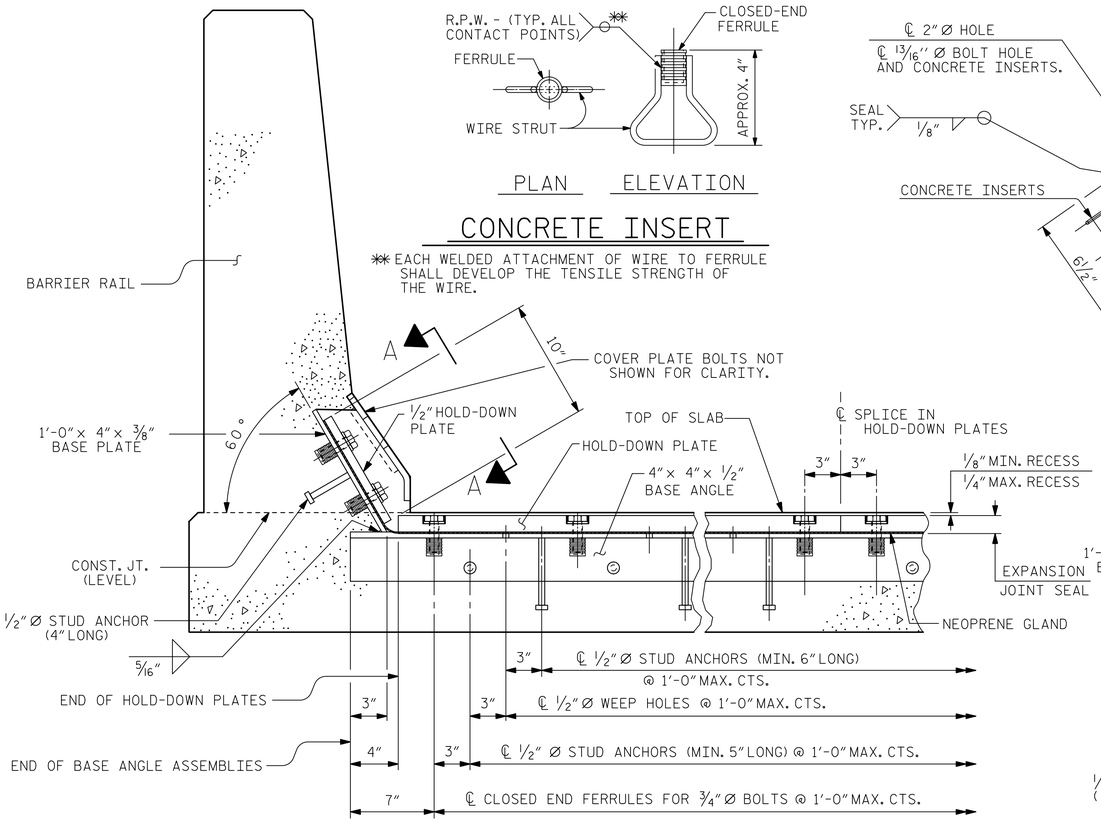


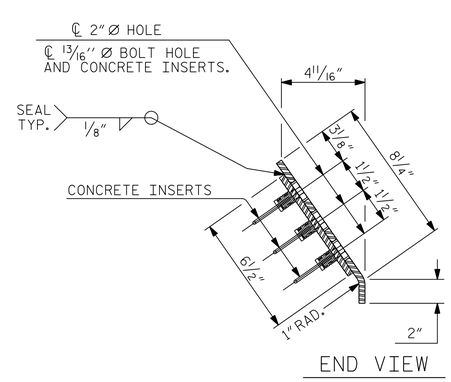


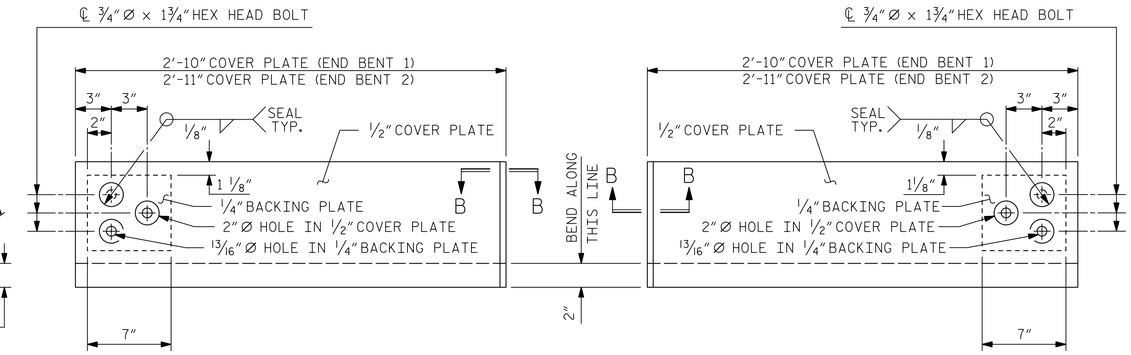


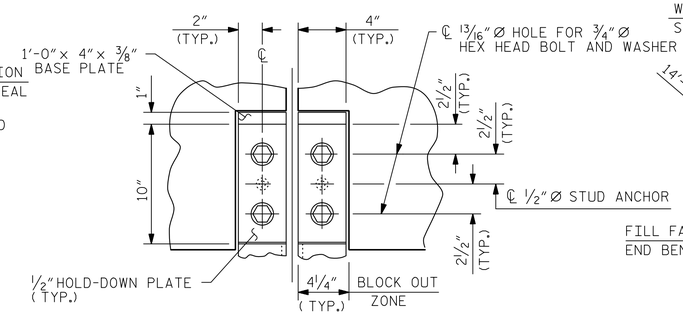


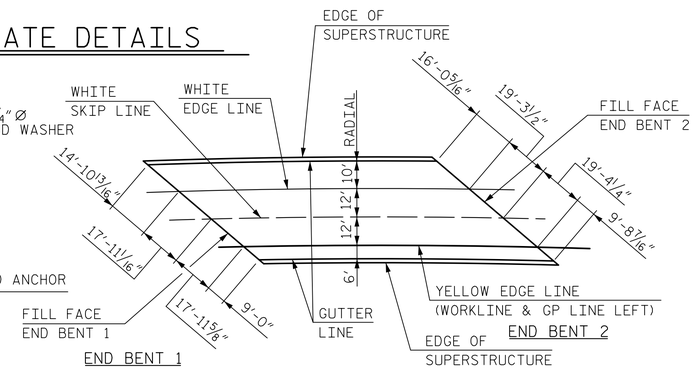


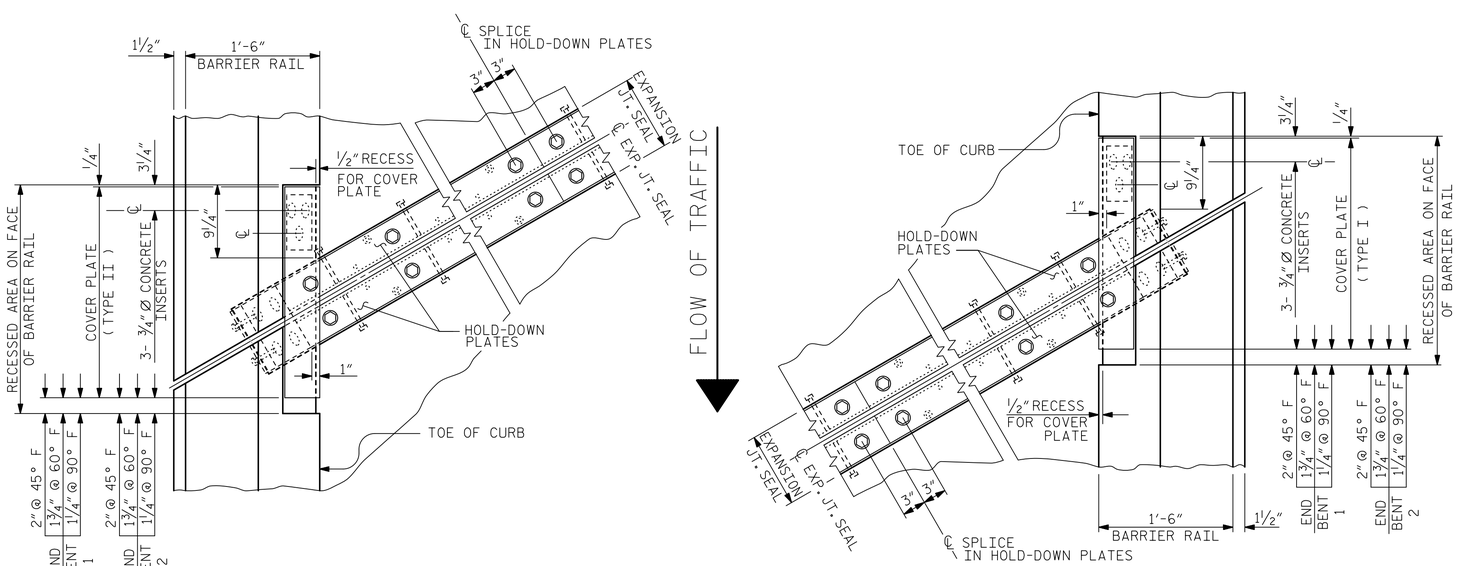


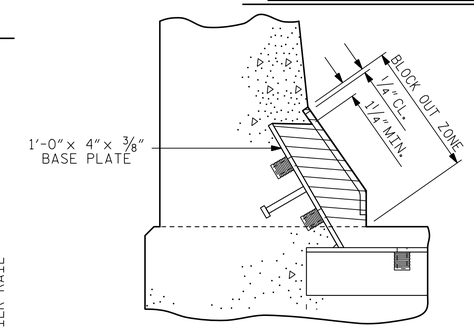


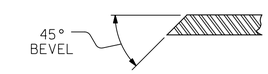


PROJECT NO. R-1015

CRAVEN COUNTY

STATION: POC STA. 138+31.09 -L-

SHEET 2 OF 2

STATE OF NORTH CAROLINA
DEPARTMENT OF TRANSPORTATION
RALEIGH

STANDARD

EXPANSION JOINT SEAL DETAILS FOR BARRIER RAIL

LEFT LANE

DocuSigned by: James P. Gregg
NORTH CAROLINA PROFESSIONAL SEAL 046632 ENGINEER JAMES P. GREGG
11/20/2018

| | | | |
|---|---|---|---|
| ASSEMBLED BY : A. SMITH | | DATE : 7/18 | |
| CHECKED BY : E. JOWZA | | DATE : 10/18 | |
| DRAWN BY : REK | 9/87 | REV. 7/12 | MAA/GM |
| CHECKED BY : CRK | 10/87 | REV. 6/13 | MAA/GM |
| | | REV. 12/17 | MAA/THC |

DOCUMENT NOT CONSIDERED FINAL UNLESS ALL SIGNATURES COMPLETED

HNTB NORTH CAROLINA, P.C.
NC License No. C-1554
343 E. Six Forks Rd., Suite 200, Raleigh, N.C. 27609

DRAWN BY A. SMITH DATE 7/18
CHECKED BY E. JOWZA DATE 10/18
DESIGN ENGINEER OF RECORD J. GREGG DATE 10/18

DWG. NO. 27

| REVISIONS | | | | | | SHEET NO. |
|---|---|---|---|---|---|---|
| NO. | BY | DATE | NO. | BY | DATE | S03-27 |
| 1 | | | 3 | | | TOTAL SHEETS |
| 2 | | | 4 | | | 46 |

STD. NO. EJS2

DocuSign Envelope ID: 609DC734-B6DC-4B94-B1D1-420DCB5CA916

## BILL OF MATERIAL

EPOXY COATED REINFORCING STEEL

| BAR | NO. | SIZE | TYPE | LENGTH | WEIGHT (LBS.) |
|---|---|---|---|---|---|
| ✳ A1 | 616 | 6 | STR | 42′-11″ | 39,708 |
| ✳ A2 | 1 | 6 | STR | 42′-8″ | 64 |
| ✳ A3 | 1 | 6 | STR | 42′-2″ | 63 |
| ✳ A4 | 1 | 6 | STR | 41′-9″ | 63 |
| ✳ A5 | 1 | 6 | STR | 41′-4″ | 62 |
| ✳ A6 | 1 | 6 | STR | 40′-11″ | 61 |
| ✳ A7 | 1 | 6 | STR | 40′-5″ | 61 |
| ✳ A8 | 1 | 6 | STR | 40′-0″ | 60 |
| ✳ A9 | 1 | 6 | STR | 39′-7″ | 59 |
| ✳ A10 | 1 | 6 | STR | 39′-2″ | 59 |
| ✳ A11 | 1 | 6 | STR | 38′-8″ | 58 |
| ✳ A12 | 1 | 6 | STR | 38′-3″ | 57 |
| ✳ A13 | 1 | 6 | STR | 37′-10″ | 57 |
| ✳ A14 | 1 | 6 | STR | 37′-5″ | 56 |
| ✳ A15 | 1 | 6 | STR | 36′-11″ | 55 |
| ✳ A16 | 1 | 6 | STR | 36′-6″ | 55 |
| ✳ A17 | 1 | 6 | STR | 36′-1″ | 54 |
| ✳ A18 | 1 | 6 | STR | 35′-8″ | 54 |
| ✳ A19 | 1 | 6 | STR | 35′-2″ | 53 |
| ✳ A20 | 1 | 6 | STR | 34′-9″ | 52 |
| ✳ A21 | 1 | 6 | STR | 34′-4″ | 52 |
| ✳ A22 | 1 | 6 | STR | 33′-11″ | 51 |
| ✳ A23 | 1 | 6 | STR | 33′-5″ | 50 |
| ✳ A24 | 1 | 6 | STR | 33′-0″ | 50 |
| ✳ A25 | 1 | 6 | STR | 32′-7″ | 49 |
| ✳ A26 | 1 | 6 | STR | 32′-2″ | 48 |
| ✳ A27 | 1 | 6 | STR | 31′-9″ | 48 |
| ✳ A28 | 1 | 6 | STR | 31′-3″ | 47 |
| ✳ A29 | 1 | 6 | STR | 30′-10″ | 46 |
| ✳ A30 | 1 | 6 | STR | 30′-5″ | 46 |
| ✳ A31 | 1 | 6 | STR | 30′-0″ | 45 |
| ✳ A32 | 1 | 6 | STR | 29′-6″ | 44 |
| ✳ A33 | 1 | 6 | STR | 29′-1″ | 44 |
| ✳ A34 | 1 | 6 | STR | 28′-8″ | 43 |
| ✳ A35 | 1 | 6 | STR | 28′-3″ | 42 |
| ✳ A36 | 1 | 6 | STR | 27′-9″ | 42 |
| ✳ A37 | 1 | 6 | STR | 27′-4″ | 41 |
| ✳ A38 | 1 | 6 | STR | 26′-11″ | 40 |
| ✳ A39 | 1 | 6 | STR | 26′-6″ | 40 |
| ✳ A40 | 1 | 6 | STR | 26′-0″ | 39 |
| ✳ A41 | 1 | 6 | STR | 25′-7″ | 38 |
| ✳ A42 | 1 | 6 | STR | 25′-2″ | 38 |
| ✳ A43 | 1 | 6 | STR | 24′-9″ | 37 |
| ✳ A44 | 1 | 6 | STR | 24′-3″ | 36 |
| ✳ A45 | 1 | 6 | STR | 23′-10″ | 36 |
| ✳ A46 | 1 | 6 | STR | 23′-5″ | 35 |
| ✳ A47 | 1 | 6 | STR | 23′-0″ | 35 |
| ✳ A48 | 1 | 6 | STR | 22′-6″ | 34 |
| ✳ A49 | 1 | 6 | STR | 22′-1″ | 33 |
| ✳ A50 | 1 | 6 | STR | 21′-8″ | 33 |
| ✳ A51 | 1 | 6 | STR | 21′-3″ | 32 |
| ✳ A52 | 1 | 6 | STR | 20′-10″ | 31 |
| ✳ A53 | 1 | 6 | STR | 20′-4″ | 31 |
| ✳ A54 | 1 | 6 | STR | 19′-11″ | 30 |
| ✳ A55 | 1 | 6 | STR | 19′-6″ | 29 |
| ✳ A56 | 1 | 6 | STR | 19′-1″ | 29 |
| ✳ A57 | 1 | 6 | STR | 18′-7″ | 28 |
| ✳ A58 | 1 | 6 | STR | 18′-2″ | 27 |
| ✳ A59 | 1 | 6 | STR | 17′-9″ | 27 |
| ✳ A60 | 1 | 6 | STR | 17′-4″ | 26 |
| ✳ A61 | 1 | 6 | STR | 16′-10″ | 25 |
| ✳ A62 | 1 | 6 | STR | 16′-5″ | 25 |
| ✳ A63 | 1 | 6 | STR | 16′-0″ | 24 |
| ✳ A64 | 1 | 6 | STR | 15′-7″ | 23 |
| ✳ A65 | 1 | 6 | STR | 15′-1″ | 23 |
| ✳ A66 | 1 | 6 | STR | 14′-8″ | 22 |
| ✳ A67 | 1 | 6 | STR | 14′-3″ | 21 |
| ✳ A68 | 1 | 6 | STR | 13′-10″ | 21 |
| ✳ A69 | 1 | 6 | STR | 13′-4″ | 20 |
| ✳ A70 | 1 | 6 | STR | 12′-11″ | 19 |
| ✳ A71 | 1 | 6 | STR | 12′-6″ | 19 |
| ✳ A72 | 1 | 6 | STR | 12′-1″ | 18 |
| ✳ A73 | 1 | 6 | STR | 11′-8″ | 18 |

## BILL OF MATERIAL

EPOXY COATED REINFORCING STEEL

| BAR | NO. | SIZE | TYPE | LENGTH | WEIGHT (LBS.) |
|---|---|---|---|---|---|
| ✳ A74 | 1 | 6 | STR | 11′-2″ | 17 |
| ✳ A75 | 1 | 6 | STR | 10′-9″ | 16 |
| ✳ A76 | 1 | 6 | STR | 10′-4″ | 16 |
| ✳ A77 | 1 | 6 | STR | 9′-11″ | 15 |
| ✳ A78 | 1 | 6 | STR | 9′-5″ | 14 |
| ✳ A79 | 1 | 6 | STR | 9′-0″ | 14 |
| ✳ A80 | 1 | 6 | STR | 8′-7″ | 13 |
| ✳ A81 | 1 | 6 | STR | 8′-2″ | 12 |
| ✳ A82 | 1 | 6 | STR | 7′-8″ | 12 |
| ✳ A83 | 1 | 6 | STR | 7′-3″ | 11 |
| ✳ A84 | 1 | 6 | STR | 6′-10″ | 10 |
| ✳ A85 | 1 | 6 | STR | 6′-5″ | 10 |
| ✳ A86 | 1 | 6 | STR | 5′-11″ | 9 |
| ✳ A87 | 1 | 6 | STR | 5′-6″ | 8 |
| ✳ A88 | 1 | 6 | STR | 5′-1″ | 8 |
| ✳ A89 | 1 | 6 | STR | 4′-8″ | 7 |
| ✳ A90 | 1 | 6 | STR | 4′-2″ | 6 |
| ✳ A91 | 1 | 6 | STR | 3′-9″ | 6 |
| ✳ A92 | 1 | 6 | STR | 3′-4″ | 5 |
| ✳ A93 | 1 | 6 | STR | 2′-11″ | 4 |
| ✳ A94 | 1 | 6 | STR | 2′-6″ | 4 |
| ✳ A95 | 1 | 6 | STR | 42′-8″ | 64 |
| ✳ A96 | 1 | 6 | STR | 42′-3″ | 63 |
| ✳ A97 | 1 | 6 | STR | 41′-10″ | 63 |
| ✳ A98 | 1 | 6 | STR | 41′-5″ | 62 |
| ✳ A99 | 1 | 6 | STR | 41′-0″ | 62 |
| ✳ A100 | 1 | 6 | STR | 40′-7″ | 61 |
| ✳ A101 | 1 | 6 | STR | 40′-2″ | 60 |
| ✳ A102 | 1 | 6 | STR | 39′-9″ | 60 |
| ✳ A103 | 1 | 6 | STR | 39′-5″ | 59 |
| ✳ A104 | 1 | 6 | STR | 39′-0″ | 59 |
| ✳ A105 | 1 | 6 | STR | 38′-7″ | 58 |
| ✳ A106 | 1 | 6 | STR | 38′-2″ | 57 |
| ✳ A107 | 1 | 6 | STR | 37′-9″ | 57 |
| ✳ A108 | 1 | 6 | STR | 37′-4″ | 56 |
| ✳ A109 | 1 | 6 | STR | 36′-11″ | 55 |
| ✳ A110 | 1 | 6 | STR | 36′-6″ | 55 |
| ✳ A111 | 1 | 6 | STR | 36′-2″ | 54 |
| ✳ A112 | 1 | 6 | STR | 35′-9″ | 54 |
| ✳ A113 | 1 | 6 | STR | 35′-4″ | 53 |
| ✳ A114 | 1 | 6 | STR | 34′-11″ | 52 |
| ✳ A115 | 1 | 6 | STR | 34′-6″ | 52 |
| ✳ A116 | 1 | 6 | STR | 34′-1″ | 51 |
| ✳ A117 | 1 | 6 | STR | 33′-8″ | 51 |
| ✳ A118 | 1 | 6 | STR | 33′-4″ | 50 |
| ✳ A119 | 1 | 6 | STR | 32′-11″ | 49 |
| ✳ A120 | 1 | 6 | STR | 32′-6″ | 49 |
| ✳ A121 | 1 | 6 | STR | 32′-1″ | 48 |
| ✳ A122 | 1 | 6 | STR | 31′-8″ | 48 |
| ✳ A123 | 1 | 6 | STR | 31′-3″ | 47 |
| ✳ A124 | 1 | 6 | STR | 30′-10″ | 46 |
| ✳ A125 | 1 | 6 | STR | 30′-5″ | 46 |
| ✳ A126 | 1 | 6 | STR | 30′-1″ | 45 |
| ✳ A127 | 1 | 6 | STR | 29′-8″ | 45 |
| ✳ A128 | 1 | 6 | STR | 29′-3″ | 44 |
| ✳ A129 | 1 | 6 | STR | 28′-10″ | 43 |
| ✳ A130 | 1 | 6 | STR | 28′-5″ | 43 |
| ✳ A131 | 1 | 6 | STR | 28′-0″ | 42 |
| ✳ A132 | 1 | 6 | STR | 27′-7″ | 41 |
| ✳ A133 | 1 | 6 | STR | 27′-2″ | 41 |
| ✳ A134 | 1 | 6 | STR | 26′-10″ | 40 |
| ✳ A135 | 1 | 6 | STR | 26′-5″ | 40 |
| ✳ A136 | 1 | 6 | STR | 26′-0″ | 39 |
| ✳ A137 | 1 | 6 | STR | 25′-7″ | 38 |
| ✳ A138 | 1 | 6 | STR | 25′-2″ | 38 |
| ✳ A139 | 1 | 6 | STR | 24′-9″ | 37 |
| ✳ A140 | 1 | 6 | STR | 24′-4″ | 37 |
| ✳ A141 | 1 | 6 | STR | 24′-0″ | 36 |
| ✳ A142 | 1 | 6 | STR | 23′-7″ | 35 |
| ✳ A143 | 1 | 6 | STR | 23′-2″ | 35 |
| ✳ A144 | 1 | 6 | STR | 22′-9″ | 34 |
| ✳ A145 | 1 | 6 | STR | 22′-4″ | 34 |
| ✳ A146 | 1 | 6 | STR | 21′-11″ | 33 |

## BILL OF MATERIAL

EPOXY COATED REINFORCING STEEL

| BAR | NO. | SIZE | TYPE | LENGTH | WEIGHT (LBS.) |
|---|---|---|---|---|---|
| ✳ A147 | 1 | 6 | STR | 21′-6″ | 32 |
| ✳ A148 | 1 | 6 | STR | 21′-1″ | 32 |
| ✳ A149 | 1 | 6 | STR | 20′-9″ | 31 |
| ✳ A150 | 1 | 6 | STR | 20′-4″ | 31 |
| ✳ A151 | 1 | 6 | STR | 19′-11″ | 30 |
| ✳ A152 | 1 | 6 | STR | 19′-6″ | 29 |
| ✳ A153 | 1 | 6 | STR | 19′-1″ | 29 |
| ✳ A154 | 1 | 6 | STR | 18′-8″ | 28 |
| ✳ A155 | 1 | 6 | STR | 18′-3″ | 27 |
| ✳ A156 | 1 | 6 | STR | 17′-11″ | 27 |
| ✳ A157 | 1 | 6 | STR | 17′-6″ | 26 |
| ✳ A158 | 1 | 6 | STR | 17′-1″ | 26 |
| ✳ A159 | 1 | 6 | STR | 16′-8″ | 25 |
| ✳ A160 | 1 | 6 | STR | 16′-3″ | 24 |
| ✳ A161 | 1 | 6 | STR | 15′-10″ | 24 |
| ✳ A162 | 1 | 6 | STR | 15′-5″ | 23 |
| ✳ A163 | 1 | 6 | STR | 15′-0″ | 23 |
| ✳ A164 | 1 | 6 | STR | 14′-8″ | 22 |
| ✳ A165 | 1 | 6 | STR | 14′-3″ | 21 |
| ✳ A166 | 1 | 6 | STR | 13′-10″ | 21 |
| ✳ A167 | 1 | 6 | STR | 13′-5″ | 20 |
| ✳ A168 | 1 | 6 | STR | 13′-0″ | 20 |
| ✳ A169 | 1 | 6 | STR | 12′-7″ | 19 |
| ✳ A170 | 1 | 6 | STR | 12′-2″ | 18 |
| ✳ A171 | 1 | 6 | STR | 11′-9″ | 18 |
| ✳ A172 | 1 | 6 | STR | 11′-5″ | 17 |
| ✳ A173 | 1 | 6 | STR | 11′-0″ | 17 |
| ✳ A174 | 1 | 6 | STR | 10′-7″ | 16 |
| ✳ A175 | 1 | 6 | STR | 10′-2″ | 15 |
| ✳ A176 | 1 | 6 | STR | 9′-9″ | 15 |
| ✳ A177 | 1 | 6 | STR | 9′-4″ | 14 |
| ✳ A178 | 1 | 6 | STR | 8′-11″ | 13 |
| ✳ A179 | 1 | 6 | STR | 8′-7″ | 13 |
| ✳ A180 | 1 | 6 | STR | 8′-2″ | 12 |
| ✳ A181 | 1 | 6 | STR | 7′-9″ | 12 |
| ✳ A182 | 1 | 6 | STR | 7′-4″ | 11 |
| ✳ A183 | 1 | 6 | STR | 6′-11″ | 10 |
| ✳ A184 | 1 | 6 | STR | 6′-6″ | 10 |
| ✳ A185 | 1 | 6 | STR | 6′-1″ | 9 |
| ✳ A186 | 1 | 6 | STR | 5′-8″ | 9 |
| ✳ A187 | 1 | 6 | STR | 5′-4″ | 8 |
| ✳ A188 | 1 | 6 | STR | 4′-11″ | 7 |
| ✳ A189 | 1 | 6 | STR | 4′-6″ | 7 |
| ✳ A190 | 1 | 6 | STR | 4′-1″ | 6 |
| ✳ A191 | 1 | 6 | STR | 3′-8″ | 6 |
| ✳ A192 | 1 | 6 | STR | 3′-3″ | 5 |
| ✳ A193 | 1 | 6 | STR | 2′-10″ | 4 |
| ✳ A194 | 1 | 6 | STR | 2′-6″ | 4 |
| ✳ A195 | 6 | 6 | STR | 27′-6″ | 248 |
| | | | | | |
| ✳ B1 | 93 | 4 | STR | 25′-0″ | 1,553 |
| ✳ B2 | 155 | 4 | STR | 24′-6″ | 2,537 |
| ✳ B3 | 93 | 4 | STR | 25′-11″ | 1,610 |
| ✳ B4 | 93 | 4 | STR | 23′-8″ | 1,470 |
| ✳ B5 | 87 | 6 | STR | 17′-8″ | 2,309 |
| ✳ B6 | 87 | 6 | STR | 17′-8″ | 2,309 |
| ✳ B7 | 87 | 6 | STR | 13′-8″ | 1,786 |
| | | | | | |
| ✳ G1 | 2 | 5 | STR | 33′-6″ | 70 |
| ✳ G2 | 2 | 5 | STR | 36′-0″ | 75 |
| | | | | | |
| ✳ J1 | 124 | 4 | 4 | 1′-5″ | 117 |
| | | | | | |
| ✳ K1 | 2 | 8 | 1 | 17′-9″ | 95 |
| ✳ K2 | 4 | 8 | 2 | 27′-8″ | 295 |
| ✳ K3 | 2 | 8 | 1 | 19′-9″ | 105 |
| | | | | | |
| ✳ K5 | 2 | 8 | 1 | 20′-11″ | 112 |
| ✳ K6 | 4 | 8 | 2 | 28′-1″ | 300 |
| ✳ K7 | 2 | 8 | 1 | 20′-5″ | 109 |
| | | | | | |
| ✳ S1 | 72 | 5 | 3 | 5′-8″ | 426 |
| ✳ S2 | 72 | 4 | 5 | 7′-2″ | 345 |
| | | | | | |
| EPOXY COATED REINFORCING STEEL TOTAL: | | | | | 62,116 |

## BAR TYPES

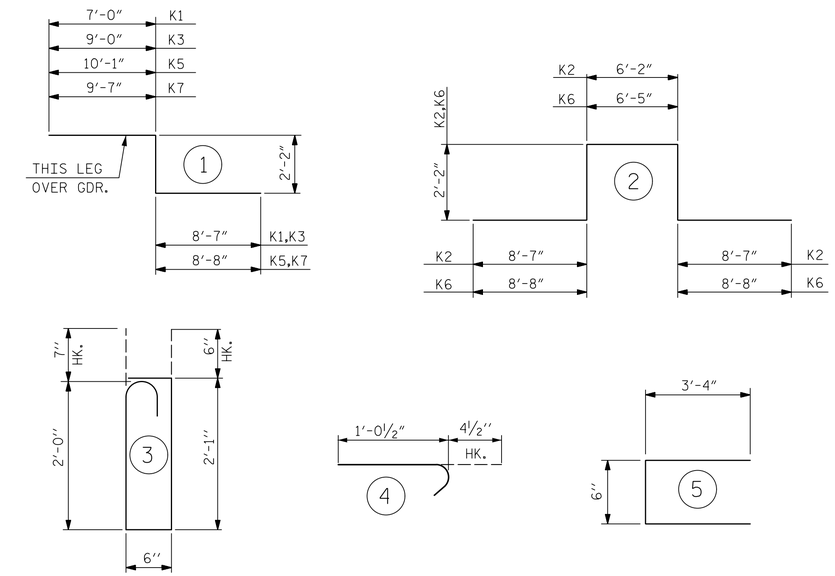


ALL BAR DIMENSIONS ARE OUT TO OUT

## SUPERSTRUCTURE BILL OF MATERIAL

| | CLASS AA CONCRETE | REINFORCING STEEL | EPOXY COATED REINFORCING STEEL |
|---|---|---|---|
| | ( CU. YDS. ) | ( LBS. ) | ( LBS. ) |
| POUR 1 | 97.7 | 56,673 | 62,116 |
| POUR 2 | 122.2 | | |
| POUR 3 | 188.4 | | |
| POUR 4 | 129.9 | | |
| TOTALS✳✳ | 538.2 | 56,673 | 62,116 |

✳✳ QUANTITIES FOR BARRIER RAIL ARE NOT INCLUDED. CONCRETE IN CLOSURE POUR AT SLAB EXPANSION JOINTS IS INCLUDED IN THE ADJACENT POUR QUANTITY.

## SUPERSTRUCTURE REINFORCING STEEL LENGTHS ARE BASED ON THE FOLLOWING MINIMUM SPLICE LENGTHS

| BAR SIZE | SUPERSTRUCTURE EXCEPT APPROACH SLABS, PARAPET, AND BARRIER RAIL | | APPROACH SLABS | | PARAPET AND BARRIER RAIL |
|---|---|---|---|---|---|
| | EPOXY COATED | UNCOATED | EPOXY COATED | UNCOATED | |
| #4 | 2′-0″ | 1′-9″ | 2′-0″ | 1′-9″ | 2′-9″ |
| #5 | 2′-5″ | 2′-0″ | 2′-6″ | 2′-2″ | 3′-5″ |
| #6 | 3′-0″ | 2′-5″ | 3′-10″ | 2′-7″ | 4′-4″ |

PROJECT NO. R-1015

CRAVEN COUNTY

STATION: POC STA. 138+31.09 -L-

SHEET 1 OF 2

DocuSigned by: James P. Gregg
12/6/2018

NORTH CAROLINA PROFESSIONAL SEAL 046632 ENGINEER JAMES P. GREGG

STATE OF NORTH CAROLINA
DEPARTMENT OF TRANSPORTATION
RALEIGH

STANDARD
SUPERSTRUCTURE BILL OF MATERIAL
LEFT LANE

ASSEMBLED BY : A. SMITH DATE : 7/18
CHECKED BY : D. LAWRENCE DATE : 10/18

DRAWN BY : JMB 5/87
CHECKED BY : SJD 9/87

| | | |
|---|---|---|
| REV. 8/16/99 | RWW/LES |
| REV. 5/1/06 | TLA/GM |
| REV. 10/1/11 | MAA/GM |

DOCUMENT NOT CONSIDERED FINAL UNLESS ALL SIGNATURES COMPLETED

HNTB NORTH CAROLINA, P.C.
NC License No. C-1554
343 E. Six Forks Rd., Suite 200, Raleigh, N.C. 27609

DRAWN BY A. SMITH DATE 7/18
CHECKED BY D. LAWRENCE DATE 10/18
DESIGN ENGINEER OF RECORD J. GREGG DATE 10/18

DWG. NO. 28

| REVISIONS | | | | | | SHEET NO. |
|---|---|---|---|---|---|---|
| NO. | BY | DATE | NO. | BY | DATE | S03-28 |
| 1 | | | 3 | | | TOTAL SHEETS |
| 2 | | | 4 | | | 46 |

STD. NO. BOM2

DocuSign Envelope ID: 609DC734-B6DC-4B94-B1D1-420DCB5CA916

## BILL OF MATERIAL

UNCOATED REINFORCING STEEL

| BAR | NO. | SIZE | TYPE | LENGTH | WEIGHT (LBS.) |
|---|---|---|---|---|---|
| A201 | 616 | 5 | STR | 42'-11" | 27,573 |
| A202 | 1 | 5 | STR | 42'-8" | 45 |
| A203 | 1 | 5 | STR | 42'-2" | 44 |
| A204 | 1 | 5 | STR | 41'-9" | 44 |
| A205 | 1 | 5 | STR | 41'-4" | 43 |
| A206 | 1 | 5 | STR | 40'-11" | 43 |
| A207 | 1 | 5 | STR | 40'-5" | 42 |
| A208 | 1 | 5 | STR | 40'-0" | 42 |
| A209 | 1 | 5 | STR | 39'-7" | 41 |
| A210 | 1 | 5 | STR | 39'-2" | 41 |
| A211 | 1 | 5 | STR | 38'-8" | 40 |
| A212 | 1 | 5 | STR | 38'-3" | 40 |
| A213 | 1 | 5 | STR | 37'-10" | 39 |
| A214 | 1 | 5 | STR | 37'-5" | 39 |
| A215 | 1 | 5 | STR | 36'-11" | 39 |
| A216 | 1 | 5 | STR | 36'-6" | 38 |
| A217 | 1 | 5 | STR | 36'-1" | 38 |
| A218 | 1 | 5 | STR | 35'-8" | 37 |
| A219 | 1 | 5 | STR | 35'-2" | 37 |
| A220 | 1 | 5 | STR | 34'-9" | 36 |
| A221 | 1 | 5 | STR | 34'-4" | 36 |
| A222 | 1 | 5 | STR | 33'-11" | 35 |
| A223 | 1 | 5 | STR | 33'-5" | 35 |
| A224 | 1 | 5 | STR | 33'-0" | 34 |
| A225 | 1 | 5 | STR | 32'-7" | 34 |
| A226 | 1 | 5 | STR | 32'-2" | 34 |
| A227 | 1 | 5 | STR | 31'-9" | 33 |
| A228 | 1 | 5 | STR | 31'-3" | 33 |
| A229 | 1 | 5 | STR | 30'-10" | 32 |
| A230 | 1 | 5 | STR | 30'-5" | 32 |
| A231 | 1 | 5 | STR | 30'-0" | 31 |
| A232 | 1 | 5 | STR | 29'-6" | 31 |
| A233 | 1 | 5 | STR | 29'-1" | 30 |
| A234 | 1 | 5 | STR | 28'-8" | 30 |
| A235 | 1 | 5 | STR | 28'-3" | 29 |
| A236 | 1 | 5 | STR | 27'-9" | 29 |
| A237 | 1 | 5 | STR | 27'-4" | 29 |
| A238 | 1 | 5 | STR | 26'-11" | 28 |
| A239 | 1 | 5 | STR | 26'-6" | 28 |
| A240 | 1 | 5 | STR | 26'-0" | 27 |
| A241 | 1 | 5 | STR | 25'-7" | 27 |
| A242 | 1 | 5 | STR | 25'-2" | 26 |
| A243 | 1 | 5 | STR | 24'-9" | 26 |
| A244 | 1 | 5 | STR | 24'-3" | 25 |
| A245 | 1 | 5 | STR | 23'-10" | 25 |
| A246 | 1 | 5 | STR | 23'-5" | 24 |
| A247 | 1 | 5 | STR | 23'-0" | 24 |
| A248 | 1 | 5 | STR | 22'-6" | 23 |
| A249 | 1 | 5 | STR | 22'-1" | 23 |
| A250 | 1 | 5 | STR | 21'-8" | 23 |
| A251 | 1 | 5 | STR | 21'-3" | 22 |
| A252 | 1 | 5 | STR | 20'-10" | 22 |
| A253 | 1 | 5 | STR | 20'-4" | 21 |
| A254 | 1 | 5 | STR | 19'-11" | 21 |
| A255 | 1 | 5 | STR | 19'-6" | 20 |
| A256 | 1 | 5 | STR | 19'-1" | 20 |
| A257 | 1 | 5 | STR | 18'-7" | 19 |
| A258 | 1 | 5 | STR | 18'-2" | 19 |
| A259 | 1 | 5 | STR | 17'-9" | 19 |
| A260 | 1 | 5 | STR | 17'-4" | 18 |
| A261 | 1 | 5 | STR | 16'-10" | 18 |
| A262 | 1 | 5 | STR | 16'-5" | 17 |
| A263 | 1 | 5 | STR | 16'-0" | 17 |
| A264 | 1 | 5 | STR | 15'-7" | 16 |
| A265 | 1 | 5 | STR | 15'-1" | 16 |
| A266 | 1 | 5 | STR | 14'-8" | 15 |
| A267 | 1 | 5 | STR | 14'-3" | 15 |
| A268 | 1 | 5 | STR | 13'-10" | 14 |
| A269 | 1 | 5 | STR | 13'-4" | 14 |
| A270 | 1 | 5 | STR | 12'-11" | 13 |
| A271 | 1 | 5 | STR | 12'-6" | 13 |
| A272 | 1 | 5 | STR | 12'-1" | 13 |
| A273 | 1 | 5 | STR | 11'-8" | 12 |

## BILL OF MATERIAL

UNCOATED REINFORCING STEEL

| BAR | NO. | SIZE | TYPE | LENGTH | WEIGHT (LBS.) |
|---|---|---|---|---|---|
| A274 | 1 | 5 | STR | 11'-2" | 12 |
| A275 | 1 | 5 | STR | 10'-9" | 11 |
| A276 | 1 | 5 | STR | 10'-4" | 11 |
| A277 | 1 | 5 | STR | 9'-11" | 10 |
| A278 | 1 | 5 | STR | 9'-5" | 10 |
| A279 | 1 | 5 | STR | 9'-0" | 9 |
| A280 | 1 | 5 | STR | 8'-7" | 9 |
| A281 | 1 | 5 | STR | 8'-2" | 9 |
| A282 | 1 | 5 | STR | 7'-8" | 8 |
| A283 | 1 | 5 | STR | 7'-3" | 8 |
| A284 | 1 | 5 | STR | 6'-10" | 7 |
| A285 | 1 | 5 | STR | 6'-5" | 7 |
| A286 | 1 | 5 | STR | 5'-11" | 6 |
| A287 | 1 | 5 | STR | 5'-6" | 6 |
| A288 | 1 | 5 | STR | 5'-1" | 5 |
| A289 | 1 | 5 | STR | 4'-8" | 5 |
| A290 | 1 | 5 | STR | 4'-2" | 4 |
| A291 | 1 | 5 | STR | 3'-9" | 4 |
| A292 | 1 | 5 | STR | 3'-4" | 3 |
| A293 | 1 | 5 | STR | 2'-11" | 3 |
| A294 | 1 | 5 | STR | 2'-6" | 3 |
| A295 | 1 | 5 | STR | 42'-8" | 45 |
| A296 | 1 | 5 | STR | 42'-3" | 44 |
| A297 | 1 | 5 | STR | 41'-10" | 44 |
| A298 | 1 | 5 | STR | 41'-5" | 43 |
| A299 | 1 | 5 | STR | 41'-0" | 43 |
| A300 | 1 | 5 | STR | 40'-7" | 42 |
| A301 | 1 | 5 | STR | 40'-2" | 42 |
| A302 | 1 | 5 | STR | 39'-9" | 41 |
| A303 | 1 | 5 | STR | 39'-5" | 41 |
| A304 | 1 | 5 | STR | 39'-0" | 41 |
| A305 | 1 | 5 | STR | 38'-7" | 40 |
| A306 | 1 | 5 | STR | 38'-2" | 40 |
| A307 | 1 | 5 | STR | 37'-9" | 39 |
| A308 | 1 | 5 | STR | 37'-4" | 39 |
| A309 | 1 | 5 | STR | 36'-11" | 39 |
| A310 | 1 | 5 | STR | 36'-6" | 38 |
| A311 | 1 | 5 | STR | 36'-2" | 38 |
| A312 | 1 | 5 | STR | 35'-9" | 37 |
| A313 | 1 | 5 | STR | 35'-4" | 37 |
| A314 | 1 | 5 | STR | 34'-11" | 36 |
| A315 | 1 | 5 | STR | 34'-6" | 36 |
| A316 | 1 | 5 | STR | 34'-1" | 36 |
| A317 | 1 | 5 | STR | 33'-8" | 35 |
| A318 | 1 | 5 | STR | 33'-4" | 35 |
| A319 | 1 | 5 | STR | 32'-11" | 34 |
| A320 | 1 | 5 | STR | 32'-6" | 34 |
| A321 | 1 | 5 | STR | 32'-1" | 33 |
| A322 | 1 | 5 | STR | 31'-8" | 33 |
| A323 | 1 | 5 | STR | 31'-3" | 33 |
| A324 | 1 | 5 | STR | 30'-10" | 32 |
| A325 | 1 | 5 | STR | 30'-5" | 32 |
| A326 | 1 | 5 | STR | 30'-1" | 31 |
| A327 | 1 | 5 | STR | 29'-8" | 31 |
| A328 | 1 | 5 | STR | 29'-3" | 31 |
| A329 | 1 | 5 | STR | 28'-10" | 30 |
| A330 | 1 | 5 | STR | 28'-5" | 30 |
| A331 | 1 | 5 | STR | 28'-0" | 29 |
| A332 | 1 | 5 | STR | 27'-7" | 29 |
| A333 | 1 | 5 | STR | 27'-2" | 28 |
| A334 | 1 | 5 | STR | 26'-10" | 28 |
| A335 | 1 | 5 | STR | 26'-5" | 28 |
| A336 | 1 | 5 | STR | 26'-0" | 27 |
| A337 | 1 | 5 | STR | 25'-7" | 27 |
| A338 | 1 | 5 | STR | 25'-2" | 26 |
| A339 | 1 | 5 | STR | 24'-9" | 26 |
| A340 | 1 | 5 | STR | 24'-4" | 25 |
| A341 | 1 | 5 | STR | 24'-0" | 25 |
| A342 | 1 | 5 | STR | 23'-7" | 25 |
| A343 | 1 | 5 | STR | 23'-2" | 24 |
| A344 | 1 | 5 | STR | 22'-9" | 24 |
| A345 | 1 | 5 | STR | 22'-4" | 23 |
| A346 | 1 | 5 | STR | 21'-11" | 23 |

## BILL OF MATERIAL

UNCOATED REINFORCING STEEL

| BAR | NO. | SIZE | TYPE | LENGTH | WEIGHT (LBS.) |
|---|---|---|---|---|---|
| A347 | 1 | 5 | STR | 21'-6" | 22 |
| A348 | 1 | 5 | STR | 21'-1" | 22 |
| A349 | 1 | 5 | STR | 20'-9" | 22 |
| A350 | 1 | 5 | STR | 20'-4" | 21 |
| A351 | 1 | 5 | STR | 19'-11" | 21 |
| A352 | 1 | 5 | STR | 19'-6" | 20 |
| A353 | 1 | 5 | STR | 19'-1" | 20 |
| A354 | 1 | 5 | STR | 18'-8" | 19 |
| A355 | 1 | 5 | STR | 18'-3" | 19 |
| A356 | 1 | 5 | STR | 17'-11" | 19 |
| A357 | 1 | 5 | STR | 17'-6" | 18 |
| A358 | 1 | 5 | STR | 17'-1" | 18 |
| A359 | 1 | 5 | STR | 16'-8" | 17 |
| A360 | 1 | 5 | STR | 16'-3" | 17 |
| A361 | 1 | 5 | STR | 15'-10" | 17 |
| A362 | 1 | 5 | STR | 15'-5" | 16 |
| A363 | 1 | 5 | STR | 15'-0" | 16 |
| A364 | 1 | 5 | STR | 14'-8" | 15 |
| A365 | 1 | 5 | STR | 14'-3" | 15 |
| A366 | 1 | 5 | STR | 13'-10" | 14 |
| A367 | 1 | 5 | STR | 13'-5" | 14 |
| A368 | 1 | 5 | STR | 13'-0" | 14 |
| A369 | 1 | 5 | STR | 12'-7" | 13 |
| A370 | 1 | 5 | STR | 12'-2" | 13 |
| A371 | 1 | 5 | STR | 11'-9" | 12 |
| A372 | 1 | 5 | STR | 11'-5" | 12 |
| A373 | 1 | 5 | STR | 11'-0" | 11 |
| A374 | 1 | 5 | STR | 10'-7" | 11 |
| A375 | 1 | 5 | STR | 10'-2" | 11 |
| A376 | 1 | 5 | STR | 9'-9" | 10 |
| A377 | 1 | 5 | STR | 9'-4" | 10 |
| A378 | 1 | 5 | STR | 8'-11" | 9 |
| A379 | 1 | 5 | STR | 8'-7" | 9 |
| A380 | 1 | 5 | STR | 8'-2" | 9 |
| A381 | 1 | 5 | STR | 7'-9" | 8 |
| A382 | 1 | 5 | STR | 7'-4" | 8 |
| A383 | 1 | 5 | STR | 6'-11" | 7 |
| A384 | 1 | 5 | STR | 6'-6" | 7 |
| A385 | 1 | 5 | STR | 6'-1" | 6 |
| A386 | 1 | 5 | STR | 5'-8" | 6 |
| A387 | 1 | 5 | STR | 5'-4" | 6 |
| A388 | 1 | 5 | STR | 4'-11" | 5 |
| A389 | 1 | 5 | STR | 4'-6" | 5 |
| A390 | 1 | 5 | STR | 4'-1" | 4 |
| A391 | 1 | 5 | STR | 3'-8" | 4 |
| A392 | 1 | 5 | STR | 3'-3" | 3 |
| A393 | 1 | 5 | STR | 2'-10" | 3 |
| A394 | 1 | 5 | STR | 2'-6" | 3 |
| | | | | | |
| B101 | 98 | 5 | STR | 36'-4" | 3,714 |
| B102 | 98 | 5 | STR | 58'-0" | 5,928 |
| B103 | 98 | 5 | STR | 37'-9" | 3,859 |
| B104 | 98 | 5 | STR | 34'-5" | 3,518 |
| B105 | 87 | 6 | STR | 17'-8" | 2,309 |
| B106 | 87 | 6 | STR | 17'-8" | 2,309 |
| B107 | 87 | 6 | STR | 13'-8" | 1,786 |
| | | | | | |
| K4 | 8 | 6 | STR | 33'-6" | 403 |
| K8 | 8 | 6 | STR | 36'-0" | 433 |
| K9 | 12 | 6 | STR | 16'-8" | 300 |
| REINFORCING STEEL TOTAL: | | | | | 56,673 |

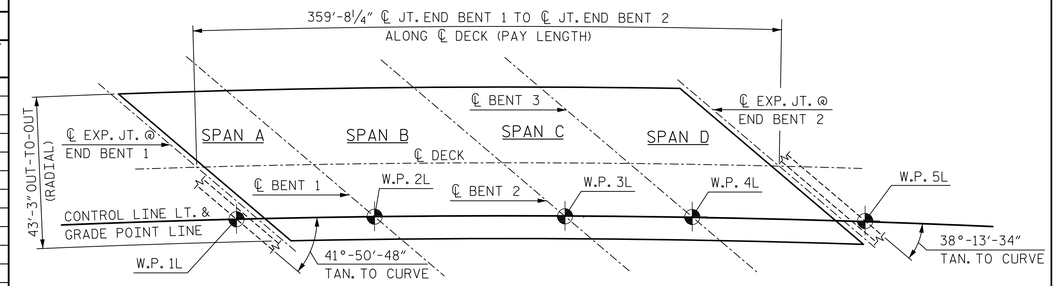


## LAYOUT FOR COMPUTING AREA REINFORCED CONCRETE DECK SLAB
( SQ. FT. = 15,549 )

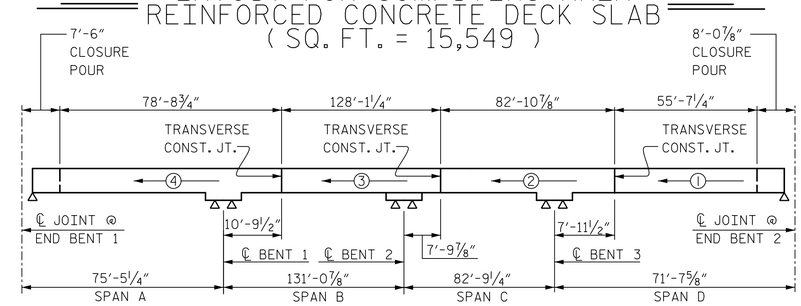


### POURING SEQUENCE

NOTE: ALL DIMENSIONS ARE ALONG CONTROL LINE AND ARE ARC DIMENSIONS.

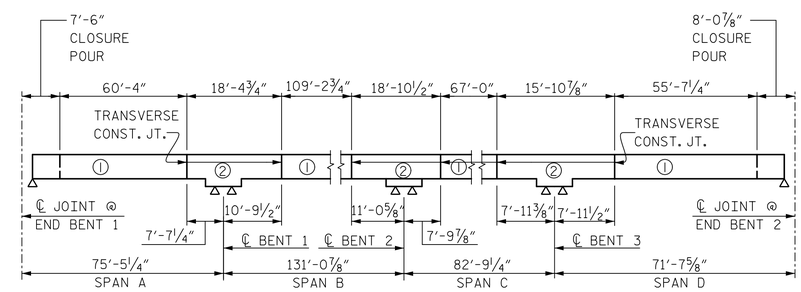


### OPTIONAL POURING SEQUENCE

NOTE: ALL DIMENSIONS ARE ALONG CONTROL LINE AND ARE ARC DIMENSIONS.

NOTE: POUR ② CAN NOT BE STARTED UNTIL BOTH ADJACENT ① POURS REACH A MINIMUM OF 3000 PSI

| GROOVING BRIDGE FLOORS | | |
|---|---|---|
| APPROACH SLABS | 1,786 | SQ.FT. |
| BRIDGE DECK | 13,245 | SQ.FT. |
| TOTAL | 15,031 | SQ.FT. |

PROJECT NO. R-1015

CRAVEN COUNTY

STATION: POC STA. 138+31.09 -L-

SHEET 2 OF 2

DocuSigned by: James P. Gregg 12/6/2018

NORTH CAROLINA PROFESSIONAL SEAL 046632 ENGINEER JAMES P. GREGG

STATE OF NORTH CAROLINA
DEPARTMENT OF TRANSPORTATION
RALEIGH

STANDARD
SUPERSTRUCTURE
BILL OF MATERIAL
LEFT LANE

ASSEMBLED BY : A. SMITH DATE : 7/18
CHECKED BY : D. LAWRENCE DATE : 10/18

DRAWN BY : JMB 5/87
CHECKED BY : SJD 9/87

REV. 8/16/99 RWW/LES
REV. 5/1/06 TLA/GM
REV. 10/1/11 MAA/GM

**DOCUMENT NOT CONSIDERED FINAL UNLESS ALL SIGNATURES COMPLETED**

HNTB NORTH CAROLINA, P.C.
NC License No. C-1554
343 E. Six Forks Rd., Suite 200, Raleigh, N.C. 27609

DRAWN BY A. SMITH DATE 7/18
CHECKED BY D. LAWRENCE DATE 10/18
DESIGN ENGINEER OF RECORD J. GREGG DATE 10/18

DWG. NO. 29

| REVISIONS | | | | | | SHEET NO. |
|---|---|---|---|---|---|---|
| NO. | BY | DATE | NO. | BY | DATE | S03-29 |
| 1 | | | 3 | | | TOTAL SHEETS |
| 2 | | | 4 | | | 46 |

STD. NO. BOM2

DocuSign Envelope ID: 5B67B2BB-4DD6-4E6E-81A0-C0FE3C5CF566

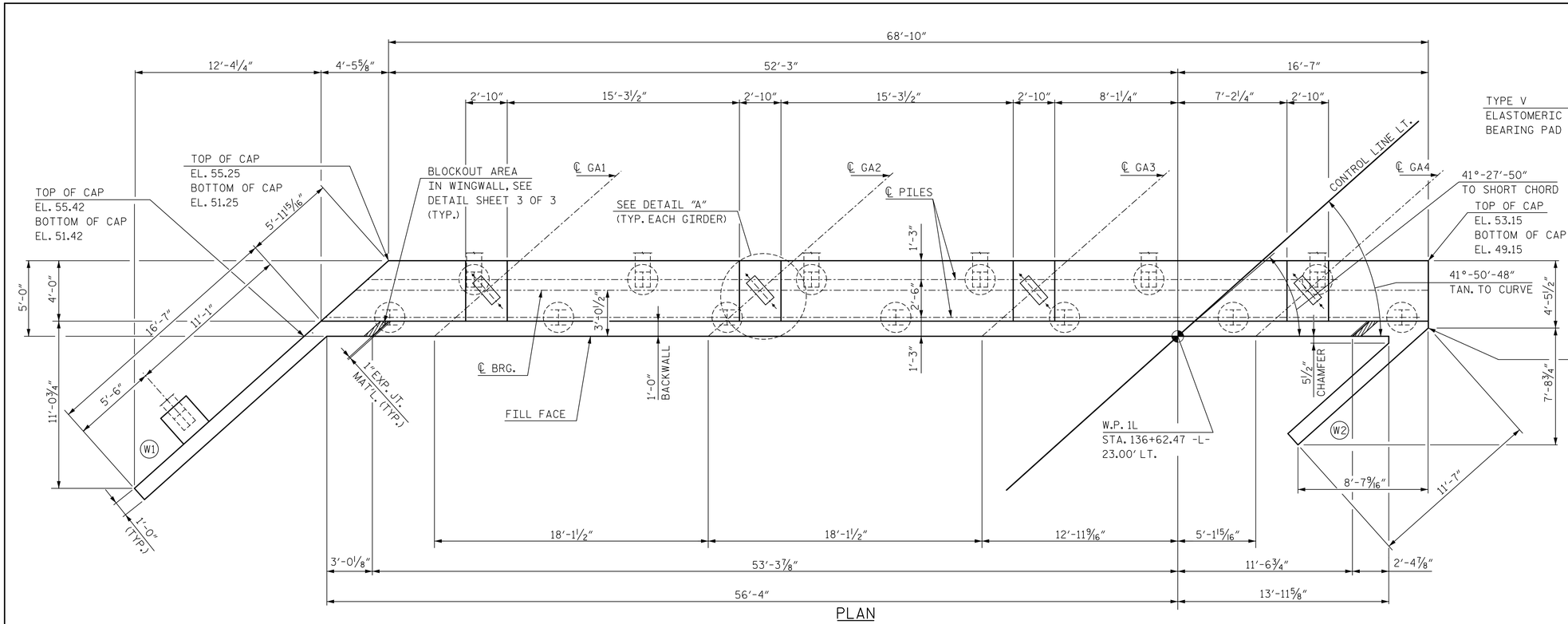


PLAN

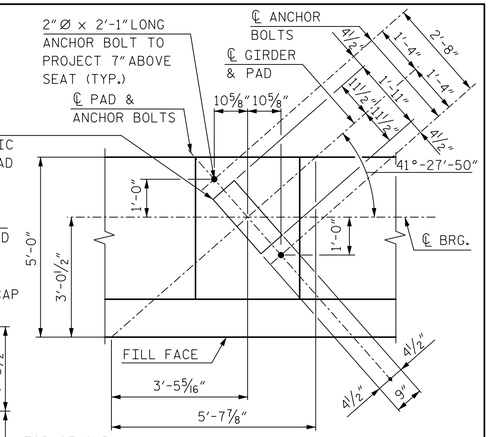


DETAIL A

| TOP OF PILE ELEVATIONS | |
|---|---|
| PILE | ELEVATION |
| 1 | 53.25 |
| 2 | 53.08 |
| 3 | 52.91 |
| 4 | 52.74 |
| 5 | 52.57 |
| 6 | 52.39 |
| 7 | 52.22 |
| 8 | 52.05 |
| 9 | 51.88 |
| 10 | 51.71 |
| 11 | 51.54 |
| 12 | 51.37 |
| 13 | 51.20 |

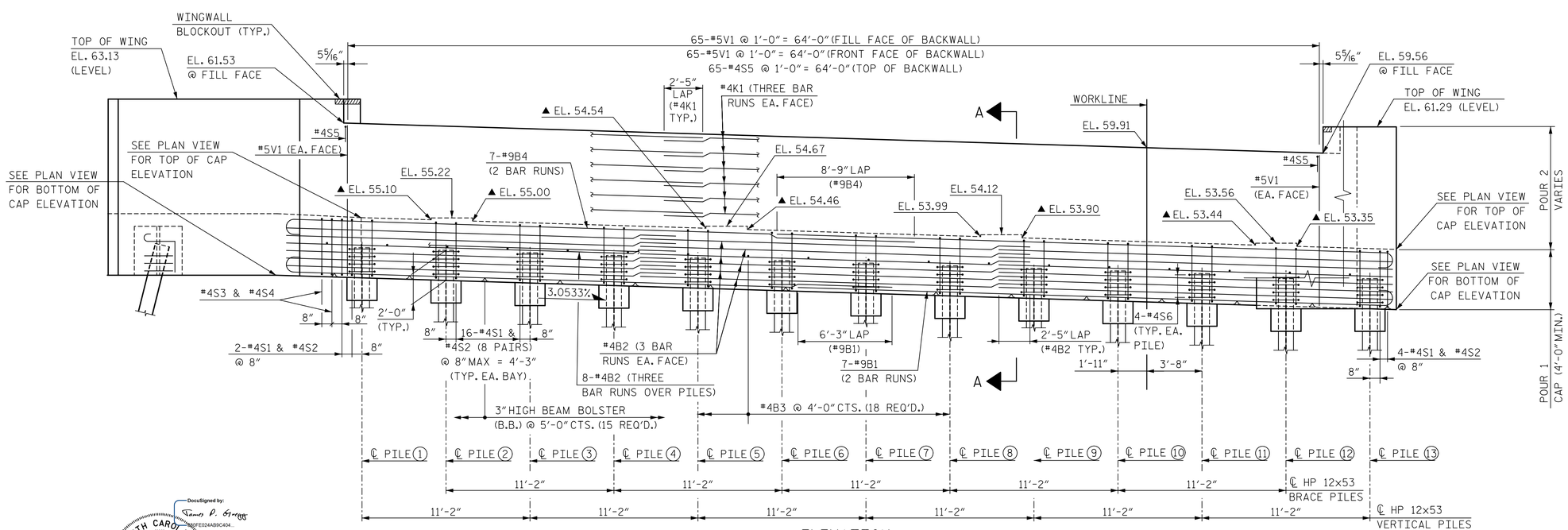


ELEVATION

▲ FOR LOCATION OF ELEVATIONS BETWEEN BRIDGE SEATS, SEE SECTION A-A, SHEET 2 OF 3.

NOTES:

FOR NOTES AND PILE SPLICE DETAILS, SEE SHEET 3 OF 3.

FOR WINGWALL DETAILS AND SECTION A-A, SEE SHEET 2 OF 3.

INDICATES 3:12 PILE BATTER IN DIRECTION SHOWN.

PROJECT NO. R-1015

CRAVEN COUNTY

STATION: POC STA. 138+31.09 -L-

SHEET 1 OF 3

STATE OF NORTH CAROLINA
DEPARTMENT OF TRANSPORTATION
RALEIGH

SUBSTRUCTURE

END BENT 1

LEFT LANE

NORTH CAROLINA PROFESSIONAL SEAL 046632 ENGINEER JAMES P. GREGG

DocuSigned by: James P. Gregg 5B67B2BB4DD6E02AB9C404...

11/20/2018

DOCUMENT NOT CONSIDERED FINAL UNLESS ALL SIGNATURES COMPLETED

HNTB

HNTB NORTH CAROLINA, P.C.
NC License No. C-1554
343 E. Six Forks Rd., Suite 200, Raleigh, N.C. 27609

DRAWN BY B. NEUPANE DATE 9/18
CHECKED BY E. JOWZA DATE 10/18
DESIGN ENGINEER OF RECORD J. GREGG DATE 10/18

DWG. NO. 30

| REVISIONS | | | | | | SHEET NO. |
|---|---|---|---|---|---|---|
| NO. | BY | DATE | NO. | BY | DATE | S03-30 |
| 1 | | | 3 | | | TOTAL SHEETS |
| 2 | | | 4 | | | 46 |

DocuSign Envelope ID: 5B67B2BB-4DD6-4E6E-81A0-C0FE3C5CF566

NOTES:

FOR NOTES, SEE SHEET 3 OF 3.
FOR BLOCKOUT IN WINGWALL, SEE SHEET 3 OF 3.

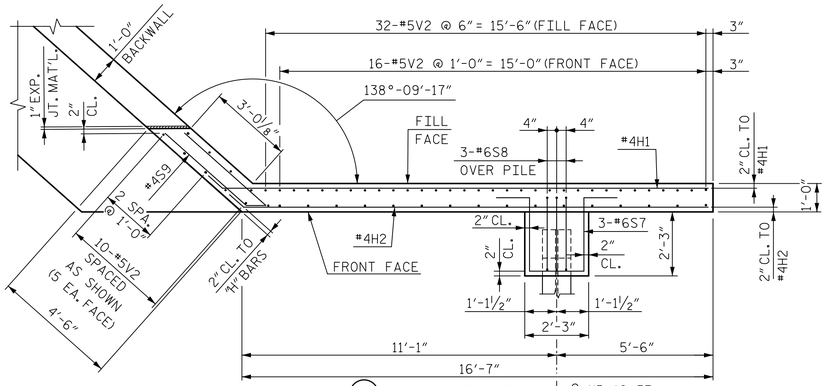


W1 PLAN OF WING

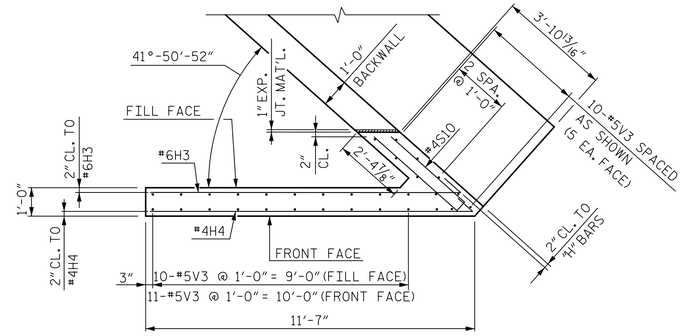


W2 PLAN OF WING

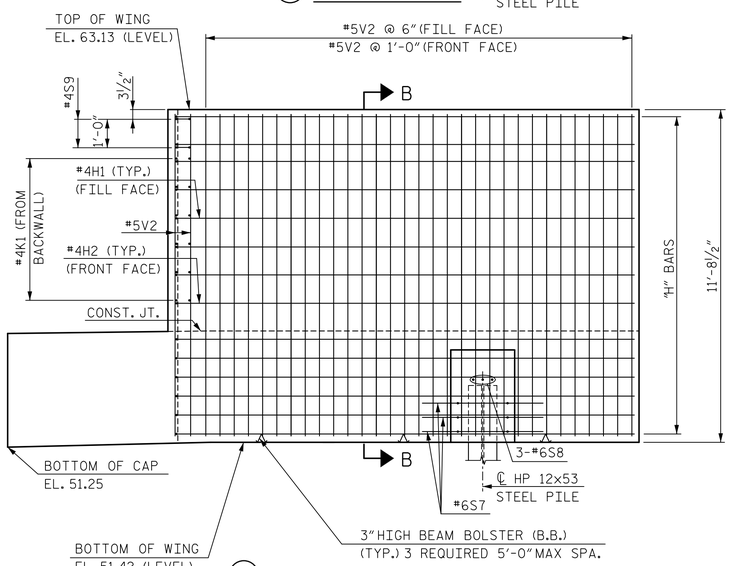


W1 ELEVATION OF WING

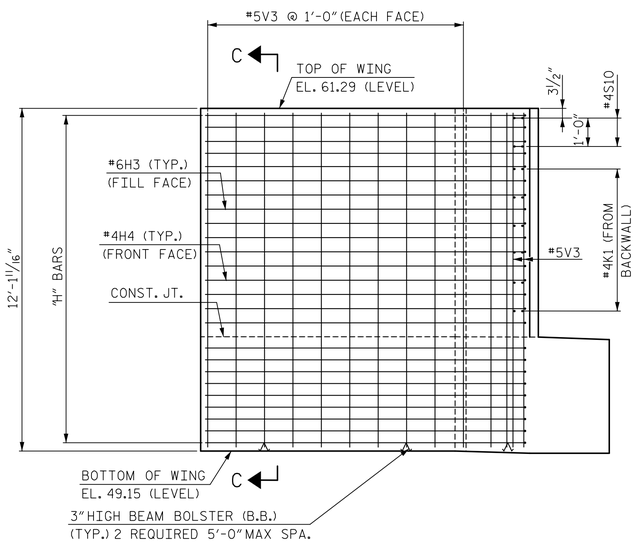


W2 ELEVATION OF WING

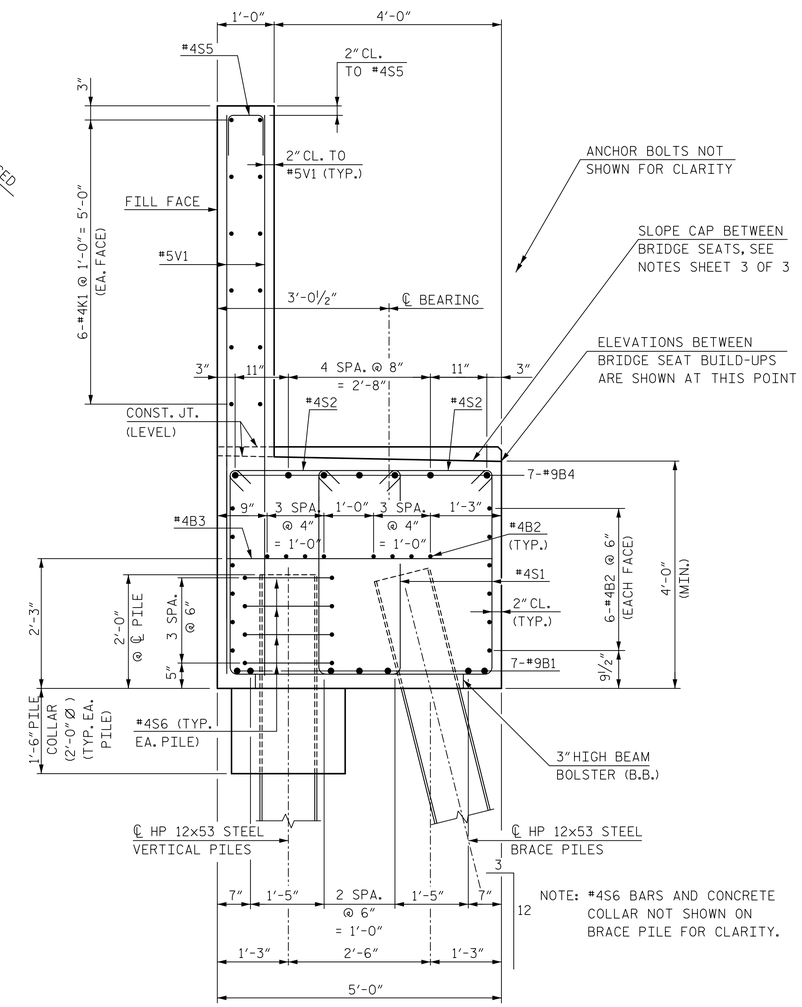


NOTE: #4S6 BARS AND CONCRETE COLLAR NOT SHOWN ON BRACE PILE FOR CLARITY.

SECTION A-A

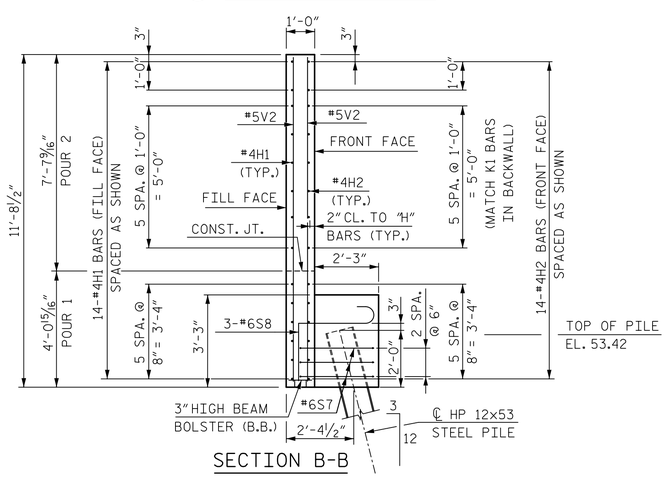


SECTION B-B

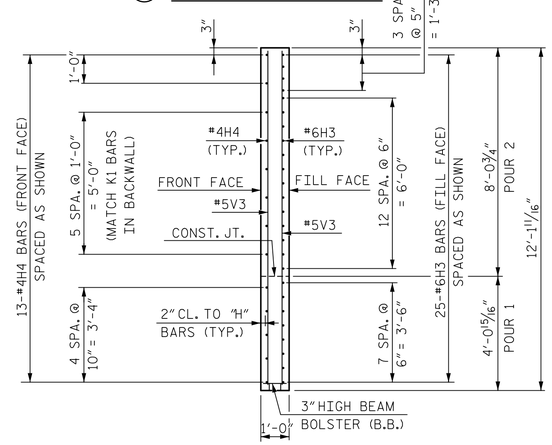


SECTION C-C

PROJECT NO. R-1015

CRAVEN COUNTY

STATION: POC STA. 138+31.09 -L-

SHEET 2 OF 3

STATE OF NORTH CAROLINA
DEPARTMENT OF TRANSPORTATION
RALEIGH

SUBSTRUCTURE

END BENT 1

LEFT LANE

DocuSigned by: James P. Gregg
DFE024AB9C404...

NORTH CAROLINA PROFESSIONAL SEAL 046632 ENGINEER JAMES P. GREGG

11/20/2018

HNTB

HNTB NORTH CAROLINA, P.C.
NC License No. C-1554
343 E. Six Forks Rd., Suite 200, Raleigh, N.C. 27609

DRAWN BY B. NEUPANE DATE 9/18
CHECKED BY E. JOWZA DATE 10/18
DESIGN ENGINEER OF RECORD J. GREGG DATE 10/18

DWG. NO. 31

DOCUMENT NOT CONSIDERED FINAL UNLESS ALL SIGNATURES COMPLETED

| REVISIONS | | | | | | SHEET NO. |
|---|---|---|---|---|---|---|
| NO. | BY | DATE | NO. | BY | DATE | S03-31 |
| 1 | | | 3 | | | TOTAL SHEETS |
| 2 | | | 4 | | | 46 |

DocuSign Envelope ID: 9A444B5E-17E2-4861-A739-E48F3A79A9E4

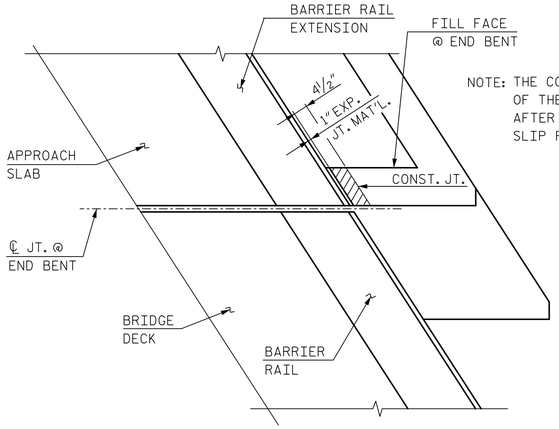


NOTE: THE CONCRETE IN THE SHADED AREA OF THE WING SHALL BE POURED AFTER BARRIER RAILS ARE CAST IF SLIP FORMING IS USED.

PLAN

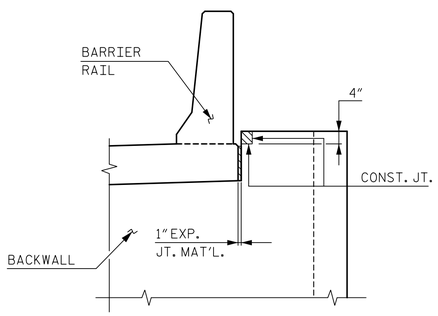


ELEVATION

BLOCKOUT IN WINGWALL

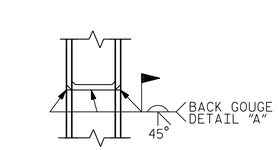


*PILE VERTICAL

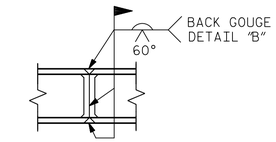


*PILE HORIZONTAL OR VERTICAL

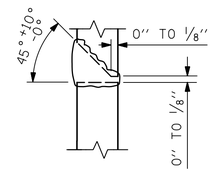


DETAIL "A"

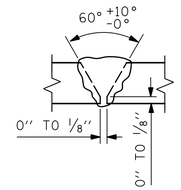


DETAIL "B"

* POSITION OF PILE DURING WELDING.

## PILE SPLICE DETAILS

NOTES:

STIRRUPS IN CAP MAY BE SHIFTED AS NECESSARY TO CLEAR ANCHOR BOLTS.

BACKWALL SHALL BE PLACED BEFORE APPLYING THE EPOXY PROTECTIVE COATING.

THE TOP SURFACE AREAS OF THE END BENT CAPS SHALL BE CURED IN ACCORDANCE WITH THE STANDARD SPECIFICATIONS EXCEPT THE MEMBRANE CURING COMPOUND METHOD SHALL NOT BE USED.

THE TOP SURFACE OF THE END BENT CAP EXCEPT THE BRIDGE SEAT BUILDUPS SHALL BE SLOPED TRANSVERSELY FROM THE FILL FACE TO THE BACK FACE AT THE RATE OF 2%.

## BAR TYPES

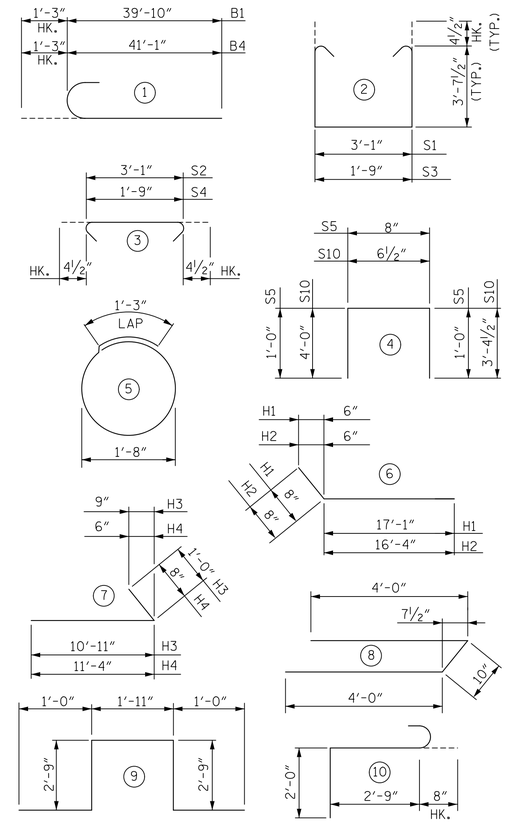


ALL BAR DIMENSIONS ARE OUT TO OUT

## BILL OF REINFORCING

END BENT 1

| BAR | NO. | SIZE | TYPE | LENGTH | WEIGHT |
|---|---|---|---|---|---|
| B1 | 14 | 9 | 1 | 41'-1" | 1,956 |
| B2 | 60 | 4 | STR | 26'-2" | 1,049 |
| B3 | 18 | 4 | STR | 4'-8" | 56 |
| B4 | 14 | 9 | 1 | 42'-4" | 2,015 |
| | | | | | |
| H1 | 14 | 4 | 6 | 17'-9" | 166 |
| H2 | 14 | 4 | 6 | 17'-0" | 159 |
| H3 | 25 | 6 | 7 | 11'-11" | 447 |
| H4 | 13 | 4 | 7 | 12'-0" | 104 |
| | | | | | |
| K1 | 36 | 4 | STR | 26'-2" | 629 |
| | | | | | |
| S1 | 198 | 4 | 2 | 11'-1" | 1,466 |
| S2 | 198 | 4 | 3 | 3'-10" | 507 |
| S3 | 2 | 4 | 2 | 9'-9" | 13 |
| S4 | 2 | 4 | 3 | 2'-6" | 3 |
| S5 | 65 | 4 | 4 | 2'-8" | 116 |
| S6 | 52 | 4 | 5 | 6'-6" | 226 |
| S7 | 3 | 6 | 9 | 9'-5" | 42 |
| S8 | 3 | 6 | 10 | 5'-5" | 24 |
| S9 | 2 | 4 | 8 | 8'-10" | 12 |
| S10 | 2 | 4 | 4 | 7'-11" | 11 |
| | | | | | |
| V1 | 130 | 5 | STR | 9'-10" | 1,333 |
| V2 | 58 | 5 | STR | 11'-3" | 681 |
| V3 | 31 | 5 | STR | 11'-8" | 377 |

## QUANTITIES

| | | |
|---|---|---|
| REINFORCING STEEL | LBS. | 11,392 |
| | | |
| CLASS "A" CONCRETE BREAKDOWN | | |
| POUR 1 - CAP, COLLARS & BOT. OF WINGS | CU. YDS. | 61.0 |
| POUR 2 - TOP OF WINGS & BACKWALL | CU. YDS. | 25.3 |
| TOTAL | CU. YDS. | 86.3 |
| HP 12x53 STEEL PILES | NO. | 14 |
| | LIN. FT. | 1,470 |
| | | |
| PILE REDRIVES | EA. | 6 |
| | | |
| PILE DRIVING EQUIPMENT SETUP | EA. | 14 |

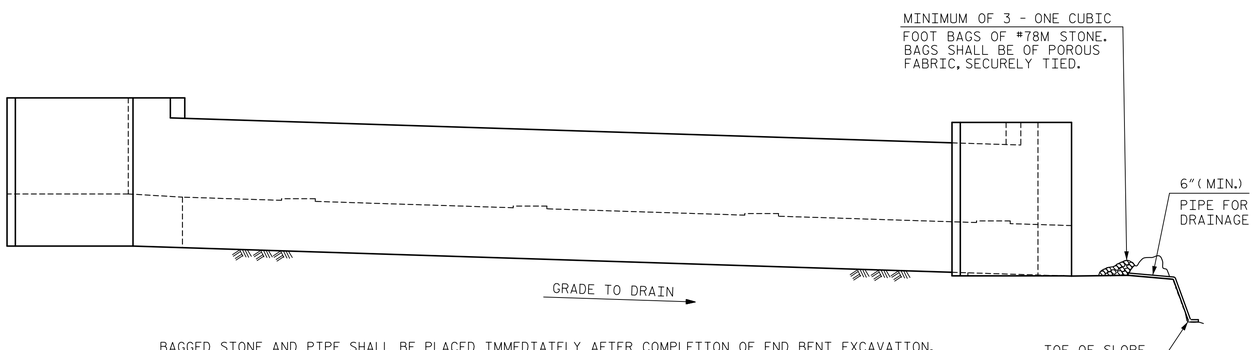


BAGGED STONE AND PIPE SHALL BE PLACED IMMEDIATELY AFTER COMPLETION OF END BENT EXCAVATION. PIPE MAY BE EITHER CONCRETE, CORRUGATED STEEL, CORRUGATED ALUMINUM ALLOY OR CORRUGATED PLASTIC. PERFORATED PIPE WILL NOT BE ALLOWED.

BAGGED STONE SHALL REMAIN IN PLACE UNTIL THE ENGINEER DIRECTS THAT IT BE REMOVED. THE CONTRACTOR SHALL REMOVE AND DISPOSE OF SILT ACCUMULATIONS AT BAGGED STONE WHEN SO DIRECTED BY THE ENGINEER. BAGS SHALL BE REMOVED AND REPLACED WHENEVER THE ENGINEER DETERMINES THAT THEY HAVE DETERIORATED AND LOST THEIR EFFECTIVENESS.

NO SEPARATE PAYMENT WILL BE MADE FOR THIS WORK AND THE ENTIRE COST OF THIS WORK SHALL BE INCLUDED IN THE UNIT CONTRACT PRICE FOR THE SEVERAL PAY ITEMS.

TEMPORARY DRAINAGE AT END BENT 1

PROJECT NO. R-1015

CRAVEN COUNTY

STATION: POC STA. 138+31.09 -L-

SHEET 3 OF 3

STATE OF NORTH CAROLINA
DEPARTMENT OF TRANSPORTATION
RALEIGH

SUBSTRUCTURE

END BENT 1

LEFT LANE

NORTH CAROLINA PROFESSIONAL SEAL 046632 2/25/2019 ENGINEER JAMES P. GREGG

DocuSigned by: James P. Gregg

DOCUMENT NOT CONSIDERED FINAL UNLESS ALL SIGNATURES COMPLETED

HNTB NORTH CAROLINA, P.C.
NC License No. C-1554
343 E. Six Forks Rd., Suite 200, Raleigh, N.C. 27609

DRAWN BY B. NEUPANE DATE 10/18
CHECKED BY E. JOWZA DATE 10/18
DESIGN ENGINEER OF RECORD J. GREGG DATE 10/18

DWG. NO. 32

| REVISIONS | | | | | | SHEET NO. |
|---|---|---|---|---|---|---|
| NO. | BY | DATE | NO. | BY | DATE | S03-32 |
| 1 | | | 3 | | | TOTAL SHEETS |
| 2 | | | 4 | | | 46 |

DocuSign Envelope ID: 5B67B2BB-4DD6-4E6E-81A0-C0FE3C5CF566

NOTES:

ALL DIMENSIONS SHOWN ARE PARALLEL OR NORMAL TO ℄ BENT UNLESS NOTED.

STIRRUPS IN CAP MAY BE SHIFTED AS NECESSARY TO CLEAR ANCHOR BOLTS.

HOOKS ON "V" BARS MAY BE TURNED AS NECESSARY FOR PLACING REINFORCING STEEL.

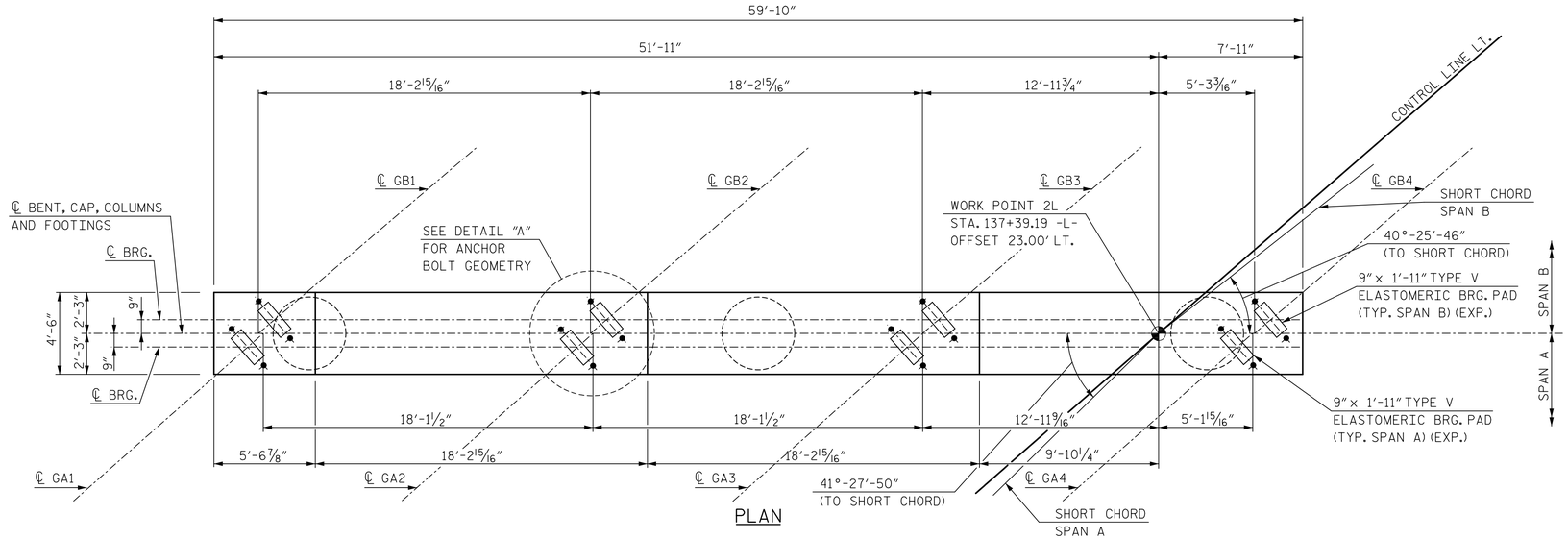


PLAN

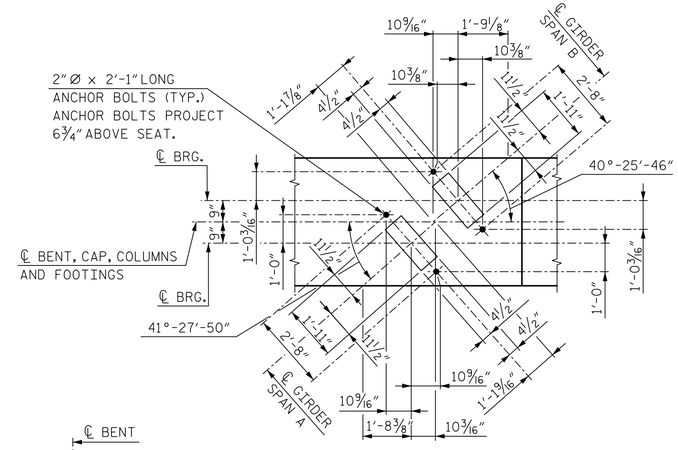


DETAIL A

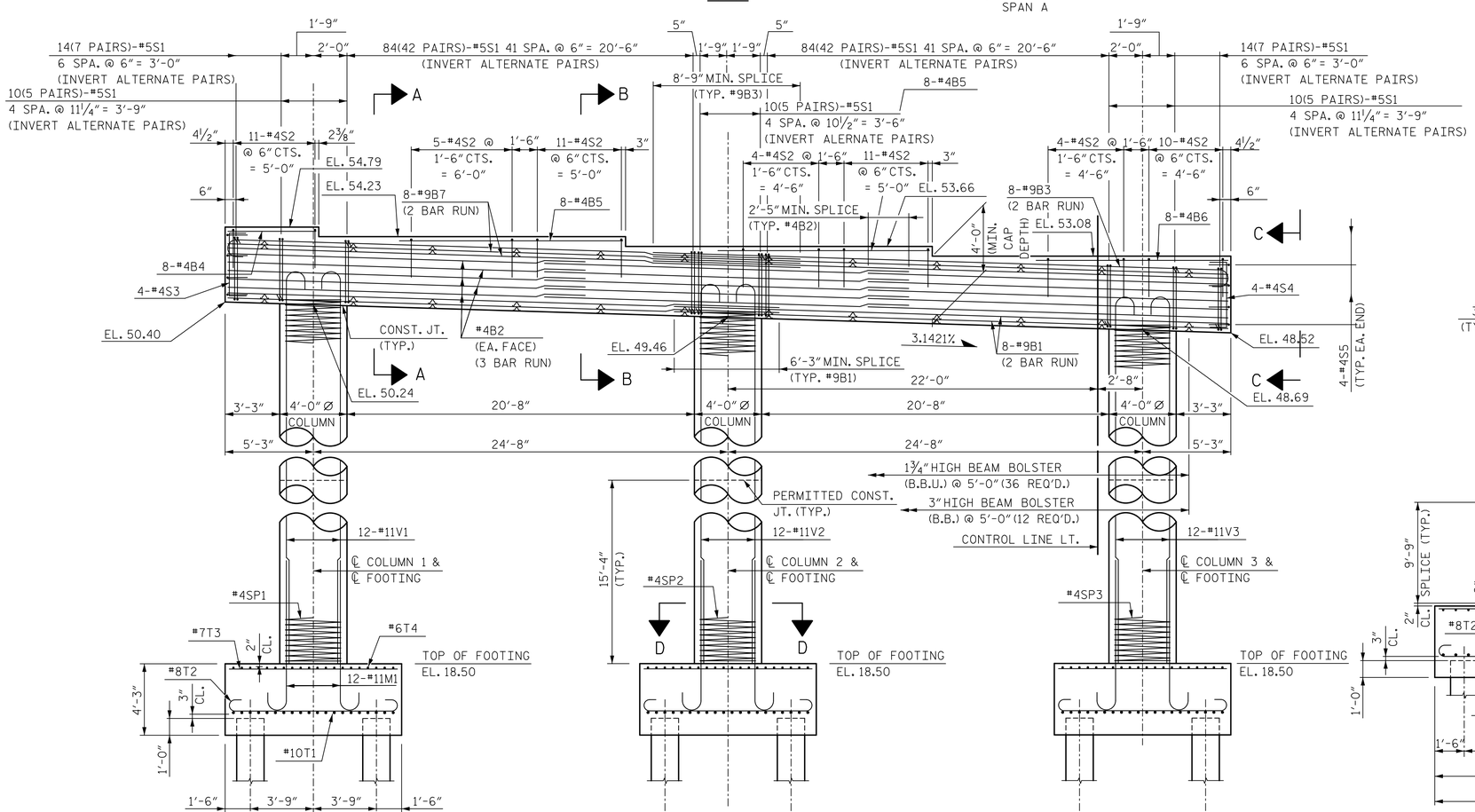


ELEVATION

(FOOTING REINFORCING AND DIMENSIONS ARE TYPICAL FOR EACH FOOTING)

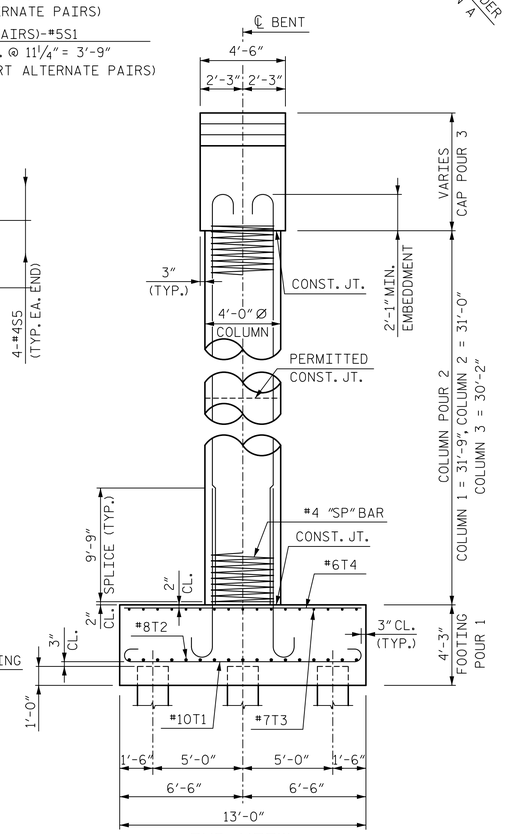


END VIEW

DocuSigned by: James P. Gregg
4BBFE024AB9C404...

NORTH CAROLINA PROFESSIONAL SEAL 046632 ENGINEER JAMES P. GREGG

11/20/2018

PROJECT NO. R-1015

CRAVEN COUNTY

STATION: POC STA. 138+31.09 -L-

SHEET 1 OF 2

STATE OF NORTH CAROLINA
DEPARTMENT OF TRANSPORTATION
RALEIGH

SUBSTRUCTURE

BENT 1

LEFT LANE

HNTB NORTH CAROLINA, P.C.
NC License No. C-1554
343 E. Six Forks Rd., Suite 200, Raleigh, N.C. 27609

DRAWN BY A. SMITH DATE 7/18
CHECKED BY B. NEUPANE DATE 9/18
DESIGN ENGINEER OF RECORD J. GREGG DATE 10/18

DWG. NO. 33

| REVISIONS | | | | | | SHEET NO. |
|---|---|---|---|---|---|---|
| NO. | BY | DATE | NO. | BY | DATE | S03-33 |
| 1 | | | 3 | | | TOTAL SHEETS |
| 2 | | | 4 | | | 46 |

DOCUMENT NOT CONSIDERED FINAL UNLESS ALL SIGNATURES COMPLETED

DocuSign Envelope ID: 609DC734-B6DC-4B94-B1D1-420DCB5CA916

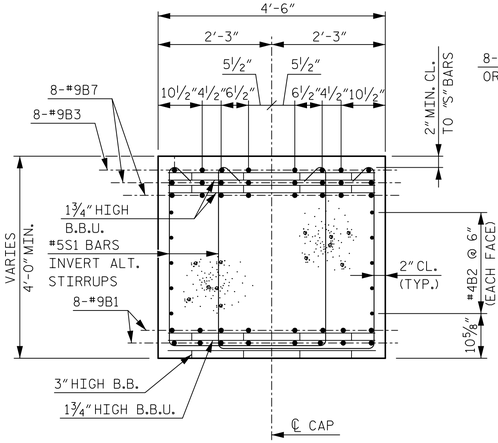


SECTION A-A

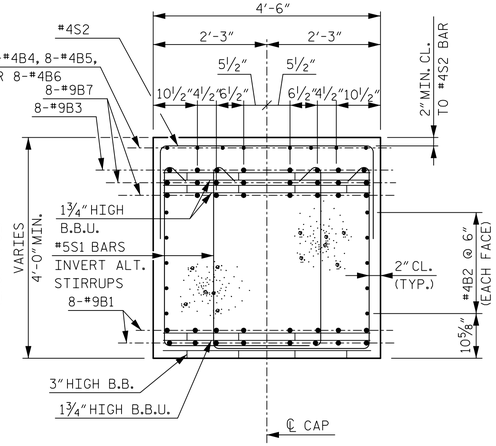


SECTION B-B

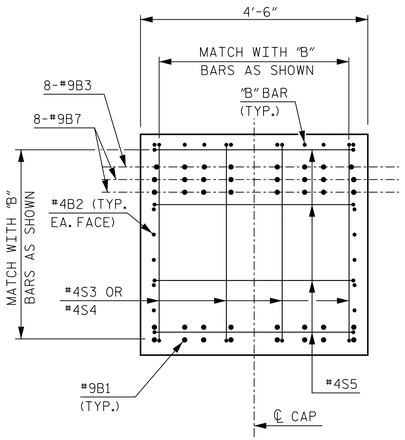


VIEW C-C

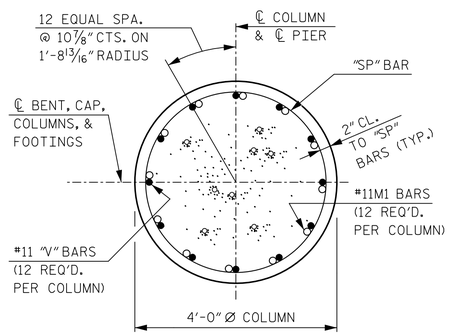


SECTION D-D

## BAR TYPES

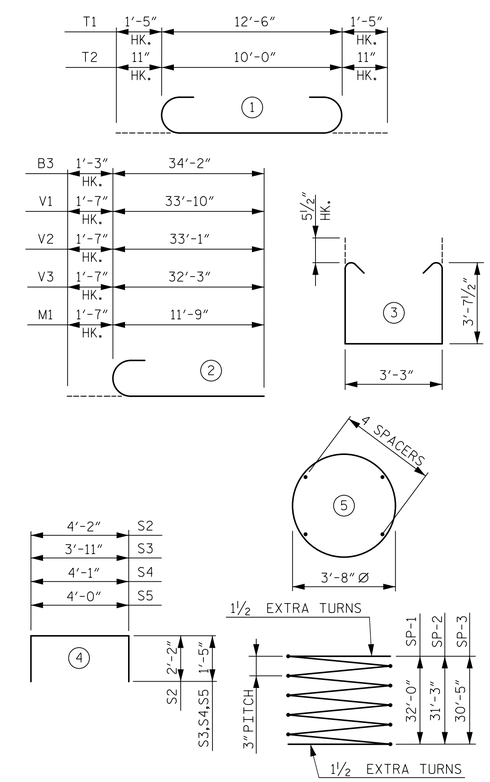


ALL BAR DIMENSIONS ARE OUT TO OUT

✳ THE SP-1, SP-2, AND SP-3 SPIRAL REINFORCING STEEL SHALL BE W20 OR D20 COLD DRAWN WIRE OR #4 PLAIN OR DEFORMED BAR.

## BILL OF REINFORCING

BENT 1

| BAR | NO. | SIZE | TYPE | LENGTH | WEIGHT |
|---|---|---|---|---|---|
| B1 | 32 | 9 | STR | 32'-11" | 3,581 |
| B2 | 30 | 4 | STR | 21'-8" | 434 |
| B3 | 16 | 9 | 2 | 35'-5" | 1,927 |
| B4 | 8 | 4 | STR | 5'-2" | 28 |
| B5 | 16 | 4 | STR | 13'-4" | 143 |
| B6 | 8 | 4 | STR | 11'-5" | 61 |
| B7 | 32 | 9 | STR | 34'-2" | 3,717 |
| M1 | 36 | 11 | 2 | 13'-4" | 2,550 |
| S1 | 214 | 5 | 3 | 11'-5" | 2,548 |
| S2 | 56 | 4 | 4 | 8'-6" | 318 |
| S3 | 4 | 4 | 4 | 6'-9" | 18 |
| S4 | 4 | 4 | 4 | 6'-11" | 18 |
| S5 | 8 | 4 | 4 | 6'-10" | 37 |
| T1 | 60 | 10 | 1 | 15'-6" | 4,002 |
| T2 | 51 | 8 | 1 | 11'-10" | 1,611 |
| T3 | 51 | 7 | STR | 10'-0" | 1,042 |
| T4 | 60 | 6 | STR | 12'-6" | 1,127 |
| V1 | 12 | 11 | 2 | 35'-5" | 2,258 |
| V2 | 12 | 11 | 2 | 34'-8" | 2,210 |
| V3 | 12 | 11 | 2 | 33'-10" | 2,157 |
| SP-1 | 1 | ✳ | 5 | 1509'-6" | 1,008 |
| SP-2 | 1 | ✳ | 5 | 1474'-11" | 985 |
| SP-3 | 1 | ✳ | 5 | 1436'-6" | 960 |

## QUANTITIES

| | | |
|---|---|---|
| REINFORCING STEEL | LBS. | 29,787 |
| SPIRAL COLUMN REINFORCING STEEL | LBS. | 2,953 |
| CLASS A CONCRETE | | |
| FOOTING POUR 1 | CU. YDS. | 64.5 |
| COLUMN POUR 2 | CU. YDS. | 43.3 |
| CAP POUR 3 | CU. YDS. | 42.9 |
| TOTAL | CU. YDS. | 150.7 |
| HP 12X53 STEEL PILES | NO. | 18 |
| | LIN FT. | 1,350 |
| PILE REDRIVES | EA. | 9 |
| PILE DRIVING EQUIPMENT SETUP | EA. | 18 |

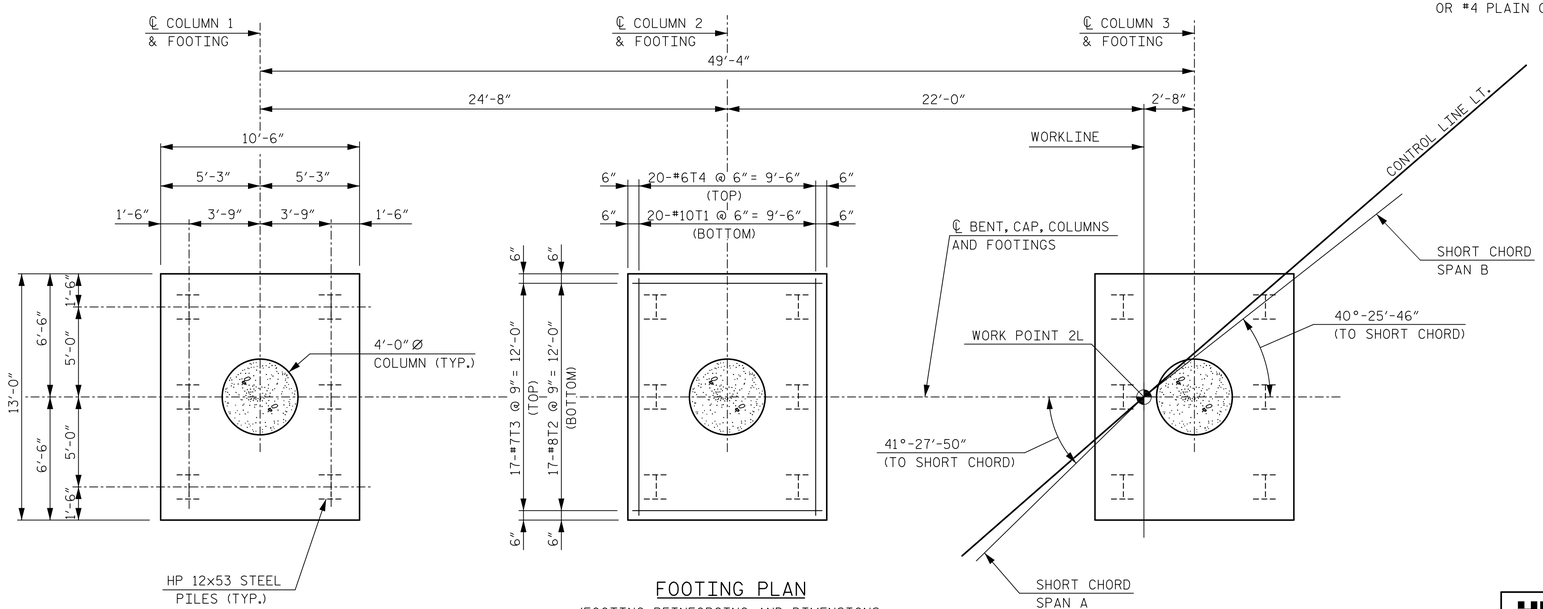


FOOTING PLAN

(FOOTING REINFORCING AND DIMENSIONS ARE TYPICAL FOR EACH FOOTING)

PROJECT NO. R-1015

CRAVEN COUNTY

STATION: POC STA. 138+31.09 -L-

SHEET 2 OF 2

STATE OF NORTH CAROLINA
DEPARTMENT OF TRANSPORTATION
RALEIGH

SUBSTRUCTURE

BENT 1

LEFT LANE

DocuSigned by: James P. Gregg 12/6/2018
NORTH CAROLINA PROFESSIONAL SEAL 046632 ENGINEER JAMES P. GREGG

12/6/2018

DOCUMENT NOT CONSIDERED FINAL UNLESS ALL SIGNATURES COMPLETED

HNTB NORTH CAROLINA, P.C.
NC License No. C-1554
343 E. Six Forks Rd., Suite 200, Raleigh, N.C. 27609

DRAWN BY A. SMITH DATE 7/18
CHECKED BY B. NEUPANE DATE 9/18
DESIGN ENGINEER OF RECORD J. GREGG DATE 10/18

DWG. NO. 34

| REVISIONS | | | | | | SHEET NO. |
|---|---|---|---|---|---|---|
| NO. | BY | DATE | NO. | BY | DATE | S03-34 |
| 1 | | | 3 | | | TOTAL SHEETS |
| 2 | | | 4 | | | 46 |

DocuSign Envelope ID: 609DC734-B6DC-4B94-B1D1-420DCB5CA916

NOTES:

ALL DIMENSIONS SHOWN ARE PARALLEL OR NORMAL TO ℄ BENT UNLESS NOTED.

STIRRUPS IN CAP MAY BE SHIFTED AS NECESSARY TO CLEAR ANCHOR BOLTS.

HOOKS ON "V" BARS MAY BE TURNED AS NECESSARY FOR PLACING REINFORCING STEEL.

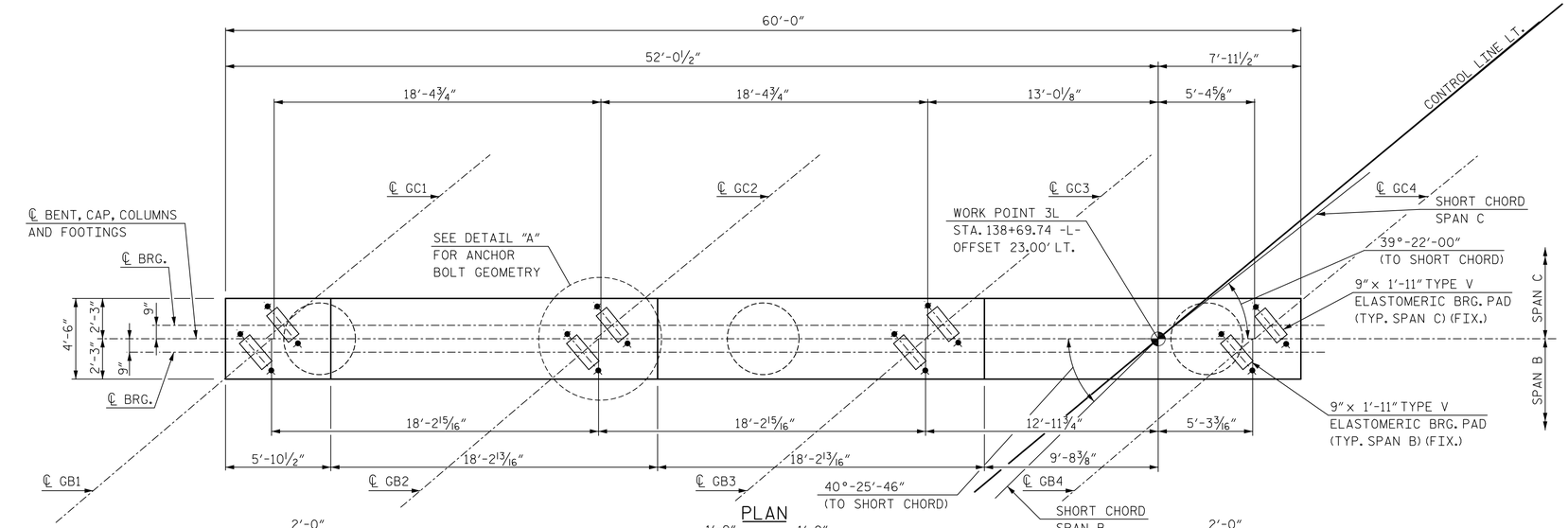


PLAN

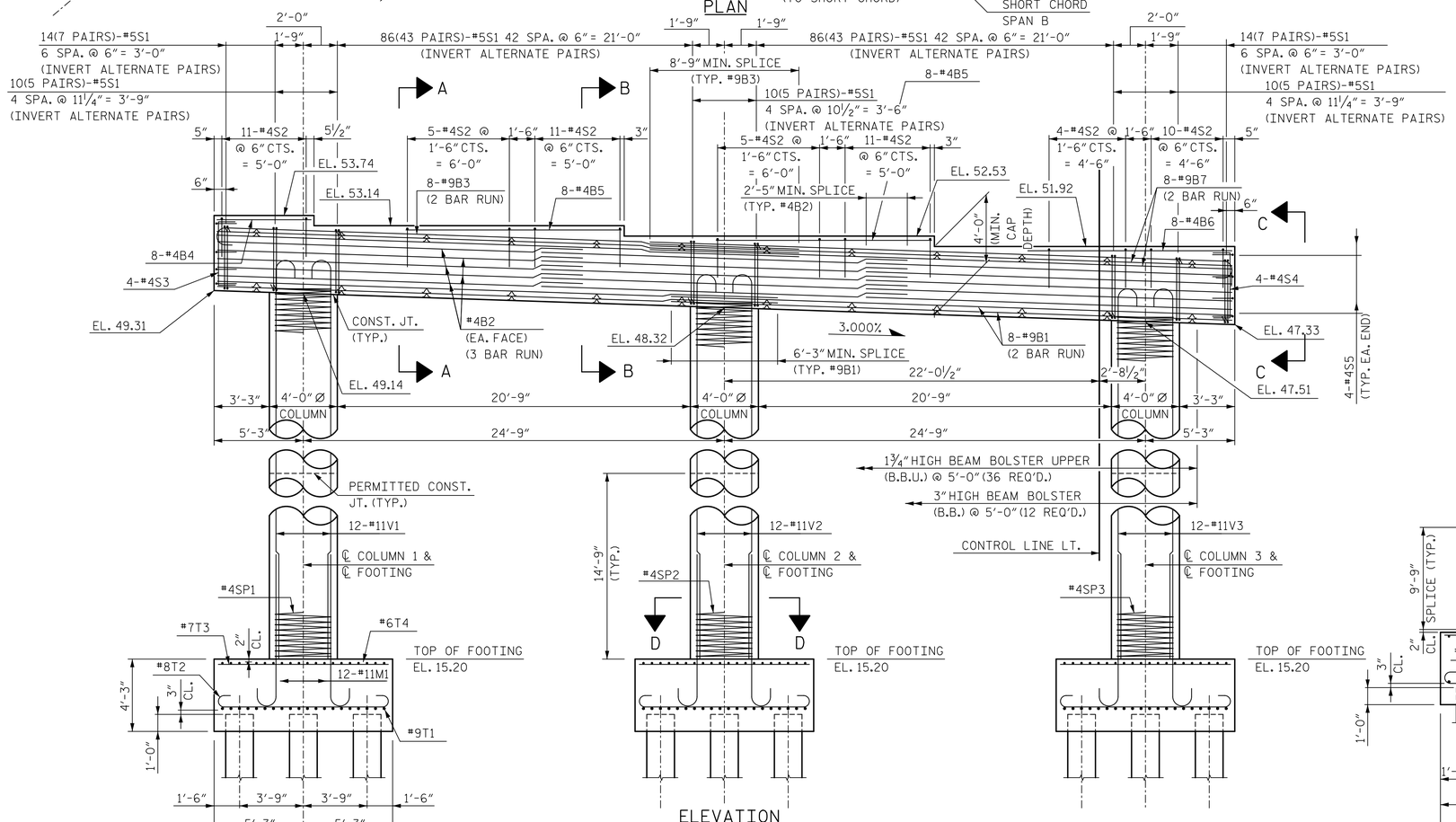


ELEVATION

(FOOTING REINFORCING AND DIMENSIONS ARE TYPICAL FOR EACH FOOTING)

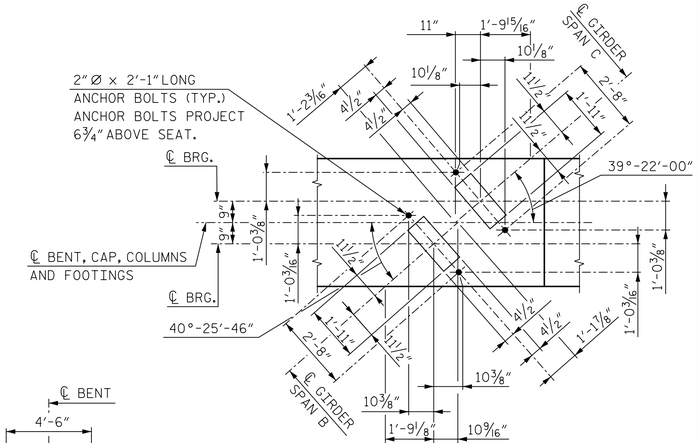


DETAIL A

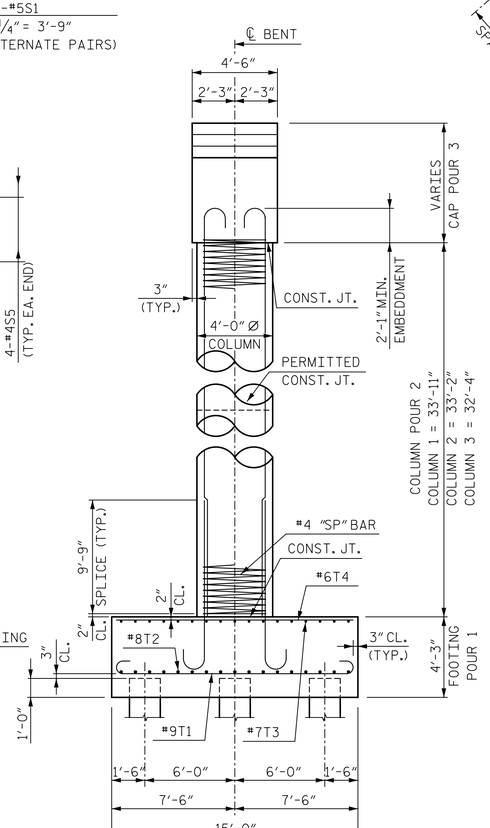


END VIEW

DocuSigned by:
5/29/2018
NORTH CAROLINA PROFESSIONAL SEAL 046632 ENGINEER JAMES P. GREGG
12/6/2018

PROJECT NO. R-1015

CRAVEN COUNTY

STATION: POC STA. 138+31.09 -L-

SHEET 1 OF 2

STATE OF NORTH CAROLINA
DEPARTMENT OF TRANSPORTATION
RALEIGH

SUBSTRUCTURE

BENT 2

LEFT LANE

HNTB NORTH CAROLINA, P.C.
NC License No. C-1554
343 E. Six Forks Rd., Suite 200, Raleigh, N.C. 27609

DRAWN BY A. SMITH DATE 7/18
CHECKED BY B. NEUPANE DATE 9/18
DESIGN ENGINEER OF RECORD J. GREGG DATE 10/18

DWG. NO. 35

DOCUMENT NOT CONSIDERED FINAL UNLESS ALL SIGNATURES COMPLETED

| REVISIONS | | | | | | SHEET NO. |
|---|---|---|---|---|---|---|
| NO. | BY | DATE | NO. | BY | DATE | S03-35 |
| 1 | | | 3 | | | TOTAL SHEETS |
| 2 | | | 4 | | | 46 |

DocuSign Envelope ID: 609DC734-B6DC-4B94-B1D1-420DCB5CA916

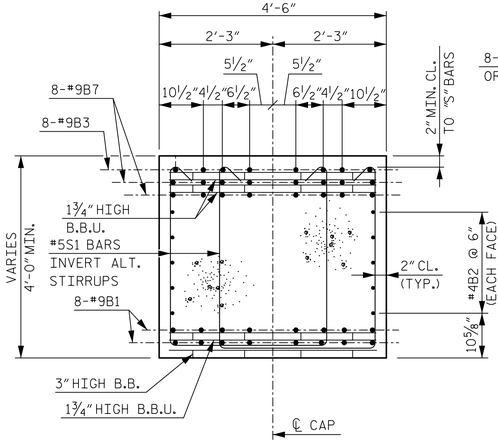


SECTION A-A

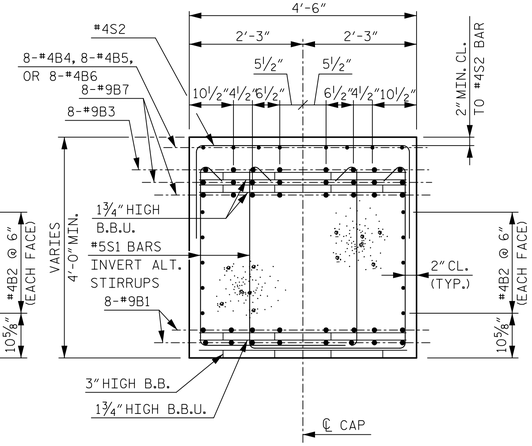


SECTION B-B

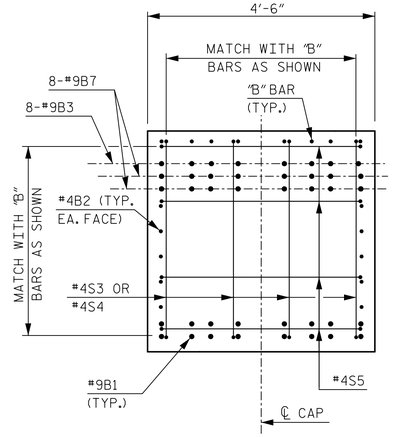


VIEW C-C

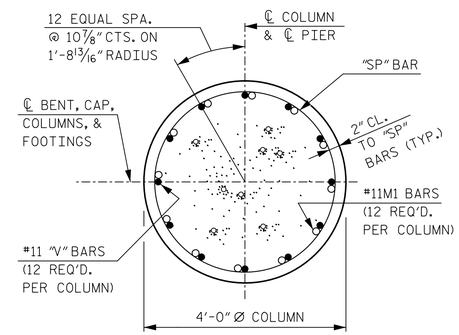


SECTION D-D

## BAR TYPES

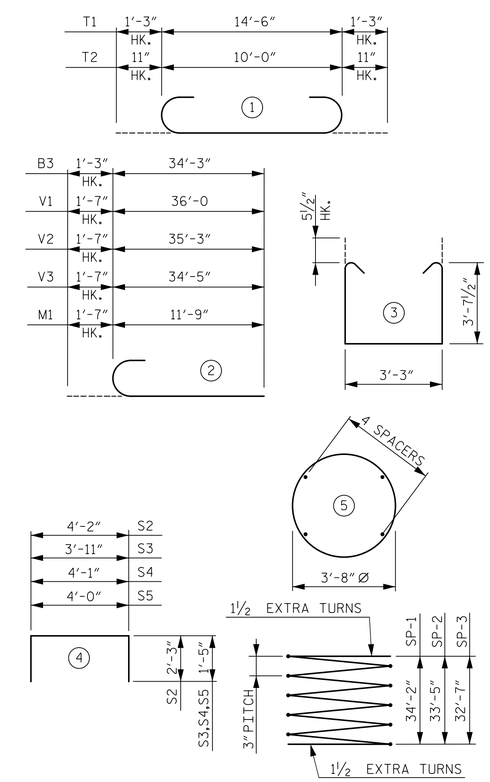


ALL BAR DIMENSIONS ARE OUT TO OUT

✳ THE SP-1, SP-2, AND SP-3 SPIRAL REINFORCING STEEL SHALL BE W20 OR D20 COLD DRAWN WIRE OR #4 PLAIN OR DEFORMED BAR.

## BILL OF REINFORCING

BENT 2

| BAR | NO. | SIZE | TYPE | LENGTH | WEIGHT |
|---|---|---|---|---|---|
| B1 | 32 | 9 | STR | 33'-0" | 3,590 |
| B2 | 30 | 4 | STR | 21'-8" | 434 |
| B3 | 16 | 9 | 2 | 35'-6" | 1,931 |
| B4 | 8 | 4 | STR | 5'-6" | 29 |
| B5 | 16 | 4 | STR | 13'-0" | 139 |
| B6 | 8 | 4 | STR | 12'-0" | 64 |
| B7 | 32 | 9 | STR | 34'-3" | 3,726 |
| M1 | 36 | 11 | 2 | 13'-4" | 2,550 |
| S1 | 218 | 5 | 3 | 11'-5" | 2,596 |
| S2 | 57 | 4 | 4 | 8'-8" | 330 |
| S3 | 4 | 4 | 4 | 6'-9" | 18 |
| S4 | 4 | 4 | 4 | 6'-11" | 18 |
| S5 | 8 | 4 | 4 | 6'-10" | 37 |
| T1 | 60 | 9 | 1 | 17'-0" | 3,468 |
| T2 | 51 | 8 | 1 | 11'-10" | 1,611 |
| T3 | 51 | 7 | STR | 10'-0" | 1,042 |
| T4 | 60 | 6 | STR | 12'-6" | 1,127 |
| V1 | 12 | 11 | 2 | 37'-7" | 2,396 |
| V2 | 12 | 11 | 2 | 36'-10" | 2,348 |
| V3 | 12 | 11 | 2 | 36'-0" | 2,295 |
| SP-1 | 1 | ✳ | 5 | 1609'-4" | 1,075 |
| SP-2 | 1 | ✳ | 5 | 1574'-10" | 1,052 |
| SP-3 | 1 | ✳ | 5 | 1536'-5" | 1,026 |

## QUANTITIES

| | | |
|---|---|---|
| REINFORCING STEEL | LBS. | 29,749 |
| SPIRAL COLUMN REINFORCING STEEL | LBS. | 3,153 |
| CLASS A CONCRETE | | |
| FOOTING POUR 1 | CU. YDS. | 74.4 |
| COLUMN POUR 2 | CU. YDS. | 46.2 |
| CAP POUR 3 | CU. YDS. | 43.4 |
| TOTAL | CU. YDS. | 164.0 |
| HP 12x53 STEEL PILES | NO. | 24 |
| | LIN FT. | 1,680 |
| PILE REDRIVES | EA. | 12 |
| PILE DRIVING EQUIPMENT SETUP | EA. | 24 |

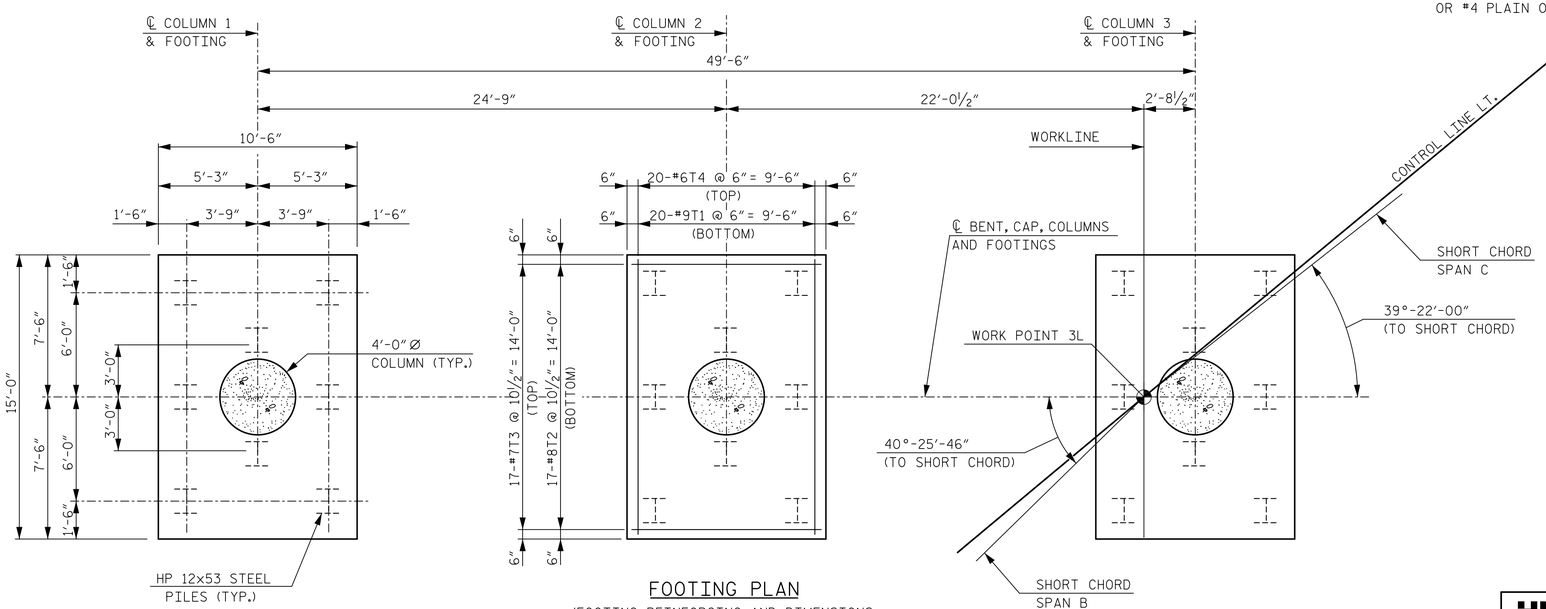


FOOTING PLAN

(FOOTING REINFORCING AND DIMENSIONS ARE TYPICAL FOR EACH FOOTING)

PROJECT NO. R-1015

CRAVEN COUNTY

STATION: POC STA. 138+31.09 -L-

SHEET 2 OF 2

STATE OF NORTH CAROLINA
DEPARTMENT OF TRANSPORTATION
RALEIGH

SUBSTRUCTURE

BENT 2

LEFT LANE

DocuSigned by: James P. Gregg

NORTH CAROLINA PROFESSIONAL SEAL 046632 ENGINEER JAMES P. GREGG

12/6/2018

HNTB

HNTB NORTH CAROLINA, P.C.
NC License No. C-1554
343 E. Six Forks Rd., Suite 200, Raleigh, N.C. 27609

DRAWN BY A. SMITH DATE 7/18
CHECKED BY B. NEUPANE DATE 9/18
DESIGN ENGINEER OF RECORD J. GREGG DATE 10/18

DWG. NO. 36

REVISIONS

| NO. | BY | DATE | NO. | BY | DATE |
|---|---|---|---|---|---|
| 1 | | | 3 | | |
| 2 | | | 4 | | |

SHEET NO. S03-36

TOTAL SHEETS 46

**DOCUMENT NOT CONSIDERED FINAL UNLESS ALL SIGNATURES COMPLETED**

DocuSign Envelope ID: 5B67B2BB-4DD6-4E6E-81A0-C0FE3C5CF566

NOTES:

ALL DIMENSIONS SHOWN ARE PARALLEL OR NORMAL TO ℄ BENT UNLESS NOTED.

STIRRUPS IN CAP MAY BE SHIFTED AS NECESSARY TO CLEAR ANCHOR BOLTS.

HOOKS ON "V" BARS MAY BE TURNED AS NECESSARY FOR PLACING REINFORCING STEEL.

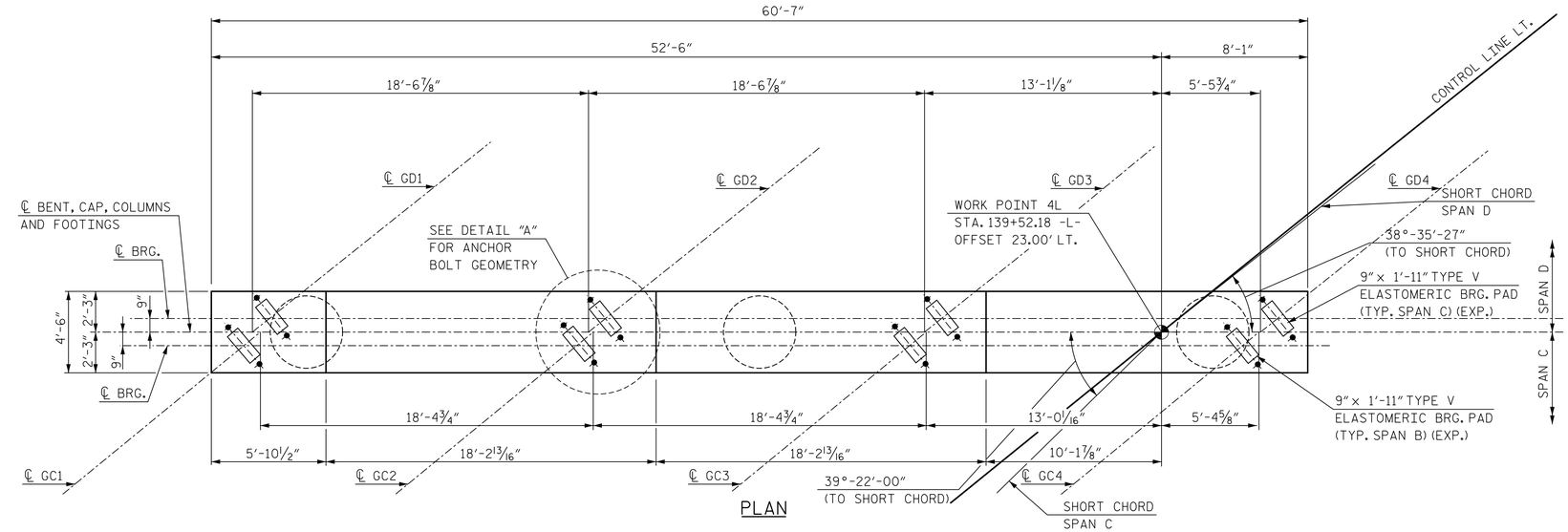


PLAN

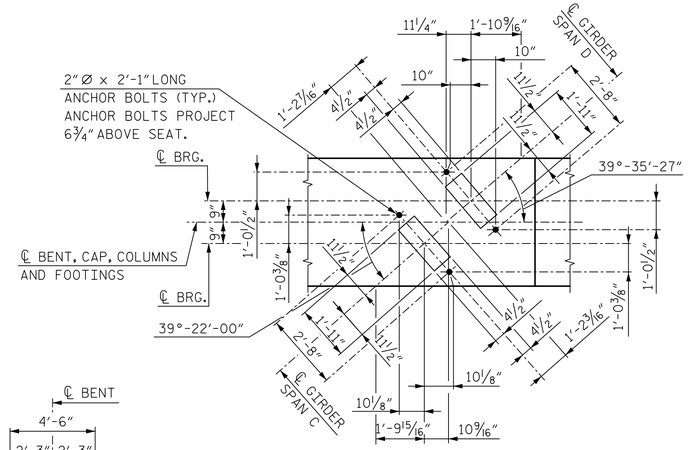


DETAIL A

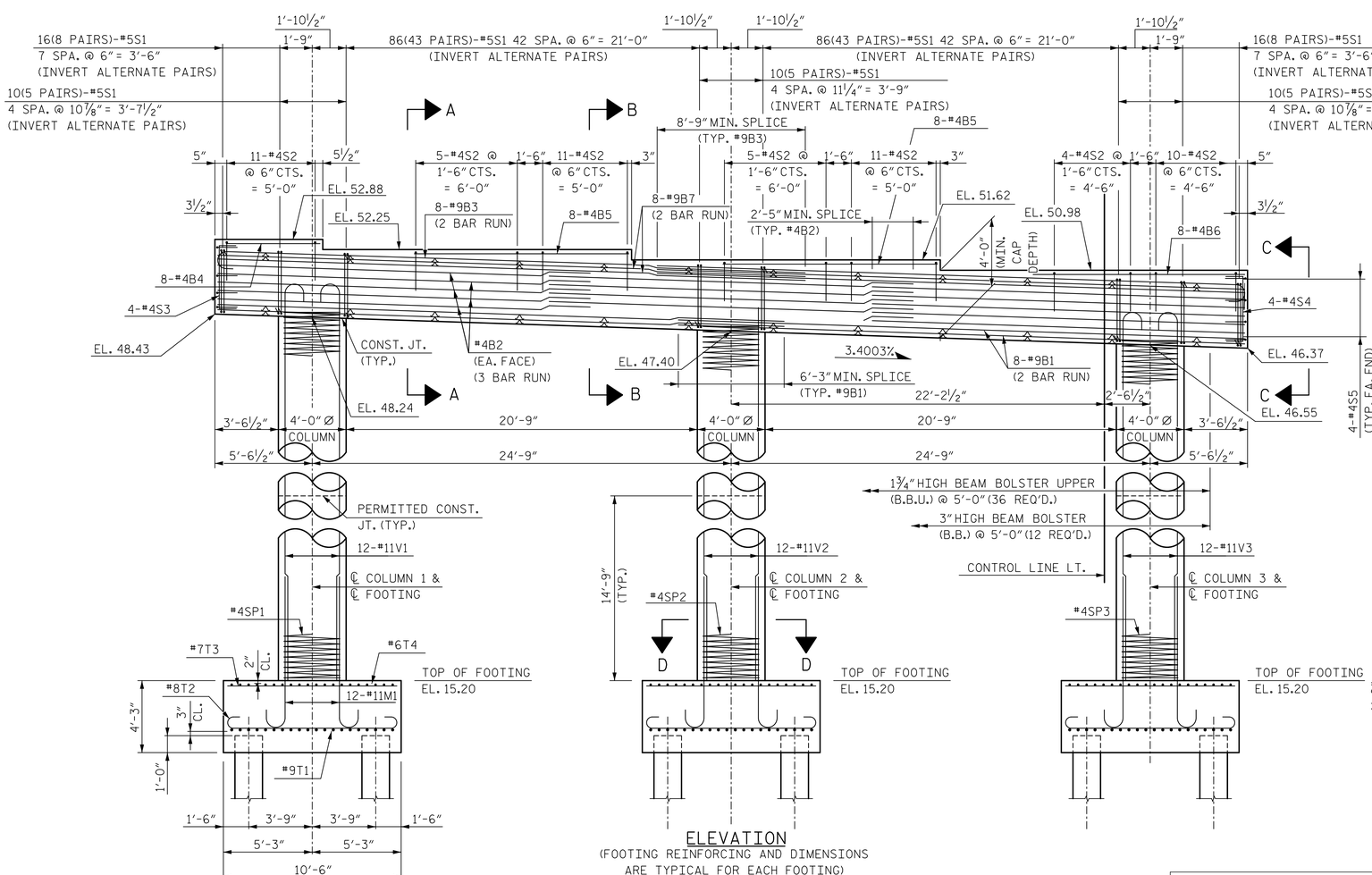


ELEVATION

(FOOTING REINFORCING AND DIMENSIONS ARE TYPICAL FOR EACH FOOTING)

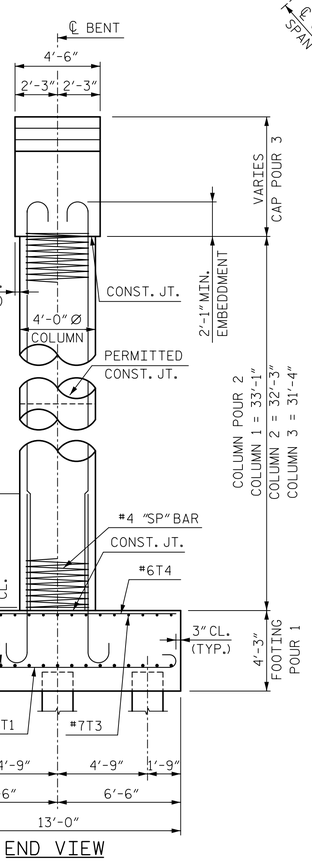


END VIEW

DocuSigned by: James P. Gregg 8F0FE024AB9C404...

NORTH CAROLINA PROFESSIONAL SEAL 046632 ENGINEER JAMES P. GREGG

11/20/2018

PROJECT NO. R-1015

CRAVEN COUNTY

STATION: POC STA. 138+31.09 -L-

SHEET 1 OF 2

STATE OF NORTH CAROLINA
DEPARTMENT OF TRANSPORTATION
RALEIGH

SUBSTRUCTURE

BENT 3

LEFT LANE

HNTB NORTH CAROLINA, P.C.
NC License No. C-1554
343 E. Six Forks Rd., Suite 200, Raleigh, N.C. 27609

DRAWN BY A. SMITH DATE 7/18
CHECKED BY B. NEUPANE DATE 9/18
DESIGN ENGINEER OF RECORD J. GREGG DATE 10/18

DWG. NO. 37

| REVISIONS | | | | | | SHEET NO. |
|---|---|---|---|---|---|---|
| NO. | BY | DATE | NO. | BY | DATE | S03-37 |
| 1 | | | 3 | | | TOTAL SHEETS |
| 2 | | | 4 | | | 46 |

DOCUMENT NOT CONSIDERED FINAL UNLESS ALL SIGNATURES COMPLETED

DocuSign Envelope ID: 609DC734-B6DC-4B94-B1D1-420DCB5CA916

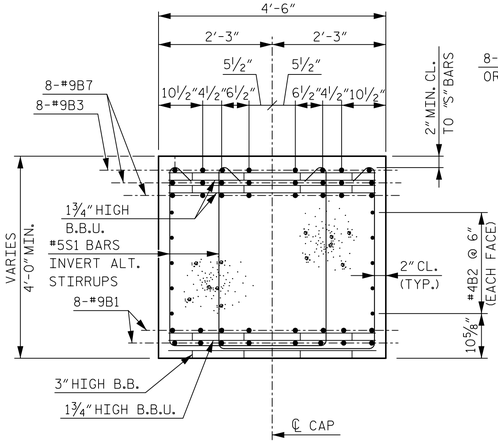


SECTION A-A

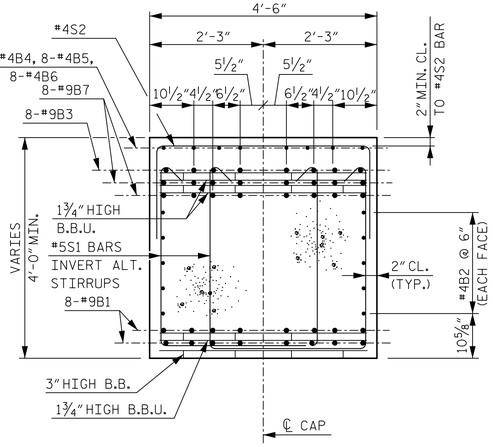


SECTION B-B

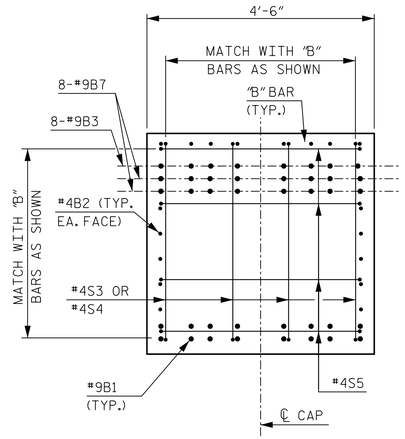


VIEW C-C

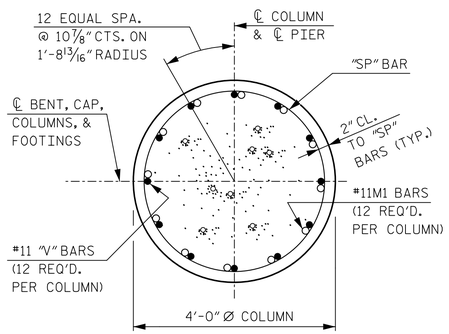


SECTION D-D

## BAR TYPES

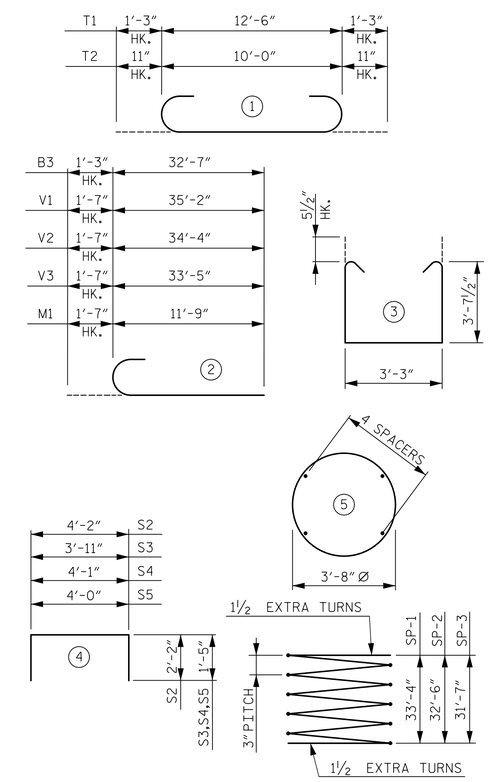


ALL BAR DIMENSIONS ARE OUT TO OUT

✳ THE SP-1, SP-2, AND SP-3 SPIRAL REINFORCING STEEL SHALL BE W20 OR D20 COLD DRAWN WIRE OR #4 PLAIN OR DEFORMED BAR.

## BILL OF REINFORCING

BENT 1

| BAR | NO. | SIZE | TYPE | LENGTH | WEIGHT |
|---|---|---|---|---|---|
| B1 | 32 | 9 | STR | 33'-4" | 3,627 |
| B2 | 30 | 4 | STR | 21'-10" | 438 |
| B3 | 16 | 9 | 2 | 35'-10" | 1,949 |
| B4 | 8 | 4 | STR | 5'-6" | 29 |
| B5 | 16 | 4 | STR | 13'-0" | 139 |
| B6 | 8 | 4 | STR | 12'-6" | 67 |
| B7 | 32 | 9 | STR | 32'-7" | 3,545 |
| M1 | 36 | 11 | 2 | 13'-4" | 2,550 |
| S1 | 222 | 5 | 3 | 11'-5" | 2,643 |
| S2 | 57 | 4 | 4 | 8'-6" | 324 |
| S3 | 4 | 4 | 4 | 6'-9" | 18 |
| S4 | 4 | 4 | 4 | 6'-11" | 18 |
| S5 | 8 | 4 | 4 | 6'-10" | 37 |
| T1 | 60 | 9 | 1 | 15'-0" | 3,060 |
| T2 | 51 | 8 | 1 | 11'-10" | 1,611 |
| T3 | 51 | 7 | STR | 10'-0" | 1,042 |
| T4 | 60 | 6 | STR | 12'-6" | 1,127 |
| V1 | 12 | 11 | 2 | 36'-9" | 2,343 |
| V2 | 12 | 11 | 2 | 35'-11" | 2,290 |
| V3 | 12 | 11 | 2 | 35'-0" | 2,231 |
| SP-1 | 1 | ✳ | 5 | 1571'-0" | 1,049 |
| SP-2 | 1 | ✳ | 5 | 1532'-7" | 1,024 |
| SP-3 | 1 | ✳ | 5 | 1490'-4" | 996 |

## QUANTITIES

| | | |
|---|---|---|
| REINFORCING STEEL | LBS. | 29,088 |
| SPIRAL COLUMN REINFORCING STEEL | LBS. | 3,069 |
| CLASS A CONCRETE | | |
| FOOTING POUR 1 | CU. YDS. | 64.5 |
| COLUMN POUR 2 | CU. YDS. | 45.0 |
| CAP POUR 3 | CU. YDS. | 43.9 |
| TOTAL | CU. YDS. | 153.4 |
| HP12x53 STEEL PILES | NO. | 18 |
| | LIN FT. | 1,170 |
| PILE REDRIVES | EA. | 9 |
| PILE DRIVING EQUIPMENT SETUP | EA. | 18 |

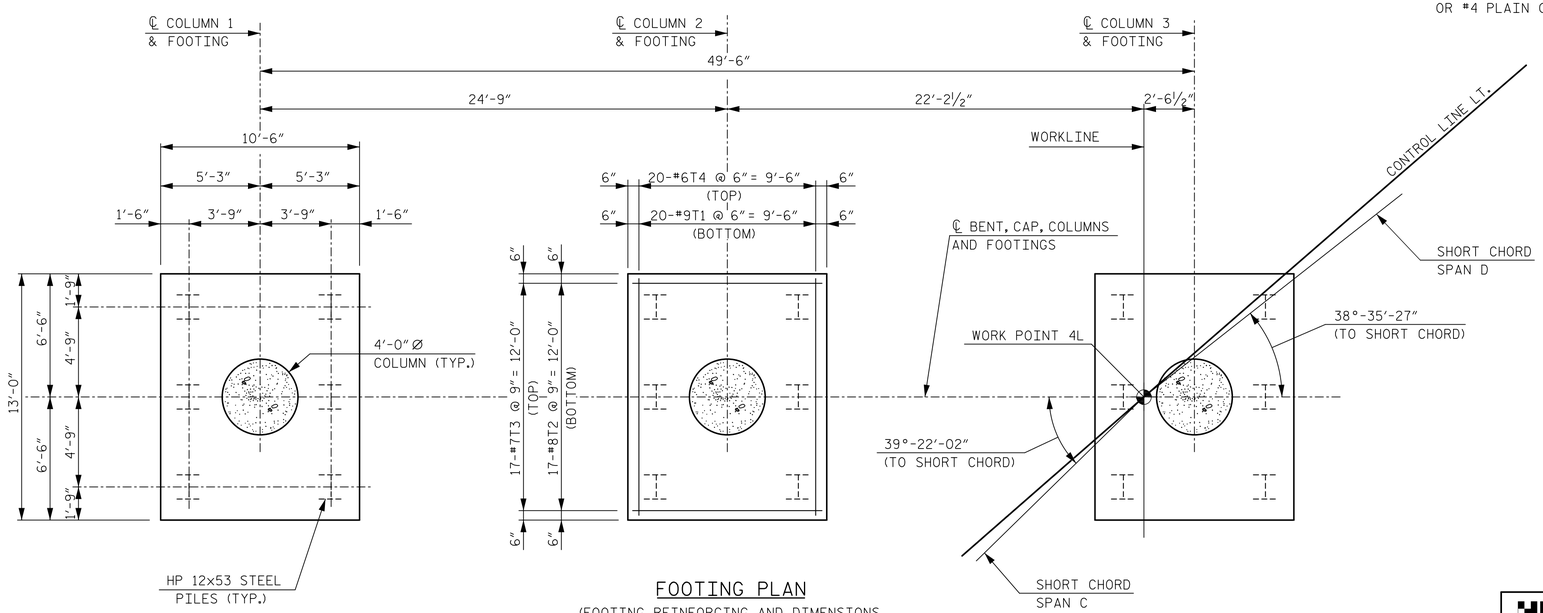


FOOTING PLAN

(FOOTING REINFORCING AND DIMENSIONS ARE TYPICAL FOR EACH FOOTING)

PROJECT NO. R-1015

CRAVEN COUNTY

STATION: POC STA. 138+31.09 -L-

SHEET 2 OF 2

STATE OF NORTH CAROLINA
DEPARTMENT OF TRANSPORTATION
RALEIGH

SUBSTRUCTURE

BENT 3

LEFT LANE

DocuSigned by: P. Gregg

NORTH CAROLINA PROFESSIONAL SEAL 046632 ENGINEER JAMES P. GREGG

12/6/2018

HNTB NORTH CAROLINA, P.C.
NC License No. C-1554
343 E. Six Forks Rd., Suite 200, Raleigh, N.C. 27609

DRAWN BY A. SMITH DATE 7/18
CHECKED BY B. NEUPANE DATE 9/18
DESIGN ENGINEER OF RECORD J. GREGG DATE 10/18

DWG. NO. 38

REVISIONS

| NO. | BY | DATE | NO. | BY | DATE |
|---|---|---|---|---|---|
| 1 | | | 3 | | |
| 2 | | | 4 | | |

SHEET NO. S03-38

TOTAL SHEETS 46

**DOCUMENT NOT CONSIDERED FINAL UNLESS ALL SIGNATURES COMPLETED**

DocuSign Envelope ID: 5B67B2BB-4DD6-4E6E-81A0-C0FE3C5CF566

NOTES:

FOR NOTES AND PILE SPLICE DETAILS, SEE SHEET 3 OF 3.

FOR WINGWALL DETAILS AND SECTION A-A, SEE SHEET 2 OF 3.

INDICATES 3:12 PILE BATTER IN DIRECTION SHOWN.

| TOP OF PILE ELEVATIONS | |
|---|---|
| PILE | ELEVATION |
| 1 | 50.13 |
| 2 | 49.91 |
| 3 | 49.70 |
| 4 | 49.48 |
| 5 | 49.26 |
| 6 | 49.04 |
| 7 | 48.82 |
| 8 | 48.61 |
| 9 | 48.39 |
| 10 | 48.17 |
| 11 | 47.95 |
| 12 | 47.73 |
| 13 | 47.52 |

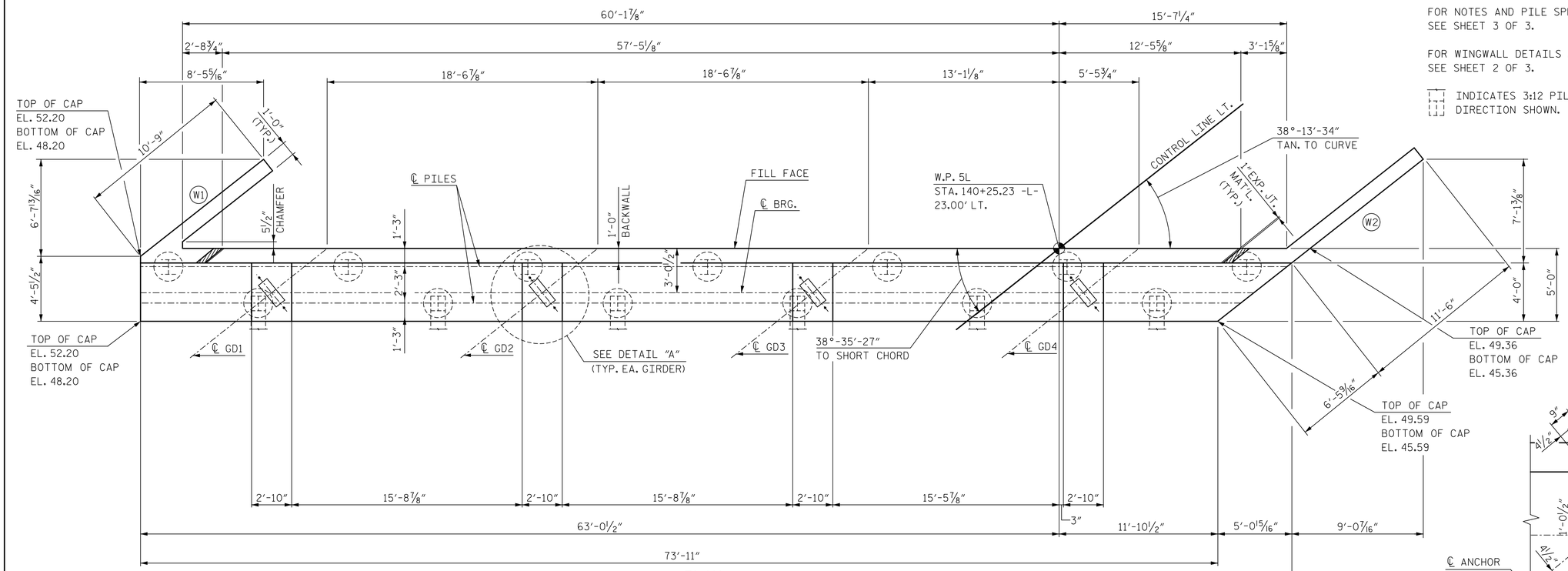


PLAN

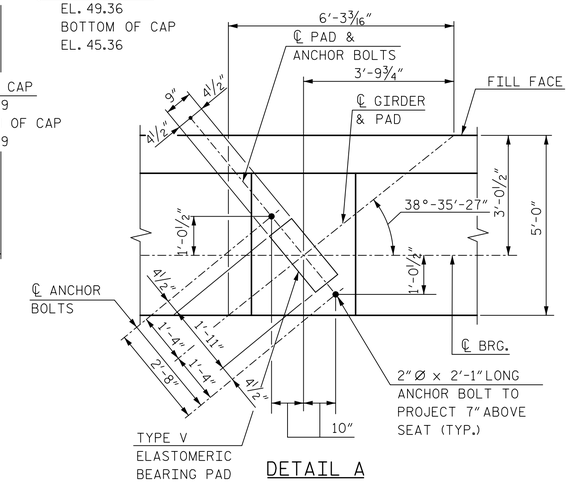


DETAIL A

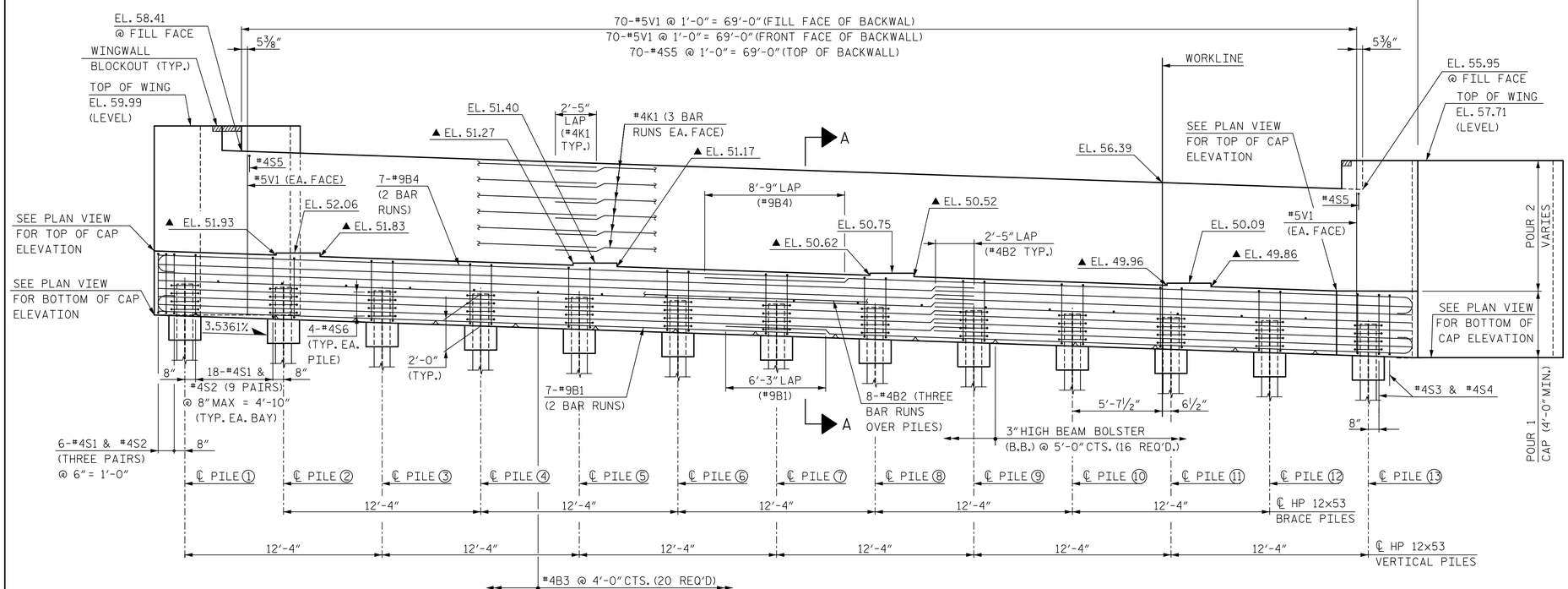


ELEVATION

▲ FOR LOCATION OF ELEVATIONS BETWEEN BRIDGE SEATS, SEE SECTION A-A, SHEET 2 OF 3.

DocuSigned by: James P. Gregg 6BFE024ABBC404...

NORTH CAROLINA PROFESSIONAL SEAL 046632 ENGINEER JAMES P. GREGG

11/20/2018

PROJECT NO. R-1015

CRAVEN COUNTY

STATION: POC STA. 138+31.09 -L-

SHEET 1 OF 3

STATE OF NORTH CAROLINA
DEPARTMENT OF TRANSPORTATION
RALEIGH

SUBSTRUCTURE

END BENT 2

LEFT LANE

HNTB NORTH CAROLINA, P.C.
NC License No. C-1554
343 E. Six Forks Rd., Suite 200, Raleigh, N.C. 27609

DRAWN BY B. NEUPANE DATE 9/18
CHECKED BY E. JOWZA DATE 10/18
DESIGN ENGINEER OF RECORD J. GREGG DATE 10/18

DWG. NO. 39

DOCUMENT NOT CONSIDERED FINAL UNLESS ALL SIGNATURES COMPLETED

| REVISIONS | | | | | | SHEET NO. |
|---|---|---|---|---|---|---|
| NO. | BY | DATE | NO. | BY | DATE | S03-39 |
| 1 | | | 3 | | | TOTAL SHEETS |
| 2 | | | 4 | | | 46 |

DocuSign Envelope ID: 5B67B2BB-4DD6-4E6E-81A0-C0FE3C5CF566

NOTES:

FOR NOTES, SEE SHEET 3 OF 3.
FOR BLOCKOUT IN WINGWALL, SEE SHEET 3 OF 3.

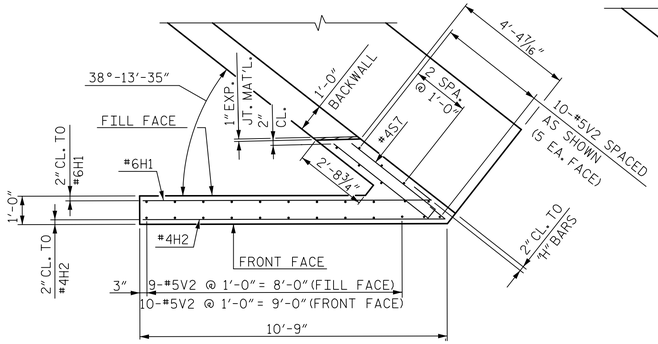


W1 PLAN OF WING

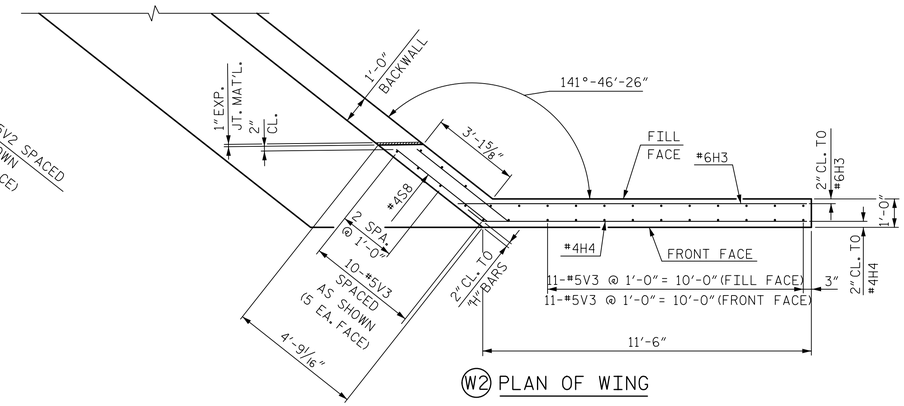


W2 PLAN OF WING

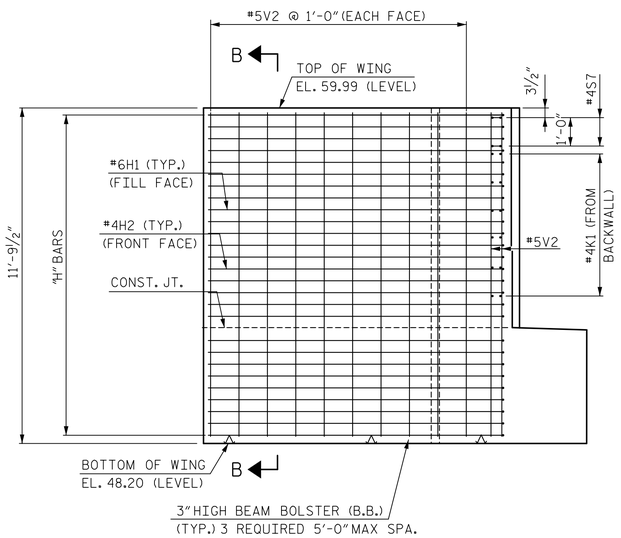


W1 ELEVATION OF WING

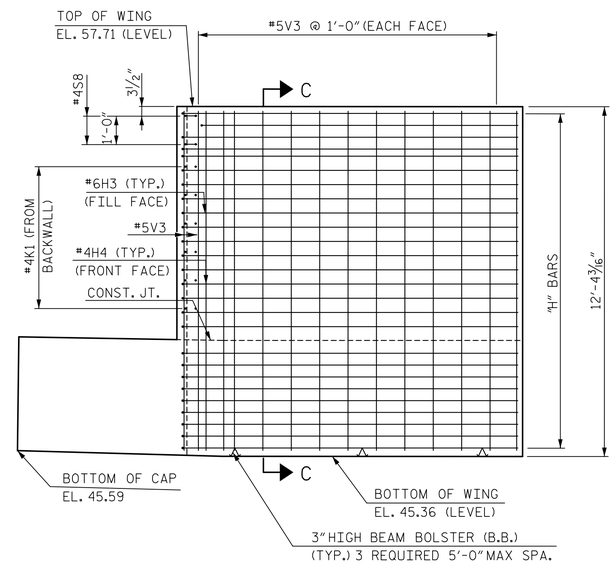


W2 ELEVATION OF WING

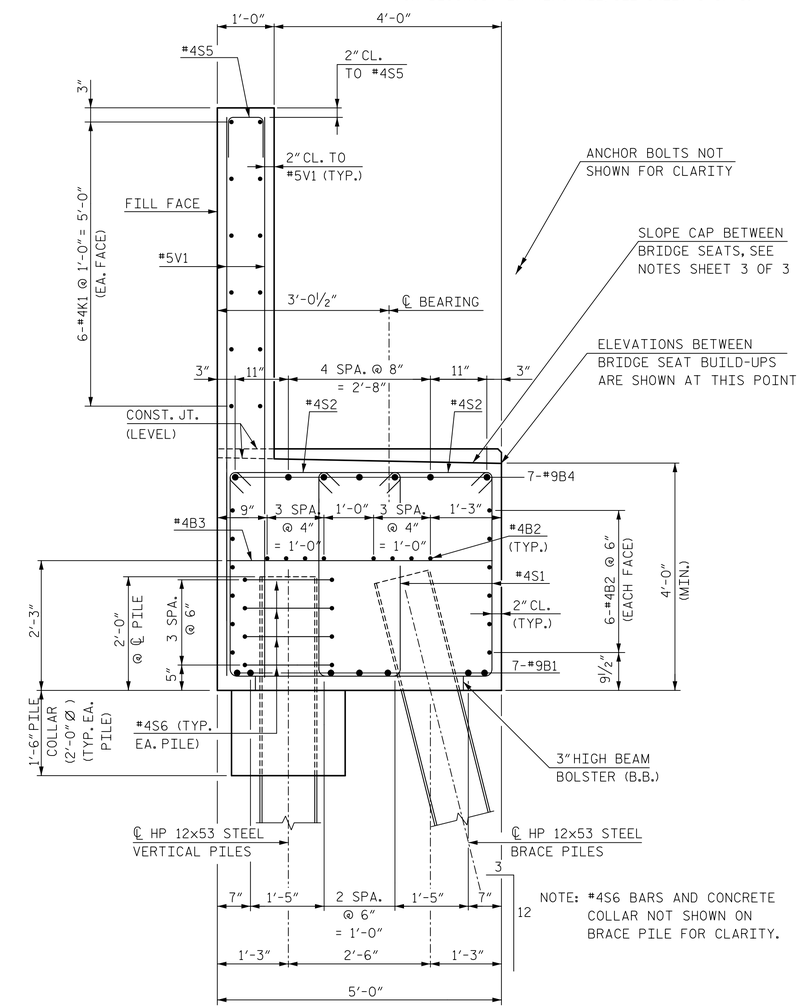


NOTE: #4S6 BARS AND CONCRETE COLLAR NOT SHOWN ON BRACE PILE FOR CLARITY.

SECTION A-A

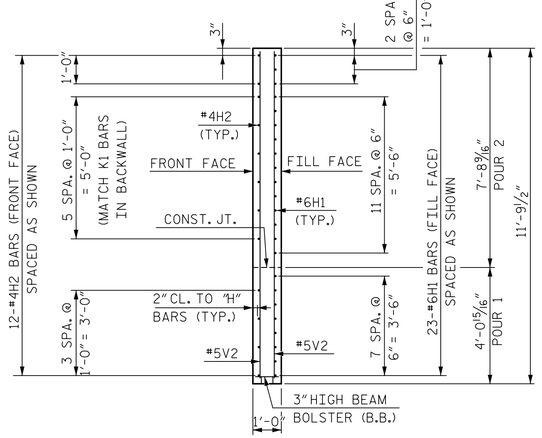


SECTION B-B

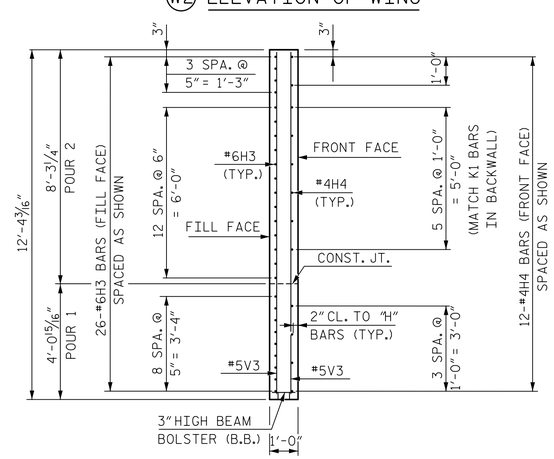


SECTION C-C

PROJECT NO. R-1015

CRAVEN COUNTY

STATION: POC STA. 138+31.09 -L-

SHEET 2 OF 3

STATE OF NORTH CAROLINA
DEPARTMENT OF TRANSPORTATION
RALEIGH

SUBSTRUCTURE

END BENT 2

LEFT LANE

NORTH CAROLINA PROFESSIONAL SEAL 046632 ENGINEER JAMES P. GREGG

DocuSigned by: James P. Gregg 7A0DFEE02AAB9C404...

11/20/2018

HNTB NORTH CAROLINA, P.C.
NC License No. C-1554
343 E. Six Forks Rd., Suite 200, Raleigh, N.C. 27609

DRAWN BY B. NEUPANE DATE 9/18
CHECKED BY E. JOWZA DATE 10/18
DESIGN ENGINEER OF RECORD J. GREGG DATE 10/18

DWG. NO. 40

DOCUMENT NOT CONSIDERED FINAL UNLESS ALL SIGNATURES COMPLETED

| REVISIONS | | | | | | SHEET NO. |
|---|---|---|---|---|---|---|
| NO. | BY | DATE | NO. | BY | DATE | S03-40 |
| 1 | | | 3 | | | TOTAL SHEETS |
| 2 | | | 4 | | | 46 |

DocuSign Envelope ID: 609DC734-B6DC-4B94-B1D1-420DCB5CA916

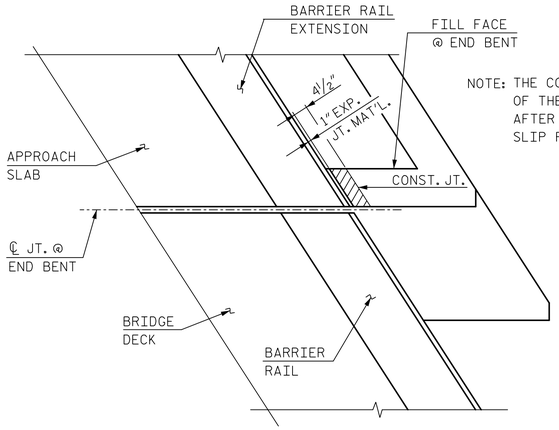


NOTE: THE CONCRETE IN THE SHADED AREA OF THE WING SHALL BE POURED AFTER BARRIER RAILS ARE CAST IF SLIP FORMING IS USED.

PLAN

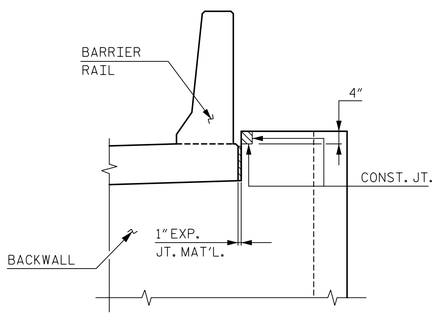


ELEVATION

BLOCKOUT IN WINGWALL

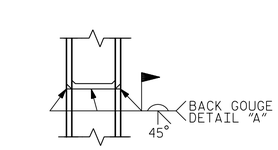


*PILE VERTICAL

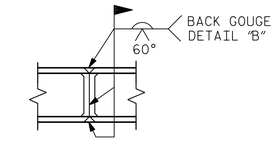


*PILE HORIZONTAL OR VERTICAL

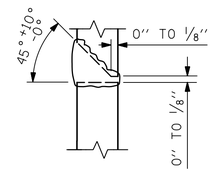


DETAIL "A"

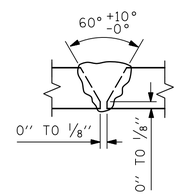


DETAIL "B"

* POSITION OF PILE DURING WELDING.

## PILE SPLICE DETAILS

NOTES:

STIRRUPS IN CAP MAY BE SHIFTED AS NECESSARY TO CLEAR ANCHOR BOLTS.

BACKWALL SHALL BE PLACED BEFORE APPLYING THE EPOXY PROTECTIVE COATING.

THE TOP SURFACE AREAS OF THE END BENT CAPS SHALL BE CURED IN ACCORDANCE WITH THE STANDARD SPECIFICATIONS EXCEPT THE MEMBRANE CURING COMPOUND METHOD SHALL NOT BE USED.

THE TOP SURFACE OF THE END BENT CAP EXCEPT THE BRIDGE SEAT BUILDUPS SHALL BE SLOPED TRANSVERSELY FROM THE FILL FACE TO THE BACK FACE AT THE RATE OF 2%.

## BAR TYPES

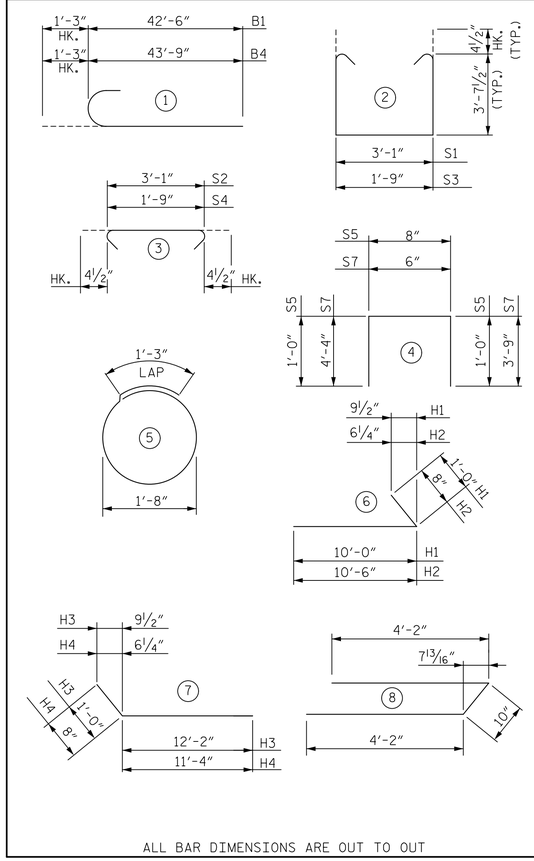


ALL BAR DIMENSIONS ARE OUT TO OUT

## BILL OF REINFORCING

END BENT 2

| BAR | NO. | SIZE | TYPE | LENGTH | WEIGHT |
|---|---|---|---|---|---|
| B1 | 14 | 9 | 1 | 43'-11" | 2,090 |
| B2 | 60 | 4 | STR | 28'-0" | 1,122 |
| B3 | 20 | 4 | STR | 4'-8" | 62 |
| B4 | 14 | 9 | 1 | 45'-2" | 2,150 |
| H1 | 23 | 6 | 6 | 11'-0" | 380 |
| H2 | 12 | 4 | 6 | 11'-2" | 90 |
| H3 | 26 | 6 | 7 | 13'-2" | 514 |
| H4 | 12 | 4 | 7 | 12'-0" | 96 |
| K1 | 36 | 4 | STR | 28'-0" | 673 |
| S1 | 222 | 4 | 2 | 11'-1" | 1,644 |
| S2 | 222 | 4 | 3 | 3'-10" | 568 |
| S3 | 2 | 4 | 2 | 9'-9" | 13 |
| S4 | 2 | 4 | 3 | 2'-6" | 3 |
| S5 | 70 | 4 | 4 | 2'-8" | 125 |
| S6 | 52 | 4 | 5 | 6'-6" | 226 |
| S7 | 2 | 4 | 4 | 8'-7" | 11 |
| S8 | 2 | 4 | 8 | 9'-2" | 12 |
| V1 | 140 | 5 | STR | 9'-11" | 1,448 |
| V2 | 29 | 5 | STR | 11'-4" | 343 |
| V3 | 32 | 5 | STR | 11'-11" | 398 |

## QUANTITIES

| | | |
|---|---|---|
| REINFORCING STEEL | LBS. | 11,968 |
| CLASS "A" CONCRETE BREAKDOWN | | |
| POUR 1 - CAP, COLLARS & BOT. OF WINGS | CU. YDS. | 63.6 |
| POUR 2 - TOP OF WINGS & BACKWALL | CU. YDS. | 25.3 |
| TOTAL | CU. YDS. | 88.9 |
| HP 12x53 STEEL PILES | NO. | 13 |
| | LIN. FT. | 1300 |
| PILE REDRIVES | EA. | 6 |
| PILE DRIVING EQUIPMENT SETUP | EA. | 13 |

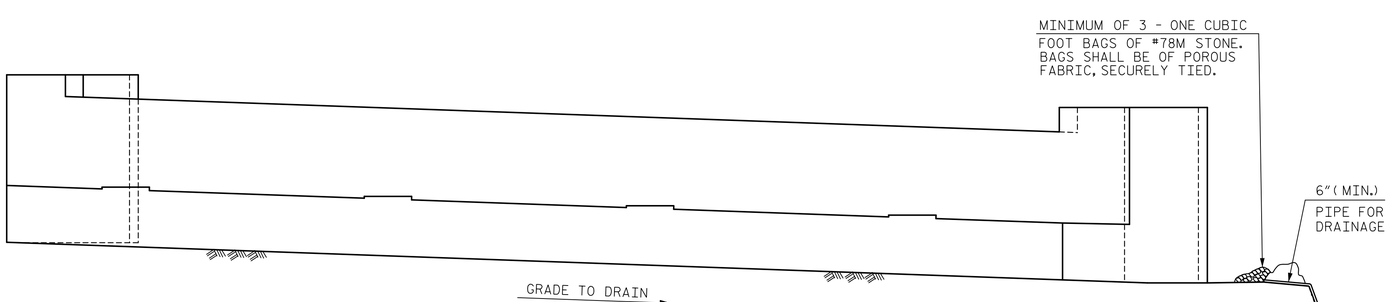


BAGGED STONE AND PIPE SHALL BE PLACED IMMEDIATELY AFTER COMPLETION OF END BENT EXCAVATION. PIPE MAY BE EITHER CONCRETE, CORRUGATED STEEL, CORRUGATED ALUMINUM ALLOY OR CORRUGATED PLASTIC. PERFORATED PIPE WILL NOT BE ALLOWED.

BAGGED STONE SHALL REMAIN IN PLACE UNTIL THE ENGINEER DIRECTS THAT IT BE REMOVED. THE CONTRACTOR SHALL REMOVE AND DISPOSE OF SILT ACCUMULATIONS AT BAGGED STONE WHEN SO DIRECTED BY THE ENGINEER. BAGS SHALL BE REMOVED AND REPLACED WHENEVER THE ENGINEER DETERMINES THAT THEY HAVE DETERIORATED AND LOST THEIR EFFECTIVENESS.

NO SEPARATE PAYMENT WILL BE MADE FOR THIS WORK AND THE ENTIRE COST OF THIS WORK SHALL BE INCLUDED IN THE UNIT CONTRACT PRICE FOR THE SEVERAL PAY ITEMS.

TEMPORARY DRAINAGE AT END BENT 2

PROJECT NO. R-1015
CRAVEN COUNTY
STATION: POC STA. 138+31.09 -L-

SHEET 3 OF 3

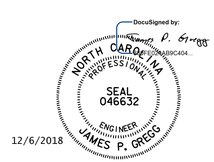


12/6/2018

STATE OF NORTH CAROLINA
DEPARTMENT OF TRANSPORTATION
RALEIGH

SUBSTRUCTURE

END BENT 2

LEFT LANE

HNTB NORTH CAROLINA, P.C.
NC License No. C-1554
343 E. Six Forks Rd., Suite 200, Raleigh, N.C. 27609

DRAWN BY B. NEUPANE DATE 9/18
CHECKED BY E. JOWZA DATE 10/18
DESIGN ENGINEER OF RECORD J. GREGG DATE 10/18

DWG. NO. 41

DOCUMENT NOT CONSIDERED FINAL UNLESS ALL SIGNATURES COMPLETED

| REVISIONS | | | | | | SHEET NO. |
|---|---|---|---|---|---|---|
| NO. | BY | DATE | NO. | BY | DATE | S03-41 |
| 1 | | | 3 | | | TOTAL SHEETS |
| 2 | | | 4 | | | 46 |

DocuSign Envelope ID: 5B67B2BB-4DD6-4E6E-81A0-C0FE3C5CF566

SLOPE PROTECTION SHALL CONSIST OF 4'' POURED-IN-PLACE CONCRETE PAVING AS SHOWN IN THE DETAILS ON THIS SHEET. CONCRETE SHALL BE CLASS ''B''. THE CONCRETE SURFACE SHALL BE FLOATED WITH A WOODEN FLOAT AND FINISHED. WELDED WIRE FABRIC REINFORCING SHALL BE 6 X 6 - W1.4 X W1.4, 60'' WIDE. SLOPE PROTECTION SHALL BE POURED IN 5' STRIPS AS SHOWN IN THE ''POURING DETAIL'' WITH 2'-0" LONG #4 BARS PLACED ALONG THE SLOPE BETWEEN STRIPS AT 1'-6" MAXIMUM SPACING. SLOPE PROTECTION MAY BE POURED IN ALTERNATE 4' AND 5' STRIPS AS SHOWN IN THE ''OPTIONAL POURING DETAIL'' WITH ADJACENT RUNS OF WELDED WIRE FABRIC LAPPING AT LEAST 6''. THE COST OF THE WELDED WIRE FABRIC AND #4 BARS, IF USED, SHALL BE INCLUDED IN THE CONTRACT UNIT PRICE BID PER SQUARE YARD FOR SLOPE PROTECTION.

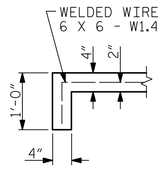


SECTION A-A

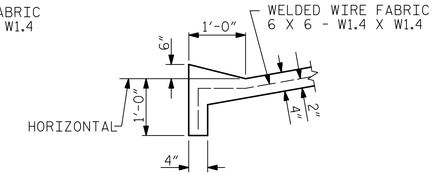


SECTION B-B

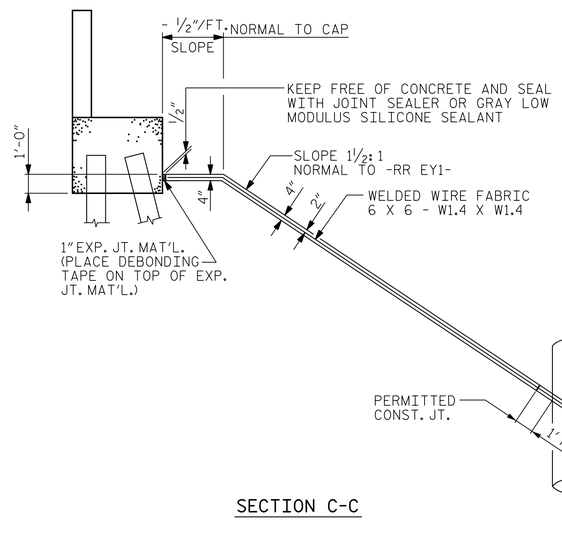


SECTION C-C

| LT BRIDGE @ POC STA 138+31.09 -L- | 4 INCH SLOPE PROTECTION | * WELDED WIRE FABRIC 60 INCHES WIDE |
|---|---|---|
| | SQUARE YARDS | APPROX. L.F. |
| END BENT 1 | 1616.3 | 2909 |
| END BENT 2 | 1196.1 | 2153 |

* QUANTITY SHOWN IS BASED ON 5' POURS.

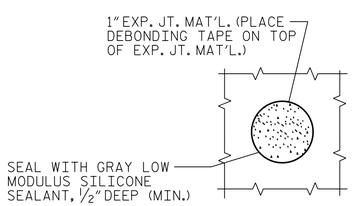


PLAN WHERE CONCRETE SLOPE PROTECTION MUST BE PLACED AROUND A BENT COLUMN

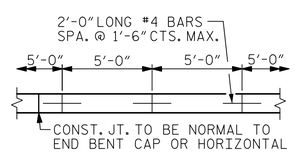


STRIP WIDTHS MAY VARY IN CURVED PORTION.

POURING DETAIL

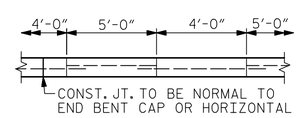


POUR A 4'-0'' STRIP FIRST. STRIP WIDTHS MAY VARY IN CURVED PORTION.

OPTIONAL POURING DETAIL

PROJECT NO. R-1015

CRAVEN COUNTY

STATION: POC STA. 138+31.09 -L-

SHEET 1 OF 2

STATE OF NORTH CAROLINA
DEPARTMENT OF TRANSPORTATION
RALEIGH

STANDARD

SLOPE PROTECTION DETAILS

LEFT LANE

DocuSigned by: James P. Gregg
A80FE024AB9C404...

NORTH CAROLINA PROFESSIONAL SEAL 046632 ENGINEER JAMES P. GREGG

11/20/2018

| ASSEMBLED BY : A. SMITH | DATE : 7/18 |
|---|---|
| CHECKED BY : B. NEUPANE | DATE : 10/18 |

| DRAWN BY : ELR 5/92 | REV. 12/21/11 | MAA/GM |
|---|---|---|
| CHECKED BY : GRP 6/92 | REV. 1/16 | MAA/TMG |
| | REV. 12/17 | MAA/THC |

DOCUMENT NOT CONSIDERED FINAL UNLESS ALL SIGNATURES COMPLETED

HNTB

HNTB NORTH CAROLINA, P.C.
NC License No. C-1554
343 E. Six Forks Rd., Suite 200, Raleigh, N.C. 27609

| DRAWN BY | A. SMITH | DATE | 7/18 |
|---|---|---|---|
| CHECKED BY | B. NEUPANE | DATE | 10/18 |
| DESIGN ENGINEER OF RECORD | J. GREGG | DATE | 10/18 |

DWG. NO. 42

REVISIONS

| NO. | BY | DATE | NO. | BY | DATE |
|---|---|---|---|---|---|
| 1 | | | 3 | | |
| 2 | | | 4 | | |

SHEET NO. S03-42

TOTAL SHEETS 46

STR. #3

STD. NO. SP1

DocuSign Envelope ID: 5B67B2BB-4DD6-4E6E-81A0-C0FE3C5CF566

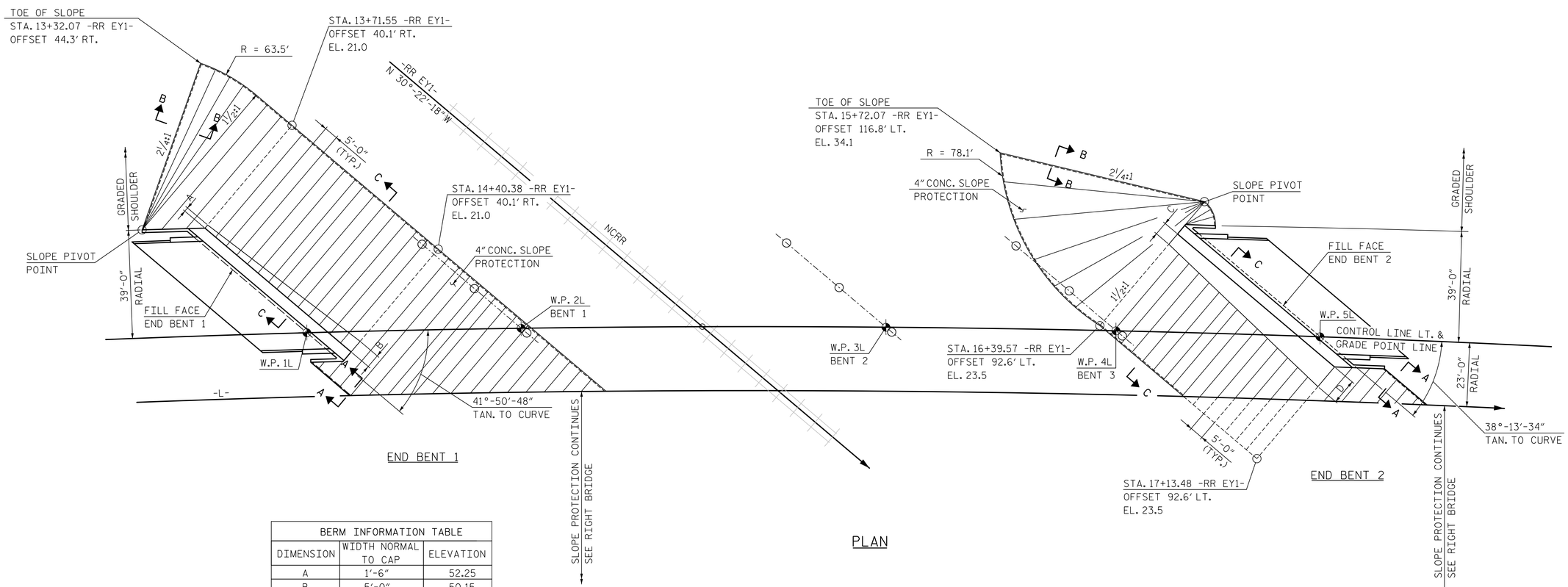


| BERM INFORMATION TABLE | | |
|---|---|---|
| DIMENSION | WIDTH NORMAL TO CAP | ELEVATION |
| A | 1′-6″ | 52.25 |
| B | 5′-0″ | 50.15 |
| C | 4′-10″ | 49.20 |
| D | 9′-3″ | 46.59 |

**PROJECT NO.** R-1015

CRAVEN **COUNTY**

**STATION:** POC STA. 138+31.09 -L-

SHEET 2 OF 2

STATE OF NORTH CAROLINA
DEPARTMENT OF TRANSPORTATION
RALEIGH

# SLOPE PROTECTION DETAILS

## LEFT LANE

DocuSigned by: James P. Gregg
E024AB9C404...

NORTH CAROLINA PROFESSIONAL SEAL 046632 ENGINEER JAMES P. GREGG

11/20/2018

**DOCUMENT NOT CONSIDERED FINAL UNLESS ALL SIGNATURES COMPLETED**

HNTB NORTH CAROLINA, P.C.
NC License No. C-1554
343 E. Six Forks Rd., Suite 200, Raleigh, N.C. 27609

DRAWN BY A. SMITH DATE 7/18
CHECKED BY B. NEUPANE DATE 10/18
DESIGN ENGINEER OF RECORD J. GREGG DATE 10/18

DWG. NO. 43

| REVISIONS | | | | | | SHEET NO. |
|---|---|---|---|---|---|---|
| NO. | BY | DATE | NO. | BY | DATE | S03-43 |
| 1 | | | 3 | | | TOTAL SHEETS |
| 2 | | | 4 | | | 46 |

DocuSign Envelope ID: 5B67B2BB-4DD6-4E6E-81A0-C0FE3C5CF566

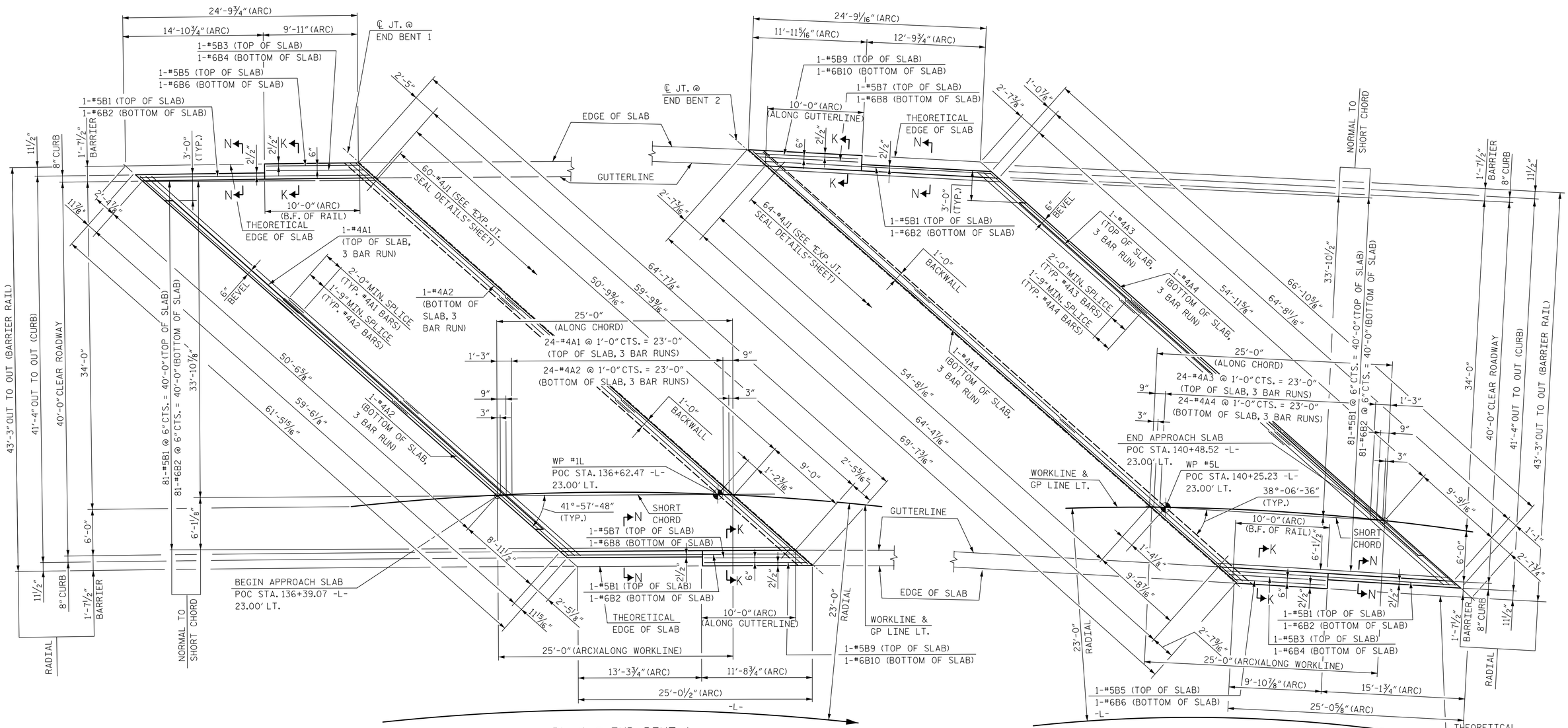


PLAN @ END BENT 1

-L- AND WORKLINE EXAGERATED

PLAN @ END BENT 2

-L- AND WORKLINE EXAGERATED

B.F. - DENOTES BACK FACE

**PROJECT NO.** R-1015

CRAVEN **COUNTY**

**STATION:** POC STA. 138+31.09 -L-

SHEET 1 OF 3

NOTES:

FOR SECTION N-N AND K-K, SEE "BRIDGE APPROACH SLAB FOR FLEXIBLE PAVEMENT" SHEET 2 OF 3.

FOR APPROACH SLAB BILL OF MATERIAL, SEE "BRIDGE APPROACH SLAB FOR FLEXIBLE PAVEMENT" SHEET 2 OF 3.

FOR BARRIER RAIL REINFORCING STEEL PLACEMENT AND BILL OF MATERIAL, SEE "BRIDGE APPROACH SLAB DETAILS" SHEET 3 OF 3.

FOR STANDARD EXPANSION JOINT SEAL DETAILS, SEE "EXPANSION JOINT SEAL DETAILS" SHEET.

DocuSigned by: James P. Gregg
DFE024AB9C404...

NORTH CAROLINA PROFESSIONAL SEAL 046632 ENGINEER JAMES P. GREGG

11/20/2018

**DOCUMENT NOT CONSIDERED FINAL UNLESS ALL SIGNATURES COMPLETED**

HNTB

HNTB NORTH CAROLINA, P.C.
NC License No. C-1554
343 E. Six Forks Rd., Suite 200, Raleigh, N.C. 27609

| | | | |
|---|---|---|---|
| DRAWN BY | A. SMITH | DATE | 7/18 |
| CHECKED BY | Z. GUO | DATE | 10/18 |
| DESIGN ENGINEER OF RECORD | J. GREGG | DATE | 10/18 |

DWG. NO. 44

STATE OF NORTH CAROLINA
**DEPARTMENT OF TRANSPORTATION**
RALEIGH

# BRIDGE APPROACH SLAB FOR FLEXIBLE PAVEMENT

## LEFT LANE

| REVISIONS | | | | | | SHEET NO. |
|---|---|---|---|---|---|---|
| NO. | BY | DATE | NO. | BY | DATE | S03-44 |
| 1 | | | 3 | | | TOTAL SHEETS |
| 2 | | | 4 | | | 46 |

DocuSign Envelope ID: 5B67B2BB-4DD6-4E6E-81A0-C0FE3C5CF566

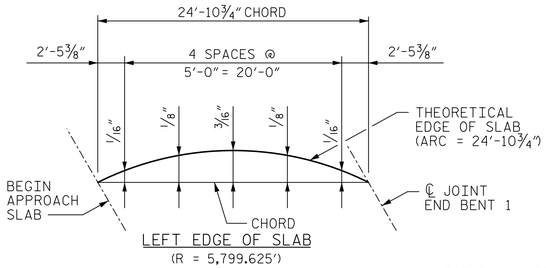


LEFT EDGE OF SLAB
(R = 5,799.625')

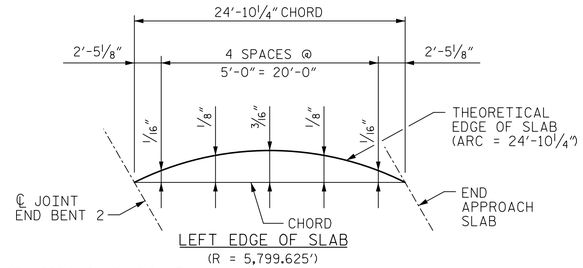


LEFT EDGE OF SLAB
(R = 5,799.625')

FOR PLAN VIEW OF APPROACH SLABS AT END BENT 1 AND END BENT 2, SEE SHEET 1 OF 3.

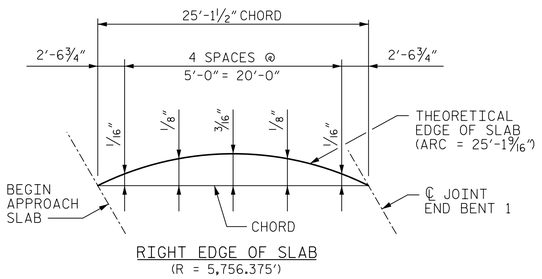


RIGHT EDGE OF SLAB
(R = 5,756.375')

CURVE OFFSETS - APPROACH SLAB AT END BENT 1

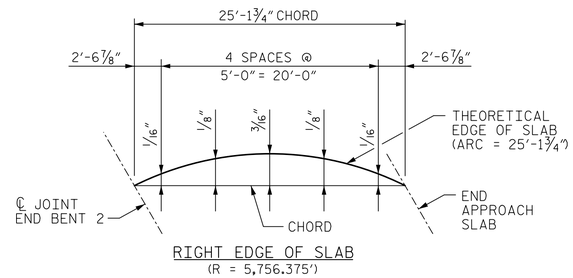


RIGHT EDGE OF SLAB
(R = 5,756.375')

CURVE OFFSETS - APPROACH SLAB AT END BENT 2

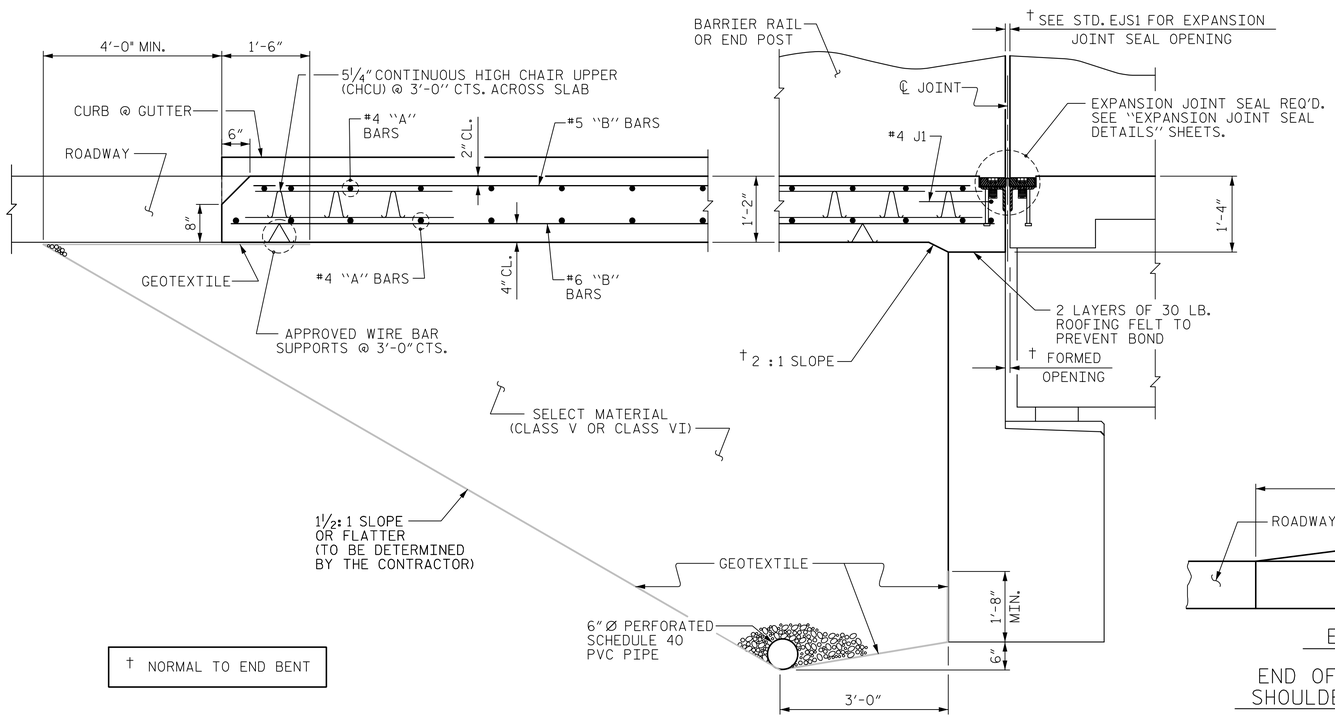


† NORMAL TO END BENT

SECTION THRU SLAB
(TYPE I - STANDARD APPROACH FILL)

## NOTES

FOR BRIDGE APPROACH FILL INCLUDING GEOTEXTILE, 6" Ø DRAINAGE PIPE, AND SELECT MATERIAL BACKFILL, SEE ROADWAY PLANS.

GEOTEXTILE SHALL BE TYPE 1 IN ACCORDANCE WITH THE STANDARD SPECIFICATIONS SECTION 1056.

SELECT MATERIAL BACKFILL (CLASS V OR CLASS VI) SHALL BE IN ACCORDANCE WITH STANDARD SPECIFICATIONS SECTION 1016.

SELECT MATERIAL BACKFILL IS TO BE CONTINUOUS ALONG FILL FACE OF BACKWALL FROM OUTSIDE EDGE TO OUTSIDE EDGE OF APPROACH SLAB.

APPROACH SLAB SHALL NOT BE CONSTRUCTED PRIOR TO COMPLETION OF THE BRIDGE DECK.

THE JOINT SHALL BE SAWED PRIOR TO THE CASTING OF THE BARRIER RAIL OR PARAPET AND END POST.

FOR THE 6" Ø DRAINAGE PIPE OUTLET(S), SEE ROADWAY STANDARD DRAWINGS.

AREA BETWEEN THE WINGWALL AND APPROACH SLAB SHALL BE GRADED TO DRAIN THE WATER AWAY FROM THE FILL FACE OF THE BRIDGE AND SHALL BE PAVED. SEE ROADWAY PLANS.

## BILL OF MATERIAL

### APPROACH SLAB AT EB #1

| BAR | NO. | SIZE | TYPE | LENGTH | WEIGHT |
|---|---|---|---|---|---|
| ✳ A1 | 75 | #4 | STR | 23'-4" | 1,169 |
| A2 | 78 | #4 | STR | 23'-1" | 1,203 |
| | | | | | |
| ✳ B1 | 83 | #5 | STR | 24'-0" | 2,078 |
| B2 | 83 | #6 | STR | 24'-6" | 3,054 |
| ✳ B3 | 1 | #5 | STR | 10'-1" | 11 |
| B4 | 1 | #6 | STR | 10'-1" | 15 |
| ✳ B5 | 1 | #5 | STR | 9'-6" | 10 |
| B6 | 1 | #6 | STR | 9'-6" | 14 |
| ✳ B7 | 1 | #5 | STR | 10'-5" | 11 |
| B8 | 1 | #6 | STR | 10'-5" | 16 |
| ✳ B9 | 1 | #5 | STR | 11'-0" | 11 |
| B10 | 1 | #6 | STR | 11'-0" | 17 |
| | | | | | |
| ✳ J1 | 60 | #4 | 1 | 1'-5" | 57 |
| | | | | | |
| REINFORCING STEEL | | | | ✳✳ LBS. | 4,319 |
| ✳ EPOXY COATED REINFORCING STEEL | | | | ✳✳ LBS. | 3,347 |
| | | | | | |
| CLASS AA CONCRETE | | | | C. Y. | 45.9 |

### APPROACH SLAB AT EB #2

| BAR | NO. | SIZE | TYPE | LENGTH | WEIGHT |
|---|---|---|---|---|---|
| ✳ A3 | 75 | #4 | STR | 25'-0" | 1,253 |
| A4 | 78 | #4 | STR | 24'-9" | 1,290 |
| | | | | | |
| ✳ B1 | 83 | #5 | STR | 24'-0" | 2,078 |
| B2 | 83 | #6 | STR | 24'-6" | 3,054 |
| ✳ B3 | 1 | #5 | STR | 10'-1" | 11 |
| B4 | 1 | #6 | STR | 10'-1" | 15 |
| ✳ B5 | 1 | #5 | STR | 9'-6" | 10 |
| B6 | 1 | #6 | STR | 9'-6" | 14 |
| ✳ B7 | 1 | #5 | STR | 10'-5" | 11 |
| B8 | 1 | #6 | STR | 10'-5" | 16 |
| ✳ B9 | 1 | #5 | STR | 11'-0" | 11 |
| B10 | 1 | #6 | STR | 11'-0" | 17 |
| | | | | | |
| ✳ J1 | 64 | #4 | 1 | 1'-5" | 61 |
| | | | | | |
| REINFORCING STEEL | | | | ✳✳ LBS. | 4,406 |
| ✳ EPOXY COATED REINFORCING STEEL | | | | ✳✳ LBS. | 3,435 |
| | | | | | |
| CLASS AA CONCRETE | | | | C. Y. | 45.9 |

THE QUANTITY OF #4 J1 BARS ON THE BILL OF MATERIAL IS BASED ON 1'-0" CENTERS. J1 BARS SHALL BE PLACED AT EACH VERTICAL STUD ANCHOR BOLT. IN THE EVENT THAT THE NUMBER OF VERTICAL STUD ANCHORS EXCEEDS THE NUMBER OF J1 BARS SPECIFIED, ADDITIONAL J1 BARS WILL NOT BE REQUIRED.

✳✳ QUANTITIES FOR BARRIER RAIL ARE NOT INCLUDED. SEE SHEET 3 OF 3.

## SPLICE LENGTHS

| BAR SIZE | EPOXY COATED | UNCOATED |
|---|---|---|
| #4 | 2'-0" | 1'-9" |
| #5 | 2'-6" | 2'-2" |
| #6 | 3'-10" | 2'-7" |

## BAR TYPE

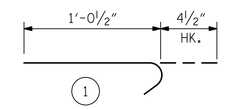


ALL BAR DIMENSIONS ARE OUT TO OUT

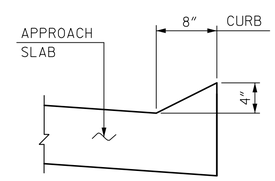


SECTION N-N

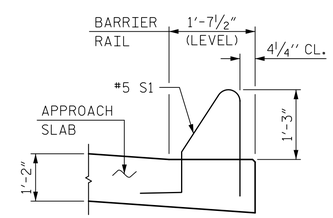


SECTION K-K

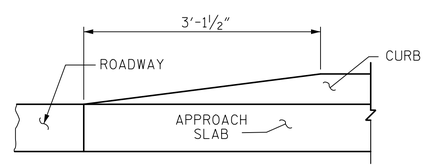


ELEVATION

END OF CURB WITHOUT SHOULDER BERM GUTTER

CURB DETAILS

PROJECT NO. R-1015

CRAVEN COUNTY

STATION: POC STA. 138+31.09 -L-

SHEET 2 OF 3

STATE OF NORTH CAROLINA
DEPARTMENT OF TRANSPORTATION
RALEIGH

STANDARD

BRIDGE APPROACH SLAB FOR FLEXIBLE PAVEMENT

LEFT LANE

DocuSigned by: James P. Gregg 5BDFE024AB9C404...

NORTH CAROLINA PROFESSIONAL SEAL 046632 ENGINEER JAMES P. GREGG

11/20/2018

| ASSEMBLED BY : A. SMITH | DATE : 7/18 |
|---|---|
| CHECKED BY : Z. GUO | DATE : 10/18 |

| | | | |
|---|---|---|---|
| DRAWN BY : EEM | 3/95 | REV. 12/21/11 | MAA/GM |
| CHECKED BY : VAP | 3/95 | REV. 6/13 | MAA/GM |
| | | REV. 12/17 | MAA/THC |

DOCUMENT NOT CONSIDERED FINAL UNLESS ALL SIGNATURES COMPLETED

HNTB NORTH CAROLINA, P.C.
NC License No. C-1554
343 E. Six Forks Rd., Suite 200, Raleigh, N.C. 27609

| | | | |
|---|---|---|---|
| DRAWN BY | A. SMITH | DATE | 7/18 |
| CHECKED BY | Z. GUO | DATE | 10/18 |
| DESIGN ENGINEER OF RECORD | J. GREGG | DATE | 10/18 |

DWG. NO. 45

| REVISIONS | | | | | | SHEET NO. |
|---|---|---|---|---|---|---|
| NO. | BY | DATE | NO. | BY | DATE | S03-45 |
| 1 | | | 3 | | | TOTAL SHEETS |
| 2 | | | 4 | | | 46 |

STD. NO. BAS2

DocuSign Envelope ID: 5B67B2BB-4DD6-4E6E-81A0-C0FE3C5CF566

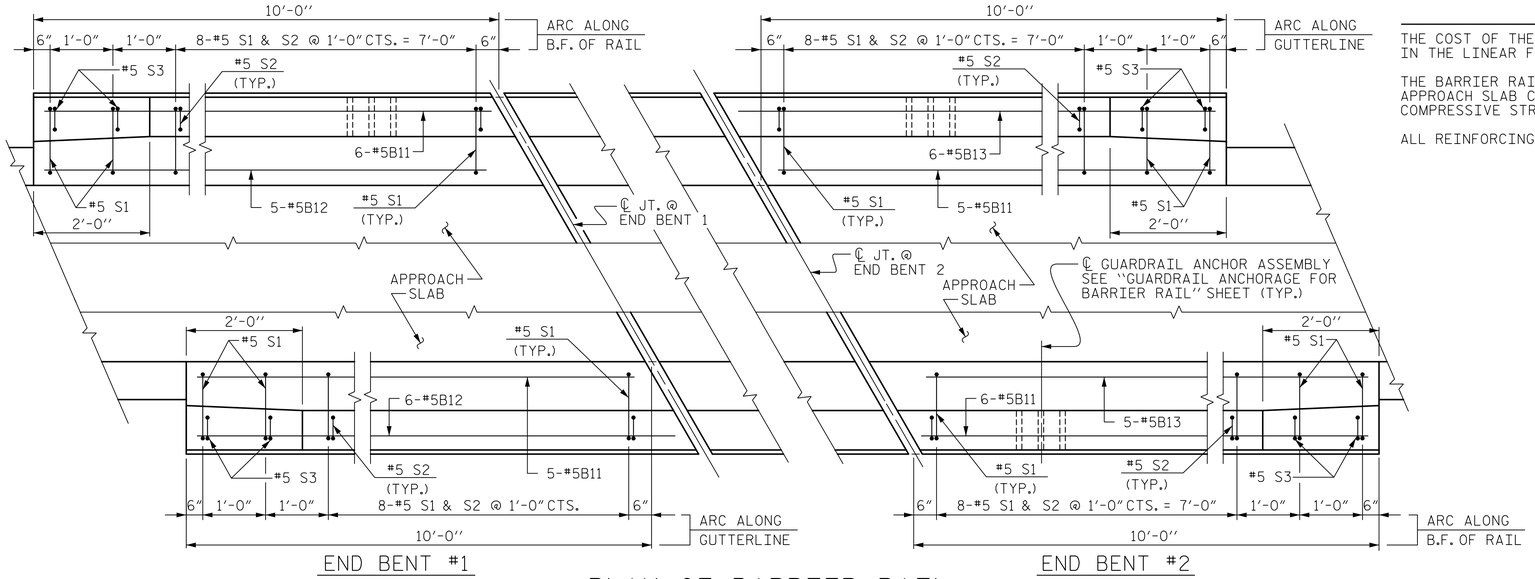


## PLAN OF BARRIER RAIL

B.F. - DENOTES BACK FACE

## NOTES

THE COST OF THE BARRIER RAIL ON THE APPROACH SLAB SHALL BE INCLUDED IN THE LINEAR FOOT CONTRACT PRICE BID FOR "CONCRETE BARRIER RAIL".

THE BARRIER RAIL ON EACH APPROACH SLAB SHALL NOT BE CAST UNTIL ALL APPROACH SLAB CONCRETE HAS BEEN CAST AND HAS REACHED A MINIMUM COMPRESSIVE STRENGTH OF 3,000 PSI.

ALL REINFORCING STEEL IN BARRIER RAILS SHALL BE EPOXY COATED.

## BAR TYPES

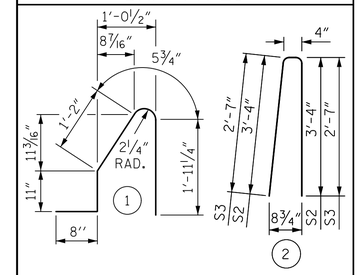


ALL BAR DIMENSIONS ARE OUT TO OUT

## BILL OF MATERIAL

BARRIER RAIL ONLY

| BAR | NO. | SIZE | TYPE | LENGTH | WEIGHT |
|---|---|---|---|---|---|
| ✳ B11 | 22 | #5 | STR | 9'-8" | 222 |
| ✳ B12 | 11 | #5 | STR | 11'-1" | 127 |
| ✳ B13 | 11 | #5 | STR | 11'-3" | 129 |
| | | | | | |
| ✳ S1 | 40 | #5 | 1 | 5'-2" | 216 |
| ✳ S2 | 32 | #5 | 2 | 7'-0" | 234 |
| ✳ S3 | 8 | #5 | 2 | 5'-6" | 46 |
| | | | | | |

| | | |
|---|---|---|
| ✳ EPOXY COATED REINFORCING STEEL | LBS. | 974 |
| CLASS AA CONCRETE | C. Y. | 5.7 |
| CONCRETE BARRIER RAIL | | 43.9 LIN. FT. |

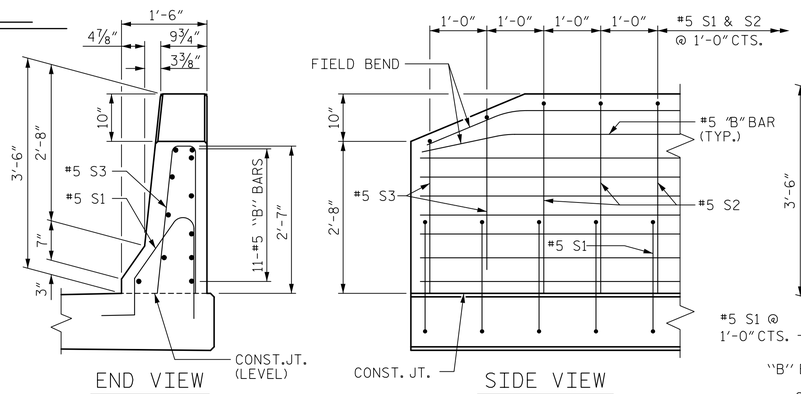


## END OF RAIL DETAILS

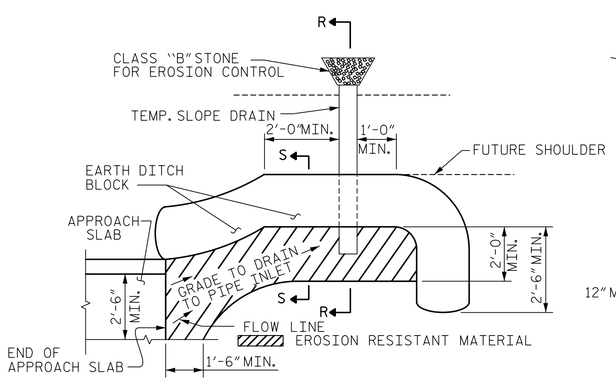


NOTE: IMMEDIATELY AFTER THE CONSTRUCTION OF THE APPROACH SLAB, THE CONTRACTOR SHALL PROVIDE TEMPORARY BERM AND SLOPE DRAIN. CONTRACTOR SHALL GRADE TO PIPE INLET AND PROVIDE EROSION RESISTANT MATERIAL AS SHOWN. THE EROSION RESISTANT MATERIAL SHALL BE EITHER 1) ASPHALT PLANT MIX, TYPE 1 OR TYPE 2, MIN. 2" DEPTH, 2) EROSION CONTROL MAT, OR 3) CONCRETE, AS DIRECTED BY THE ENGINEER. THE SLOPE DRAIN SHALL CONSIST OF A NON-PERFORATED TEMPORARY DRAINAGE PIPE, 12 INCHES IN DIAMETER.

PLAN VIEW

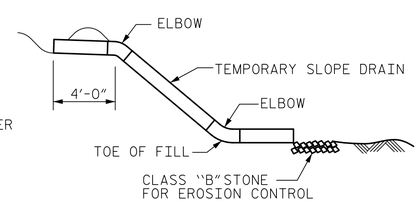


SECTION R-R

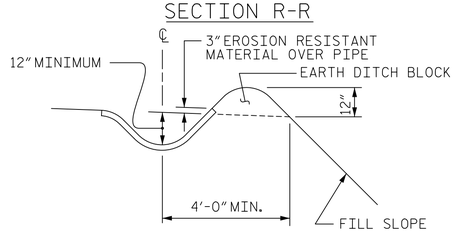


SECTION S-S

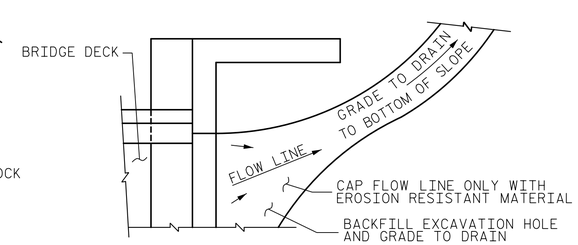


NOTE: IF THE APPROACH SLAB IS NOT CONSTRUCTED IMMEDIATELY AFTER THE BACKFILLING OF THE END BENT EXCAVATION, GRADE TO DRAIN TO THE BOTTOM OF THE SLOPE AND PROVIDE EROSION RESISTANT MATERIAL, SUCH AS FIBERGLASS ROVING OR AS DIRECTED BY THE ENGINEER TO PREVENT SOIL EROSION AND TO PROTECT THE AREA ADJACENT TO THE STRUCTURE. THE CONTRACTOR WILL BE REQUIRED TO REMOVE THESE MATERIALS PRIOR TO CONSTRUCTION OF THE APPROACH SLAB.

TEMPORARY DRAINAGE DETAIL

PROJECT NO. R-1015

CRAVEN COUNTY

STATION: POC STA. 138+31.09 -L-

SHEET 3 OF 3

STATE OF NORTH CAROLINA
DEPARTMENT OF TRANSPORTATION
RALEIGH

STANDARD

BRIDGE APPROACH SLAB DETAILS

LEFT LANE

NORTH CAROLINA PROFESSIONAL SEAL 046632 ENGINEER JAMES P. GREGG

DocuSigned by: James P. Gregg

11/20/2018

## TEMPORARY BERM AND SLOPE DRAIN DETAILS

(TO BE USED WHEN SHOULDER BERM GUTTER IS REQUIRED)

| | | | |
|---|---|---|---|
| ASSEMBLED BY : A. SMITH | | DATE : 7/18 | |
| CHECKED BY : Z. GUO | | DATE : 10/18 | |
| DRAWN BY : FCJ | 11/88 | REV. 10/1/11 | MAA/GM |
| CHECKED BY : ARB | 11/88 | REV. 7/12 | MAA/GM |
| | | REV. 6/13 | MAA/GM |

DOCUMENT NOT CONSIDERED FINAL UNLESS ALL SIGNATURES COMPLETED

HNTB NORTH CAROLINA, P.C.
NC License No. C-1554
343 E. Six Forks Rd., Suite 200, Raleigh, N.C. 27609

| | | | |
|---|---|---|---|
| DRAWN BY | A. SMITH | DATE | 7/18 |
| CHECKED BY | Z. GUO | DATE | 10/18 |
| DESIGN ENGINEER OF RECORD | J. GREGG | DATE | 10/18 |

DWG. NO. 46

| REVISIONS | | | | | | SHEET NO. |
|---|---|---|---|---|---|---|
| NO. | BY | DATE | NO. | BY | DATE | S03-46 |
| 1 | | | 3 | | | TOTAL SHEETS |
| 2 | | | 4 | | | 46 |

STD. NO. BAS4

DocuSign Envelope ID: 11A1261F-14B1-49AE-A388-908A64E11071

F.A. PROJECT NO. NHF-70(49)

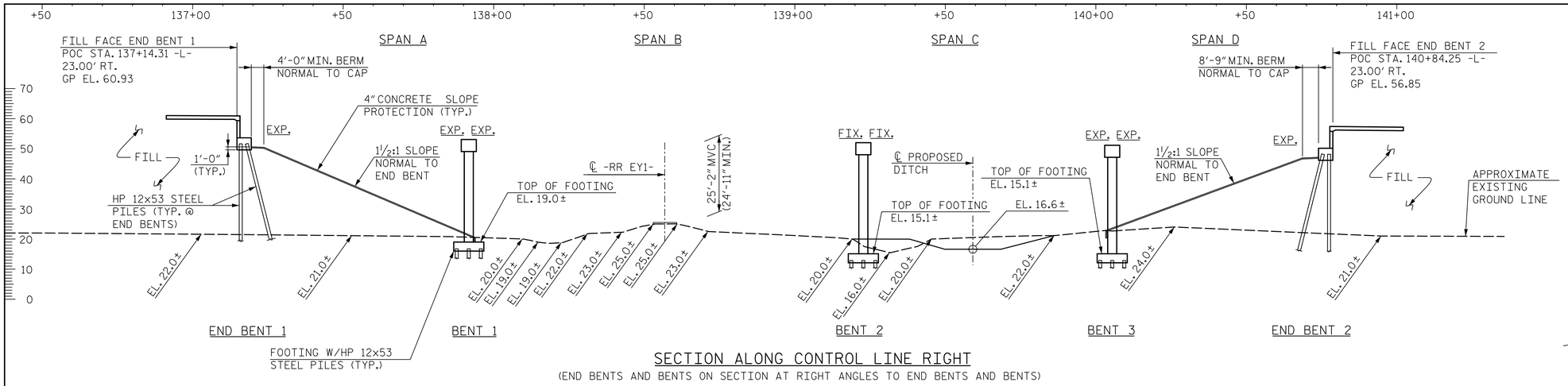


## SECTION ALONG CONTROL LINE RIGHT

(END BENTS AND BENTS ON SECTION AT RIGHT ANGLES TO END BENTS AND BENTS)

NOTES:

FOR GENERAL NOTES, SEE SHEET 4 OF 4.

MVC = MIN. VERTICAL CLEARANCE

MHC = MIN. HORIZONTAL CLEARANCE

## GRADE DATA -L-

### CURVE DATA -L-

PI STA. = 137+14.92
△ = 13°30'48" (RT)
D = 0°59'53"
L = 1,354.03'
T = 680.17'
R = 5,741.00'
SE = 0.04

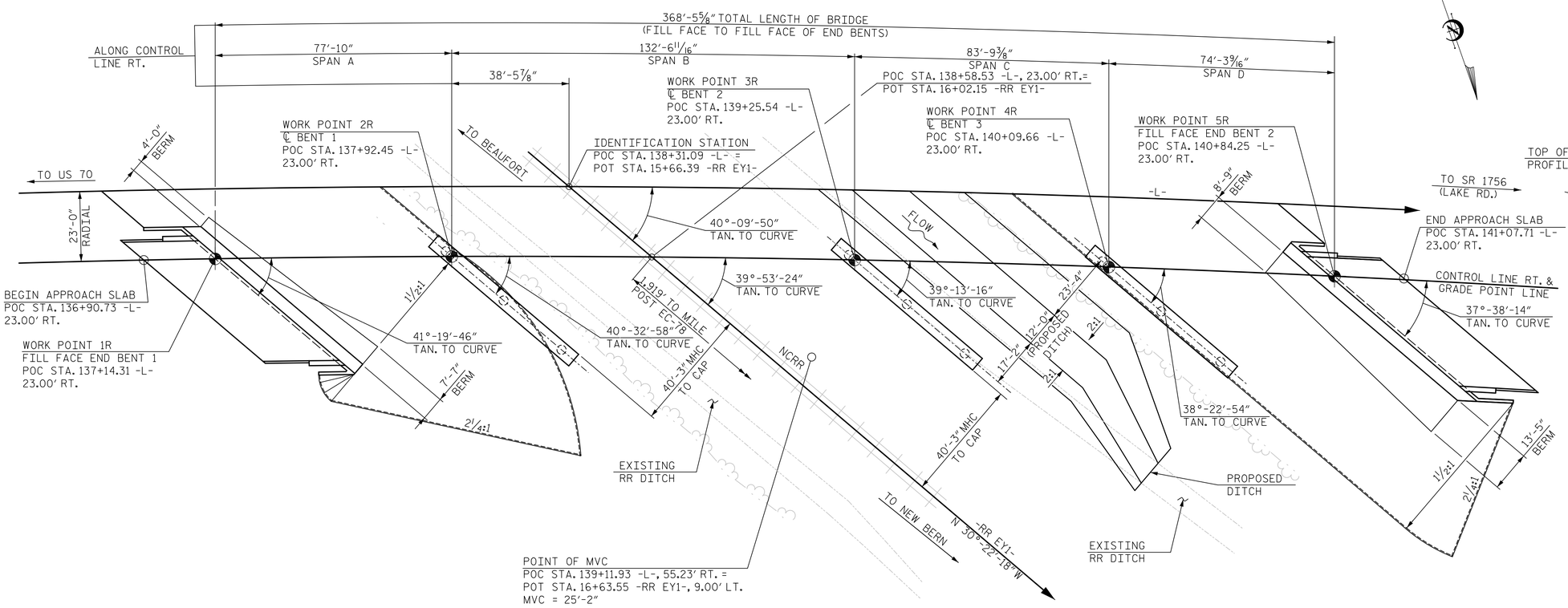


## PLAN

NOTES: PILES NOT SHOWN FOR CLARITY.
ALL END BENTS AND BENTS ARE PARALLEL.

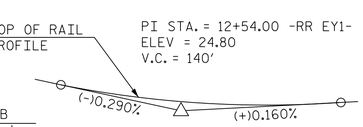


## GRADE DATA -RR EY1-

NOTE: TOP OF RAIL PROFILE WAS APPROXIMATED FROM AVAILABLE SURVEY INFORMATION

PROJECT NO. R-1015

CRAVEN COUNTY

STATION: POC STA. 138+31.09 -L-
= POT STA 15+66.39 -RR EY1-

BRIDGE NO. 275

SHEET 1 OF 4 NCRR MILE POST EC-78.36

DocuSigned by: James P. Gregg
8B0FE02A4B9C404...

NORTH CAROLINA PROFESSIONAL SEAL 046632 ENGINEER JAMES P. GREGG

11/20/2018

STATE OF NORTH CAROLINA
DEPARTMENT OF TRANSPORTATION
RALEIGH

GENERAL DRAWING
BRIDGE OVER NCRR
ON US 70 (HAVELOCK BYPASS)
BETWEEN US 70 AND SR 1756
RIGHT LANE

HNTB NORTH CAROLINA, P.C.
NC License No. C-1554
343 E. Six Forks Rd., Suite 200, Raleigh, N.C. 27609

DRAWN BY M. WRIGHT DATE 3/18
CHECKED BY B. NEUPANE DATE 9/18
DESIGN ENGINEER OF RECORD J. GREGG DATE 10/18

DWG. NO. 1

| REVISIONS | | | | | | SHEET NO. |
|---|---|---|---|---|---|---|
| NO. | BY | DATE | NO. | BY | DATE | S04-1 |
| 1 | | | 3 | | | TOTAL SHEETS |
| 2 | | | 4 | | | 46 |

DOCUMENT NOT CONSIDERED FINAL
UNLESS ALL SIGNATURES COMPLETED

DocuSign Envelope ID: 11A1261F-14B1-49AE-A388-908A64E11071

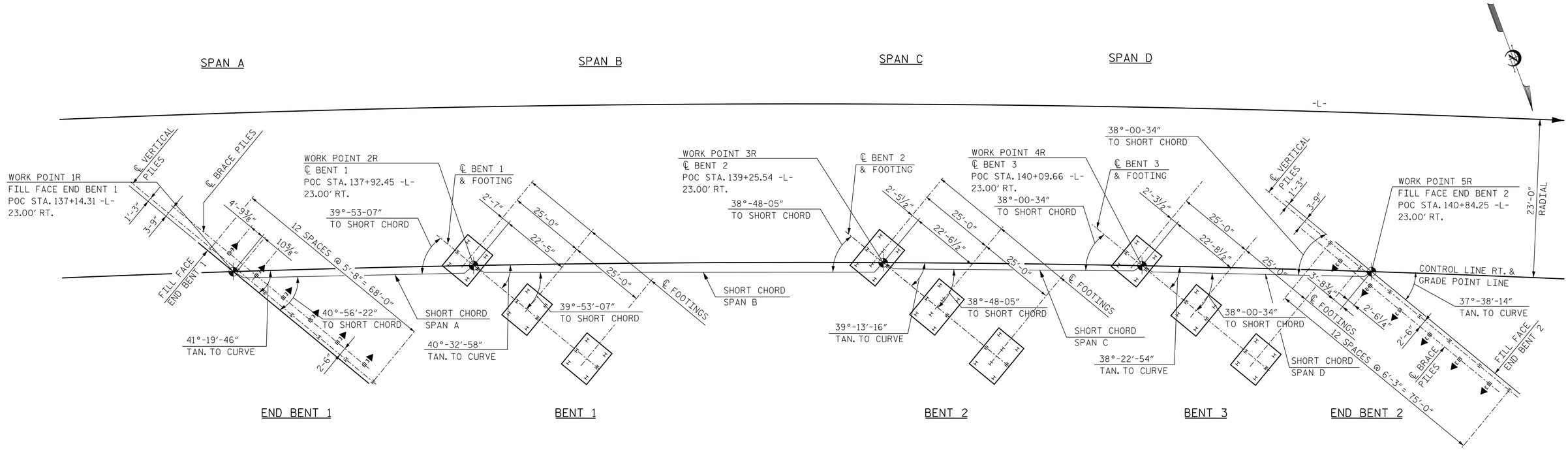


## FOUNDATION NOTES

FOR PILES, SEE SECTION 450 OF THE STANDARD SPECIFICATIONS.

PILES AT END BENT NO.1 ARE DESIGNED FOR A FACTORED RESISTANCE OF 110 TONS PER PILE. DRIVE PILES AT END BENT NO. 1 TO A REQUIRED DRIVING RESISTANCE OF 150 TONS PER PILE.

PILES AT END BENT NO.2 ARE DESIGNED FOR A FACTORED RESISTANCE OF 105 TONS PER PILE. DRIVE PILES AT END BENT NO. 2 TO A REQUIRED DRIVING RESISTANCE OF 140 TONS PER PILE.

PILES AT BENT NO. 1 ARE DESIGNED FOR A FACTORED RESISTANCE OF 125 TONS PER PILE. DRIVE PILES AT BENT NO. 1 TO A REQUIRED DRIVING RESISTANCE OF 170 TONS PER PILE.

PILES AT BENT NO. 2 ARE DESIGNED FOR A FACTORED RESISTANCE OF 115 TONS PER PILE. DRIVE PILES AT BENT NO. 2 TO A REQUIRED DRIVING RESISTANCE OF 155 TONS PER PILE.

PILES AT BENT NO. 3 ARE DESIGNED FOR A FACTORED RESISTANCE OF 105 TONS PER PILE. DRIVE PILES AT BENT NO. 3 TO A REQUIRED DRIVING RESISTANCE OF 140 TONS PER PILE.

TESTING THE FIRST PRODUCTION PILE PER STRUCTURE WITH THE PDA DURING DRIVING, RESTRIKING, OR REDRIVING IS REQUIRED AT THE FIRST END BENT AND THE FIRST INTERIOR BENT LOCATIONS. FOR PDA TESTING, SEE SECTION 450 OF THE STANDARD SPECIFICATIONS.

NOTE THAT AT BENTS 1 - 3 THE BOTTOM OF FOOTINGS ARE BELOW THE GROUNDWATER TABLE AND DEWATERING IS ANTICIPATED.

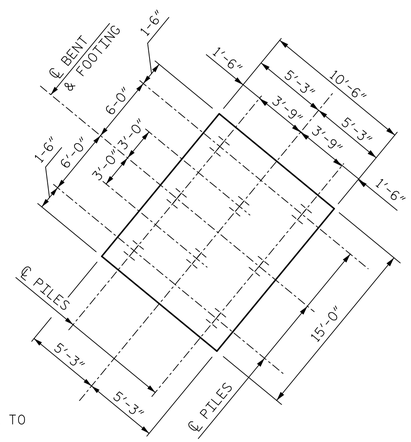


TYPICAL FOOTING LAYOUT
BENT 2

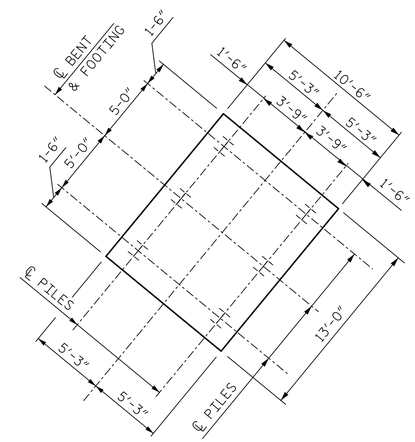


TYPICAL FOOTING LAYOUT
BENT 1 AND 3

## NOTES:

ALL DIMENSIONS ARE PARALLEL OR NORMAL TO BENT CONTROL LINES AND FILL FACES.

◄⊏ INDICATES PILE BATTER IN DIRECTION SHOWN.

BRACE PILES AT END BENTS ARE TO BE BATTERED AT 3:12.

ALL PILES AT END BENT 1 AND END BENT 2 ARE HP 12x53 STEEL PILES.

ALL PILES AT BENT 1, 2, AND 3 ARE HP 12x53 STEEL PILES.

FOR FOUNDATION ELEVATIONS AND DETAILS, SEE BENT AND END BENT SHEETS.

ALL PILE DIMENSIONS ARE TO CENTERS OF PILES AT BOTTOM OF END BENTS.

**DOCUMENT NOT CONSIDERED FINAL UNLESS ALL SIGNATURES COMPLETED**

DocuSigned by: James P. Gregg
680FE024AB9C404...

NORTH CAROLINA PROFESSIONAL SEAL 046632 ENGINEER JAMES P. GREGG
11/20/2018

HNTB
HNTB NORTH CAROLINA, P.C.
NC License No. C-1554
343 E. Six Forks Rd., Suite 200, Raleigh, N.C. 27609

| | | | |
|---|---|---|---|
| DRAWN BY | A. SMITH | DATE | 7/18 |
| CHECKED BY | B. NEUPANE | DATE | 9/18 |
| DESIGN ENGINEER OF RECORD | J. GREGG | DATE | 10/18 |

DWG. NO. 2

PROJECT NO. R-1015
CRAVEN COUNTY
STATION: POC STA. 138+31.09 -L-

SHEET 2 OF 4

STATE OF NORTH CAROLINA
DEPARTMENT OF TRANSPORTATION
RALEIGH

GENERAL DRAWINGS

FOUNDATION LAYOUT

RIGHT LANE

REVISIONS

| NO. | BY | DATE | NO. | BY | DATE |
|---|---|---|---|---|---|
| 1 | | | 3 | | |
| 2 | | | 4 | | |

SHEET NO. S04-2
TOTAL SHEETS 46

DocuSign Envelope ID: 11A1261F-14B1-49AE-A388-908A64E11071

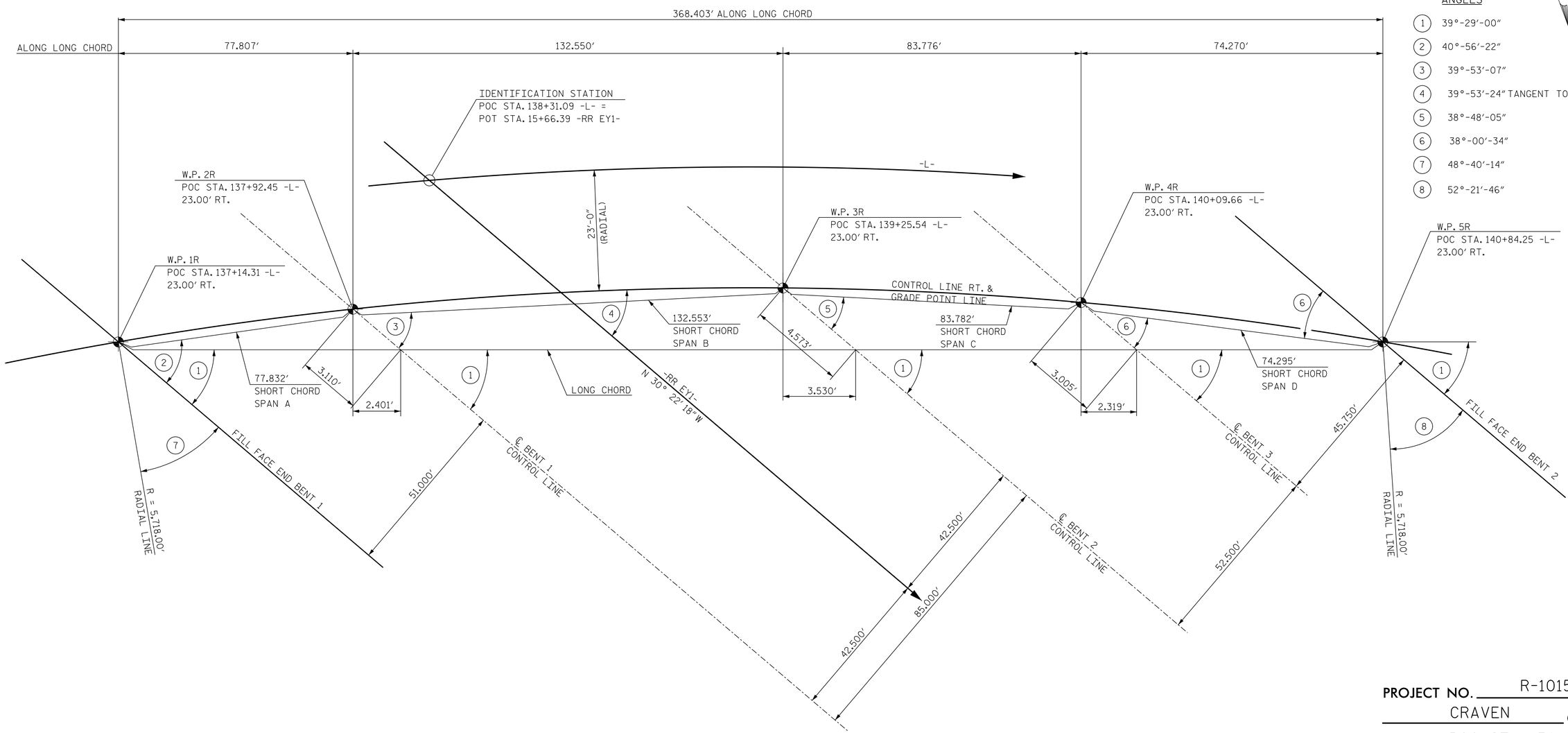


## ANGLES

| | |
|---|---|
| 1 | 39°-29'-00" |
| 2 | 40°-56'-22" |
| 3 | 39°-53'-07" |
| 4 | 39°-53'-24" TANGENT TO CURVE |
| 5 | 38°-48'-05" |
| 6 | 38°-00'-34" |
| 7 | 48°-40'-14" |
| 8 | 52°-21'-46" |

## LONG CHORD LAYOUT

NOTE: ALL BENTS ARE PARALLEL

**PROJECT NO.** R-1015

CRAVEN **COUNTY**

**STATION:** POC STA. 138+31.09 -L-

SHEET 3 OF 4

DocuSigned by: James P. Gregg
8BDFE024AB9C404...

NORTH CAROLINA PROFESSIONAL SEAL 046632 ENGINEER JAMES P. GREGG

11/20/2018

STATE OF NORTH CAROLINA
DEPARTMENT OF TRANSPORTATION
RALEIGH

GENERAL DRAWING

LONG CHORD LAYOUT

RIGHT LANE

HNTB

HNTB NORTH CAROLINA, P.C.
NC License No. C-1554
343 E. Six Forks Rd., Suite 200, Raleigh, N.C. 27609

| | | | |
|---|---|---|---|
| DRAWN BY | A. SMITH | DATE | 7/18 |
| CHECKED BY | B. NEUPANE | DATE | 9/18 |
| DESIGN ENGINEER OF RECORD | J. GREGG | DATE | 10/18 |

DWG. NO. 3

| REVISIONS | | | | | | SHEET NO. |
|---|---|---|---|---|---|---|
| NO. | BY | DATE | NO. | BY | DATE | S04-3 |
| 1 | | | 3 | | | TOTAL SHEETS |
| 2 | | | 4 | | | 46 |

**DOCUMENT NOT CONSIDERED FINAL UNLESS ALL SIGNATURES COMPLETED**

DocuSign Envelope ID: 88A0B777-7A2E-445F-ADAD-2E515F175E6D

BM - "BM7"-L- STA 140+63.43, 191.75' LT., RR SPIKE IN TREE. EL 22.75

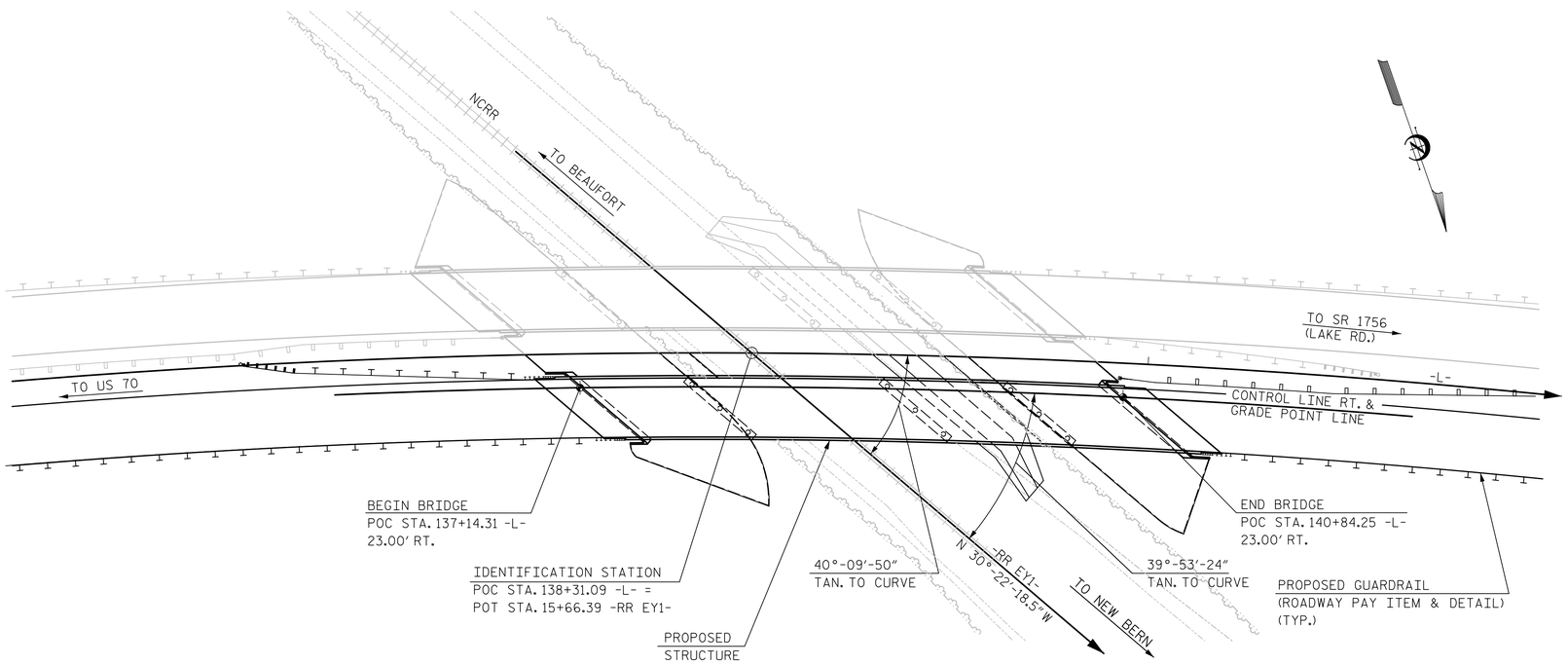


LOCATION SKETCH

NOTE: FOR UTILITY INFORMATION, SEE UTILITY PLAN AND SPECIAL PROVISIONS.

## GENERAL NOTES

ASSUMED LIVE LOAD = HL-93 OR ALTERNATE LOADING.

THIS BRIDGE HAS BEEN DESIGNED IN ACCORDANCE WITH THE AASHTO LRFD BRIDGE DESIGN SPECIFICATIONS.

REMOVABLE FORMS MAY BE USED IN LIEU OF METAL STAY-IN-PLACE FORMS IN ACCORDANCE WITH ARTICLE 420-3 OF THE STANDARD SPECIFICATIONS.

THIS BRIDGE IS LOCATED IN SEISMIC ZONE 1.

FOR OTHER DESIGN DATA AND GENERAL NOTES, SEE SHEET SN.

FOR SUBMITTAL OF WORKING DRAWINGS, SEE SPECIAL PROVISIONS.

FOR FALSEWORK AND FORMWORK, SEE SPECIAL PROVISIONS.

FOR CRANE SAFETY, SEE SPECIAL PROVISIONS.

FOR GROUT FOR STRUCTURES, SEE SPECIAL PROVISIONS.

FOR MODIFIED 74" PRESTRESSED CONCRETE GIRDERS, SEE SPECIAL PROVISIONS.

NEEDLE BEAMS WILL NOT BE ALLOWED UNLESS OTHERWISE CALLED FOR ON THE PLANS OR APPROVED BY THE ENGINEER.

THE CONTRACTOR SHALL PROVIDE INDEPENDENT ASSURANCE SAMPLES OF REINFORCING STEEL AS FOLLOWS: FOR PROJECTS REQUIRING UP TO 400 TONS OF REINFORCING STEEL, ONE 30 INCH SAMPLE OF EACH SIZE BAR USED, AND FOR PROJECTS REQUIRING OVER 400 TONS OF REINFORCING STEEL, TWO 30 INCH SAMPLES OF EACH SIZE BAR USED. THE SAMPLE BARS SHOULD COME FROM STEEL ACTUALLY USED IN THE PROJECT AND THE SAMPLE BARS SHOULD BE REPLACED BY SPLICED BARS AS SPECIFIED IN THE SAMPLE BAR REPLACEMENT CHART. PAYMENT FOR THE SAMPLE BARS AND REPLACEMENT REINFORCING STEEL SHALL BE CONSIDERED INCIDENTAL TO VARIOUS PAY ITEMS.

FOR EROSION CONTROL MEASURES, SEE EROSION CONTROL PLANS.

THE RAILROAD TRACK TOP OF RAIL ELEVATIONS SHOWN ON THE PLANS ARE FROM THE BEST INFORMATION AVAILABLE. PRIOR TO BEGINNING BRIDGE CONSTRUCTION, VERIFY THE TOP OF RAIL ELEVATIONS AND REPORT ANY VARIATIONS OT THE ENGINEER. ANY PLAN REVISIONS NECESSARY TO ACHIEVE THE REQUIRED MINIMUM VERTICAL CLEARANCE WILL BE PROVIDED BY THE DEPARTMENT.

SAMPLE BAR REPLACEMENT

| SIZE | LENGTH |
|---|---|
| #3 | 6'-2" |
| #4 | 7'-4" |
| #5 | 8'-6" |
| #6 | 9'-8" |
| #7 | 10'-10" |
| #8 | 12'-0" |
| #9 | 13'-2" |
| #10 | 14'-6" |
| #11 | 15'-10" |

NOTE:
SAMPLE BAR REPLACEMENT LENGTHS BASED ON 30" (SAMPLE LENGTH) PLUS TWO SPLICE LENGTHS AND FY = 60KSI.

TOTAL BILL OF MATERIAL

| | FOUNDATION EXCAVATION FOR BENT AT STATION 138+31.09 -L- (RIGHT LANE) | PDA TESTING | REINFORCED CONCRETE DECK SLAB | GROOVING BRIDGE FLOORS | CLASS A CONCRETE | BRIDGE APPROACH SLAB AT STATION 138+31.09 -L- (RIGHT LANE) | REINFORCING STEEL | SPIRAL COLUMN REINFORCING STEEL |
|---|---|---|---|---|---|---|---|---|
| | LUMP SUM | EA. | SQ. FT. | SQ. FT. | CU. YDS. | LUMP SUM | LBS. | LBS. |
| SUPERSTRUCTURE | —— | —— | 15,842 | 15,292 | —— | LUMP SUM | —— | —— |
| END BENT 1 | —— | —— | —— | —— | 84.7 | —— | 11,596 | —— |
| BENT 1 | LUMP SUM | —— | —— | —— | 148.2 | —— | 29,463 | 2,736 |
| BENT 2 | LUMP SUM | —— | —— | —— | 162.0 | —— | 29,723 | 2,962 |
| BENT 3 | LUMP SUM | —— | —— | —— | 150.9 | —— | 28,994 | 2,860 |
| END BENT 2 | —— | —— | —— | —— | 90.7 | —— | 12,131 | —— |
| TOTAL | LUMP SUM | 2 | 15,842 | 15,292 | 636.5 | LUMP SUM | 111,907 | 8,558 |

TOTAL BILL OF MATERIAL

| | MODIFIED 74" PRESTRESSED CONCRETE GIRDERS | | PILE DRIVING EQUIPMENT SETUP FOR HP 12X53 STEEL PILES | HP 12X53 STEEL PILES | | PILE REDRIVES | CONCRETE BARRIER RAIL | 4" SLOPE PROTECTION | ELASTOMERIC BEARINGS | EXPANSION JOINT SEALS |
|---|---|---|---|---|---|---|---|---|---|---|
| | NO. | L.F. | EA. | NO. | L.F. | EA. | L.F. | SQ. YD. | LUMP SUM | LUMP SUM |
| SUPERSTRUCTURE | 16 | 1429.79 | —— | — | —— | —— | 777.0 | —— | LUMP SUM | LUMP SUM |
| END BENT 1 | — | —— | 13 | 13 | 1,365 | 6 | —— | 1,342.4 | —— | —— |
| BENT 1 | — | —— | 18 | 18 | 1,350 | 9 | —— | —— | —— | —— |
| BENT 2 | — | —— | 24 | 24 | 1,680 | 12 | —— | —— | —— | —— |
| BENT 3 | — | —— | 18 | 18 | 1,170 | 9 | —— | —— | —— | —— |
| END BENT 2 | — | —— | 13 | 13 | 1,300 | 6 | —— | 1,402.5 | —— | —— |
| TOTAL | 16 | 1429.79 | 86 | 86 | 6,865 | 42 | 777.0 | 2,744.9 | LUMP SUM | LUMP SUM |

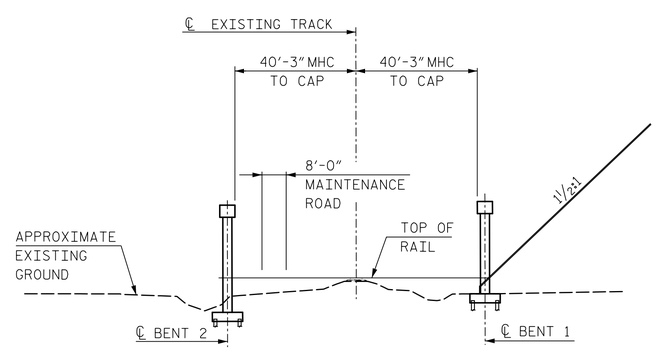


SECTION THRU RAILROAD

(LOOKING IN DIRECTION OF INCREASING STATIONS ON RAILROAD)
(SPAN LENGTHS BASED ON THIS SECTION)

MHC = MINIMUM HORIZONTAL CLEARANCE

PROJECT NO. R-1015
CRAVEN COUNTY
STATION: POC STA. 138+31.09 -L-

SHEET 4 OF 4

STATE OF NORTH CAROLINA
DEPARTMENT OF TRANSPORTATION
RALEIGH

GENERAL DRAWING
LOCATION SKETCH, GENERAL NOTES, AND TOTAL BILL OF MATERIALS
RIGHT LANE

DocuSigned by: James P. Gregg
NORTH CAROLINA PROFESSIONAL SEAL 046632 ENGINEER JAMES P. GREGG
12/6/2018

HNTB NORTH CAROLINA, P.C.
NC License No. C-1554
343 E. Six Forks Rd., Suite 200, Raleigh, N.C. 27609

DRAWN BY A. SMITH DATE 7/18
CHECKED BY B. NEUPANE DATE 9/18
DESIGN ENGINEER OF RECORD J. GREGG DATE 10/18

DWG. NO. 4

DOCUMENT NOT CONSIDERED FINAL UNLESS ALL SIGNATURES COMPLETED

| REVISIONS | | | | | | SHEET NO. |
|---|---|---|---|---|---|---|
| NO. | BY | DATE | NO. | BY | DATE | S04-4 |
| 1 | | | 3 | | | TOTAL SHEETS |
| 2 | | | 4 | | | 46 |

DocuSign Envelope ID: 11A1261F-14B1-49AE-A388-908A64E11071

# LOAD AND RESISTANCE FACTOR RATING (LRFR) SUMMARY FOR PRESTRESSED CONCRETE GIRDERS

| LEVEL | | VEHICLE | WEIGHT (W) (TONS) | ⟨#⟩ CONTROLLING LOAD RATING | MINIMUM RATING FACTORS (RF) | TONS = W × RF | STRENGTH I LIMIT STATE | | | | | | | | | | | SERVICE III LIMIT STATE | | | | | | COMMENT NUMBER |
|---|---|---|---|---|---|---|---|---|---|---|---|---|---|---|---|---|---|---|---|---|---|---|---|---|
| | | | | | | | LIVE-LOAD FACTORS ($\gamma_{LL}$) | MOMENT | | | | | SHEAR | | | | | LIVE-LOAD FACTORS ($\gamma_{LL}$) | MOMENT | | | | | |
| | | | | | | | | DISTRIBUTION FACTORS (DF) | RATING FACTOR | SPAN | GIRDER LOCATION | DISTANCE FROM LEFT END OF SPAN (ft) | DISTRIBUTION FACTORS (DF) | RATING FACTOR | SPAN | GIRDER LOCATION | DISTANCE FROM LEFT END OF SPAN (ft) | | DISTRIBUTION FACTORS (DF) | RATING FACTOR | SPAN | GIRDER LOCATION | DISTANCE FROM LEFT END OF SPAN (ft) | |
| DESIGN LOAD RATING | | HL-93 (INVENTORY) | N/A | ⟨1⟩ | 1.11 | -- | 1.75 | 0.84 | 1.41 | C | EL | 40.7 | 1.27 | 1.18 | B | I | 25.6 | 0.80 | 0.84 | 1.11 | B | EL | 65.1 | 1 |
| DESIGN LOAD RATING | | HL-93 (OPERATING) | N/A | | 1.57 | -- | 1.35 | 0.84 | 1.82 | C | EL | 40.7 | 1.27 | 1.57 | B | I | 25.6 | N/A | -- | -- | -- | -- | -- | 1 |
| DESIGN LOAD RATING | | HS-20 (INVENTORY) | 36.000 | ⟨2⟩ | 1.56 | 56.2 | 1.75 | 0.84 | 1.89 | C | EL | 40.7 | 1.27 | 1.72 | B | I | 25.6 | 0.80 | 0.79 | 1.56 | C | I | 40.7 | 1 |
| DESIGN LOAD RATING | | HS-20 (OPERATING) | 36.000 | | 2.28 | 82.1 | 1.35 | 0.84 | 2.45 | C | EL | 40.7 | 1.27 | 2.28 | B | I | 25.6 | N/A | -- | -- | -- | -- | -- | 1 |
| LEGAL LOAD RATING | SINGLE VEHICLE (SV) | SNSH | 13.500 | | 3.61 | 48.7 | 1.40 | 0.84 | 5.47 | C | EL | 40.7 | 1.27 | 5.45 | A | I | 14.0 | 0.80 | 0.79 | 3.61 | C | I | 40.7 | 1 |
| LEGAL LOAD RATING | SINGLE VEHICLE (SV) | SNGARBS2 | 20.000 | | 2.65 | 53.0 | 1.40 | 0.84 | 4.02 | C | EL | 40.7 | 1.27 | 3.87 | A | I | 14.0 | 0.80 | 0.79 | 2.65 | C | I | 40.7 | 1 |
| LEGAL LOAD RATING | SINGLE VEHICLE (SV) | SNAGRIS2 | 22.000 | | 2.49 | 54.8 | 1.40 | 0.84 | 3.78 | C | EL | 40.7 | 1.27 | 3.59 | A | I | 14.0 | 0.80 | 0.79 | 2.49 | C | I | 40.7 | 1 |
| LEGAL LOAD RATING | SINGLE VEHICLE (SV) | SNCOTTS3 | 27.250 | | 1.79 | 48.8 | 1.40 | 0.84 | 2.72 | C | EL | 40.7 | 1.27 | 2.81 | A,B | I | VARIES | 0.80 | 0.79 | 1.79 | C | I | 40.7 | 1,2 |
| LEGAL LOAD RATING | SINGLE VEHICLE (SV) | SNAGGRS4 | 34.925 | | 1.48 | 51.7 | 1.40 | 0.84 | 2.25 | C | EL | 40.7 | 1.27 | 2.15 | B | I | 25.6 | 0.80 | 0.79 | 1.48 | C | I | 40.7 | 1 |
| LEGAL LOAD RATING | SINGLE VEHICLE (SV) | SNS5A | 35.550 | | 1.45 | 51.5 | 1.40 | 0.84 | 2.20 | C | EL | 40.7 | 1.27 | 2.06 | B | I | 25.6 | 0.80 | 0.79 | 1.45 | C | I | 40.7 | 1 |
| LEGAL LOAD RATING | SINGLE VEHICLE (SV) | SNS6A | 39.950 | | 1.33 | 53.1 | 1.40 | 0.84 | 2.01 | C | EL | 40.7 | 1.27 | 1.84 | B | I | 25.6 | 0.80 | 0.79 | 1.33 | C | I | 40.7 | 1 |
| LEGAL LOAD RATING | SINGLE VEHICLE (SV) | SNS7B | 42.000 | | 1.26 | 52.9 | 1.40 | 0.84 | 1.91 | C | EL | 40.7 | 1.27 | 1.78 | B | I | 25.6 | 0.80 | 0.79 | 1.26 | C | I | 40.7 | 1 |
| LEGAL LOAD RATING | TRUCK TRACTOR SEMI-TRAILER (TTST) | TNAGRIT3 | 33.000 | | 1.62 | 53.5 | 1.40 | 0.84 | 2.45 | C | EL | 40.7 | 1.27 | 2.32 | B | I | 25.6 | 0.80 | 0.79 | 1.62 | C | I | 40.7 | 1 |
| LEGAL LOAD RATING | TRUCK TRACTOR SEMI-TRAILER (TTST) | TNT4A | 33.075 | | 1.62 | 53.6 | 1.40 | 0.84 | 2.46 | C | EL | 40.7 | 1.27 | 2.28 | B | I | 25.6 | 0.80 | 0.79 | 1.62 | C | I | 40.7 | 1 |
| LEGAL LOAD RATING | TRUCK TRACTOR SEMI-TRAILER (TTST) | TNT6A | 41.600 | | 1.32 | 54.9 | 1.40 | 0.84 | 2.00 | C | EL | 40.7 | 1.27 | 1.87 | B | I | 25.6 | 0.80 | 0.79 | 1.32 | C | I | 40.7 | 1 |
| LEGAL LOAD RATING | TRUCK TRACTOR SEMI-TRAILER (TTST) | TNT7A | 42.000 | | 1.32 | 55.4 | 1.40 | 0.84 | 2.01 | C | EL | 40.7 | 1.27 | 1.84 | B | I | 25.6 | 0.80 | 0.79 | 1.32 | C | I | 40.7 | 1 |
| LEGAL LOAD RATING | TRUCK TRACTOR SEMI-TRAILER (TTST) | TNT7B | 42.000 | | 1.36 | 57.1 | 1.40 | 0.84 | 2.06 | C | EL | 40.7 | 1.27 | 1.76 | B | I | 25.6 | 0.80 | 0.79 | 1.36 | C | I | 40.7 | 1 |
| LEGAL LOAD RATING | TRUCK TRACTOR SEMI-TRAILER (TTST) | TNAGRIT4 | 43.000 | | 1.30 | 55.9 | 1.40 | 0.84 | 1.97 | C | EL | 40.7 | 1.27 | 1.77 | B | I | 25.6 | 0.80 | 0.79 | 1.30 | C | I | 40.7 | 1 |
| LEGAL LOAD RATING | TRUCK TRACTOR SEMI-TRAILER (TTST) | TNAGT5A | 45.000 | | 1.23 | 55.4 | 1.40 | 0.84 | 1.86 | C | EL | 40.7 | 1.27 | 1.65 | B | I | 25.6 | 0.80 | 0.79 | 1.23 | C | I | 40.7 | 1 |
| LEGAL LOAD RATING | TRUCK TRACTOR SEMI-TRAILER (TTST) | TNAGT5B | 45.000 | ⟨3⟩ | 1.22 | 54.9 | 1.40 | 0.84 | 1.84 | C | EL | 40.7 | 1.27 | 1.60 | B | I | 25.6 | 0.80 | 0.79 | 1.22 | C | I | 40.7 | 1 |

## LOAD FACTORS:

| | LIMIT STATE | $\gamma_{DC}$ | $\gamma_{DW}$ |
|---|---|---|---|
| DESIGN LOAD RATING FACTORS | STRENGTH I | 1.25 | 1.50 |
| | SERVICE III | 1.00 | 1.00 |

## NOTES:

MINIMUM RATING FACTORS ARE BASED ON THE STRENGTH I AND SERVICE III LIMIT STATES.

ALLOWABLE STRESSES FOR SERVICE III LIMIT STATE ARE AS REQUIRED FOR DESIGN.

## COMMENTS:

1. CONTROLLING SHEAR OCCURS AT PROVIDED DISTANCE FROM EITHER END.
2. SPAN A L=14.0, SPAN B L=25.6
3.
4.

⟨#⟩ CONTROLLING LOAD RATING

⟨1⟩ DESIGN LOAD RATING (HL-93)

⟨2⟩ DESIGN LOAD RATING (HS-20)

⟨3⟩ LEGAL LOAD RATING ✱✱

✱✱ SEE CHART FOR VEHICLE TYPE

GIRDER LOCATION

I - INTERIOR GIRDER
EL - EXTERIOR LEFT GIRDER
ER - EXTERIOR RIGHT GIRDER

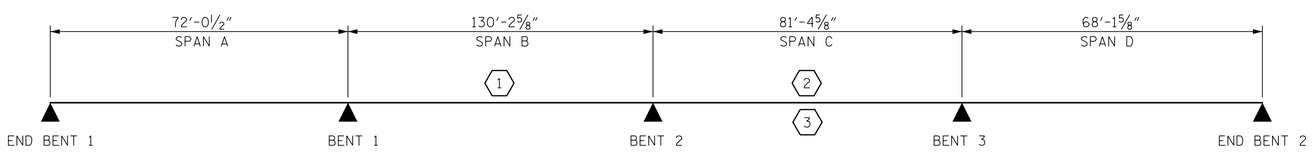


## LRFR SUMMARY

NOTE: SPAN LENGTHS SHOWN ARE BEARING TO BEARING LENGTHS.

PROJECT NO. R-1015

CRAVEN COUNTY

STATION: POC STA. 138+31.09 -L-

DocuSigned by: James P. Gregg

NORTH CAROLINA PROFESSIONAL SEAL 046632 ENGINEER JAMES P. GREGG

11/20/2018

STATE OF NORTH CAROLINA
DEPARTMENT OF TRANSPORTATION
RALEIGH

STANDARD
LRFR SUMMARY FOR PRESTRESSED CONCRETE GIRDERS
(NON-INTERSTATE TRAFFIC)
RIGHT LANE

| REVISIONS | | | | | | SHEET NO. |
|---|---|---|---|---|---|---|
| NO. | BY | DATE | NO. | BY | DATE | S04-5 |
| 1 | | | 3 | | | TOTAL SHEETS |
| 2 | | | 4 | | | 46 |

HNTB NORTH CAROLINA, P.C.
NC License No. C-1554
343 E. Six Forks Rd., Suite 200, Raleigh, N.C. 27609

DRAWN BY A. SMITH DATE 7/18
CHECKED BY E. JOWZA DATE 9/18
DESIGN ENGINEER OF RECORD J. GREGG DATE 10/18

DWG. NO. 5

ASSEMBLED BY : A. SMITH DATE : 7/18
CHECKED BY : E. JOWZA DATE : 9/18

DRAWN BY : MAA 1/08
CHECKED BY : GM/DI 2/08

REV. 11/12/08RR MAA/GM
REV. 10/1/11 MAA/GM
REV. 12/17 MAA/THC

DOCUMENT NOT CONSIDERED FINAL UNLESS ALL SIGNATURES COMPLETED

STD. NO. LRFR1

DocuSign Envelope ID: 11A1261F-14B1-49AE-A388-908A64E11071

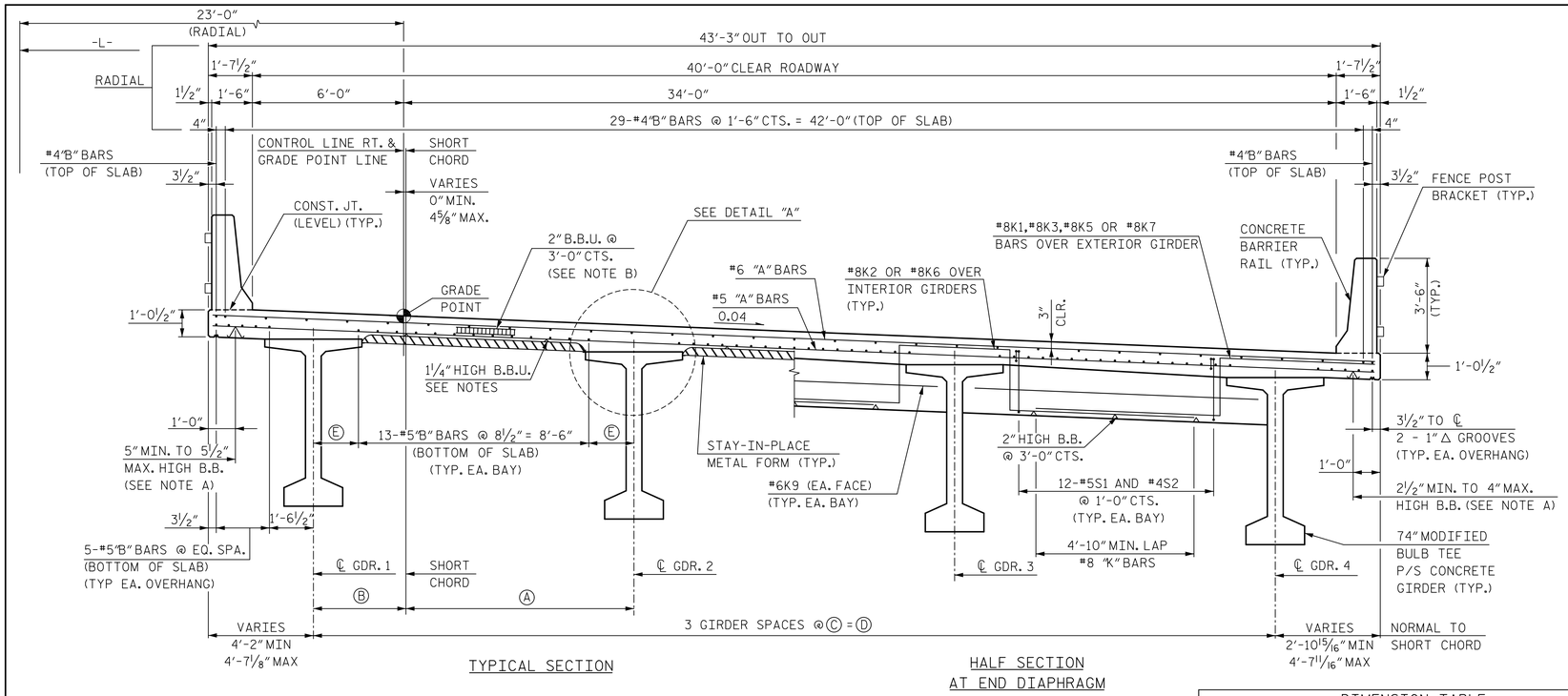


TYPICAL SECTION

HALF SECTION
AT END DIAPHRAGM

## TYPICAL SECTION RIGHT LANE BRIDGE

FOR SECTION THRU END BENT DIAPHRAGM, SEE SECTION A-A, SHEET 2 OF 2.

| DIMENSION TABLE | | | | | |
|---|---|---|---|---|---|
| | Ⓐ | Ⓑ | Ⓒ | Ⓓ | Ⓔ |
| SPAN A | 8'-7" | 3'-5" | 12'-0" | 36'-0" | 1'-9" |
| SPAN B | 8'-5" | 3'-5" | 11'-10" | 35'-6" | 1'-8" |
| SPAN C | 8'-3" | 3'-5" | 11'-8" | 35'-0" | 1'-7" |
| SPAN D | 8'-2" | 3'-5" | 11'-7" | 34'-9" | 1'-6½" |

## NOTES:

PROVIDE 1¼" HIGH BEAM BOLSTERS UPPER AT 4'-0" CTS. ATOP THE METAL STAY-IN-PLACE FORMS TO SUPPORT THE BOTTOM MAT OF "A" BARS. WHEN USING REMOVABLE FORMS, PROVIDE CONTINUOUS HIGH CHAIRS FOR METAL DECK (C.H.C.M.) @ 4'-0" CTS. WITH A HEIGHT TO SUPPORT THE BOTTOM MAT OF "A" BARS A CLEAR DISTANCE OF 2½" ABOVE THE TOP OF THE REMOVABLE FORM.

PREVIOUSLY CAST CONCRETE IN A CONTINUOUS UNIT SHALL HAVE ATTAINED A MINIMUM COMPRESSIVE STRENGTH OF 3,000 PSI BEFORE ADDITIONAL CONCRETE IS CAST IN THE UNIT.

LONGITUDINAL STEEL MAY BE SHIFTED SLIGHTLY, AS NECESSARY, TO AVOID INTERFERENCE WITH STIRRUPS IN PRESTRESSED CONCRETE GIRDERS.

NO CHAMFER IS REQUIRED ON CORNERS OF GIRDER BUILDUPS.

#5G1 AND #5G2 BARS MAY BE SHIFTED SLIGHTLY, AS NECESSARY, TO CLEAR REINFORCING AND STIRRUPS.

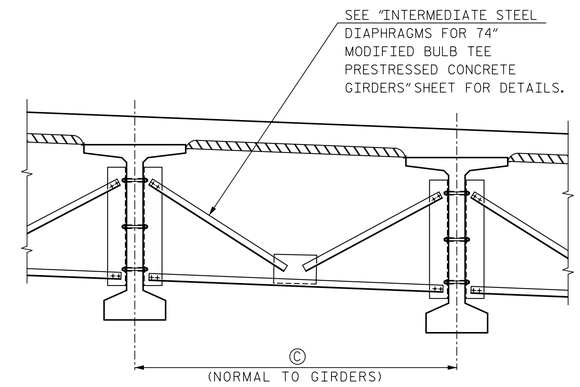


## PARTIAL TYPICAL SECTION

(SHOWING INTERMEDIATE DIAPHRAGMS)

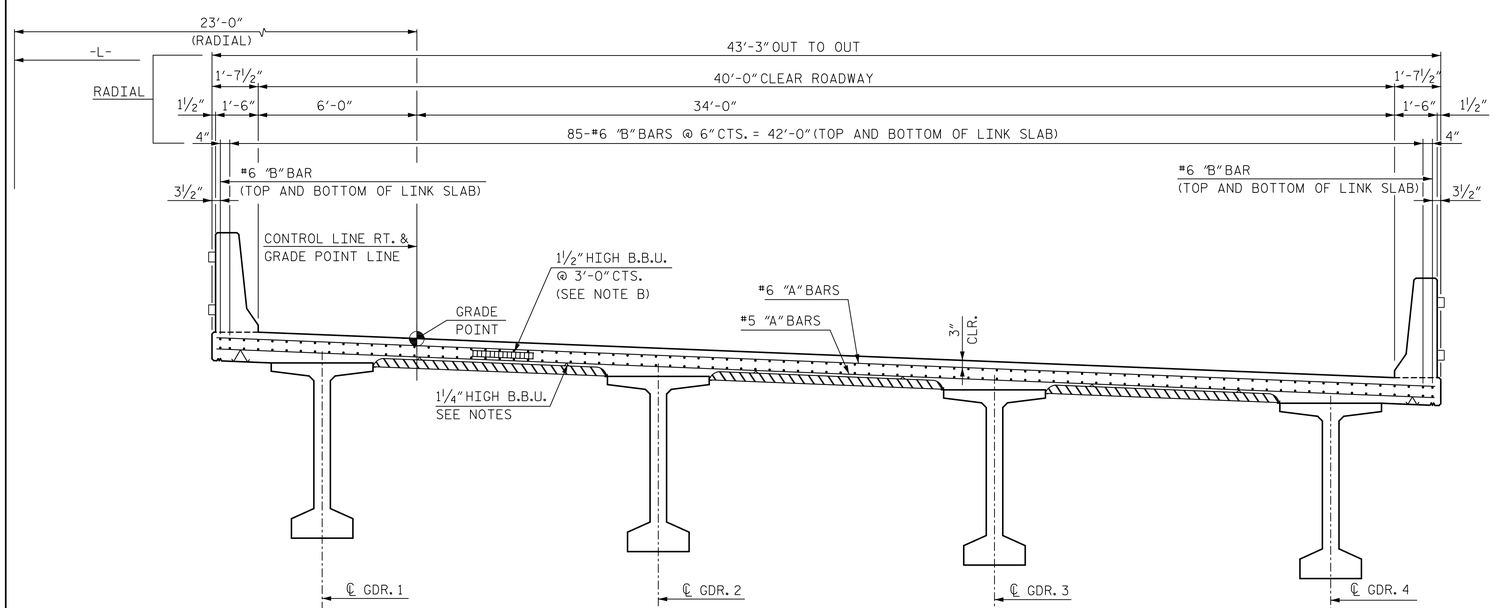


## TYPICAL SECTION THROUGH LINK SLAB

FOR DETAILS NOT SHOWN, SEE "TYPICAL SECTION RIGHT LANE BRIDGE"

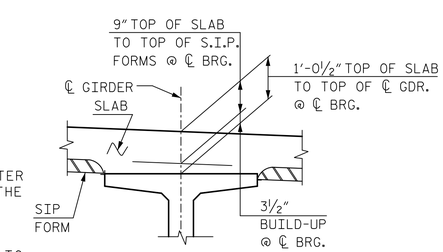


## DETAIL "A"

NOTE A: THE HEIGHT OF THE BEAM BOLSTER VARIES ALONG THE LENGTH OF THE SPAN DUE TO CAMBER AND THE VARYING HEIGHT REQUIRED FOR THE BUILDUP. THE CONTRACTOR SHALL HAVE SUFFICIENT SIZES TO PROPERLY SUPPORT THE REINFORCING STEEL.

NOTE B: TO MAINTAIN PROPER LOCATION OF "A" BARS IN TOP OF SLAB, BBU DEPTH MUST VARY IN UNIT AS THE MAXIMUM SIZE OF THE "B" BARS IN THE TOP OF SLAB VARIES. A 2" BBU SHALL BE USED WHERE ONLY #4 "B" BARS ARE PRESENT. WHERE #6 "B" BARS ARE PRESENT, A 1½" BBU SHALL BE USED.

**PROJECT NO.** R-1015

CRAVEN **COUNTY**

**STATION:** POC STA. 138+31.09 -L-

SHEET 1 OF 2

DocuSigned by: James P. Gregg
DocuSigned by: 9BDFE024AB9C404...

NORTH CAROLINA PROFESSIONAL SEAL 046632 ENGINEER JAMES P. GREGG

11/20/2018

STATE OF NORTH CAROLINA
DEPARTMENT OF TRANSPORTATION
RALEIGH

SUPERSTRUCTURE

TYPICAL SECTIONS

RIGHT LANE

HNTB NORTH CAROLINA, P.C.
NC License No. C-1554
343 E. Six Forks Rd., Suite 200, Raleigh, N.C. 27609

DRAWN BY J. PHILLIPS DATE 9/18
CHECKED BY D. LAWRENCE DATE 10/18
DESIGN ENGINEER OF RECORD J. GREGG DATE 10/18

DWG. NO. 6

**DOCUMENT NOT CONSIDERED FINAL UNLESS ALL SIGNATURES COMPLETED**

| REVISIONS | | | | | | SHEET NO. |
|---|---|---|---|---|---|---|
| NO. | BY | DATE | NO. | BY | DATE | S04-6 |
| 1 | | | 3 | | | TOTAL SHEETS |
| 2 | | | 4 | | | 46 |

DocuSign Envelope ID: 88A0B777-7A2E-445F-ADAD-2E515F175E6D

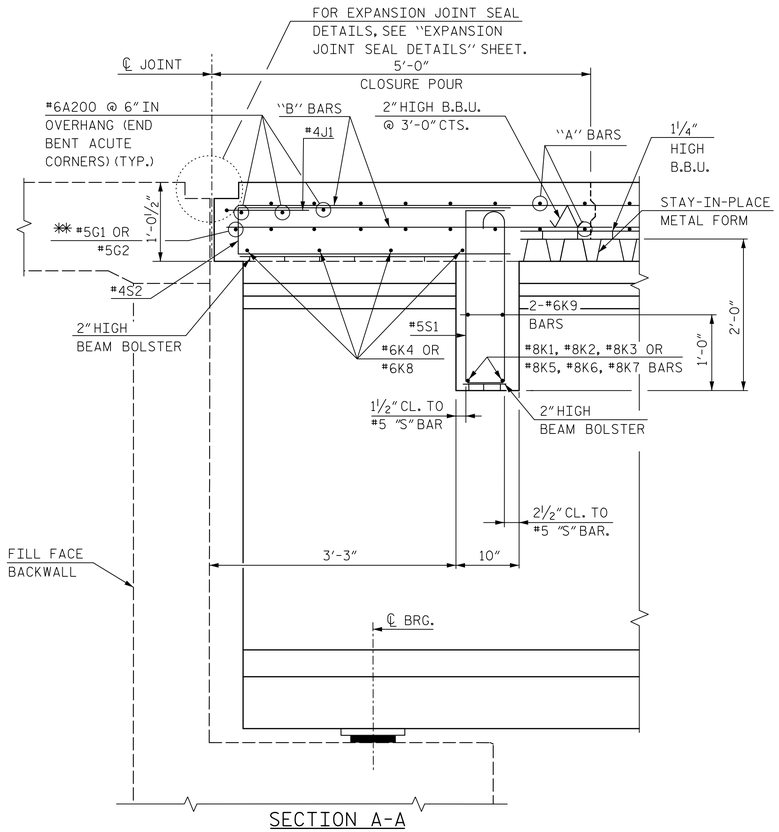


## SECTION A-A

SECTION NORMAL THRU END BENT 1 & END BENT 2 DIAPHRAGM

✱✱ #5 "G" BAR MAY BE SHIFTED SLIGHTLY AS NECESSARY TO CLEAR REINFORCING STEEL AND STIRRUPS.

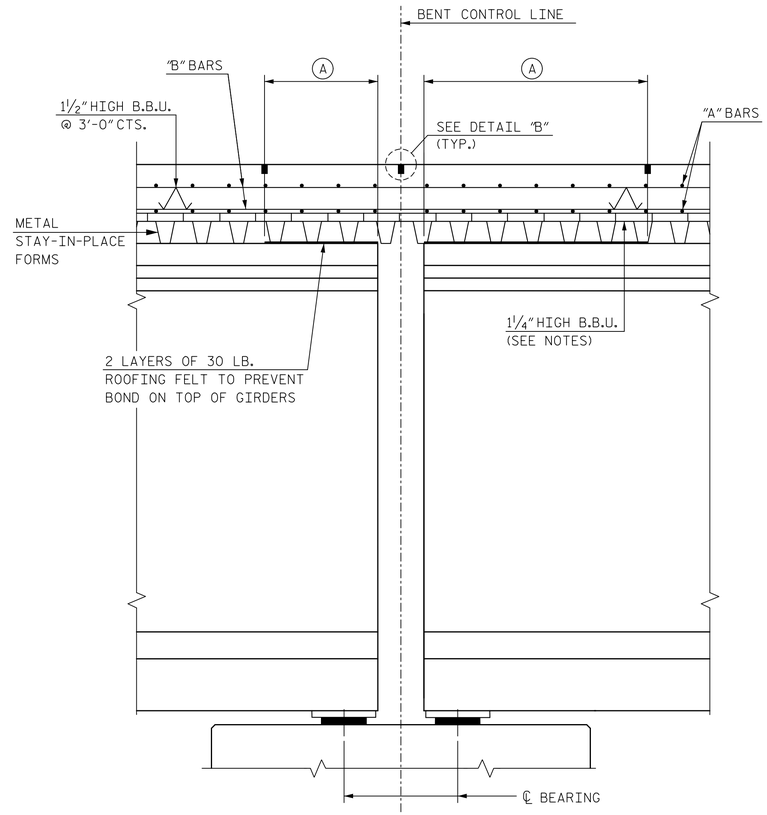


## SECTION THROUGH BENT

SECTION PARALLEL TO BEAM AT BENT 1 SHOWN, BENT 2 AND 3 SIMILAR

| | Ⓐ |
|---|---|
| SPAN A | 3'-8" |
| SPAN B | 6'-7" |
| SPAN C | 4'-2" |
| SPAN D | 3'-6" |

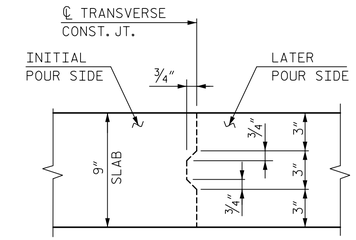


## DECK SLAB TRANSVERSE CONSTRUCTION JOINT DETAIL

REINFORCING STEEL IN SLAB NOT SHOWN. LONGITUDINAL REINFORCING STEEL SHALL BE CONTINUOUS THROUGH JOINT.

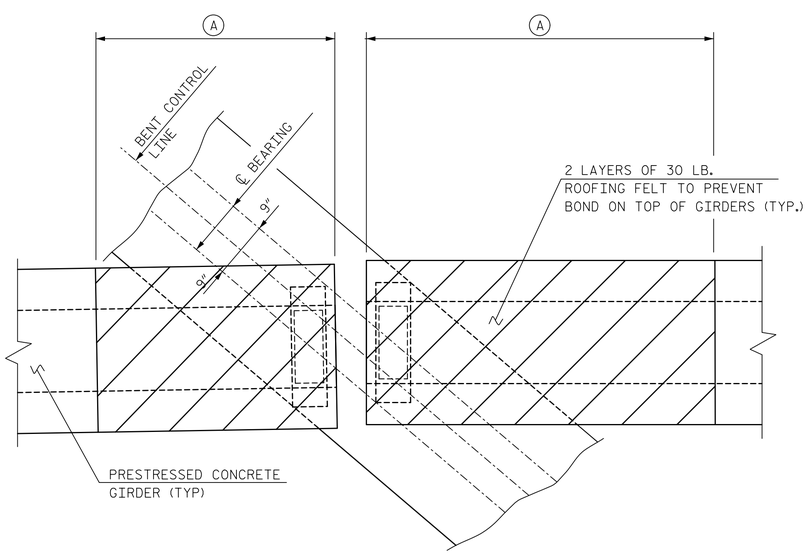


## PLAN @ BENT

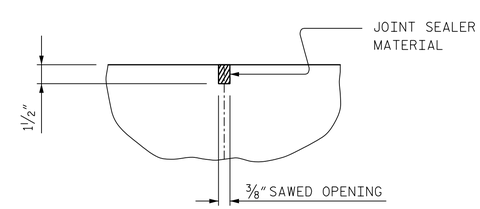


## DETAIL "B"

PROJECT NO. R-1015

CRAVEN COUNTY

STATION: POC STA. 138+31.09 -L-

SHEET 2 OF 2

STATE OF NORTH CAROLINA
DEPARTMENT OF TRANSPORTATION
RALEIGH

SUPERSTRUCTURE

TYPICAL SECTION DETAILS

RIGHT LANE

NORTH CAROLINA PROFESSIONAL SEAL 046632 ENGINEER JAMES P. GREGG

DocuSigned by: James P. Gregg

12/6/2018

DOCUMENT NOT CONSIDERED FINAL UNLESS ALL SIGNATURES COMPLETED

HNTB NORTH CAROLINA, P.C.
NC License No. C-1554
343 E. Six Forks Rd., Suite 200, Raleigh, N.C. 27609

DRAWN BY J. PHILLIPS DATE 9/18
CHECKED BY D. LAWRENCE DATE 10/18
DESIGN ENGINEER OF RECORD J. GREGG DATE 10/18

DWG. NO. 7

| REVISIONS | | | | | | SHEET NO. |
|---|---|---|---|---|---|---|
| NO. | BY | DATE | NO. | BY | DATE | S04-7 |
| 1 | | | 3 | | | TOTAL SHEETS |
| 2 | | | 4 | | | 46 |

DocuSign Envelope ID: 11A1261F-14B1-49AE-A388-908A64E11071

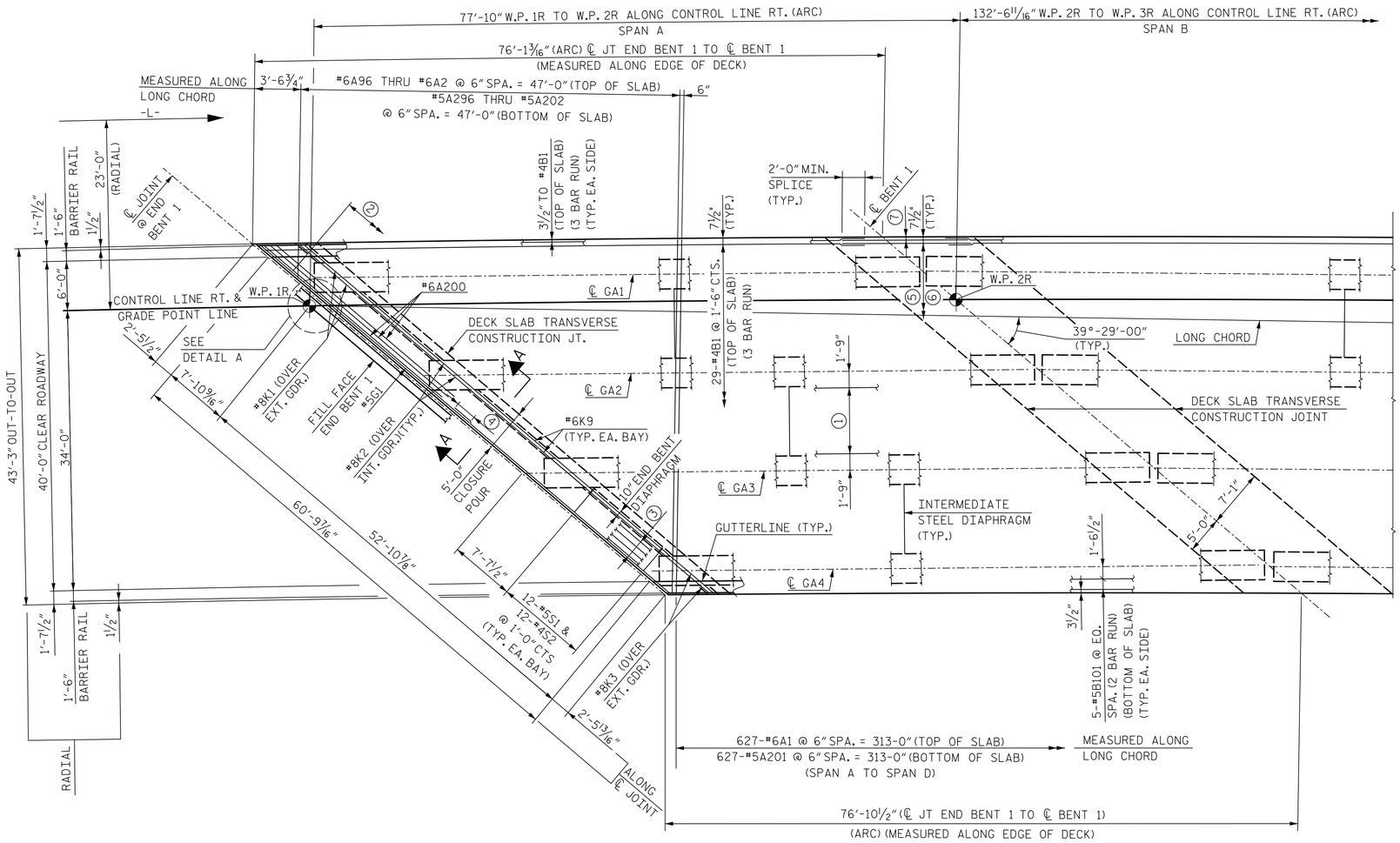


PLAN OF SPAN A

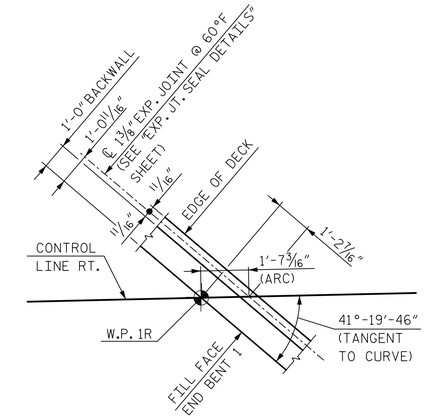


DETAIL A

NOTES:

FOR CONCRETE BARRIER RAIL DIMENSIONS, REINFORCING STEEL, AND JOINT SPACING, SEE "CONCRETE BARRIER RAIL" SHEET.

FOR SECTION VIEWS, SEE "SUPERSTRUCTURE TYPICAL SECTION DETAILS" SHEET 2 OF 2.

FOR INTERMEDIATE STEEL DIAPHRAGMS, SEE "INTERMEDIATE STEEL DIAPHRAGMS FOR 74" MODIFIED BULB TEE PRESTRESSED CONCRETE GIRDERS" SHEET FOR DETAILS. FOR LOCATION, SEE "SUPERSTRUCTURE FRAMING PLANS" SHEET.

1. 13-#5B101 @ 8 1/2" CTS. = 8'-6" (2 BAR RUN WITH 2'-0" MIN. SPLICE) (BOTTOM OF SLAB) (TYP. EA. BAY)
2. 60-4J1 BARS (SEE "EXP. JT. DETAILS SHEET)
3. 4-#6K4 (BOTTOM OF SLAB) (2 BAR RUN WITH 2'-5" MIN. SPLICE)
4. 2'-5" MIN. SPLICE
5. 85-#6B5 @ 6" CTS. = 42'-0" (TOP OF SLAB IN LINK SLAB AREA)
6. 85-#6B105 @ 6" = 42'-0" (BOTTOM OF SLAB IN LINK SLAB AREA)
7. 3 1/2" TO #6B5 (TOP OF SLAB) AND #6B105 (BOTTOM OF SLAB) (TYP. EA. SIDE) (IN LINK SLAB AREA)

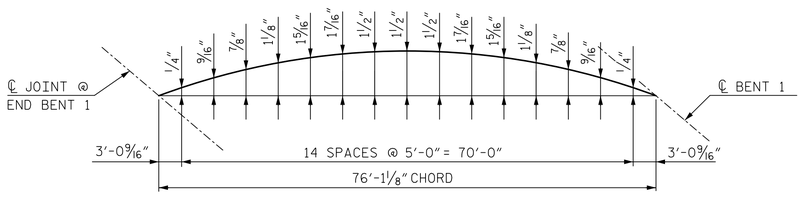


LEFT EDGE OF DECK

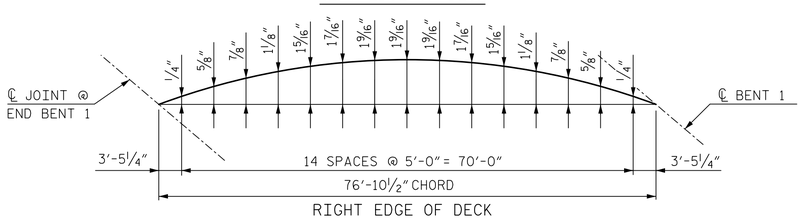


RIGHT EDGE OF DECK

ARC OFFSETS SPAN A

PROJECT NO. R-1015

CRAVEN COUNTY

STATION: POC STA. 138+31.09 -L-

DocuSigned by: James P. Gregg
DocuSign Envelope ID: 0324AB9C-404...

NORTH CAROLINA PROFESSIONAL SEAL 046632 ENGINEER JAMES P. GREGG

11/20/2018

DOCUMENT NOT CONSIDERED FINAL UNLESS ALL SIGNATURES COMPLETED

HNTB

HNTB NORTH CAROLINA, P.C.
NC License No. C-1554
343 E. Six Forks Rd., Suite 200, Raleigh, N.C. 27609

DRAWN BY J. PHILLIPS DATE 9/18
CHECKED BY D. LAWRENCE DATE 10/18
DESIGN ENGINEER OF RECORD J. GREGG DATE 10/18

DWG. NO. 8

STATE OF NORTH CAROLINA
DEPARTMENT OF TRANSPORTATION
RALEIGH

SUPERSTRUCTURE

PLAN OF SPAN A

RIGHT LANE

| REVISIONS | | | | | | SHEET NO. |
|---|---|---|---|---|---|---|
| NO. | BY | DATE | NO. | BY | DATE | S04-8 |
| 1 | | | 3 | | | TOTAL SHEETS |
| 2 | | | 4 | | | 46 |

DocuSign Envelope ID: 11A1261F-14B1-49AE-A388-908A64E11071

NOTES:

FOR NOTES, SEE "SUPERSTRUCTURE PLAN OF SPAN A" SHEET.

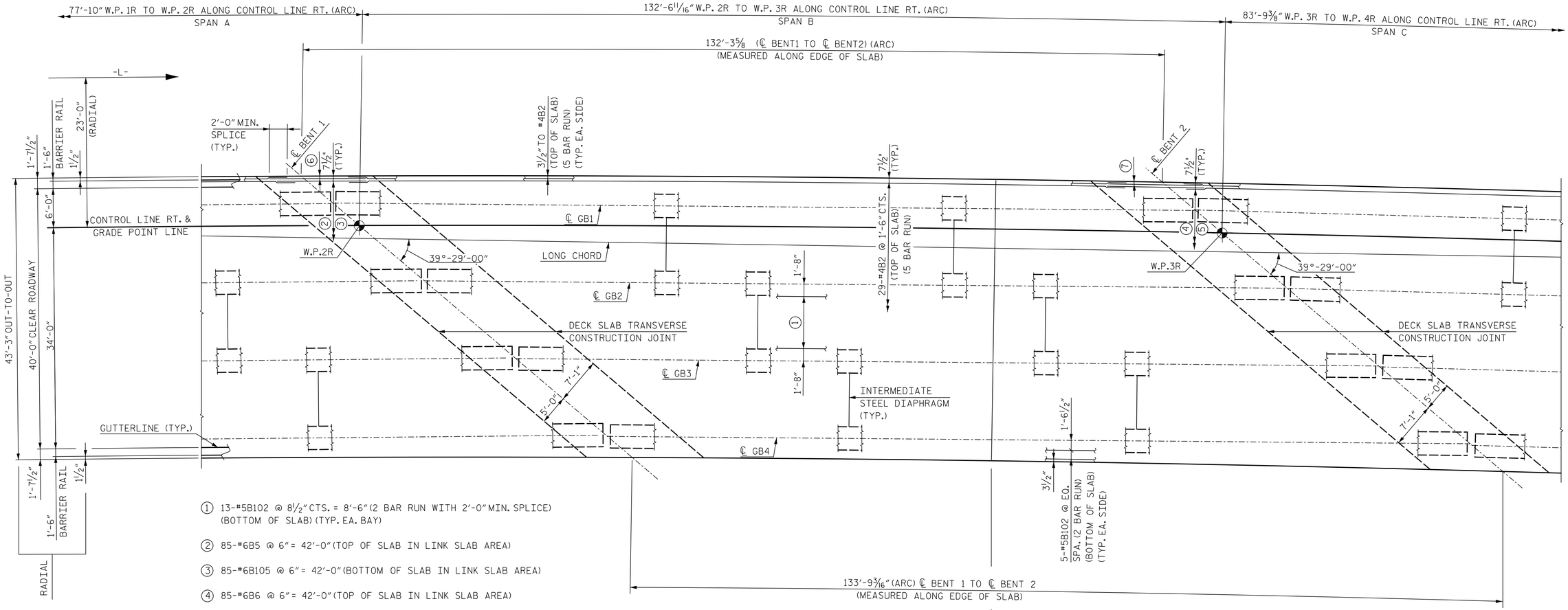


① 13-#5B102 @ 8 1/2" CTS. = 8'-6" (2 BAR RUN WITH 2'-0" MIN. SPLICE) (BOTTOM OF SLAB) (TYP. EA. BAY)

② 85-#6B5 @ 6" = 42'-0" (TOP OF SLAB IN LINK SLAB AREA)

③ 85-#6B105 @ 6" = 42'-0" (BOTTOM OF SLAB IN LINK SLAB AREA)

④ 85-#6B6 @ 6" = 42'-0" (TOP OF SLAB IN LINK SLAB AREA)

⑤ 85-#6B106 @ 6" = 42'-0" (BOTTOM OF SLAB IN LINK SLAB AREA)

⑥ 3 1/2" TO #6B5 (TOP OF SLAB) AND #6B105 (BOTTOM OF SLAB) (TYP. EA. SIDE) (IN LINK SLAB AREA)

⑦ 3 1/2" TO #6B6 (TOP OF SLAB) AND #6B106 (BOTTOM OF SLAB) (TYP. EA. SIDE) (IN LINK SLAB AREA)

PLAN OF SPAN B

PROJECT NO. R-1015

CRAVEN COUNTY

STATION: POC STA. 138+31.09 -L-

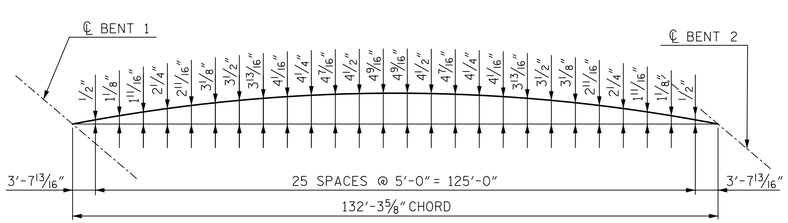


LEFT EDGE OF DECK

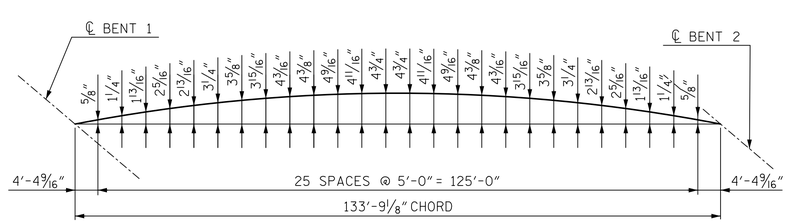


RIGHT EDGE OF DECK

ARC OFFSETS SPAN B

DocuSigned by: James P. Gregg

NORTH CAROLINA PROFESSIONAL SEAL 046632 ENGINEER JAMES P. GREGG

11/20/2018

STATE OF NORTH CAROLINA
DEPARTMENT OF TRANSPORTATION
RALEIGH

SUPERSTRUCTURE

PLAN OF SPAN B

RIGHT LANE

HNTB NORTH CAROLINA, P.C.
NC License No. C-1554
343 E. Six Forks Rd., Suite 200, Raleigh, N.C. 27609

DRAWN BY J. PHILLIPS DATE 9/18
CHECKED BY D. LAWRENCE DATE 10/18
DESIGN ENGINEER OF RECORD J. GREGG DATE 10/18

DWG. NO. 9

DOCUMENT NOT CONSIDERED FINAL UNLESS ALL SIGNATURES COMPLETED

| REVISIONS | | | | | | SHEET NO. |
|---|---|---|---|---|---|---|
| NO. | BY | DATE | NO. | BY | DATE | S04-9 |
| 1 | | | 3 | | | TOTAL SHEETS |
| 2 | | | 4 | | | 46 |

DocuSign Envelope ID: 11A1261F-14B1-49AE-A388-908A64E11071

NOTES:

FOR NOTES, SEE "SUPERSTRUCTURE PLAN OF SPAN A" SHEET.

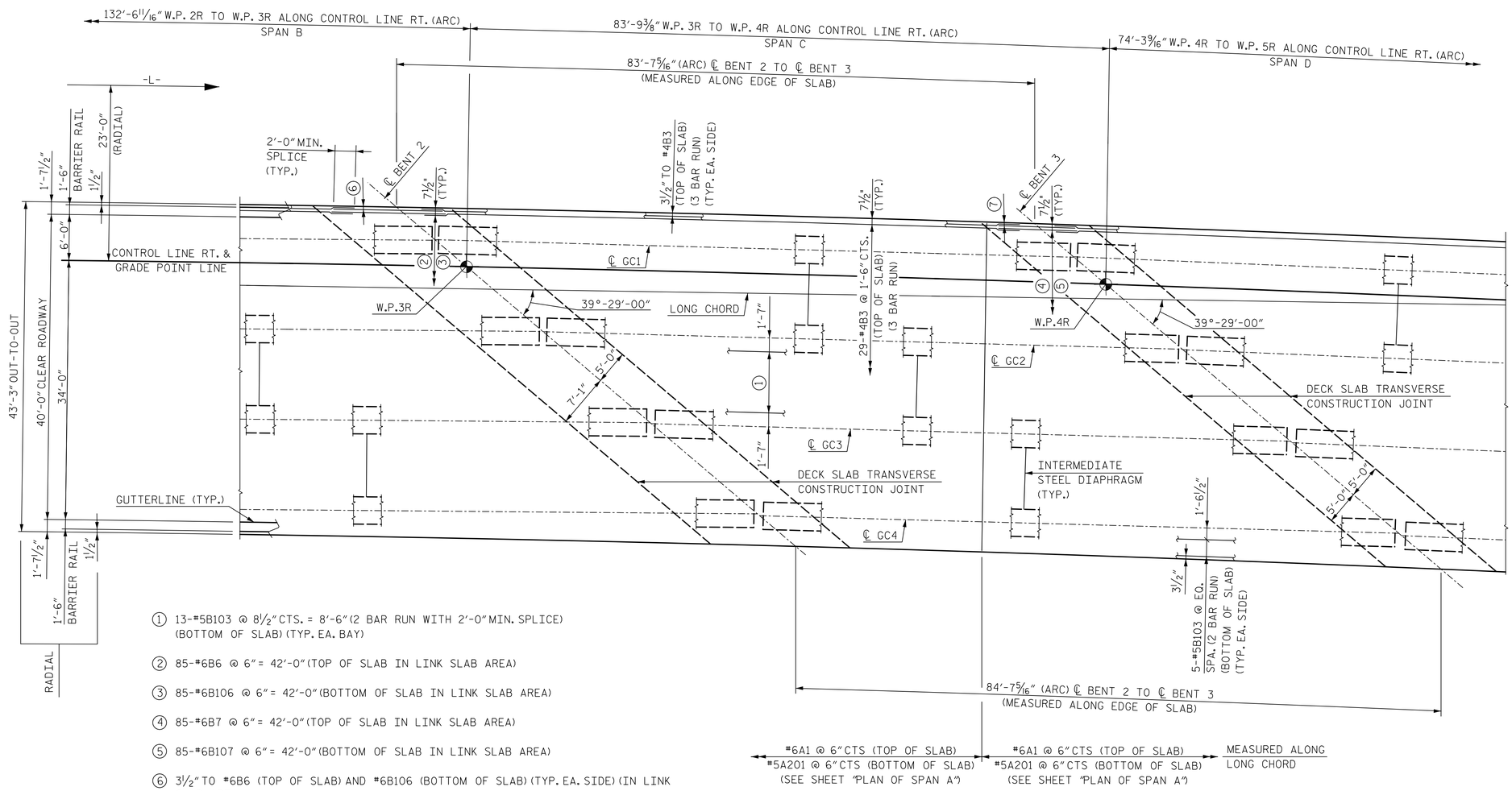


PLAN OF SPAN C

① 13-#5B103 @ 8 1/2" CTS. = 8'-6" (2 BAR RUN WITH 2'-0" MIN. SPLICE) (BOTTOM OF SLAB) (TYP. EA. BAY)

② 85-#6B6 @ 6" = 42'-0" (TOP OF SLAB IN LINK SLAB AREA)

③ 85-#6B106 @ 6" = 42'-0" (BOTTOM OF SLAB IN LINK SLAB AREA)

④ 85-#6B7 @ 6" = 42'-0" (TOP OF SLAB IN LINK SLAB AREA)

⑤ 85-#6B107 @ 6" = 42'-0" (BOTTOM OF SLAB IN LINK SLAB AREA)

⑥ 3 1/2" TO #6B6 (TOP OF SLAB) AND #6B106 (BOTTOM OF SLAB) (TYP. EA. SIDE) (IN LINK SLAB AREA)

⑦ 3 1/2" TO #6B7 (TOP OF SLAB) AND #6B107 (BOTTOM OF SLAB) (TYP. EA. SIDE) (IN LINK SLAB AREA)

PROJECT NO. R-1015

CRAVEN COUNTY

STATION: POC STA. 138+31.09 -L-

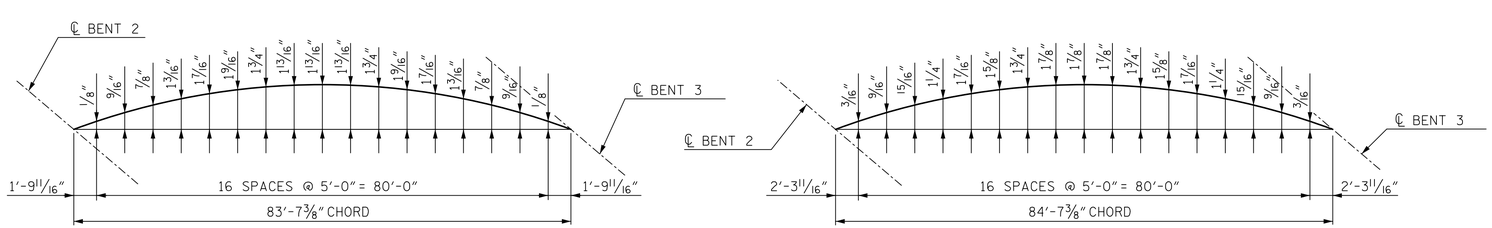


LEFT EDGE OF DECK

RIGHT EDGE OF DECK

ARC OFFSETS SPAN C

DocuSigned by: James P. Gregg

NORTH CAROLINA PROFESSIONAL SEAL 046632 ENGINEER JAMES P. GREGG

11/20/2018

HNTB

HNTB NORTH CAROLINA, P.C.
NC License No. C-1554
343 E. Six Forks Rd., Suite 200, Raleigh, N.C. 27609

DRAWN BY J. PHILLIPS DATE 9/18
CHECKED BY D. LAWRENCE DATE 10/18
DESIGN ENGINEER OF RECORD J. GREGG DATE 10/18

DWG. NO. 10

**DOCUMENT NOT CONSIDERED FINAL UNLESS ALL SIGNATURES COMPLETED**

STATE OF NORTH CAROLINA
DEPARTMENT OF TRANSPORTATION
RALEIGH

SUPERSTRUCTURE

PLAN OF SPAN C

RIGHT LANE

| REVISIONS | | | | | | SHEET NO. |
|---|---|---|---|---|---|---|
| NO. | BY | DATE | NO. | BY | DATE | S04-10 |
| 1 | | | 3 | | | TOTAL SHEETS |
| 2 | | | 4 | | | 46 |

DocuSign Envelope ID: 11A1261F-14B1-49AE-A388-908A64E11071

NOTES:

FOR NOTES, SEE "SUPERSTRUCTURE PLAN OF SPAN A" SHEET.

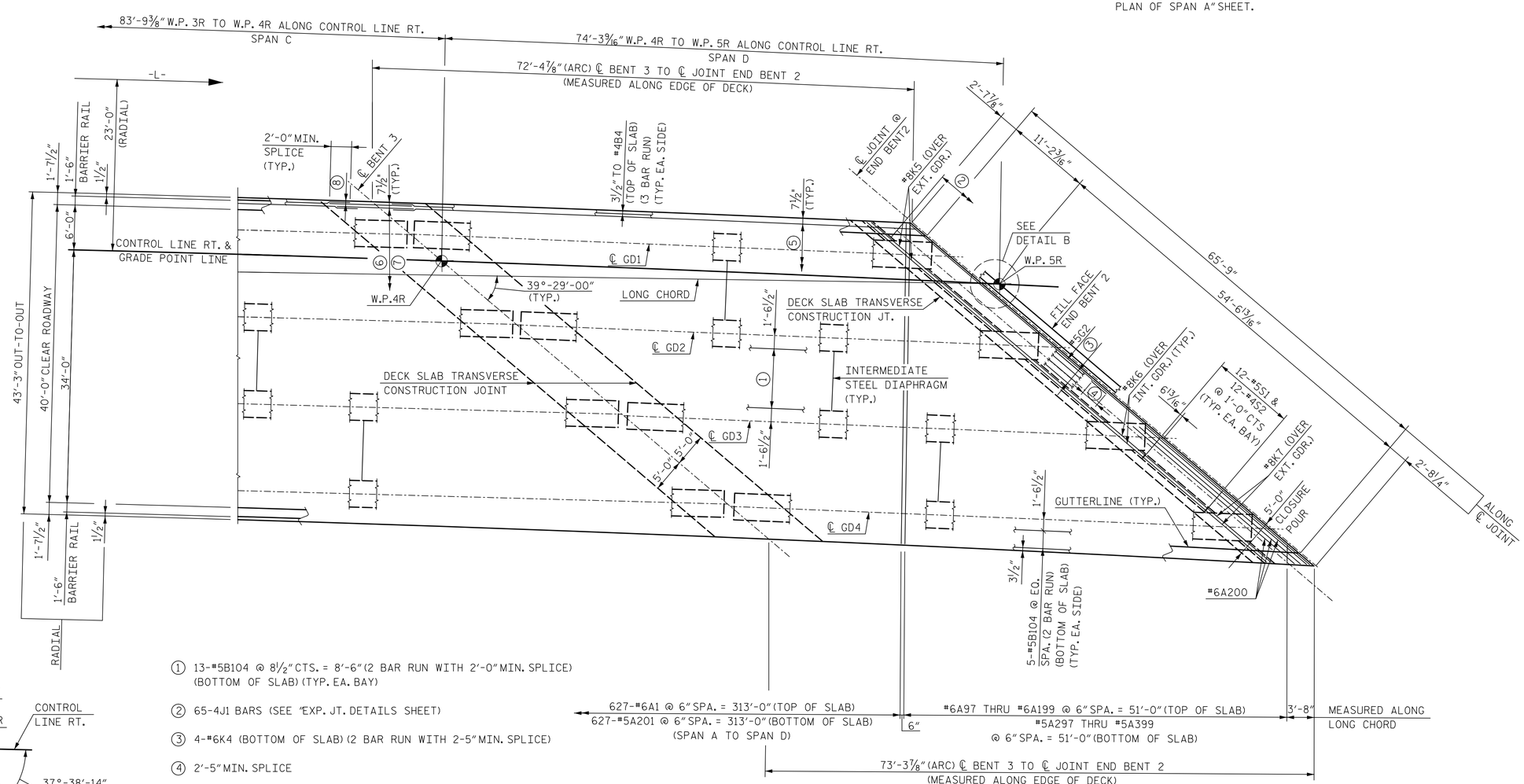


PLAN OF SPAN D

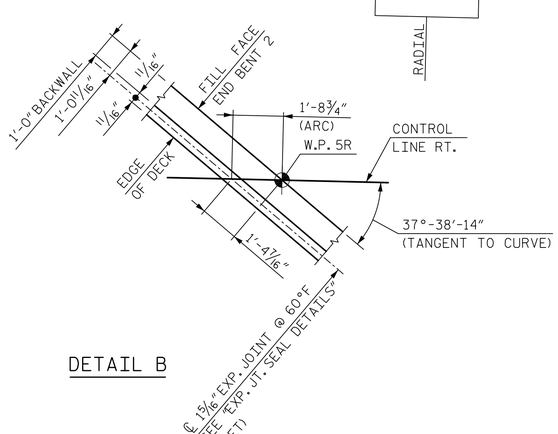


DETAIL B

1. 13-#5B104 @ 8 1/2" CTS. = 8'-6" (2 BAR RUN WITH 2'-0" MIN. SPLICE) (BOTTOM OF SLAB) (TYP. EA. BAY)
2. 65-4J1 BARS (SEE "EXP. JT. DETAILS SHEET)
3. 4-#6K4 (BOTTOM OF SLAB) (2 BAR RUN WITH 2-5" MIN. SPLICE)
4. 2'-5" MIN. SPLICE
5. 29-#4B4 @ 1'-6" CTS. = 42'-0" (TOP OF SLAB) (3 BAR RUN)
6. 85-#6B7 @ 6" CTS. = 42'-0" (TOP OF SLAB IN LINK SLAB AREA)
7. 85-#6B107 @ 6" = 42'-0" (BOTTOM OF SLAB IN LINK SLAB AREA)
8. 3 1/2" TO #6B7 (TOP OF SLAB) AND #6B107 (BOTTOM OF SLAB) (TYP. EA. SIDE) (IN LINK SLAB AREA)

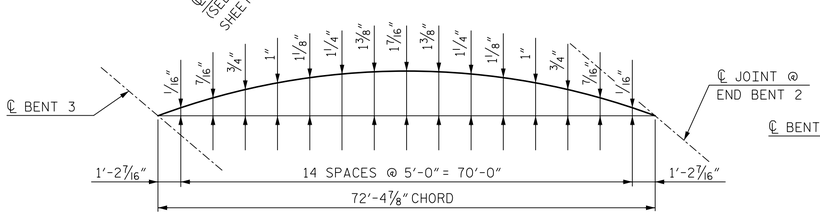


LEFT EDGE OF DECK

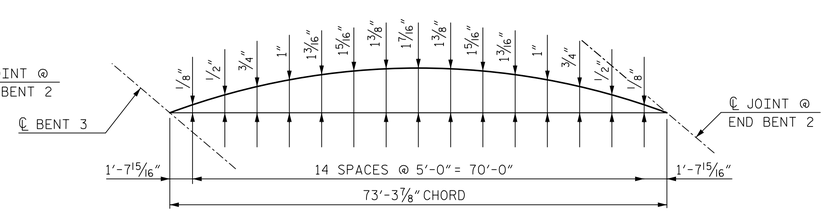


RIGHT EDGE OF DECK

ARC OFFSETS SPAN D

PROJECT NO. R-1015

CRAVEN COUNTY

STATION: POC STA. 138+31.09 -L-

DocuSigned by: James P. Gregg 8BDE02AAB8C404...

NORTH CAROLINA PROFESSIONAL SEAL 046632 ENGINEER JAMES P. GREGG

11/20/2018

STATE OF NORTH CAROLINA
DEPARTMENT OF TRANSPORTATION
RALEIGH

SUPERSTRUCTURE

PLAN OF SPAN D

RIGHT LANE

HNTB NORTH CAROLINA, P.C.
NC License No. C-1554
343 E. Six Forks Rd., Suite 200, Raleigh, N.C. 27609

DRAWN BY J. PHILLIPS DATE 9/18
CHECKED BY D. LAWRENCE DATE 10/18
DESIGN ENGINEER OF RECORD J. GREGG DATE 10/18

DWG. NO. 11

DOCUMENT NOT CONSIDERED FINAL UNLESS ALL SIGNATURES COMPLETED

| REVISIONS | | | | | | SHEET NO. |
|---|---|---|---|---|---|---|
| NO. | BY | DATE | NO. | BY | DATE | S04-11 |
| 1 | | | 3 | | | TOTAL SHEETS |
| 2 | | | 4 | | | 46 |

DocuSign Envelope ID: 11A1261F-14B1-49AE-A388-908A64E11071

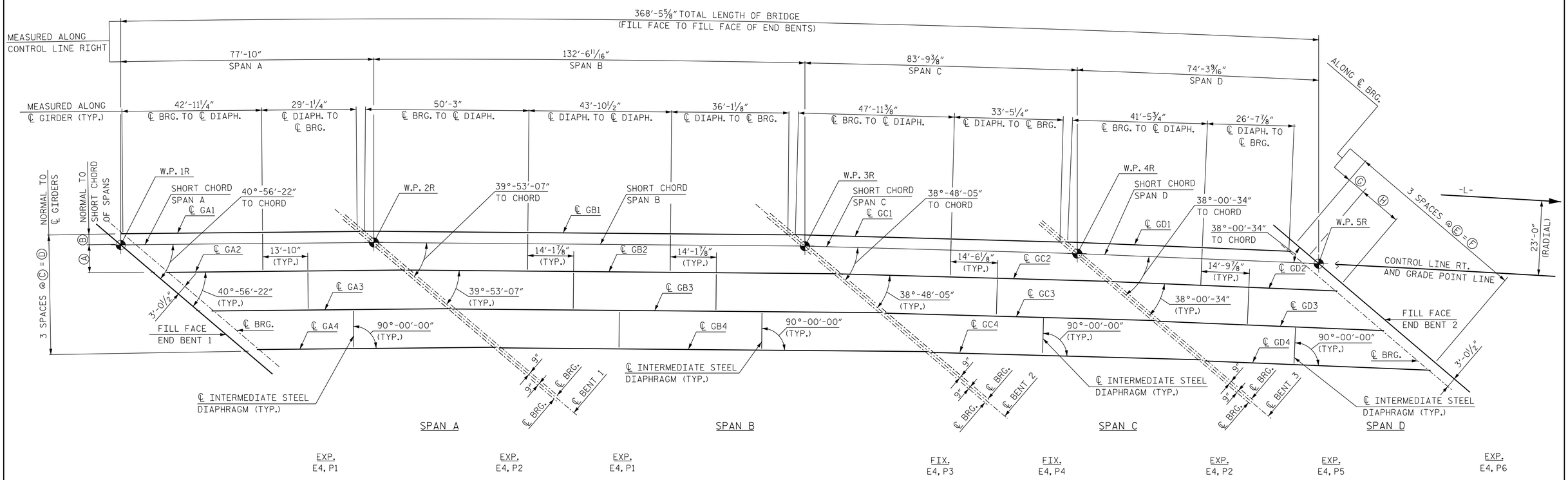


## FRAMING PLAN

| GIRDER LAYOUT DIMENSION TABLE | | | | | | | | |
|---|---|---|---|---|---|---|---|---|
| LOCATION \ DIM. | Ⓐ | Ⓑ | Ⓒ | Ⓓ | Ⓔ | Ⓕ | Ⓖ | Ⓗ |
| SPAN A | 8'-7" | 3'-5" | 12'-0" | 36'-0" | 18'-3 3/4" | 54'-11 1/4" | 5'-2 9/16" | 13'-1 3/16" |
| SPAN B | 8'-5" | 3'-5" | 11'-10" | 35'-6" | 18'-5 1/16" | 55'-4 5/16" | 5'-3 15/16" | 13'-1 1/2" |
| SPAN C | 8'-3" | 3'-5" | 11'-8" | 35'-0" | 18'-7 1/16" | 55'-10 5/16" | 5'-5 7/16" | 13'-2" |
| SPAN D | 8'-2" | 3'-5" | 11'-7" | 34'-9" | 18'-9 3/4" | 56'-5 1/4" | 5'-6 9/16" | 13'-3 3/16" |

NOTES:

ALL DIMENSIONS MEASURED ALONG ℄ GIRDER UNLESS NOTED OTHERWISE.

FOR INTERMEDIATE STEEL DIAPHRAGM DETAILS, SEE "INTERMEDIATE STEEL DIAPHRAGMS FOR 74" MODIFIED BULB TEE PRESTRESSED CONCRETE GIRDERS" SHEET.

FOR GIRDER ELEVATIONS AND DETAILS, SEE "74" PRESTRESSED CONCRETE MODIFIED BULB TEE GIRDER" SHEETS.

NOTES:

"EXP." DENOTES EXPANSION BEARING ASSEMBLY.

"FIX." DENOTES FIXED BEARING ASSEMBLY.

"E" DENOTES ELASTOMERIC BEARING PAD MARK.

"P" DENOTES STEEL SOLE PLATE MARK.

GIRDERS IN EACH SPAN ARE SET PARALLEL TO SHORT CHORD.

PROJECT NO. R-1015
CRAVEN COUNTY
STATION: POC STA. 138+31.09 -L-

DocuSigned by: James P. Gregg
80FE024AB0C404...

NORTH CAROLINA PROFESSIONAL SEAL 046632 ENGINEER JAMES P. GREGG
11/20/2018

STATE OF NORTH CAROLINA
DEPARTMENT OF TRANSPORTATION
RALEIGH

SUPERSTRUCTURE

FRAMING PLAN
RIGHT LANE

HNTB
HNTB NORTH CAROLINA, P.C.
NC License No. C-1554
343 E. Six Forks Rd., Suite 200, Raleigh, N.C. 27609

DRAWN BY A. SMITH DATE 7/18
CHECKED BY E. JOWZA DATE 9/18
DESIGN ENGINEER OF RECORD J. GREGG DATE 10/18
DWG. NO. 12

REVISIONS

| NO. | BY | DATE | NO. | BY | DATE |
|---|---|---|---|---|---|
| 1 | | | 3 | | |
| 2 | | | 4 | | |

SHEET NO. S04-12
TOTAL SHEETS 46

DOCUMENT NOT CONSIDERED FINAL UNLESS ALL SIGNATURES COMPLETED

DocuSign Envelope ID: 88A0B777-7A2E-445F-ADAD-2E515F175E6D

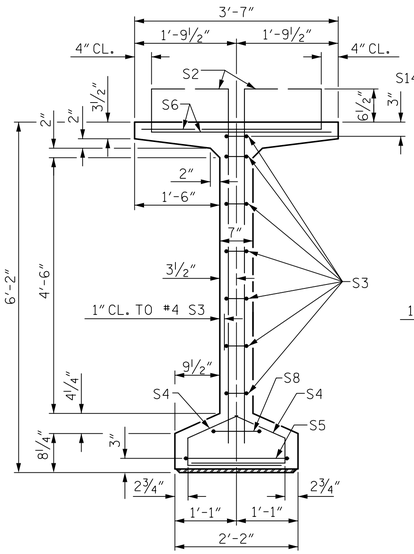


SECTION A-A

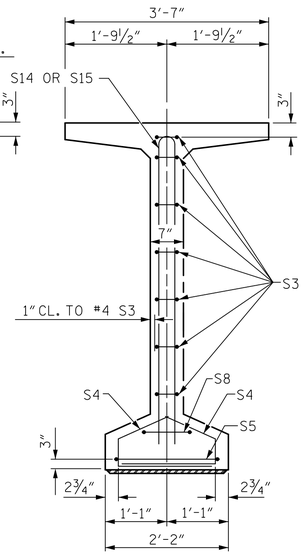


SECTION B-B

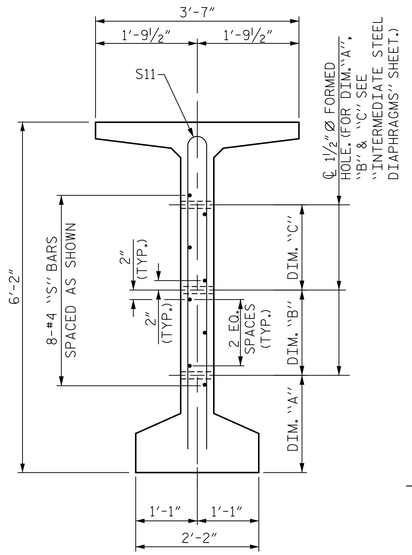


SECTION C-C

(S1, S6 AND S9 BARS NOT SHOWN)

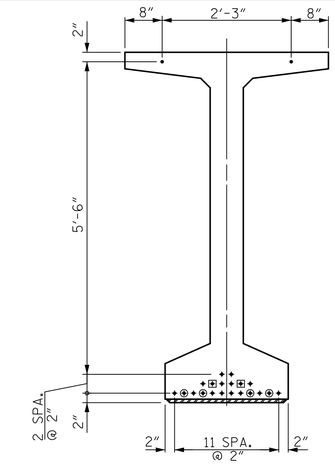


0.6" Ø LOW RELAXATION STRAND LAYOUT

DEBONDING LEGEND

- ● FULLY BONDED STRANDS
- ▣ STRANDS DEBONDED FOR 4'-0" FROM END OF GIRDER
- ⊙ STRANDS DEBONDED FOR 8'-0" FROM END OF GIRDER

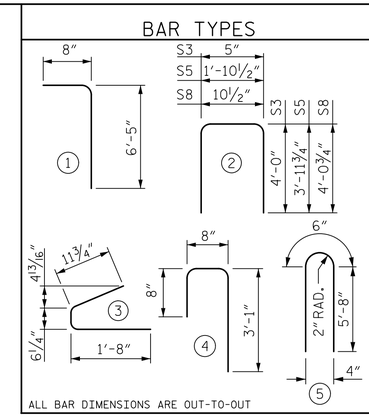


| | BAR | NUMBER | SIZE | TYPE | LENGTH | WEIGHT |
|---|---|---|---|---|---|---|
| | S1 | 126 | #4 | 1 | 7'-1" | 596 |
| | S2 | 12 | #5 | 1 | 7'-1" | 89 |
| | S3 | 14 | #4 | 2 | 8'-5" | 79 |
| | S4 | 84 | #4 | 3 | 3'-2" | 178 |
| | S5 | 2 | #5 | 2 | 9'-10" | 21 |
| | S6 | 138 | #5 | 4 | 4'-5" | 636 |
| | S8 | 2 | #5 | 2 | 9'-0" | 19 |
| | S9 | 27 | #5 | STR | 3'-3" | 92 |
| GA1, GA4 | S11 | 4 | #5 | 5 | 11'-10" | 49 |
| GA2, GA3 | S11 | 8 | #5 | 5 | 11'-10" | 99 |
| GA1, GA4 | S12 | 8 | #4 | STR | 8'-0" | 43 |
| GA2, GA3 | S13 | 8 | #4 | STR | 21'-10" | 117 |
| | S14 | 6 | #5 | 5 | 11'-10" | 74 |
| | S15 | 3 | #4 | 5 | 11'-10" | 24 |

0.6" Ø L. R. GRADE 270 STRANDS

| AREA (SQUARE INCHES) | ULTIMATE STRENGTH (LBS. PER STRAND) | APPLIED PRESTRESS (LBS. PER STRAND) |
|---|---|---|
| 0.217 | 58,600 | 43,950 |

REINFORCING STEEL FOR ONE GDR

QUANTITIES FOR ONE GIRDER

| | REINFORCING STEEL | 5,000 PSI CONCRETE | 0.6" Ø L.R. STRANDS |
|---|---|---|---|
| | LB. | C.Y. | No. |
| GA1 | 1,900 | 16.7 | 22 |
| GA2 | 2,024 | 16.7 | 22 |
| GA3 | 2,024 | 16.7 | 22 |
| GA4 | 1,900 | 16.7 | 22 |

GIRDERS REQUIRED

| NUMBER | LENGTH | TOTAL LENGTH |
|---|---|---|
| 4 | 73'-5½" | 293.83' |

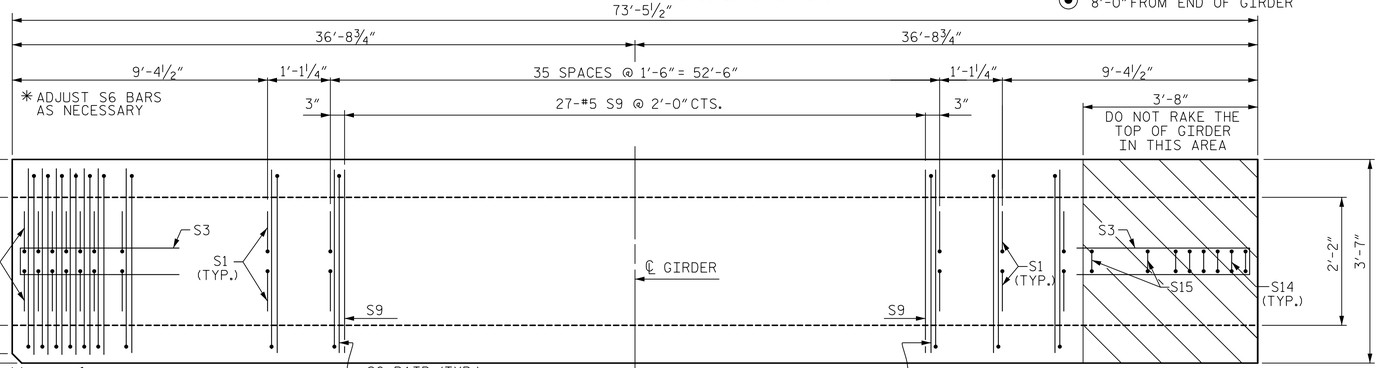


PLAN OF GIRDER

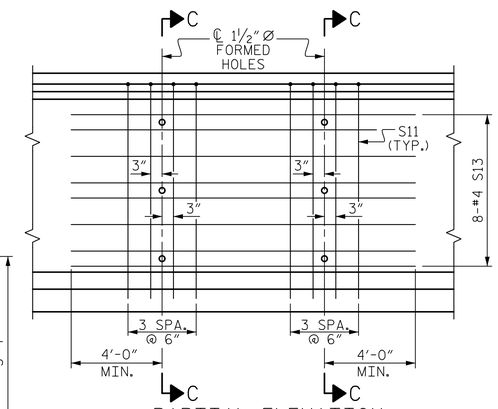


PARTIAL ELEVATION

SHOWING INTERMEDIATE STEEL DIAPHRAGM REINFORCING STEEL FOR GIRDER Nos. GA2 & GA3

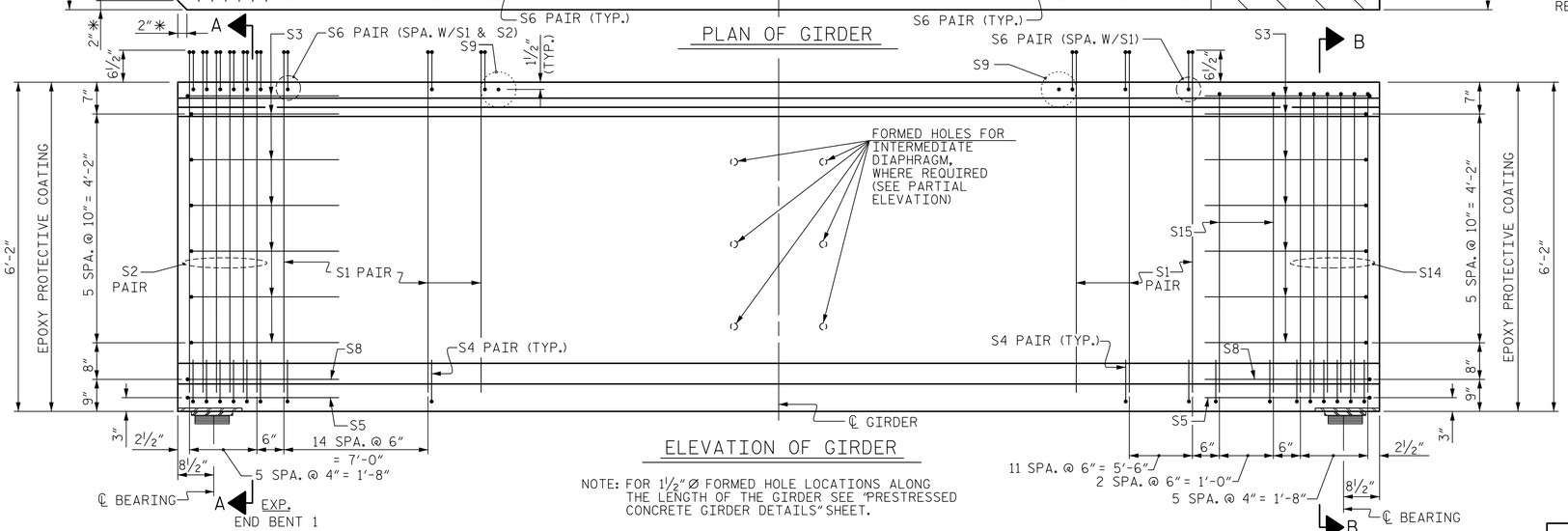


ELEVATION OF GIRDER

NOTE: FOR 1½" Ø FORMED HOLE LOCATIONS ALONG THE LENGTH OF THE GIRDER SEE "PRESTRESSED CONCRETE GIRDER DETAILS" SHEET.

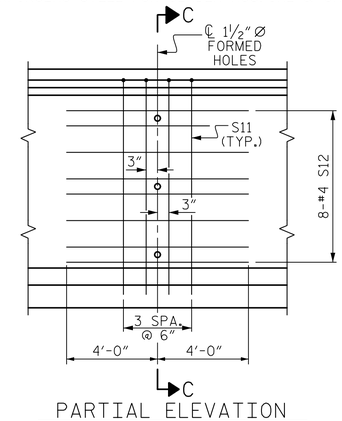


PARTIAL ELEVATION

SHOWING INTERMEDIATE STEEL DIAPHRAGM REINFORCING STEEL FOR GIRDER Nos. GA1 & GA4

NOTES:

THE TRANSFER OF LOAD FROM THE ANCHORAGES TO THE GIRDER SHALL BE DONE WHEN CONCRETE HAS REACHED A COMPRESSIVE STRENGTH OF NOT LESS THAN 4,000 PSI FOR SPAN A GIRDERS.

GIRDER CONCRETE SHALL HAVE A MINIMUM COMPRESSIVE STRENGTH OF 5,000 PSI AT THE AGE OF 28 DAYS.

DocuSigned by: P. Gregg

NORTH CAROLINA PROFESSIONAL SEAL 046632 ENGINEER JAMES P. GREGG

12/6/2018

PROJECT NO. R-1015

CRAVEN COUNTY

STATION: POC STA. 138+31.09 -L-

SHEET 1 OF 6

STATE OF NORTH CAROLINA
DEPARTMENT OF TRANSPORTATION
RALEIGH

74" PRESTRESSED CONCRETE MODIFIED BULB TEE SPAN A

RIGHT LANE

HNTB NORTH CAROLINA, P.C.
NC License No. C-1554
343 E. Six Forks Rd., Suite 200, Raleigh, N.C. 27609

DRAWN BY A. SMITH DATE 7/18
CHECKED BY E. JOWZA DATE 9/18
DESIGN ENGINEER OF RECORD J. GREGG DATE 10/18

DWG. NO. 13

REVISIONS

| NO. | BY | DATE | NO. | BY | DATE |
|---|---|---|---|---|---|
| 1 | | | 3 | | |
| 2 | | | 4 | | |

SHEET NO. S04-13

TOTAL SHEETS 46

DOCUMENT NOT CONSIDERED FINAL UNLESS ALL SIGNATURES COMPLETED

DocuSign Envelope ID: 88A0B777-7A2E-445F-ADAD-2E515F175E6D

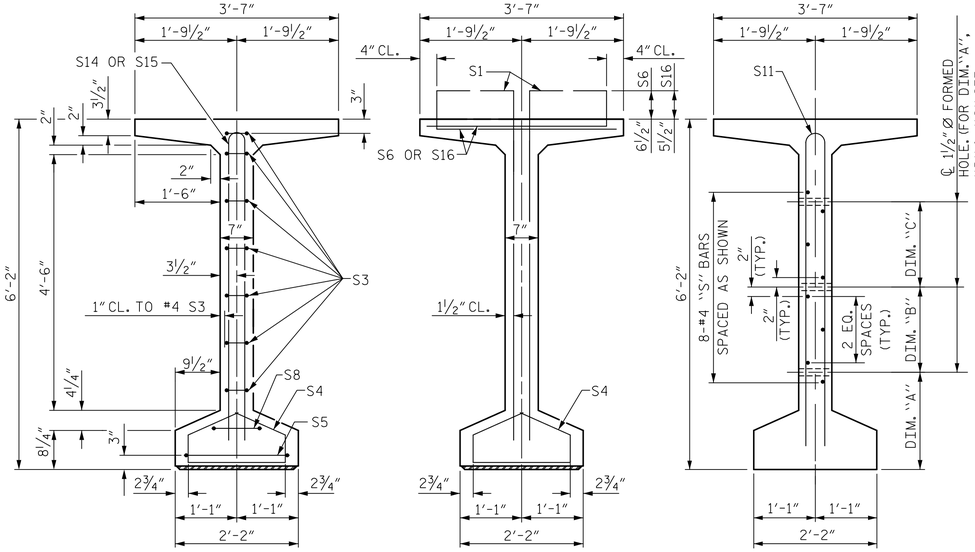


SECTION A-A

SECTION B-B

SECTION C-C

(S1, S6 AND S9 BARS NOT SHOWN)

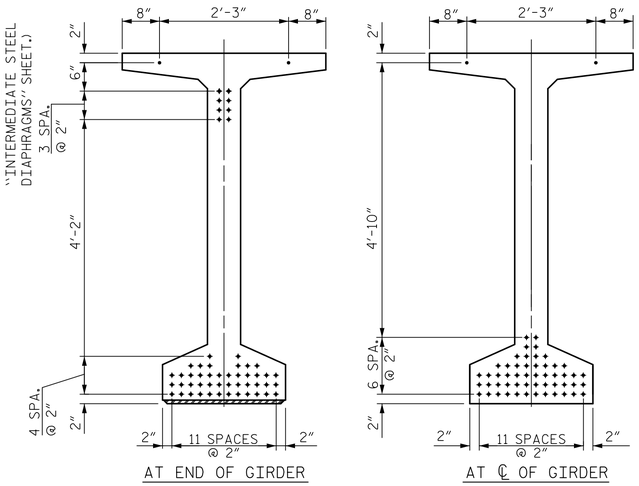


AT END OF GIRDER

AT ℄ OF GIRDER

## 0.6" Ø LOW RELAXATION STRAND LAYOUT

NOTE: ALL STRANDS ARE BONDED FULL LENGTH.

## BAR TYPES

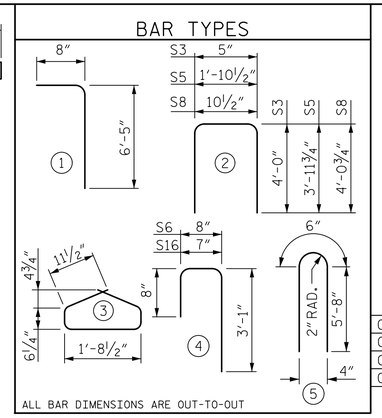


ALL BAR DIMENSIONS ARE OUT-TO-OUT

## 0.6" Ø L. R. GRADE 270 STRANDS

| AREA (SQUARE INCHES) | ULTIMATE STRENGTH (LBS. PER STRAND) | APPLIED PRESTRESS (LBS. PER STRAND) |
|---|---|---|
| 0.217 | 58,600 | 43,950 |

## REINFORCING STEEL FOR ONE GDR

| BAR | NUMBER | SIZE | TYPE | LENGTH | WEIGHT |
|---|---|---|---|---|---|
| S1 | 188 | #4 | 1 | 7'-1" | 890 |
| S3 | 14 | #4 | 2 | 8'-5" | 79 |
| S4 | 48 | #4 | 3 | 4'-8" | 150 |
| S5 | 2 | #5 | 2 | 9'-10" | 21 |
| S6 | 82 | #5 | 4 | 4'-5" | 378 |
| S8 | 2 | #5 | 2 | 9'-0" | 19 |
| S9 | 56 | #5 | STR | 3'-3" | 190 |
| S11 | 8 | #5 | 5 | 11'-10" | 99 |
| S11 | 16 | #5 | 5 | 11'-10" | 197 |
| S12 | 16 | #4 | STR | 8'-0" | 86 |
| S13 | 16 | #4 | STR | 22'-2" | 237 |
| S14 | 18 | #6 | 5 | 11'-10" | 320 |
| S15 | 18 | #4 | 5 | 11'-10" | 142 |
| S16 | 106 | #5 | 4 | 4'-4" | 479 |

## QUANTITIES FOR ONE GIRDER

| | REINFORCING STEEL LB. | 10,000 PSI CONCRETE C.Y. | 0.6" Ø L.R. STRANDS No. |
|---|---|---|---|
| GB1 | 2,853 | 30.0 | 54 |
| GB2 | 3,102 | 30.0 | 54 |
| GB3 | 3,102 | 30.0 | 54 |
| GB4 | 2,853 | 30.0 | 54 |

## GIRDERS REQUIRED

| NUMBER | LENGTH | TOTAL LENGTH |
|---|---|---|
| 4 | 131'-7⅝" | 526.54 |

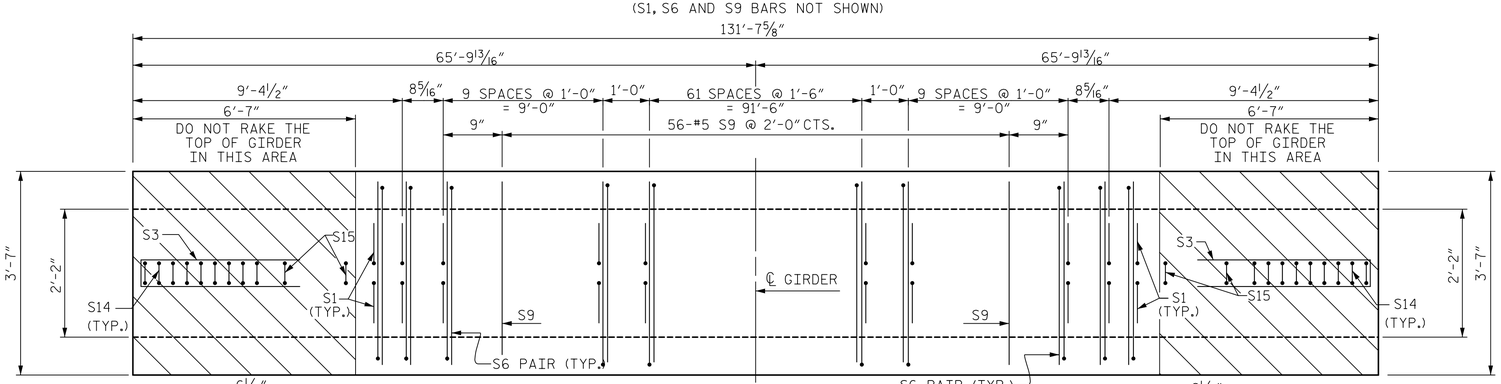


PLAN OF GIRDER

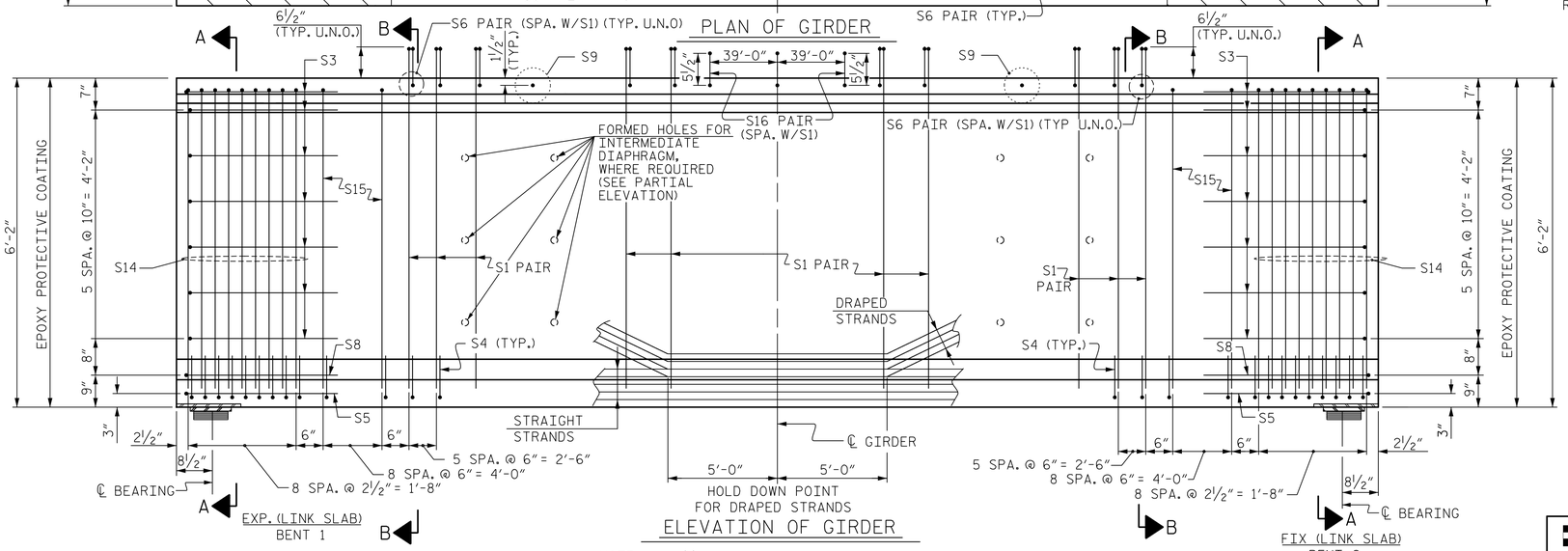


ELEVATION OF GIRDER

NOTE: FOR 1½" Ø FORMED HOLE LOCATIONS ALONG THE LENGTH OF THE GIRDER SEE "PRESTRESSED CONCRETE GIRDER DETAILS" SHEET.

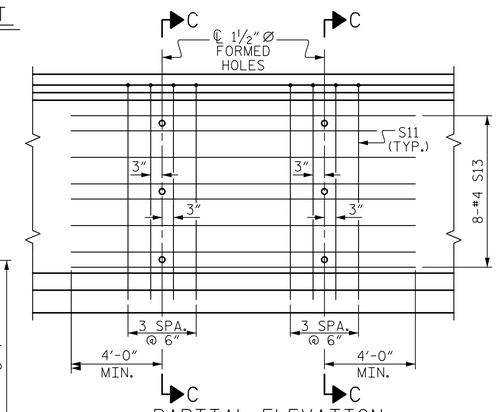


PARTIAL ELEVATION

SHOWING INTERMEDIATE STEEL DIAPHRAGM REINFORCING STEEL FOR GIRDER Nos. GB2 & GB3

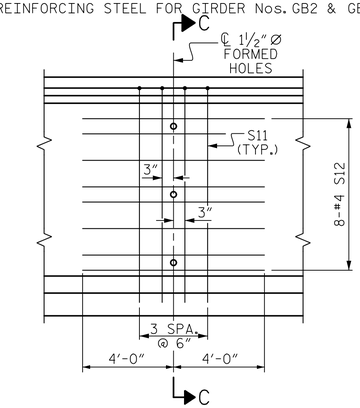


PARTIAL ELEVATION

SHOWING INTERMEDIATE STEEL DIAPHRAGM REINFORCING STEEL FOR GIRDER Nos. GB1 & GB4

NOTES:

THE TRANSFER OF LOAD FROM THE ANCHORAGES TO THE GIRDER SHALL BE DONE WHEN CONCRETE HAS REACHED A COMPRESSIVE STRENGTH OF NOT LESS THAN 8,100 PSI FOR SPAN B GIRDERS.

GIRDER CONCRETE SHALL HAVE A MINIMUM COMPRESSIVE STRENGTH OF 10,000 PSI AT THE AGE OF 28 DAYS.

THE UPLIFT FORCE DUE TO DRAPED STRANDS IS 25 KIPS.

DocuSigned by: P. Gregg

NORTH CAROLINA PROFESSIONAL SEAL 046632 ENGINEER JAMES P. GREGG

12/6/2018

PROJECT NO. R-1015

CRAVEN COUNTY

STATION: POC STA. 138+31.09 -L-

SHEET 2 OF 6

STATE OF NORTH CAROLINA
DEPARTMENT OF TRANSPORTATION
RALEIGH

74" PRESTRESSED CONCRETE MODIFIED BULB TEE SPAN B

RIGHT LANE

HNTB NORTH CAROLINA, P.C.
NC License No. C-1554
343 E. Six Forks Rd., Suite 200, Raleigh, N.C. 27609

DRAWN BY A. SMITH DATE 7/18
CHECKED BY E. JOWZA DATE 9/18
DESIGN ENGINEER OF RECORD J. GREGG DATE 10/18

DWG. NO. 14

DOCUMENT NOT CONSIDERED FINAL UNLESS ALL SIGNATURES COMPLETED

| REVISIONS | | | | | | SHEET NO. |
|---|---|---|---|---|---|---|
| NO. | BY | DATE | NO. | BY | DATE | S04-14 |
| 1 | | | 3 | | | TOTAL SHEETS |
| 2 | | | 4 | | | 46 |

DocuSign Envelope ID: 88A0B777-7A2E-445F-ADAD-2E515F175E6D

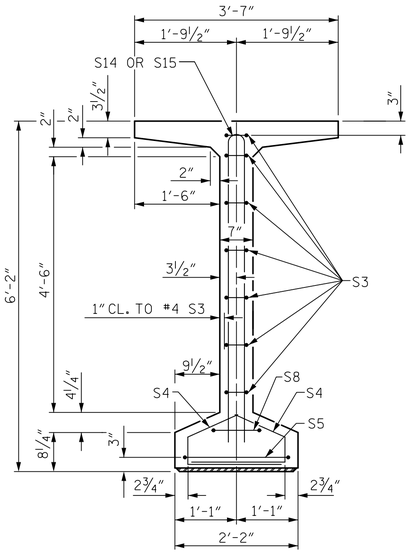


SECTION A-A

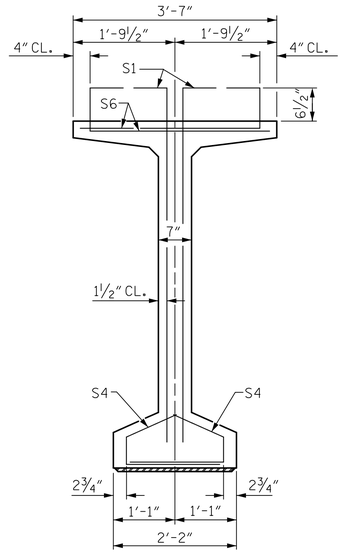


SECTION B-B

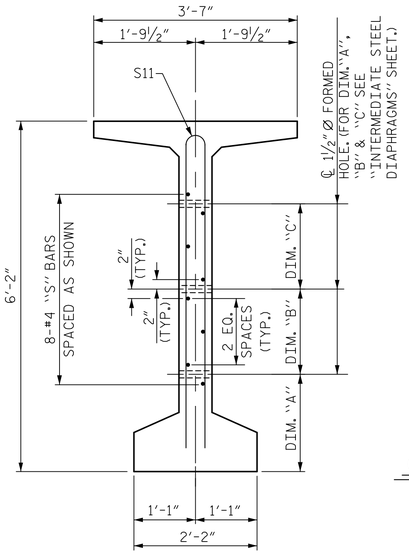


SECTION C-C

(S1, S6 AND S9 BARS NOT SHOWN)

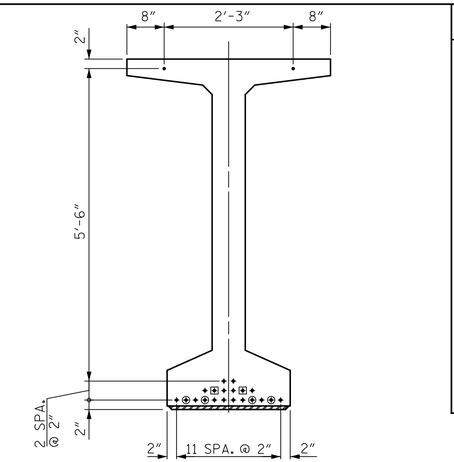


0.6" Ø LOW RELAXATION STRAND LAYOUT

DEBONDING LEGEND

- ● FULLY BONDED STRANDS
- ▣ STRANDS DEBONDED FOR 4'-0" FROM END OF GIRDER
- ⊙ STRANDS DEBONDED FOR 8'-0" FROM END OF GIRDER

## BAR TYPES

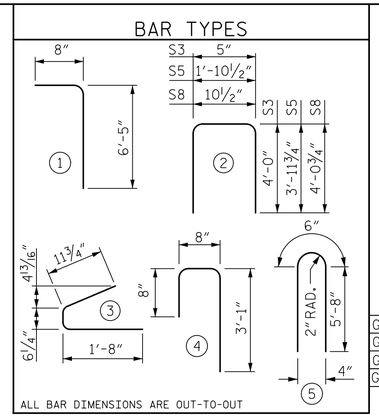


## 0.6" Ø L. R. GRADE 270 STRANDS

| AREA (SQUARE INCHES) | ULTIMATE STRENGTH (LBS. PER STRAND) | APPLIED PRESTRESS (LBS. PER STRAND) |
|---|---|---|
| 0.217 | 58,600 | 43,950 |

## REINFORCING STEEL FOR ONE GDR

| BAR | NUMBER | SIZE | TYPE | LENGTH | WEIGHT | |
|---|---|---|---|---|---|---|
| S1 | 152 | #4 | 1 | 7'-1" | 719 | |
| S3 | 14 | #4 | 2 | 8'-5" | 79 | |
| S4 | 84 | #4 | 3 | 3'-2" | 178 | |
| S5 | 2 | #5 | 2 | 9'-10" | 21 | |
| S6 | 152 | #5 | 4 | 4'-5" | 700 | |
| S8 | 2 | #5 | 2 | 9'-0" | 19 | |
| S9 | 32 | #5 | STR | 3'-3" | 108 | |
| S11 | 4 | #5 | 5 | 11'-10" | 49 | GC1, GC4 |
| S11 | 8 | #5 | 5 | 11'-10" | 99 | GC2, GC3 |
| S12 | 8 | #4 | STR | 8'-0" | 43 | GC1, GC4 |
| S13 | 8 | #4 | STR | 22'-7" | 121 | GC2, GC3 |
| S14 | 12 | #5 | 5 | 11'-10" | 148 | |
| S15 | 8 | #4 | 5 | 11'-10" | 63 | |

## QUANTITIES FOR ONE GIRDER

| | REINFORCING STEEL | 5,000 PSI CONCRETE | 0.6" Ø L.R. STRANDS |
|---|---|---|---|
| | LB. | C.Y. | No. |
| GC1 | 2,127 | 18.9 | 22 |
| GC2 | 2,255 | 18.9 | 22 |
| GC3 | 2,255 | 18.9 | 22 |
| GC4 | 2,127 | 18.9 | 22 |

## GIRDERS REQUIRED

| NUMBER | LENGTH | TOTAL LENGTH |
|---|---|---|
| 4 | 82'-9⅝" | 331.21' |

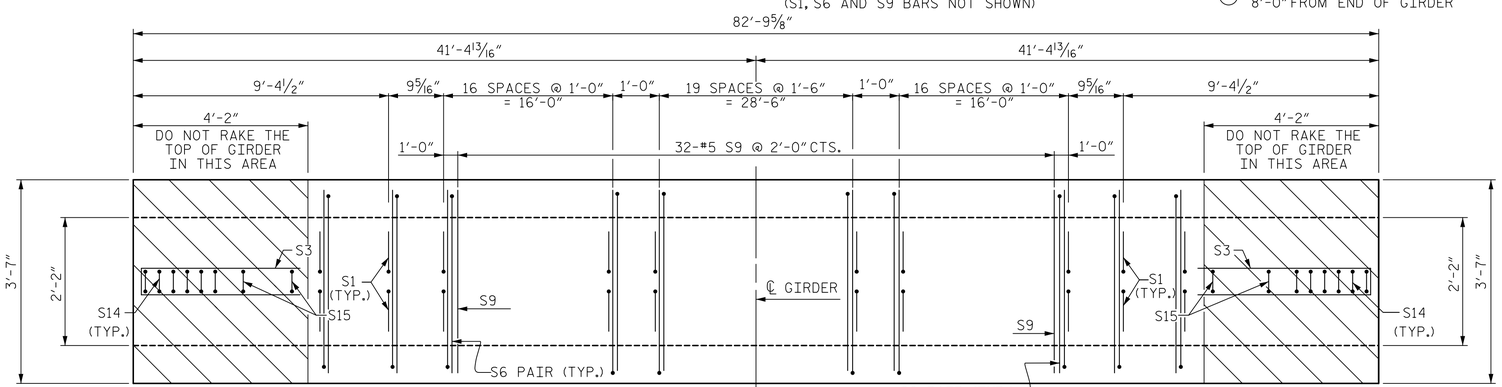


PLAN OF GIRDER

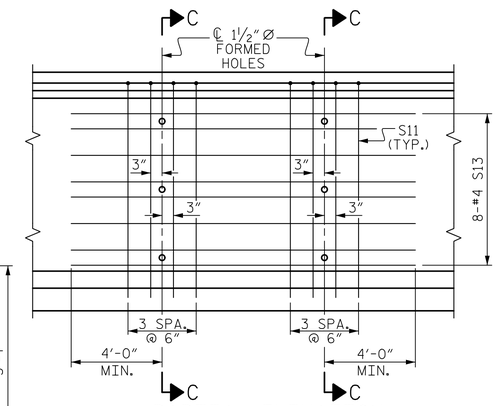


PARTIAL ELEVATION

SHOWING INTERMEDIATE STEEL DIAPHRAGM REINFORCING STEEL FOR GIRDER Nos. GC2 & GC3

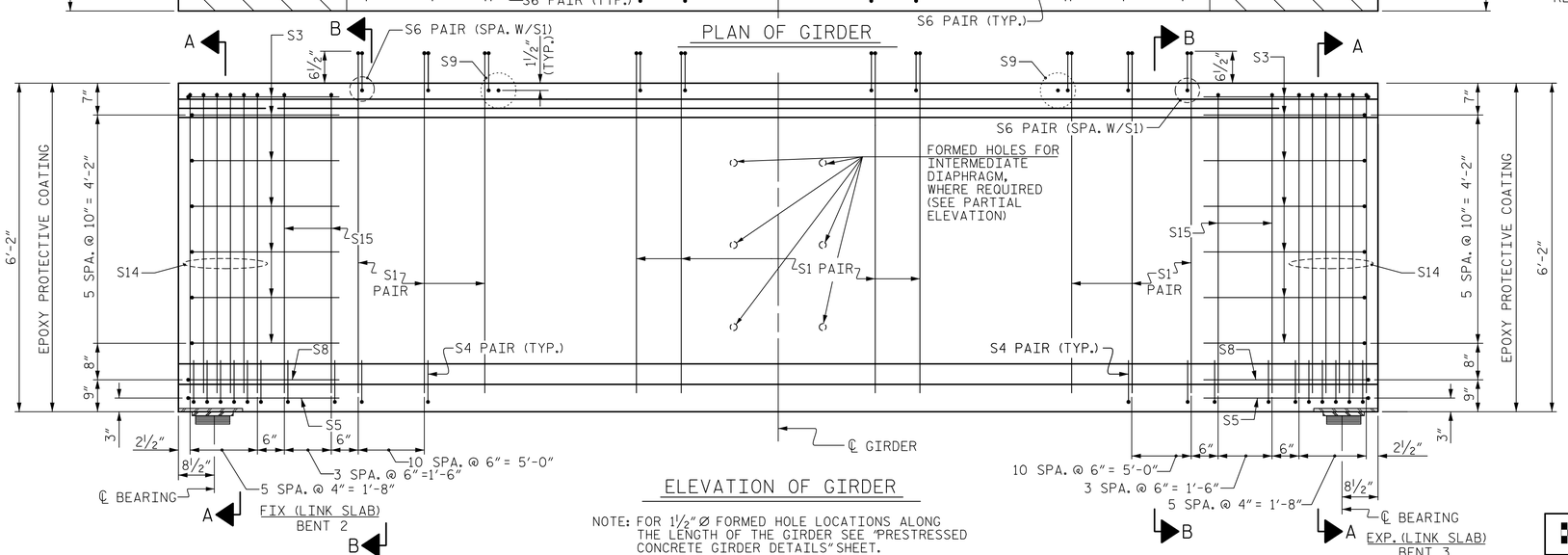


ELEVATION OF GIRDER

NOTE: FOR 1½" Ø FORMED HOLE LOCATIONS ALONG THE LENGTH OF THE GIRDER SEE "PRESTRESSED CONCRETE GIRDER DETAILS" SHEET.

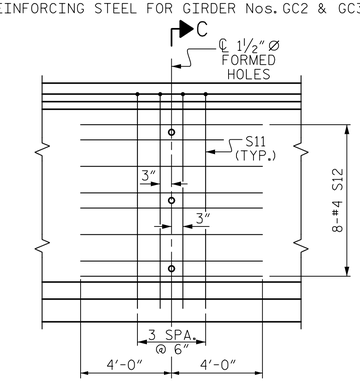


PARTIAL ELEVATION

SHOWING INTERMEDIATE STEEL DIAPHRAGM REINFORCING STEEL FOR GIRDER Nos. GC1 & GC4

NOTES:

THE TRANSFER OF LOAD FROM THE ANCHORAGES TO THE GIRDER SHALL BE DONE WHEN CONCRETE HAS REACHED A COMPRESSIVE STRENGTH OF NOT LESS THAN 4,000 PSI FOR SPAN C GIRDERS.

GIRDER CONCRETE SHALL HAVE A MINIMUM COMPRESSIVE STRENGTH OF 5,000 PSI AT THE AGE OF 28 DAYS.

DocuSigned by: P. 61-08 — NORTH CAROLINA PROFESSIONAL SEAL 046632 ENGINEER JAMES P. GREGG

12/6/2018

PROJECT NO. R-1015

CRAVEN COUNTY

STATION: POC STA. 138+31.09 -L-

SHEET 3 OF 6

STATE OF NORTH CAROLINA
DEPARTMENT OF TRANSPORTATION
RALEIGH

74" PRESTRESSED CONCRETE MODIFIED BULB TEE SPAN C

RIGHT LANE

HNTB NORTH CAROLINA, P.C.
NC License No. C-1554
343 E. Six Forks Rd., Suite 200, Raleigh, N.C. 27609

DRAWN BY A. SMITH DATE 7/18
CHECKED BY E. JOWZA DATE 9/18
DESIGN ENGINEER OF RECORD J. GREGG DATE 10/18

DWG. NO. 15

| REVISIONS | | | | | | SHEET NO. |
|---|---|---|---|---|---|---|
| NO. | BY | DATE | NO. | BY | DATE | S04-15 |
| 1 | | | 3 | | | TOTAL SHEETS |
| 2 | | | 4 | | | 46 |

DOCUMENT NOT CONSIDERED FINAL UNLESS ALL SIGNATURES COMPLETED

DocuSign Envelope ID: 88A0B777-7A2E-445F-ADAD-2E515F175E6D

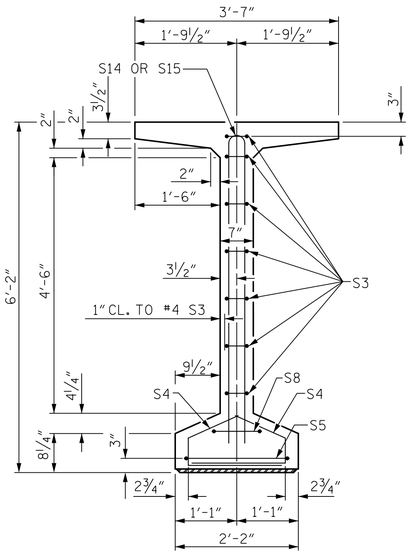


SECTION A-A

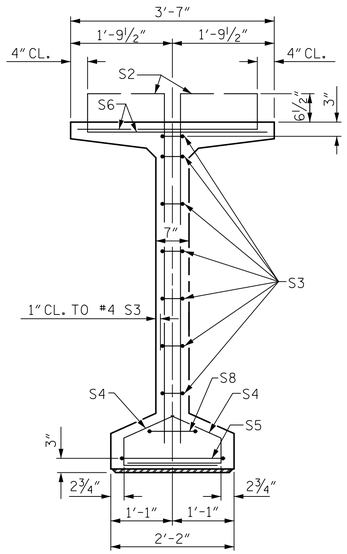


SECTION B-B

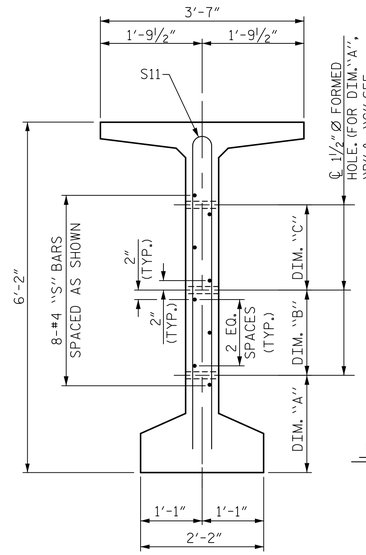


SECTION C-C

(S1, S6 AND S9 BARS NOT SHOWN)

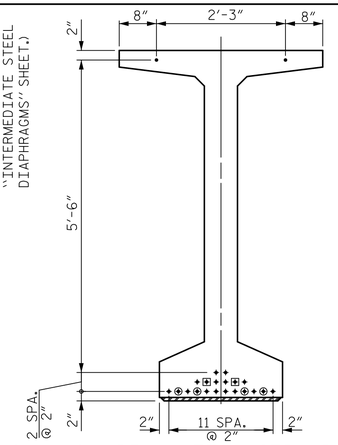


0.6" Ø LOW RELAXATION STRAND LAYOUT

DEBONDING LEGEND

- ● FULLY BONDED STRANDS
- ▣ STRANDS DEBONDED FOR 4'-0" FROM END OF GIRDER
- ⊙ STRANDS DEBONDED FOR 8'-0" FROM END OF GIRDER

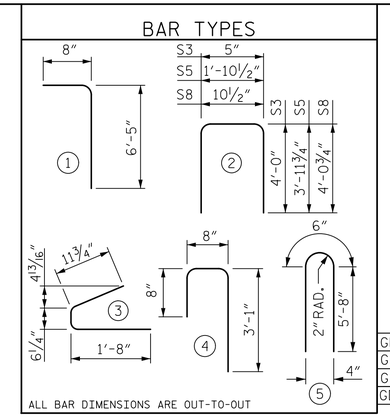


## 0.6" Ø L. R. GRADE 270 STRANDS

| AREA (SQUARE INCHES) | ULTIMATE STRENGTH (LBS. PER STRAND) | APPLIED PRESTRESS (LBS. PER STRAND) |
|---|---|---|
| 0.217 | 58,600 | 43,950 |

## REINFORCING STEEL FOR ONE GDR

| BAR | NUMBER | SIZE | TYPE | LENGTH | WEIGHT | |
|---|---|---|---|---|---|---|
| S1 | 120 | #4 | 1 | 7'-1" | 568 | |
| S2 | 12 | #5 | 1 | 7'-1" | 89 | |
| S3 | 14 | #4 | 2 | 8'-5" | 79 | |
| S4 | 84 | #4 | 3 | 3'-2" | 178 | |
| S5 | 2 | #5 | 2 | 9'-10" | 21 | |
| S6 | 132 | #5 | 4 | 4'-5" | 608 | |
| S8 | 2 | #5 | 2 | 9'-0" | 19 | |
| S9 | 24 | #5 | STR | 3'-3" | 81 | |
| S11 | 4 | #5 | 5 | 11'-10" | 49 | GD1, GD4 |
| S11 | 8 | #5 | 5 | 11'-10" | 99 | GD2, GD3 |
| S12 | 8 | #4 | STR | 8'-0" | 43 | GD1, GD4 |
| S13 | 8 | #4 | STR | 22'-10" | 122 | GD2, GD3 |
| S14 | 6 | #5 | 5 | 11'-10" | 74 | |
| S15 | 3 | #4 | 5 | 11'-10" | 24 | |

## QUANTITIES FOR ONE GIRDER

| | REINFORCING STEEL | 5,000 PSI CONCRETE | 0.6" Ø L.R. STRANDS |
|---|---|---|---|
| | LB. | C.Y. | No. |
| GD1 | 1,833 | 15.8 | 22 |
| GD2 | 1,962 | 15.8 | 22 |
| GD3 | 1,962 | 15.8 | 22 |
| GD4 | 1,833 | 15.8 | 22 |

## GIRDERS REQUIRED

| NUMBER | LENGTH | TOTAL LENGTH |
|---|---|---|
| 4 | 69'-6⅝" | 278.21' |

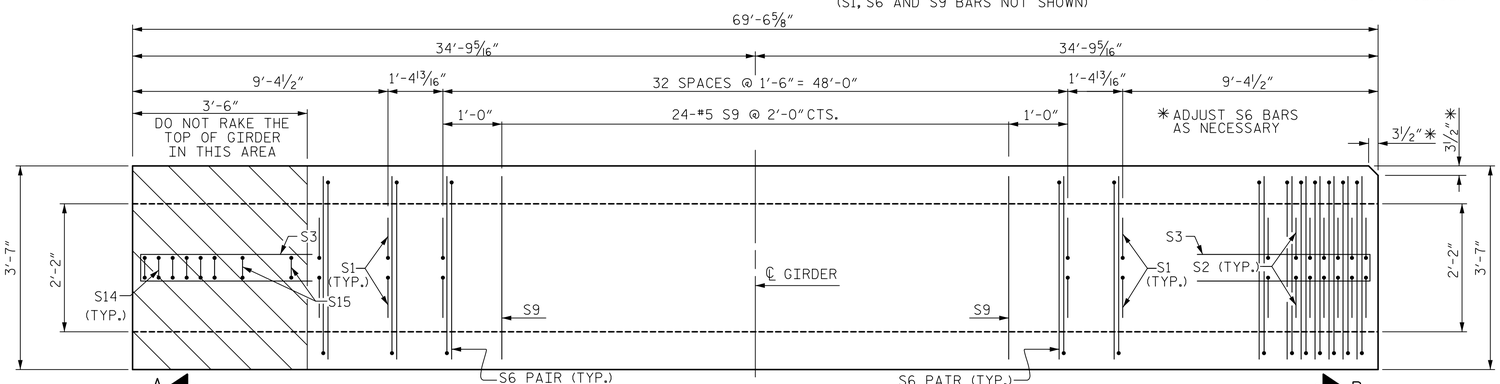


PLAN OF GIRDER

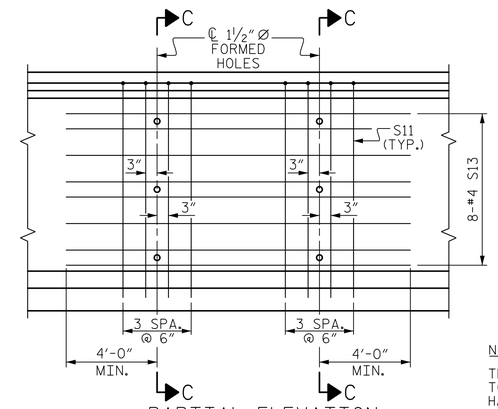


PARTIAL ELEVATION

SHOWING INTERMEDIATE STEEL DIAPHRAGM REINFORCING STEEL FOR GIRDER Nos. GD2 & GD3

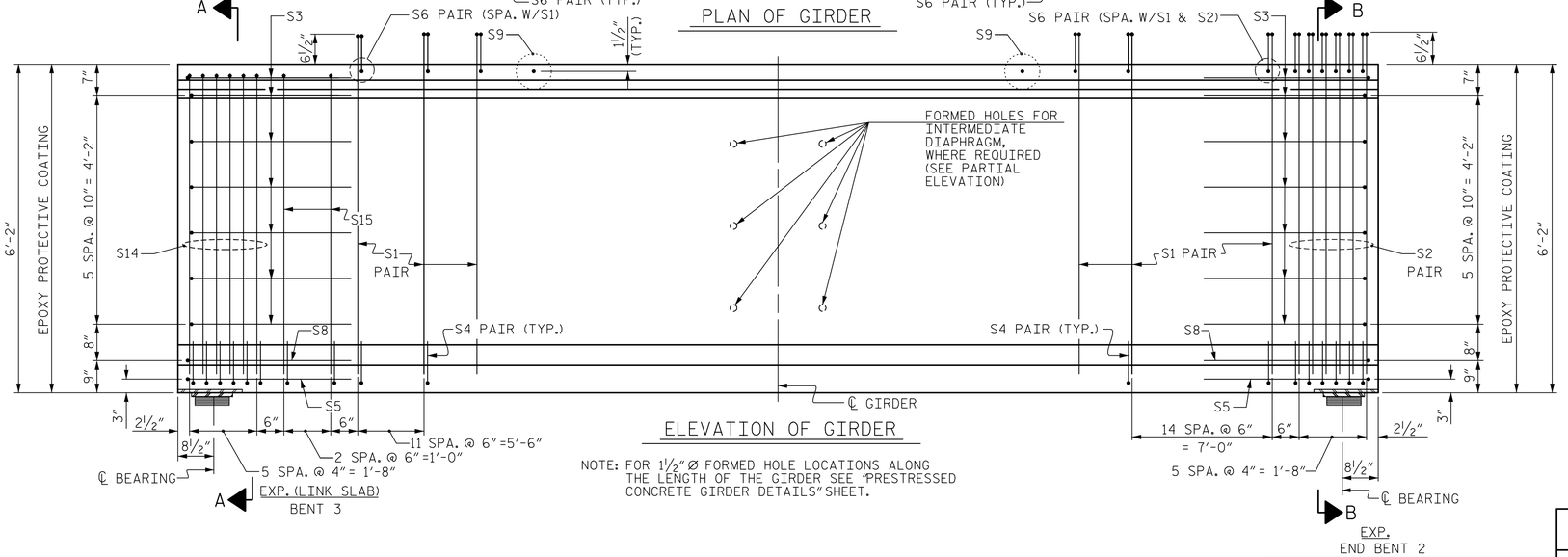


ELEVATION OF GIRDER

NOTE: FOR 1½" Ø FORMED HOLE LOCATIONS ALONG THE LENGTH OF THE GIRDER SEE "PRESTRESSED CONCRETE GIRDER DETAILS" SHEET.

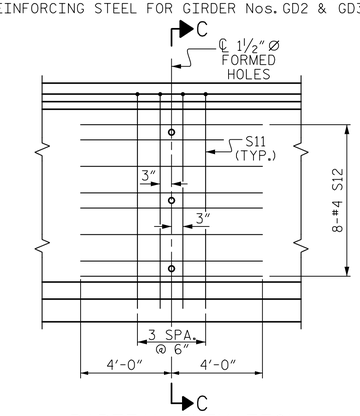


PARTIAL ELEVATION

SHOWING INTERMEDIATE STEEL DIAPHRAGM REINFORCING STEEL FOR GIRDER Nos. GD1 & GD4

NOTES:

THE TRANSFER OF LOAD FROM THE ANCHORAGES TO THE GIRDER SHALL BE DONE WHEN CONCRETE HAS REACHED A COMPRESSIVE STRENGTH OF NOT LESS THAN 4,000 PSI FOR SPAN D GIRDERS.

GIRDER CONCRETE SHALL HAVE A MINIMUM COMPRESSIVE STRENGTH OF 5,000 PSI AT THE AGE OF 28 DAYS.

NORTH CAROLINA PROFESSIONAL SEAL 046632 ENGINEER JAMES P. GREGG

12/6/2018

PROJECT NO. R-1015

CRAVEN COUNTY

STATION: POC STA. 138+31.09 -L-

SHEET 4 OF 6

STATE OF NORTH CAROLINA
DEPARTMENT OF TRANSPORTATION
RALEIGH

74" PRESTRESSED CONCRETE MODIFIED BULB TEE SPAN D

RIGHT LANE

HNTB NORTH CAROLINA, P.C.
NC License No. C-1554
343 E. Six Forks Rd., Suite 200, Raleigh, N.C. 27609

DRAWN BY A. SMITH DATE 7/18
CHECKED BY E. JOWZA DATE 9/18
DESIGN ENGINEER OF RECORD J. GREGG DATE 10/18

DWG. NO. 16

| REVISIONS | | | | | | |
|---|---|---|---|---|---|---|
| NO. | BY | DATE | NO. | BY | DATE | |
| 1 | | | 3 | | | |
| 2 | | | 4 | | | |

SHEET NO. S04-16

TOTAL SHEETS 46

**DOCUMENT NOT CONSIDERED FINAL UNLESS ALL SIGNATURES COMPLETED**

DocuSign Envelope ID: 11A1261F-14B1-49AE-A388-908A64E11071

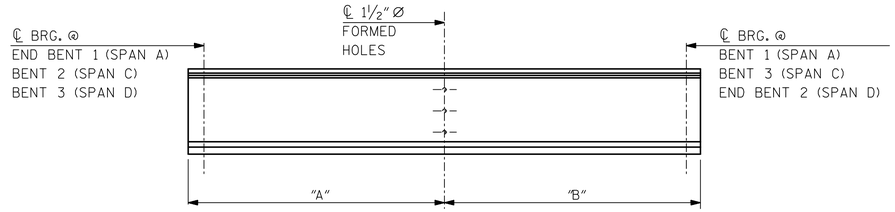


| DIM. | GA1 | GA4 | GC1 | GC4 | GD1 | GD4 |
|---|---|---|---|---|---|---|
| "A" | 43'-7¾" | 29'-9¾" | 48'-7⅞" | 34'-1¾" | 42'-2¼" | 27'-4⅜" |
| "B" | 29'-9¾" | 43'-7¾" | 34'-1¾" | 48'-7⅞" | 27'-4⅜" | 42'-2¼" |

GIRDER ELEVATION

GA1 & GA4
GC1 & GC4
GD1 & GD4

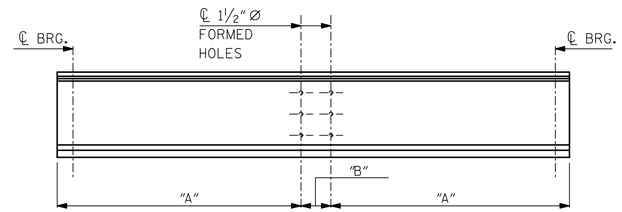


| DIM. | GA2 & GA3 | GC2 & GC3 | GD2 & GD3 |
|---|---|---|---|
| "A" | 29'-9¾" | 34'-1¾" | 27'-4⅜" |
| "B" | 13'-10" | 14'-6⅛" | 14'-9⅞" |

GIRDER ELEVATION

GA2 & GA3
GC2 & GC3
GD2 & GD3

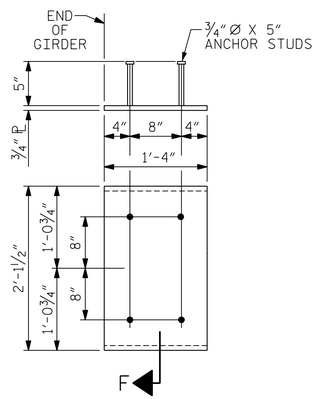


EMBEDDED PLATE "B-1" DETAILS
FOR 74" MODIFIED BULB TEES

(2 REQ'D PER GIRDER)

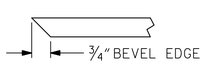


SECTION "F"

(SEE NOTES)

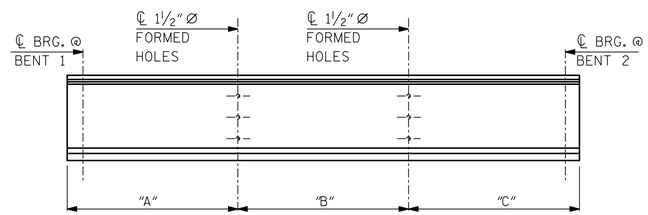


| DIM. | GB1 | GB4 |
|---|---|---|
| "A" | 50'-11½" | 36'-9⅝" |
| "B" | 43'-10½" | 43'-10½" |
| "C" | 36'-9⅝" | 50'-11½" |

GIRDER ELEVATION

GB1 & GB4

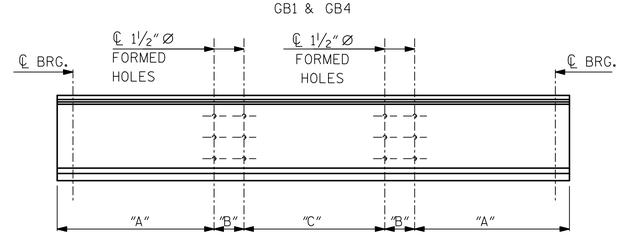


| DIM. | GB2 & GB3 |
|---|---|
| "A" | 36'-9⅝" |
| "B" | 14'-1⅞" |
| "C" | 29'-8⅝" |

GIRDER ELEVATION

GB2 & GB3

1½" Ø FORMED HOLE LOCATIONS

## NOTES

ALL PRESTRESSING STRANDS SHALL BE 7-WIRE LOW-RELAXATION GRADE 270 STRANDS AND SHALL CONFORM TO AASHTO M203 EXCEPT FOR SAMPLING REQUIREMENTS WHICH SHALL BE IN ACCORDANCE WITH THE STANDARD SPECIFICATIONS.

ALL REINFORCING STEEL SHALL BE GRADE 60.

APPLY EPOXY PROTECTIVE COATING TO END OF GIRDER SURFACES INDICATED IN ELEVATION VIEW.

EMBEDDED PLATE "B-1" SHALL BE GALVANIZED IN ACCORDANCE WITH THE STANDARD SPECIFICATIONS.

ANCHOR STUDS SHALL CONFORM TO AASHTO M169 GRADES 1010 THROUGH 1020 OR APPROVED EQUAL, AND SHALL MEET THE TYPE "B" REQUIREMENTS OF SUBSECTION 7.3 OF THE ANSI/AASHTO/AWS D1.5 BRIDGE WELDING CODE.

PRESTRESSING STRANDS SHALL BE CUT FLUSH WITH THE GIRDER ENDS.

DEPENDING ON THE TYPE OF SYSTEM USED TO SUPPORT THE DECK SLAB FORMS, PRESET ANCHORS MAY BE NECESSARY IN THE PRESTRESSED CONCRETE GIRDER.

THE TOP SURFACE OF THE GIRDER, EXCLUDING THE OUTSIDE 4", SHALL BE RAKED TO A DEPTH OF ¼".

WHEN DRAPED STRANDS ARE DETAILED, THE LONGITUDINAL LOCATION OF THE HOLD DOWN DEVICES SHALL BE WITHIN 6" OF THE LOCATION SHOWN AND THE CENTER OF GRAVITY OF THE GROUP OF DRAPED STRANDS SHALL BE LOCATED WITHIN ½" OF THE THEORETICAL LOCATION SHOWN.

A 2" x 2" CHAMFER IS ALLOWED AT THE INTERSECTION OF THE WEB AND THE BOTTOM FLANGE.

THE CONTRACTOR HAS THE OPTION TO PROVIDE, AT NO ADDITIONAL COST TO THE DEPARTMENT, 2 ADDITIONAL STRANDS AT THE TOP OF THE GIRDER TO FACILITATE TYING OF THE REINFORCING STEEL. THESE STRANDS SHALL BE PULLED TO A LOAD OF 4500 lbs.

PROJECT NO. R-1015

CRAVEN COUNTY

STATION: POC STA. 138+31.09 -L-

SHEET 5 OF 6

DocuSigned by: James P. Gregg
DB0BFE024AB9C404...

NORTH CAROLINA PROFESSIONAL SEAL 046632 ENGINEER JAMES P. GREGG

11/20/2018

DOCUMENT NOT CONSIDERED FINAL UNLESS ALL SIGNATURES COMPLETED

HNTB

HNTB NORTH CAROLINA, P.C.
NC License No. C-1554
343 E. Six Forks Rd., Suite 200, Raleigh, N.C. 27609

DRAWN BY A. SMITH DATE 7/18
CHECKED BY E. JOWZA DATE 9/18
DESIGN ENGINEER OF RECORD J. GREGG DATE 10/18

DWG. NO. 17

STATE OF NORTH CAROLINA
DEPARTMENT OF TRANSPORTATION
RALEIGH

PRESTRESSED CONCRETE GIRDER DETAILS

RIGHT LANE

| REVISIONS | | | | | | SHEET NO. |
|---|---|---|---|---|---|---|
| NO. | BY | DATE | NO. | BY | DATE | S04-17 |
| 1 | | | 3 | | | TOTAL SHEETS |
| 2 | | | 4 | | | 46 |

DocuSign Envelope ID: 11A1261F-14B1-49AE-A388-908A64E11071

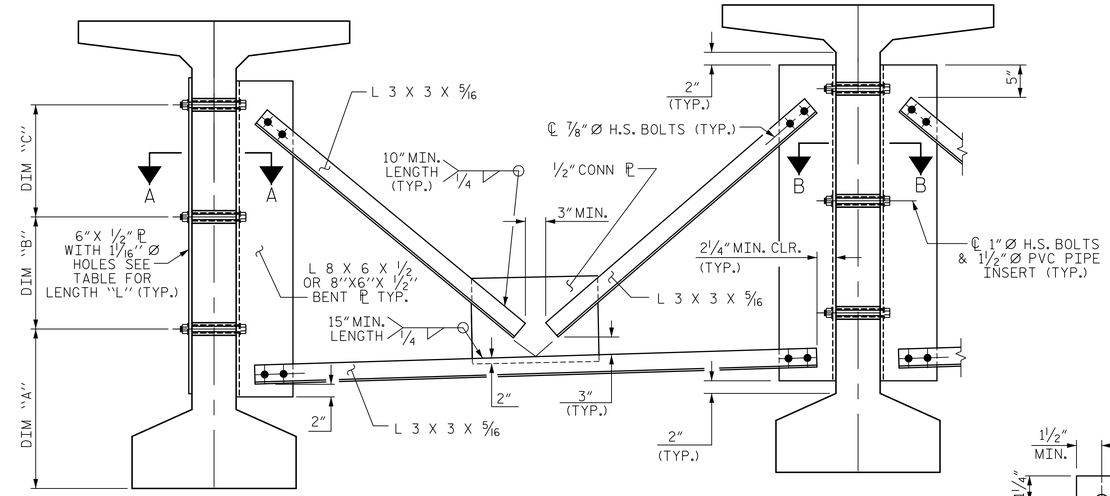


EXTERIOR GIRDER

INTERIOR GIRDER

## PART SECTION AT INTERMEDIATE DIAPHRAGM

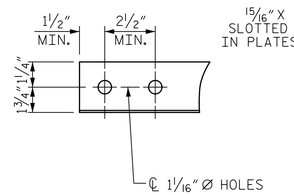


ANGLE END

(L 3 X 3 X 5/16)

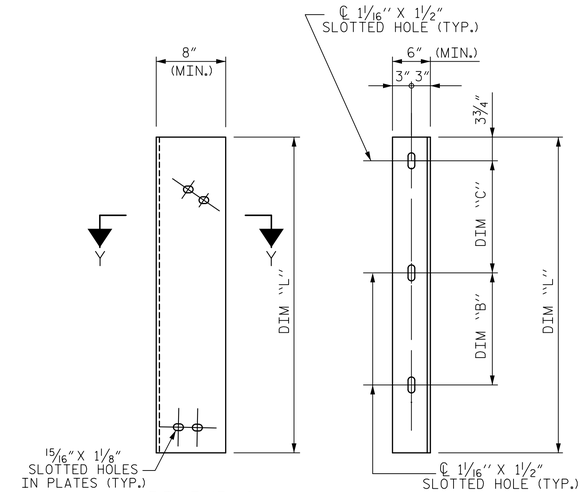


DIAPHRAGM FACE

WEB FACE

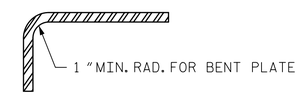


SECTION Y-Y

## CONNECTOR PLATE DETAIL

## STRUCTURAL STEEL NOTES

ALL INTERMEDIATE DIAPHRAGM STEEL AND CONNECTOR PLATES SHALL BE AASHTO M270 GRADE 50 OR APPROVED EQUAL.

TENSION ON THE ASTM A325 BOLTS THROUGH THE ANGLE MEMBER SHALL BE CALIBRATED USING DIRECT TENSION INDICATOR WASHERS IN ACCORDANCE WITH THE STANDARD SPECIFICATIONS.

TENSION ON THE ASTM A449 BOLTS THROUGH THE GIRDER WEB SHALL BE SNUG TIGHTENED FOLLOWED BY AN ADDITIONAL 1/4 TURN.

THE PLATES, BENT PLATES, AND ANGLES SHALL BE METALLIZED IN ACCORDANCE WITH THE STANDARD SPECIFICATIONS. FOR THERMAL SPRAYED COATINGS (METALLIZATION), SEE SPECIAL PROVISIONS.

FOR METALLIZATION, APPLY A THERMAL SPRAYED COATING WITH A SEAL COAT TO ALL STEEL DIAPHRAGM SURFACES IN ACCORDANCE WITH THE DEPARTMENTS THERMAL SPRAYED COATINGS (METALLIZATION) PROGRAM, THERMAL SPRAYED COATINGS SPECIAL PROVISION AND SECTION 442 OF THE STANDARD SPECIFICATIONS.

GALVANIZE THE HIGH STRENGTH BOLTS, NUTS, WASHERS AND DIRECT TENSION INDICATORS IN ACCORDANCE WITH THE STANDARD SPECIFICATIONS.

USE AN ASTM F436 HARDENED WASHER WITH STANDARD AND SLOTTED HOLES UNDER EACH BOLT HEAD AND NUT.

FOR BOLTS THROUGH THE GIRDER WEB, PROVIDE SUFFICIENT LENGTH OF THREADS ON ALL BOLTS TO ACCOMMODATE WASHERS AND THE THICKNESS OF CONNECTING MEMBER PLUS AT LEAST 1/4" PROJECTION BEYOND THE NUT.

INTERMEDIATE DIAPHRAGM ASSEMBLY SHALL COMPLY WITH SECTION 1072 OF THE STANDARD SPECIFICATIONS.

SUBMIT TWO SETS OF WORKING DRAWINGS FOR THE INTERMEDIATE DIAPHRAGM ASSEMBLY FOR REVIEW, COMMENTS AND ACCEPTANCE. AFTER REVIEW, COMMENTS, AND ACCEPTANCE, SUBMIT SEVEN SETS FOR DISTRIBUTION.

IN THE EXTERIOR BAYS, PLACE TEMPORARY STRUTS BETWEEN PRESTRESSED GIRDERS ADJACENT TO THE STEEL DIAPHRAGMS. STRUTS SHALL REMAIN IN PLACE 3 DAYS AFTER CONCRETE IS PLACED.

THE COST OF THE STEEL DIAPHRAGMS AND ASSEMBLIES SHALL BE INCLUDED IN THE UNIT PRICE BID FOR PRESTRESSED CONCRETE GIRDERS.

## TABLE

| GIRDER TYPE | DIM "A" | DIM "B" | DIM "C" | DIM "L" |
|---|---|---|---|---|
| 74" BULB TEE | 2'-0 3/4" | 1'-6" | 1'-6" | 4'-2" |

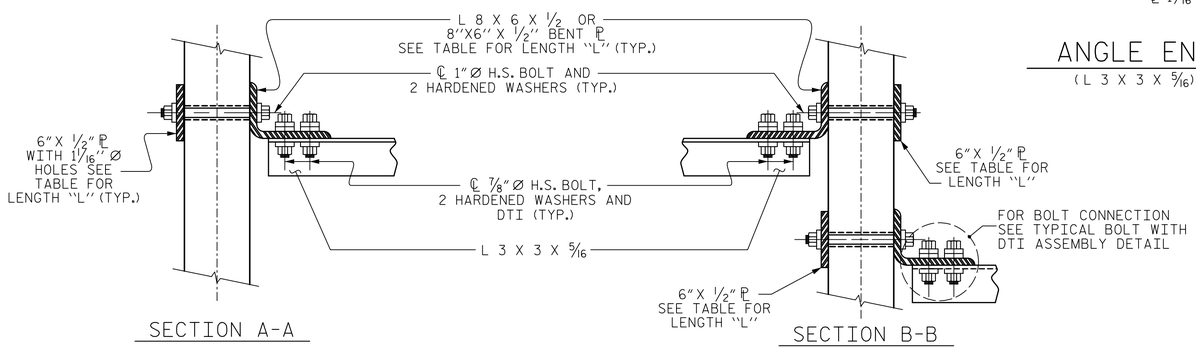


SECTION A-A

SECTION B-B

## CONNECTION DETAILS

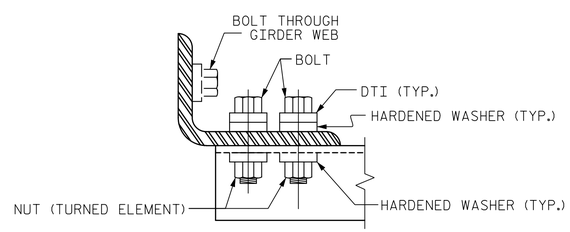


BOLT WITH DTI ASSEMBLY DETAIL

PROJECT NO. R-1015

CRAVEN COUNTY

STATION: POC STA. 138+31.09 -L-

SHEET 6 OF 6

STATE OF NORTH CAROLINA
DEPARTMENT OF TRANSPORTATION
RALEIGH

STANDARD
INTERMEDIATE
STEEL DIAPHRAGMS
FOR 74" MODIFIED BULB TEE
PRESTRESSED CONCRETE
GIRDERS
RIGHT LANE

NORTH CAROLINA PROFESSIONAL SEAL 046632 ENGINEER JAMES P. GREGG

DocuSigned by: James P. Gregg 8BFE024AB0C404...

11/20/2018

| ASSEMBLED BY : A. SMITH | DATE : 7/18 |
|---|---|
| CHECKED BY : E. JOWZA | DATE : 9/18 |
| DRAWN BY : RWW 11/09 | REV. 10/1/11 MAA/GM |
| CHECKED BY : GM 11/09 | REV. 12/17 MAA/THC |

DOCUMENT NOT CONSIDERED FINAL UNLESS ALL SIGNATURES COMPLETED

HNTB

HNTB NORTH CAROLINA, P.C.
NC License No. C-1554
343 E. Six Forks Rd., Suite 200, Raleigh, N.C. 27609

| DRAWN BY | A. SMITH | DATE | 7/18 |
|---|---|---|---|
| CHECKED BY | E. JOWZA | DATE | 9/18 |
| DESIGN ENGINEER OF RECORD | J. GREGG | DATE | 10/18 |

DWG. NO. 18

REVISIONS

| NO. | BY | DATE | NO. | BY | DATE |
|---|---|---|---|---|---|
| 1 | | | 3 | | |
| 2 | | | 4 | | |

SHEET NO. S04-18

TOTAL SHEETS 46

STD. NO. PCG11

DocuSign Envelope ID: 11A1261F-14B1-49AE-A388-908A64E11071

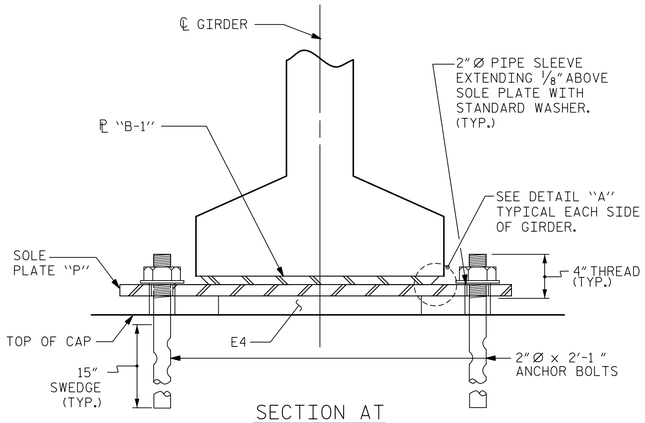


SECTION AT EXPANSION BEARING

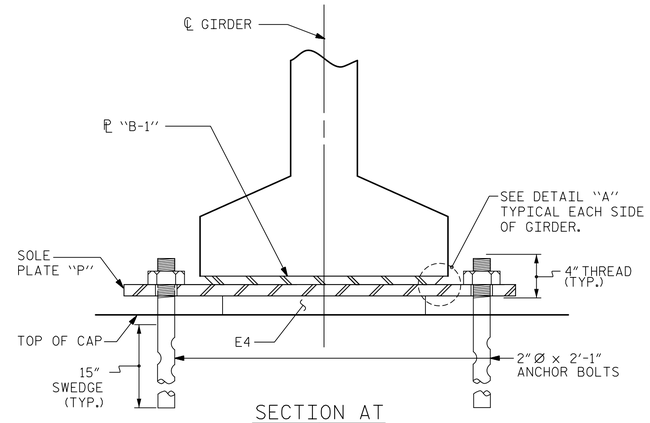


SECTION AT FIXED BEARING

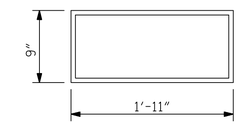


E4 ( 32 REQ'D )

PLAN VIEW OF ELASTOMERIC BEARING

TYPE V

## NOTES

AT ALL FIXED POINTS OF SUPPORT, NUTS FOR ANCHOR BOLTS ARE TO BE TIGHTENED FINGER TIGHT AND THEN BACKED OFF 1/2 TURN. THE THREAD OF THE NUT AND BOLT SHALL THEN BE BURRED WITH A SHARP POINTED TOOL.

THE 2″Ø PIPE SLEEVE SHALL BE CUT FROM SCHEDULE 40 PVC PLASTIC PIPE. THE PVC PLASTIC PIPE SHALL MEET THE REQUIREMENTS OF ASTM D1785.

STEEL SOLE PLATES, ANCHOR BOLTS, NUTS, AND WASHERS SHALL BE GALVANIZED IN ACCORDANCE WITH THE STANDARD SPECIFICATIONS.

PRIOR TO WELDING, GRIND THE GALVANIZED SURFACE OF THE PORTION OF THE EMBEDDED PLATE AND SOLE PLATE THAT ARE TO BE WELDED. AFTER WELDING, DAMAGED GALVANIZED SURFACES SHALL BE REPAIRED IN ACCORDANCE WITH THE STANDARD SPECIFICATIONS.

WHEN WELDING THE SOLE PLATE TO THE EMBEDDED PLATE IN THE GIRDER, USE TEMPERATURE INDICATING WAX PENS, OR OTHER SUITABLE MEANS, TO ENSURE THAT THE TEMPERATURE OF THE SOLE PLATE DOES NOT EXCEED 300°F. TEMPERATURES ABOVE THIS MAY DAMAGE THE ELASTOMER.

SOLE PLATE "P", BOLTS, NUTS, WASHERS, AND PIPE SLEEVE SHALL BE INCLUDED IN THE PAY ITEM FOR PRESTRESSED CONCRETE GIRDERS.

ANCHOR BOLTS SHALL MEET THE REQUIREMENTS OF ASTM A449. NUTS SHALL MEET THE REQUIREMENTS OF AASHTO M291-DH OR AASHTO M292-2H. WASHERS SHALL MEET THE REQUIREMENTS OF AASHTO M293. NO SHOP DRAWINGS ARE REQUIRED FOR ANCHOR BOLTS, NUTS AND WASHERS. SHOP INSPECTION IS REQUIRED.

ALL SURFACES OF BEARING PLATES SHALL BE SMOOTH AND STRAIGHT.

THE ELASTOMER IN THE STEEL REINFORCED BEARINGS SHALL HAVE A SHEAR MODULUS OF 0.160 KSI, IN ACCORDANCE WITH AASHTO M251.

FOR STEEL REINFORCED ELASTOMERIC BEARINGS, SEE SPECIAL PROVISIONS.

ALL SOLE PLATES SHALL BE AASHTO M270 GRADE 36.

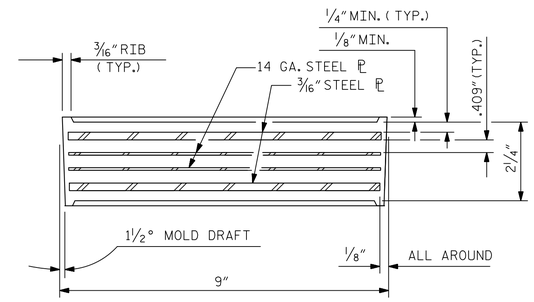


TYPICAL SECTION OF ELASTOMERIC BEARINGS

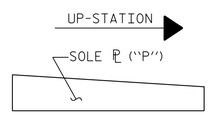


SOLE ℗ PLACEMENT DETAIL

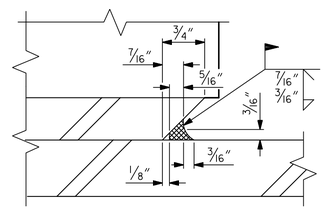


DETAIL "A"

| MAXIMUM ALLOWABLE SERVICE LOADS | |
|---|---|
| D.L.+L.L. (NO IMPACT) | |
| TYPE V | 365 k |

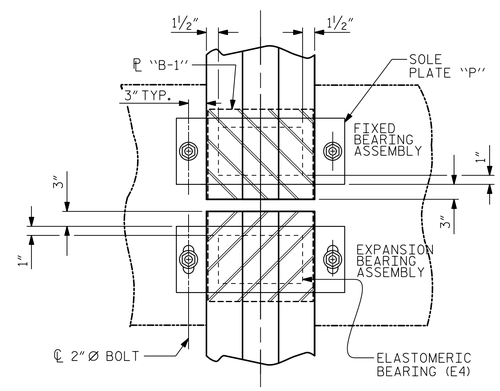


TYPICAL HALF-PLAN

(SHOWING SIMPLE SPAN BENT)

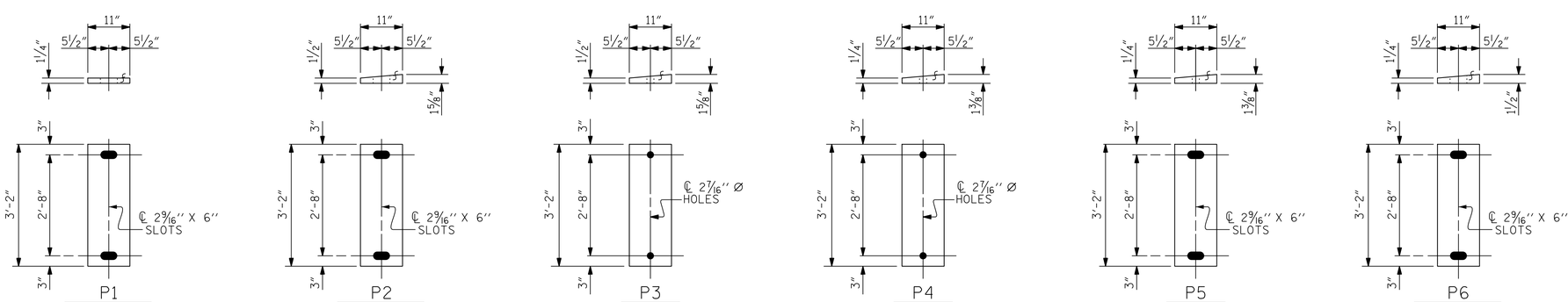


P1 ( EXPANSION ) ( 8 REQ'D )

P2 ( EXPANSION ) ( 8 REQ'D )

P3 ( FIXED ) ( 4 REQ'D )

P4 ( FIXED ) ( 4 REQ'D )

P5 ( EXPANSION ) ( 4 REQ'D )

P6 ( EXPANSION ) ( 4 REQ'D )

SOLE PLATE DETAILS ( "P" )

PROJECT NO. R-1015

CRAVEN COUNTY

STATION: POC STA. 138+31.09 -L-

STATE OF NORTH CAROLINA
DEPARTMENT OF TRANSPORTATION
RALEIGH

STANDARD
ELASTOMERIC BEARING DETAILS
PRESTRESSED CONCRETE GIRDER SUPERSTRUCTURE
RIGHT LANE

DocuSigned by: James P. Gregg
NORTH CAROLINA PROFESSIONAL SEAL 046632 ENGINEER JAMES P. GREGG
11/20/2018

| | | | |
|---|---|---|---|
| ASSEMBLED BY : A. SMITH | | DATE : 7/18 | |
| CHECKED BY : E. JOWZA | | DATE : 9/18 | |
| DRAWN BY : EEM 2/97 | REV. 6/13 | AAC/MAA | |
| CHECKED BY : VAP 2/97 | REV. 1/15 | MAA/GM | |
| | REV. 12/17 | MAA/THC | |

DOCUMENT NOT CONSIDERED FINAL UNLESS ALL SIGNATURES COMPLETED

HNTB NORTH CAROLINA, P.C.
NC License No. C-1554
343 E. Six Forks Rd., Suite 200, Raleigh, N.C. 27609

DRAWN BY A. SMITH DATE 7/18
CHECKED BY E. JOWZA DATE 9/18
DESIGN ENGINEER OF RECORD J. GREGG DATE 10/18

DWG. NO. 19

| REVISIONS | | | | | | SHEET NO. |
|---|---|---|---|---|---|---|
| NO. | BY | DATE | NO. | BY | DATE | S04-19 |
| 1 | | | 3 | | | TOTAL SHEETS |
| 2 | | | 4 | | | 46 |

STD. NO. EB4

DocuSign Envelope ID: 11A1261F-14B1-49AE-A388-908A64E11071

## DEAD LOAD DEFLECTION TABLE FOR SPAN A

| 0.6"Ø LOW RELAXATION STRANDS | GIRDER 1 | | | | | | | | | | |
|---|---|---|---|---|---|---|---|---|---|---|---|
| TENTH POINTS | 0.00 | 0.10 | 0.20 | 0.30 | 0.40 | 0.50 | 0.60 | 0.70 | 0.80 | 0.90 | 1.00 |
| CAMBER (GIRDER ALONE IN PLACE) ↑ | 0.000 | 0.028 | 0.053 | 0.072 | 0.085 | 0.089 | 0.085 | 0.072 | 0.053 | 0.028 | 0.000 |
| DEFLECTION DUE TO SUPERIMPOSED D.L. ✳ ↓ | 0.000 | 0.010 | 0.020 | 0.028 | 0.033 | 0.035 | 0.033 | 0.028 | 0.020 | 0.010 | 0.000 |
| FINAL CAMBER ↑ | 0 | 3/16 | 3/8 | 1/2 | 5/8 | 5/8 | 5/8 | 1/2 | 3/8 | 3/16 | 0 |

## DEAD LOAD DEFLECTION TABLE FOR SPAN A

| 0.6"Ø LOW RELAXATION STRANDS | GIRDERS 2 & 3 | | | | | | | | | | |
|---|---|---|---|---|---|---|---|---|---|---|---|
| TENTH POINTS | 0.00 | 0.10 | 0.20 | 0.30 | 0.40 | 0.50 | 0.60 | 0.70 | 0.80 | 0.90 | 1.00 |
| CAMBER (GIRDER ALONE IN PLACE) ↑ | 0.000 | 0.028 | 0.053 | 0.072 | 0.085 | 0.089 | 0.085 | 0.072 | 0.053 | 0.028 | 0.000 |
| DEFLECTION DUE TO SUPERIMPOSED D.L. ✳ ↓ | 0.000 | 0.011 | 0.022 | 0.030 | 0.036 | 0.037 | 0.036 | 0.030 | 0.022 | 0.011 | 0.000 |
| FINAL CAMBER ↑ | 0 | 3/16 | 3/8 | 1/2 | 9/16 | 5/8 | 9/16 | 1/2 | 3/8 | 3/16 | 0 |

✳ INCLUDES FUTURE WEARING SURFACE IN SUPERIMPOSED DEAD LOAD.
ALL VALUES ARE SHOWN IN FEET (DECIMAL FORM), EXCEPT "FINAL CAMBER", WHICH IS GIVEN IN INCHES (FRACTION FORM).

## DEAD LOAD DEFLECTION TABLE FOR SPAN A

| 0.6"Ø LOW RELAXATION STRANDS | GIRDER 4 | | | | | | | | | | |
|---|---|---|---|---|---|---|---|---|---|---|---|
| TENTH POINTS | 0.00 | 0.10 | 0.20 | 0.30 | 0.40 | 0.50 | 0.60 | 0.70 | 0.80 | 0.90 | 1.00 |
| CAMBER (GIRDER ALONE IN PLACE) ↑ | 0.000 | 0.028 | 0.053 | 0.072 | 0.085 | 0.089 | 0.085 | 0.072 | 0.053 | 0.028 | 0.000 |
| DEFLECTION DUE TO SUPERIMPOSED D.L. ✳ ↓ | 0.000 | 0.009 | 0.018 | 0.025 | 0.030 | 0.031 | 0.030 | 0.025 | 0.018 | 0.009 | 0.000 |
| FINAL CAMBER ↑ | 0 | 1/4 | 7/16 | 9/16 | 11/16 | 11/16 | 11/16 | 9/16 | 7/16 | 1/4 | 0 |

## DEAD LOAD DEFLECTION TABLE FOR SPAN C

| 0.6"Ø LOW RELAXATION STRANDS | GIRDER 1 | | | | | | | | | | |
|---|---|---|---|---|---|---|---|---|---|---|---|
| TENTH POINTS | 0.00 | 0.10 | 0.20 | 0.30 | 0.40 | 0.50 | 0.60 | 0.70 | 0.80 | 0.90 | 1.00 |
| CAMBER (GIRDER ALONE IN PLACE) ↑ | 0.000 | 0.032 | 0.061 | 0.083 | 0.098 | 0.103 | 0.098 | 0.083 | 0.061 | 0.032 | 0.000 |
| DEFLECTION DUE TO SUPERIMPOSED D.L. ✳ ↓ | 0.000 | 0.017 | 0.033 | 0.045 | 0.053 | 0.056 | 0.053 | 0.045 | 0.033 | 0.017 | 0.000 |
| FINAL CAMBER ↑ | 0 | 3/16 | 5/16 | 7/16 | 9/16 | 9/16 | 9/16 | 7/16 | 5/16 | 3/16 | 0 |

## DEAD LOAD DEFLECTION TABLE FOR SPAN C

| 0.6"Ø LOW RELAXATION STRANDS | GIRDERS 2 & 3 | | | | | | | | | | |
|---|---|---|---|---|---|---|---|---|---|---|---|
| TENTH POINTS | 0.00 | 0.10 | 0.20 | 0.30 | 0.40 | 0.50 | 0.60 | 0.70 | 0.80 | 0.90 | 1.00 |
| CAMBER (GIRDER ALONE IN PLACE) ↑ | 0.000 | 0.032 | 0.061 | 0.083 | 0.098 | 0.103 | 0.098 | 0.083 | 0.061 | 0.032 | 0.000 |
| DEFLECTION DUE TO SUPERIMPOSED D.L. ✳ ↓ | 0.000 | 0.018 | 0.035 | 0.048 | 0.057 | 0.059 | 0.057 | 0.048 | 0.035 | 0.018 | 0.000 |
| FINAL CAMBER ↑ | 0 | 3/16 | 5/16 | 7/16 | 1/2 | 1/2 | 1/2 | 7/16 | 5/16 | 3/16 | 0 |

## DEAD LOAD DEFLECTION TABLE FOR SPAN C

| 0.6"Ø LOW RELAXATION STRANDS | GIRDER 4 | | | | | | | | | | |
|---|---|---|---|---|---|---|---|---|---|---|---|
| TENTH POINTS | 0.00 | 0.10 | 0.20 | 0.30 | 0.40 | 0.50 | 0.60 | 0.70 | 0.80 | 0.90 | 1.00 |
| CAMBER (GIRDER ALONE IN PLACE) ↑ | 0.000 | 0.032 | 0.061 | 0.083 | 0.098 | 0.103 | 0.098 | 0.083 | 0.061 | 0.032 | 0.000 |
| DEFLECTION DUE TO SUPERIMPOSED D.L. ✳ ↓ | 0.000 | 0.016 | 0.032 | 0.044 | 0.052 | 0.055 | 0.052 | 0.044 | 0.032 | 0.016 | 0.000 |
| FINAL CAMBER ↑ | 0 | 3/16 | 3/8 | 7/16 | 9/16 | 9/16 | 9/16 | 7/16 | 3/8 | 3/16 | 0 |

## DEAD LOAD DEFLECTION TABLE FOR SPAN D

| 0.6"Ø LOW RELAXATION STRANDS | GIRDER 1 | | | | | | | | | | |
|---|---|---|---|---|---|---|---|---|---|---|---|
| TENTH POINTS | 0.00 | 0.10 | 0.20 | 0.30 | 0.40 | 0.50 | 0.60 | 0.70 | 0.80 | 0.90 | 1.00 |
| CAMBER (GIRDER ALONE IN PLACE) ↑ | 0.000 | 0.026 | 0.049 | 0.067 | 0.078 | 0.082 | 0.078 | 0.067 | 0.049 | 0.026 | 0.000 |
| DEFLECTION DUE TO SUPERIMPOSED D.L. ✳ ↓ | 0.000 | 0.008 | 0.016 | 0.022 | 0.026 | 0.027 | 0.026 | 0.022 | 0.016 | 0.008 | 0.000 |
| FINAL CAMBER ↑ | 0 | 3/16 | 3/8 | 9/16 | 5/8 | 11/16 | 5/8 | 9/16 | 3/8 | 3/16 | 0 |

## DEAD LOAD DEFLECTION TABLE FOR SPAN D

| 0.6"Ø LOW RELAXATION STRANDS | GIRDERS 2 & 3 | | | | | | | | | | |
|---|---|---|---|---|---|---|---|---|---|---|---|
| TENTH POINTS | 0.00 | 0.10 | 0.20 | 0.30 | 0.40 | 0.50 | 0.60 | 0.70 | 0.80 | 0.90 | 1.00 |
| CAMBER (GIRDER ALONE IN PLACE) ↑ | 0.000 | 0.026 | 0.049 | 0.067 | 0.078 | 0.082 | 0.078 | 0.067 | 0.049 | 0.026 | 0.000 |
| DEFLECTION DUE TO SUPERIMPOSED D.L. ✳ ↓ | 0.000 | 0.009 | 0.017 | 0.024 | 0.028 | 0.029 | 0.028 | 0.024 | 0.017 | 0.009 | 0.000 |
| FINAL CAMBER ↑ | 0 | 3/16 | 3/8 | 1/2 | 5/8 | 5/8 | 5/8 | 1/2 | 3/8 | 3/16 | 0 |

## DEAD LOAD DEFLECTION TABLE FOR SPAN D

| 0.6"Ø LOW RELAXATION STRANDS | GIRDER 4 | | | | | | | | | | |
|---|---|---|---|---|---|---|---|---|---|---|---|
| TENTH POINTS | 0.00 | 0.10 | 0.20 | 0.30 | 0.40 | 0.50 | 0.60 | 0.70 | 0.80 | 0.90 | 1.00 |
| CAMBER (GIRDER ALONE IN PLACE) ↑ | 0.000 | 0.026 | 0.049 | 0.067 | 0.078 | 0.082 | 0.078 | 0.067 | 0.049 | 0.026 | 0.000 |
| DEFLECTION DUE TO SUPERIMPOSED D.L. ✳ ↓ | 0.000 | 0.008 | 0.016 | 0.022 | 0.026 | 0.028 | 0.026 | 0.022 | 0.016 | 0.008 | 0.000 |
| FINAL CAMBER ↑ | 0 | 3/16 | 3/8 | 9/16 | 5/8 | 5/8 | 5/8 | 9/16 | 3/8 | 3/16 | 0 |

## DEAD LOAD DEFLECTION TABLE FOR SPAN B

| 0.6"Ø LOW RELAXATION STRANDS | GIRDER 1 | | | | | | | | | | | | | | | | | | | | |
|---|---|---|---|---|---|---|---|---|---|---|---|---|---|---|---|---|---|---|---|---|---|
| TWENTIETH POINTS | 0.00 | 0.05 | 0.10 | 0.15 | 0.20 | 0.25 | 0.30 | 0.35 | 0.40 | 0.45 | 0.50 | 0.55 | 0.60 | 0.65 | 0.70 | 0.75 | 0.80 | 0.85 | 0.90 | 0.95 | 1.00 |
| CAMBER (GIRDER ALONE IN PLACE) ↑ | 0.000 | 0.059 | 0.117 | 0.172 | 0.222 | 0.266 | 0.303 | 0.334 | 0.355 | 0.369 | 0.373 | 0.369 | 0.355 | 0.334 | 0.303 | 0.266 | 0.222 | 0.172 | 0.117 | 0.059 | 0.000 |
| DEFLECTION DUE TO SUPERIMPOSED D.L. ✳ ↓ | 0.000 | 0.039 | 0.077 | 0.114 | 0.149 | 0.179 | 0.205 | 0.226 | 0.241 | 0.250 | 0.253 | 0.250 | 0.241 | 0.226 | 0.205 | 0.179 | 0.149 | 0.114 | 0.077 | 0.039 | 0.000 |
| FINAL CAMBER ↑ | 0 | 1/4 | 1/2 | 11/16 | 7/8 | 1 1/16 | 1 3/16 | 1 5/16 | 1 3/8 | 1 7/16 | 1 7/16 | 1 7/16 | 1 3/8 | 1 5/16 | 1 3/16 | 1 1/16 | 7/8 | 11/16 | 1/2 | 1/4 | 0 |

## DEAD LOAD DEFLECTION TABLE FOR SPAN B

| 0.6"Ø LOW RELAXATION STRANDS | GIRDERS 2 & 3 | | | | | | | | | | | | | | | | | | | | |
|---|---|---|---|---|---|---|---|---|---|---|---|---|---|---|---|---|---|---|---|---|---|
| TWENTIETH POINTS | 0.00 | 0.05 | 0.10 | 0.15 | 0.20 | 0.25 | 0.30 | 0.35 | 0.40 | 0.45 | 0.50 | 0.55 | 0.60 | 0.65 | 0.70 | 0.75 | 0.80 | 0.85 | 0.90 | 0.95 | 1.00 |
| CAMBER (GIRDER ALONE IN PLACE) ↑ | 0.000 | 0.059 | 0.117 | 0.172 | 0.222 | 0.266 | 0.303 | 0.334 | 0.355 | 0.369 | 0.373 | 0.369 | 0.355 | 0.334 | 0.303 | 0.266 | 0.222 | 0.172 | 0.117 | 0.059 | 0.000 |
| DEFLECTION DUE TO SUPERIMPOSED D.L. ✳ ↓ | 0.000 | 0.041 | 0.081 | 0.121 | 0.157 | 0.189 | 0.217 | 0.238 | 0.254 | 0.264 | 0.267 | 0.264 | 0.254 | 0.238 | 0.217 | 0.189 | 0.157 | 0.121 | 0.081 | 0.041 | 0.000 |
| FINAL CAMBER ↑ | 0 | 3/16 | 7/16 | 5/8 | 3/4 | 15/16 | 1 1/16 | 1 1/8 | 1 3/16 | 1 1/4 | 1 1/4 | 1 1/4 | 1 3/16 | 1 1/8 | 1 1/16 | 15/16 | 3/4 | 5/8 | 7/16 | 3/16 | 0 |

## DEAD LOAD DEFLECTION TABLE FOR SPAN B

| 0.6"Ø LOW RELAXATION STRANDS | GIRDER 4 | | | | | | | | | | | | | | | | | | | | |
|---|---|---|---|---|---|---|---|---|---|---|---|---|---|---|---|---|---|---|---|---|---|
| TWENTIETH POINTS | 0.00 | 0.05 | 0.10 | 0.15 | 0.20 | 0.25 | 0.30 | 0.35 | 0.40 | 0.45 | 0.50 | 0.55 | 0.60 | 0.65 | 0.70 | 0.75 | 0.80 | 0.85 | 0.90 | 0.95 | 1.00 |
| CAMBER (GIRDER ALONE IN PLACE) ↑ | 0.000 | 0.059 | 0.117 | 0.172 | 0.222 | 0.266 | 0.303 | 0.334 | 0.355 | 0.369 | 0.373 | 0.369 | 0.355 | 0.334 | 0.303 | 0.266 | 0.222 | 0.172 | 0.117 | 0.059 | 0.000 |
| DEFLECTION DUE TO SUPERIMPOSED D.L. ✳ ↓ | 0.000 | 0.036 | 0.070 | 0.104 | 0.136 | 0.163 | 0.187 | 0.206 | 0.220 | 0.229 | 0.231 | 0.229 | 0.220 | 0.207 | 0.188 | 0.164 | 0.136 | 0.105 | 0.071 | 0.036 | 0.000 |
| FINAL CAMBER ↑ | 0 | 1/4 | 9/16 | 13/16 | 1 1/16 | 1 1/4 | 1 3/8 | 1 9/16 | 1 5/8 | 1 11/16 | 1 11/16 | 1 11/16 | 1 5/8 | 1 1/2 | 1 3/8 | 1 1/4 | 1 1/16 | 13/16 | 9/16 | 1/4 | 0 |

DocuSigned by: James P. Gregg
DB0FE024AB9C404...

NORTH CAROLINA PROFESSIONAL SEAL 046632 ENGINEER JAMES P. GREGG

11/20/2018

PROJECT NO. R-1015

CRAVEN COUNTY

STATION: POC STA. 138+31.09 -L-

STATE OF NORTH CAROLINA
DEPARTMENT OF TRANSPORTATION
RALEIGH

SUPERSTRUCTURE

DEAD LOAD DEFLECTIONS

RIGHT LANE

HNTB NORTH CAROLINA, P.C.
NC License No. C-1554
343 E. Six Forks Rd., Suite 200, Raleigh, N.C. 27609

DRAWN BY A. SMITH DATE 7/18
CHECKED BY E. JOWZA DATE 9/18
DESIGN ENGINEER OF RECORD J. GREGG DATE 10/18

DWG. NO. 20

| REVISIONS | | | | | | SHEET NO. |
|---|---|---|---|---|---|---|
| NO. | BY | DATE | NO. | BY | DATE | S04-20 |
| 1 | | | 3 | | | TOTAL SHEETS |
| 2 | | | 4 | | | 46 |

DOCUMENT NOT CONSIDERED FINAL UNLESS ALL SIGNATURES COMPLETED

DocuSign Envelope ID: 11A1261F-14B1-49AE-A388-908A64E11071

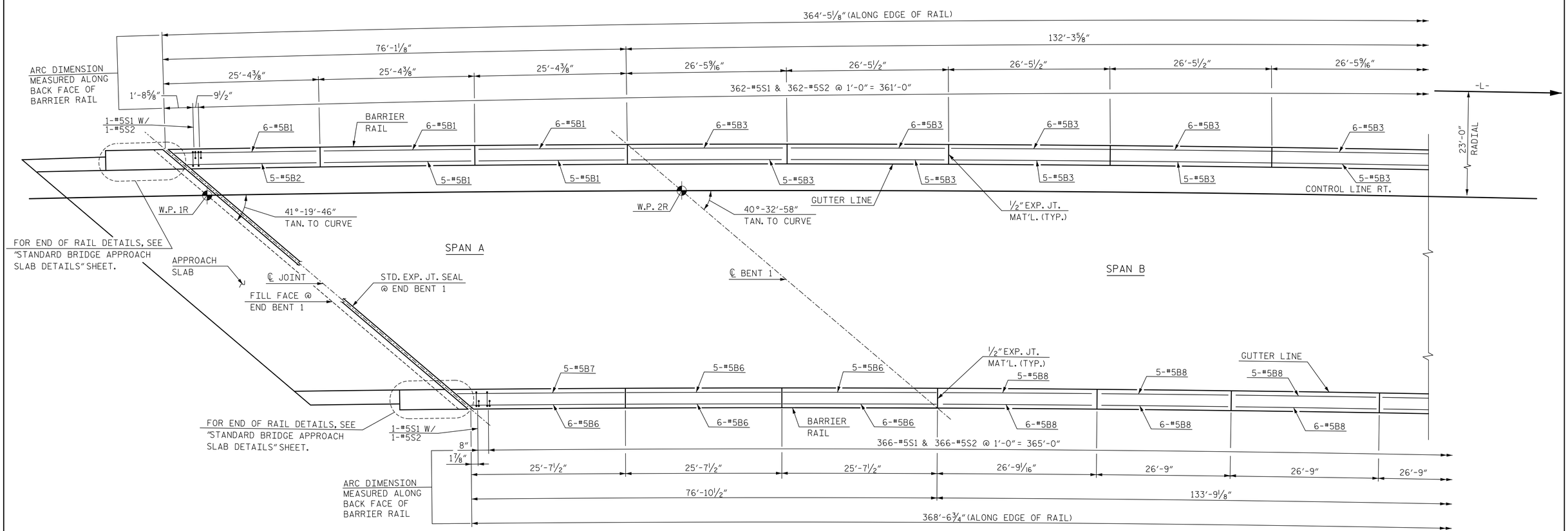


# PLAN OF BARRIER RAIL

NOTE: EDGE OF SLAB NOT SHOWN FOR CLARITY.

**PROJECT NO.** R-1015

CRAVEN **COUNTY**

**STATION:** POC STA. 138+31.09 -L-

SHEET 1 OF 3

DocuSigned by: James P. Gregg
DF7E024AB9C404...

NORTH CAROLINA PROFESSIONAL SEAL 046632 ENGINEER JAMES P. GREGG

11/20/2018

STATE OF NORTH CAROLINA
DEPARTMENT OF TRANSPORTATION
RALEIGH

CONCRETE BARRIER RAIL

RIGHT LANE

HNTB

HNTB NORTH CAROLINA, P.C.
NC License No. C-1554
343 E. Six Forks Rd., Suite 200, Raleigh, N.C. 27609

DRAWN BY A. Smith DATE 7/18
CHECKED BY E. Jowzg DATE 10/18
DESIGN ENGINEER OF RECORD J. GREGG DATE 10/18

DWG. NO. 21

**DOCUMENT NOT CONSIDERED FINAL UNLESS ALL SIGNATURES COMPLETED**

| REVISIONS | | | | | | SHEET NO. |
|---|---|---|---|---|---|---|
| NO. | BY | DATE | NO. | BY | DATE | S04-21 |
| 1 | | | 3 | | | TOTAL SHEETS |
| 2 | | | 4 | | | 46 |

DocuSign Envelope ID: 11A1261F-14B1-49AE-A388-908A64E11071

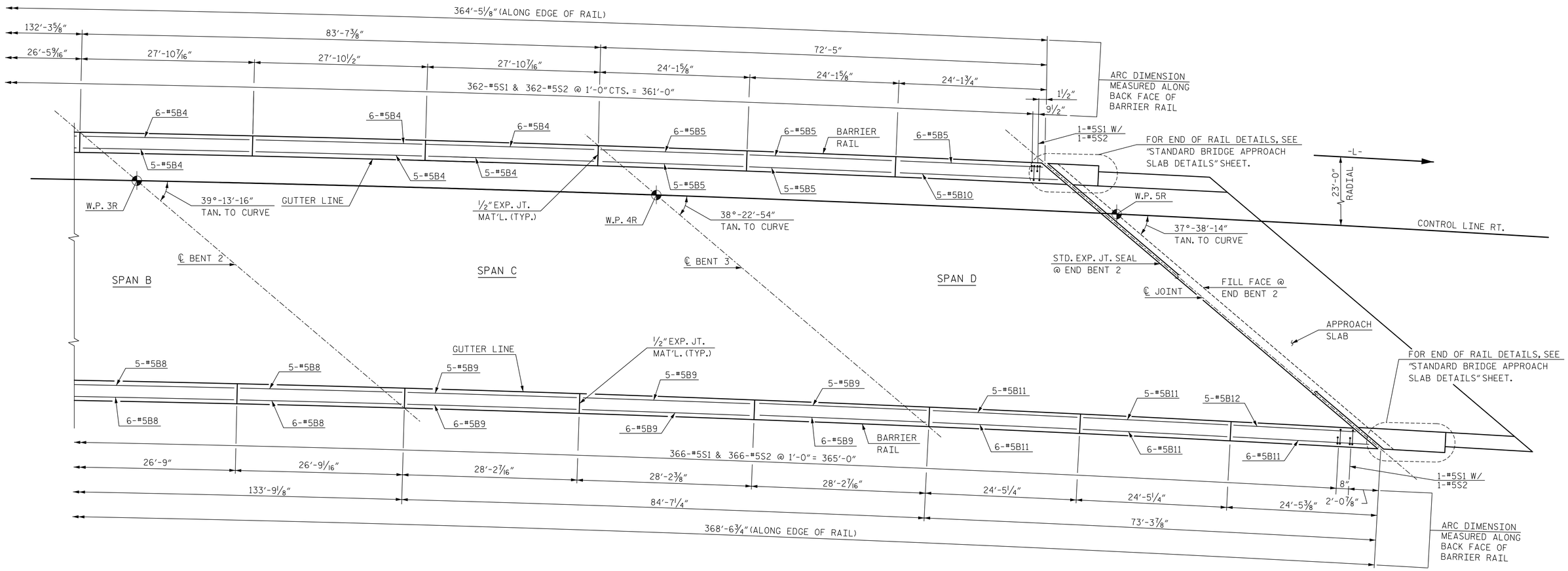


# PLAN OF BARRIER RAIL

NOTE: EDGE OF SLAB NOT SHOWN FOR CLARITY.

**PROJECT NO.** R-1015

CRAVEN **COUNTY**

**STATION:** POC STA. 138+31.09 -L-

SHEET 2 OF 3

DocuSigned by: James P. Gregg
DF0BFE024AB9C404...

NORTH CAROLINA PROFESSIONAL SEAL 046632 ENGINEER JAMES P. GREGG

11/20/2018

STATE OF NORTH CAROLINA
**DEPARTMENT OF TRANSPORTATION**
RALEIGH

## CONCRETE BARRIER RAIL

## RIGHT LANE

HNTB NORTH CAROLINA, P.C.
NC License No. C-1554
343 E. Six Forks Rd., Suite 200, Raleigh, N.C. 27609

DRAWN BY A. Smith DATE 7/18
CHECKED BY E. Jowza DATE 10/18
DESIGN ENGINEER OF RECORD J. GREGG DATE 10/18

DWG. NO. 22

| REVISIONS | | | | | | SHEET NO. |
|---|---|---|---|---|---|---|
| NO. | BY | DATE | NO. | BY | DATE | S04-22 |
| 1 | | | 3 | | | TOTAL SHEETS |
| 2 | | | 4 | | | 46 |

**DOCUMENT NOT CONSIDERED FINAL UNLESS ALL SIGNATURES COMPLETED**

DocuSign Envelope ID: 11A1261F-14B1-49AE-A388-908A64E11071

# NOTES

THE BARRIER RAIL IN EACH SPAN SHALL NOT BE CAST UNTIL ALL SLAB CONCRETE IN THAT SPAN HAS BEEN CAST AND HAS REACHED A MINIMUM COMPRESSIVE STRENGTH OF 3,000 PSI.

ALL REINFORCING STEEL IN BARRIER RAILS SHALL BE EPOXY COATED.

GROOVED CONTRACTION JOINTS, 1/2" IN DEPTH, SHALL BE TOOLED IN ALL EXPOSED FACES OF THE BARRIER RAIL AND IN ACCORDANCE WITH ARTICLE 825-10(B) OF THE STANDARD SPECIFICATIONS. THE CONTRACTION JOINT SHALL BE LOCATED AT EACH THIRD POINT BETWEEN BARRIER RAIL EXPANSION JOINTS. ONLY ONE CONTRACTION JOINT IS REQUIRED AT MIDPOINT OF BARRIER RAIL SEGMENTS LESS THAN 20 FEET IN LENGTH AND NO CONTRACTION JOINTS ARE REQUIRED FOR THOSE SEGMENTS LESS THAN 10 FEET IN LENGTH.

## BAR TYPES

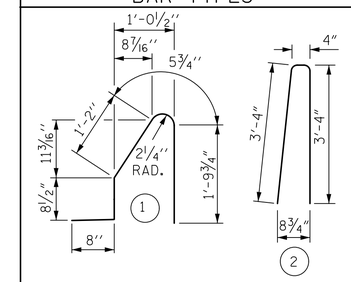


ALL BAR DIMENSIONS ARE OUT TO OUT

## BILL OF MATERIAL

FOR CONCRETE BARRIER RAIL ONLY

| BAR | NO. | SIZE | TYPE | LENGTH | WEIGHT |
|---|---|---|---|---|---|
| | | | | | |
| ✳ B1 | 28 | #5 | STR. | 25'-0" | 730 |
| ✳ B2 | 5 | #5 | STR. | 23'-6" | 123 |
| ✳ B3 | 55 | #5 | STR. | 26'-1" | 1,496 |
| ✳ B4 | 33 | #5 | STR. | 27'-6" | 947 |
| ✳ B5 | 28 | #5 | STR. | 23'-9" | 694 |
| ✳ B6 | 28 | #5 | STR. | 25'-3" | 737 |
| ✳ B7 | 5 | #5 | STR. | 26'-8" | 139 |
| ✳ B8 | 55 | #5 | STR. | 26'-5" | 1,515 |
| ✳ B9 | 33 | #5 | STR. | 27'-10" | 958 |
| ✳ B10 | 5 | #5 | STR. | 25'-4" | 132 |
| ✳ B11 | 28 | #5 | STR. | 24'-1" | 703 |
| ✳ B12 | 5 | #5 | STR. | 22'-3" | 116 |
| | | | | | |
| ✳ S1 | 732 | #5 | 1 | 4'-10" | 3,690 |
| ✳ S2 | 732 | #5 | 2 | 7'-0" | 5,344 |

| | | |
|---|---|---|
| ✳ EPOXY COATED REINFORCING STEEL | 17,324 | LBS. |
| CLASS AA CONCRETE | 99.6 | CU. YDS. |
| CONCRETE BARRIER RAIL | 733.0 | LIN. FT. |

NOTE: FOR BARRIER RAIL EXTENSIONS ON APPROACH SLABS, SEE "STANDARD BRIDGE APPROACH SLAB DETAILS" SHEET.

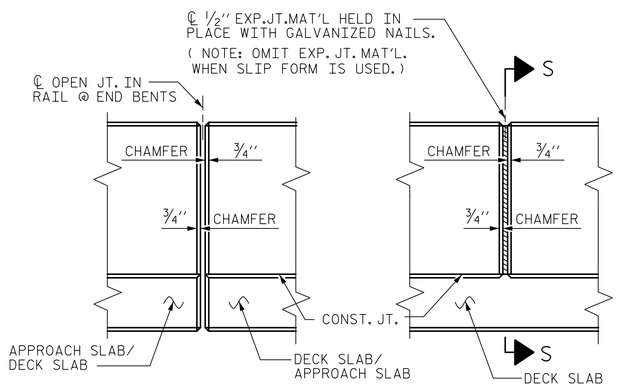


ELEVATION AT EXPANSION JOINTS

## BARRIER RAIL DETAILS

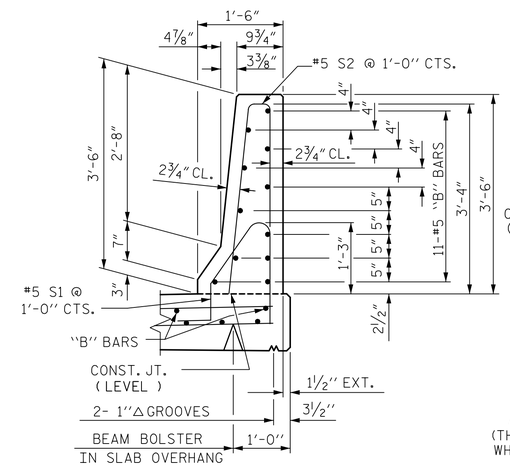


SECTION THRU RAIL

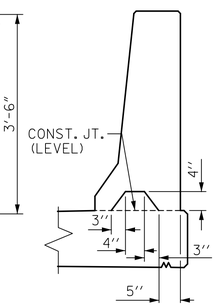


SECTION S-S

AT DAM IN OPEN JOINT (THIS IS TO BE USED ONLY WHEN SLIP FORM IS USED)

PROJECT NO. R-1015

CRAVEN COUNTY

STATION: POC STA. 138+31.09 -L-

SHEET 3 OF 3

DocuSigned by: James P. Gregg

NORTH CAROLINA PROFESSIONAL SEAL 046632 ENGINEER JAMES P. GREGG

11/20/2018

STATE OF NORTH CAROLINA
DEPARTMENT OF TRANSPORTATION
RALEIGH

STANDARD

CONCRETE BARRIER RAIL

RIGHT LANE

| ASSEMBLED BY : A. SMITH | DATE : 7/18 |
|---|---|
| CHECKED BY : E. JOWZA | DATE : 9/18 |

| | | |
|---|---|---|
| DRAWN BY : ARB 5/87 | REV. 7/12 | MAA/GM |
| CHECKED BY : SJD 9/87 | REV. 6/13 | MAA/GM |
| | REV. 12/17 | MAA/THC |

DOCUMENT NOT CONSIDERED FINAL UNLESS ALL SIGNATURES COMPLETED

HNTB

HNTB NORTH CAROLINA, P.C.
NC License No. C-1554
343 E. Six Forks Rd., Suite 200, Raleigh, N.C. 27609

| | | | |
|---|---|---|---|
| DRAWN BY | A. SMITH | DATE | 7/18 |
| CHECKED BY | E. JOWZA | DATE | 9/18 |
| DESIGN ENGINEER OF RECORD | J. GREGG | DATE | 10/18 |

DWG. NO. 23

REVISIONS

| NO. | BY | DATE | NO. | BY | DATE |
|---|---|---|---|---|---|
| 1 | | | 3 | | |
| 2 | | | 4 | | |

SHEET NO. S04-23

TOTAL SHEETS 46

STD. NO. CBR1

DocuSign Envelope ID: 11A1261F-14B1-49AE-A388-908A64E11071

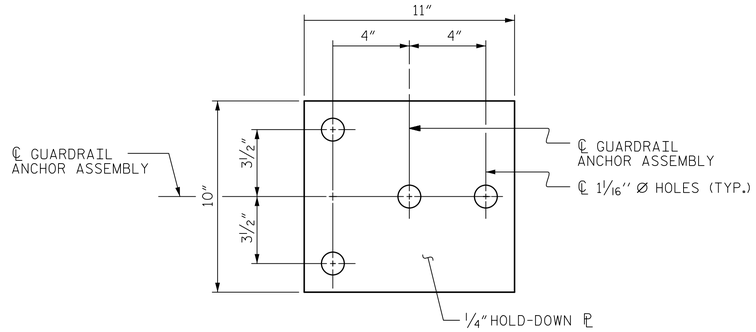


PLAN

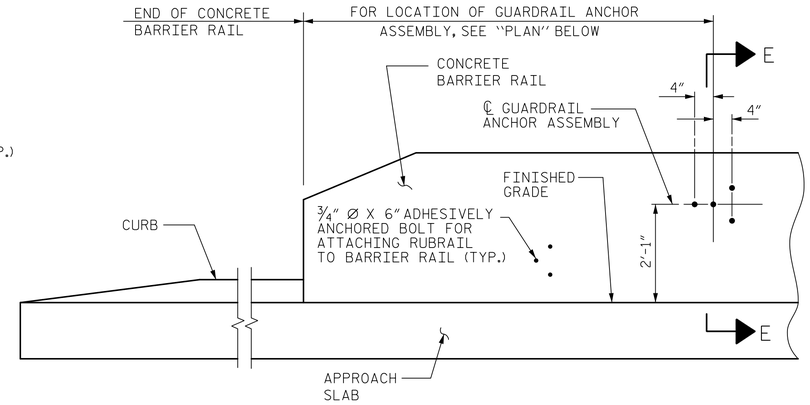


ELEVATION

## NOTES

THE GUARDRAIL ANCHOR ASSEMBLY SHALL CONSIST OF A 1/4" HOLD-DOWN PLATE AND 4 - 7/8" Ø BOLTS WITH NUTS AND WASHERS, RUBRAIL, AND ADHESIVELY ANCHORED BOLTS.

THE HOLD-DOWN PLATE SHALL CONFORM TO AASHTO M270 GRADE 36. AFTER FABRICATION, THE HOLD-DOWN PLATE SHALL BE HOT-DIP GALVANIZED IN ACCORDANCE WITH AASHTO M111.

BOLTS SHALL CONFORM TO THE REQUIREMENTS OF ASTM A307 AND NUTS SHALL CONFORM TO THE REQUIREMENTS OF AASHTO M291. BOLTS, NUTS AND WASHERS SHALL BE GALVANIZED. (AT THE CONTRACTOR'S OPTION, STAINLESS STEEL BOLTS, NUTS AND WASHERS MAY BE USED AS AN ALTERNATE FOR THE 7/8" Ø GALVANIZED BOLTS, NUTS AND WASHERS. THEY SHALL CONFORM TO OR EXCEED THE MECHANICAL REQUIREMENTS OF ASTM A307. THE USE OF THIS ALTERNATE SHALL BE APPROVED BY THE ENGINEER.)

THE GUARDRAIL ANCHOR ASSEMBLY IS REQUIRED AT ALL POINTS WHERE APPROACH GUARDRAIL IS TO BE ATTACHED TO THE END OF BARRIER RAIL. FOR POINTS OF ATTACHMENT, SEE SKETCH.

AFTER INSTALLATION, THE EXPOSED THREAD OF THE BOLT SHALL BE BURRED WITH A SHARP POINTED TOOL.

THE COST OF THE GUARDRAIL ANCHOR ASSEMBLY SHALL BE INCLUDED IN THE UNIT CONTRACT PRICE BID FOR CONCRETE BARRIER RAIL.

THE 1 1/4" Ø HOLES SHALL BE FORMED OR DRILLED WITH A CORE BIT. IMPACT TOOLS WILL NOT BE PERMITTED. ANY CONCRETE DAMAGED BY THIS WORK SHALL BE REPAIRED TO THE SATISFACTION OF THE ENGINEER.

THE C6 X 8.2 RUBRAIL IS TO BE ADHESIVELY ANCHORED TO THE RAIL USING THREE 3/4" Ø X 6" BOLTS WITH WASHERS. LEVEL ONE FIELD TESTING IS REQUIRED, AND THE YIELD LOAD OF THE 3/4" Ø BOLT IS 12 KIPS. FOR ADHESIVELY ANCHORED ANCHOR BOLTS OR DOWELS, SEE STANDARD SPECIFICATIONS. SEE ROADWAY STANDARD 862.03 FOR DETAILS AND LOCATION OF THE RUBRAIL.

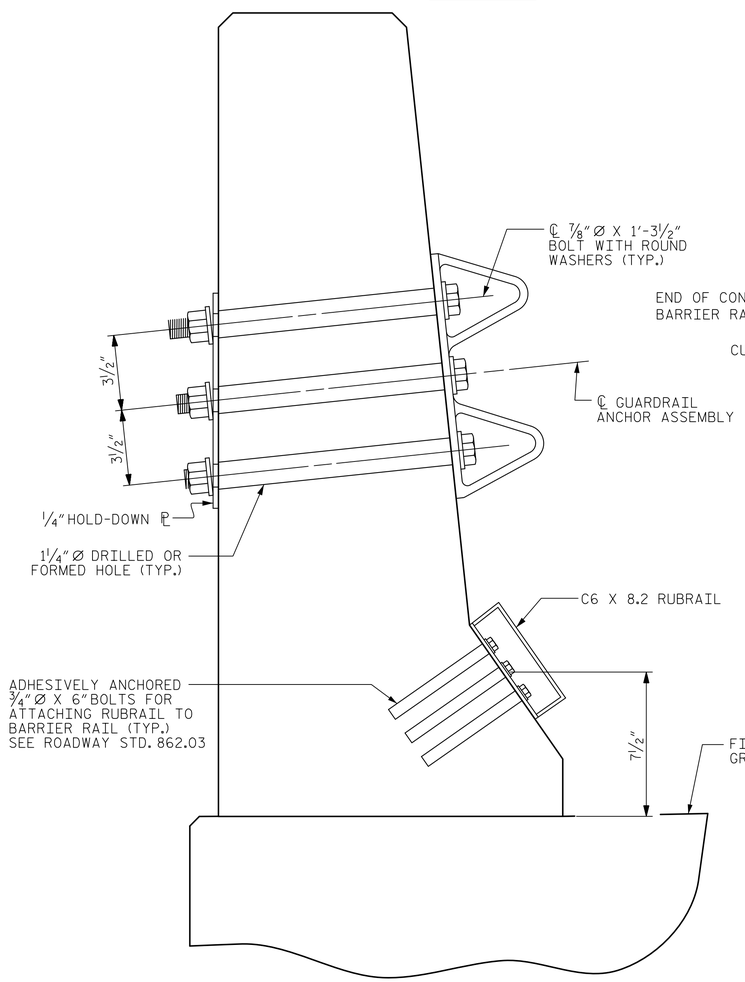


SECTION E-E

## GUARDRAIL ANCHOR ASSEMBLY DETAILS

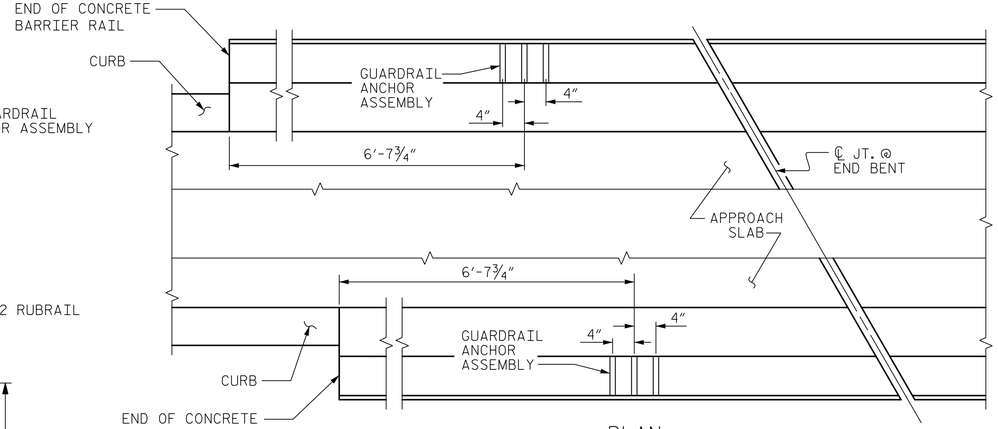


PLAN

## LOCATION OF ANCHORS FOR GUARDRAIL

END BENT 1 SHOWN, END BENT 2 SIMILAR.

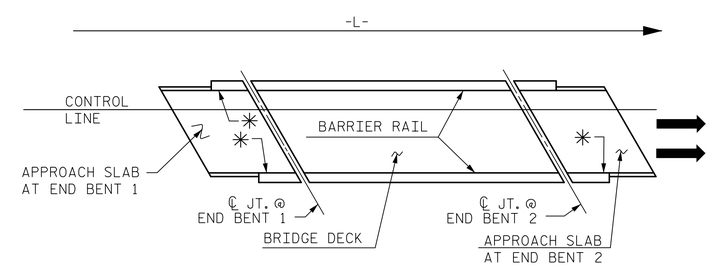


SKETCH SHOWING POINTS OF ATTACHMENTS

✳ DENOTES GUARDRAIL ANCHOR ASSEMBLY

PROJECT NO. R-1015

CRAVEN COUNTY

STATION: POC STA. 138+31.09 -L-

DocuSigned by: James P. Gregg

NORTH CAROLINA PROFESSIONAL SEAL 046632 ENGINEER JAMES P. GREGG

11/20/2018

STATE OF NORTH CAROLINA
DEPARTMENT OF TRANSPORTATION
RALEIGH

STANDARD
GUARDRAIL ANCHORAGE FOR BARRIER RAIL

RIGHT LANE

| ASSEMBLED BY : A. SMITH | DATE : 7/18 |
|---|---|
| CHECKED BY : E. JOWZA | DATE : 9/18 |

| DRAWN BY : TLA 5/06 | REV. 7/12 MAA/GM |
|---|---|
| CHECKED BY : GM 5/06 | REV. 6/13 MAA/GM |
| | REV. 12/17 MAA/THC |

DOCUMENT NOT CONSIDERED FINAL UNLESS ALL SIGNATURES COMPLETED

HNTB NORTH CAROLINA, P.C.
NC License No. C-1554
343 E. Six Forks Rd., Suite 200, Raleigh, N.C. 27609

| DRAWN BY | A. SMITH | DATE | 7/18 |
|---|---|---|---|
| CHECKED BY | E. JOWZA | DATE | 9/18 |
| DESIGN ENGINEER OF RECORD | J. GREGG | DATE | 10/18 |

DWG. NO. 24

| REVISIONS | | | | | | SHEET NO. |
|---|---|---|---|---|---|---|
| NO. | BY | DATE | NO. | BY | DATE | S04-24 |
| 1 | | | 3 | | | TOTAL SHEETS |
| 2 | | | 4 | | | 46 |

STD. NO. GRA2

DocuSign Envelope ID: 88A0B777-7A2E-445F-ADAD-2E515F175E6D

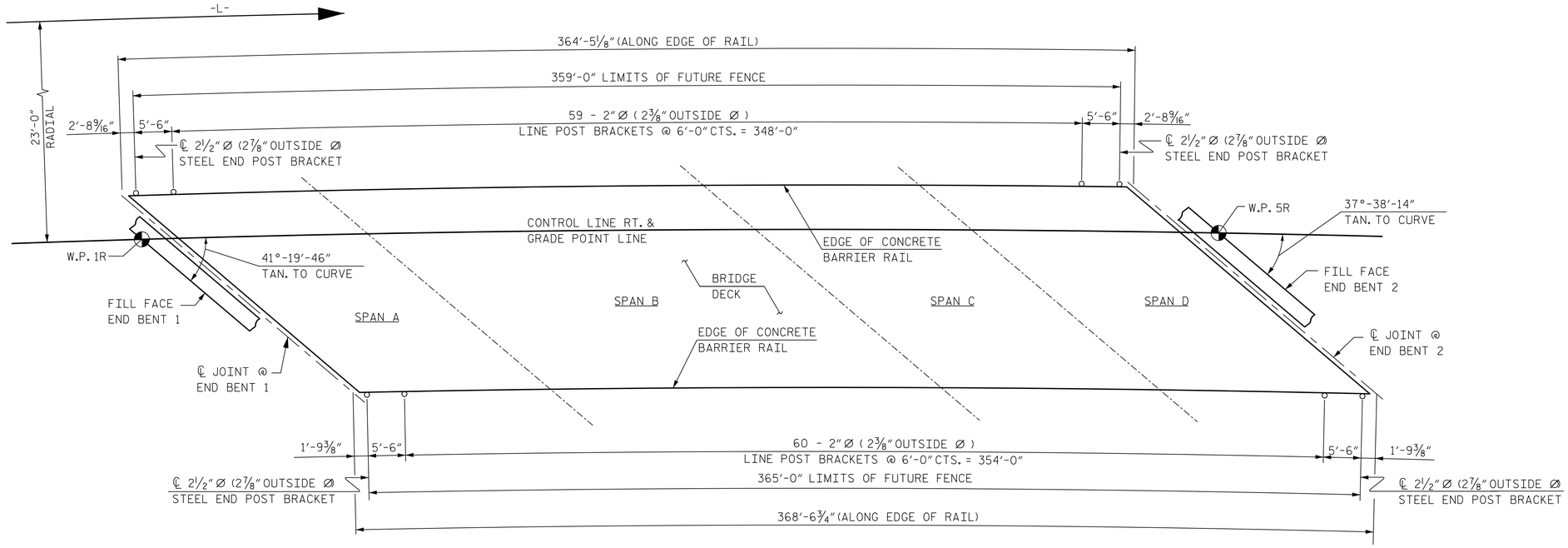


## PLAN OF FENCE POST SPACING

(PAY LENGTH 724.00 FEET)

NOTE: EDGE OF SLAB NOT SHOWN FOR CLARITY.

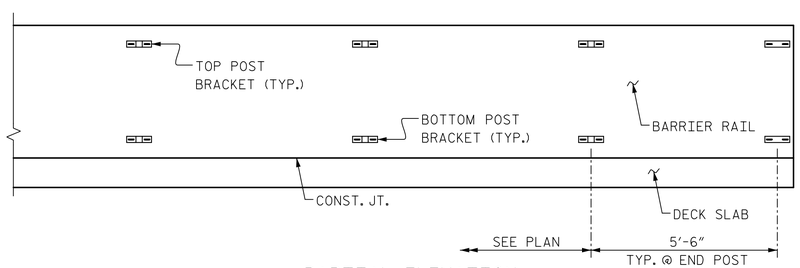


## PARTIAL ELEVATION

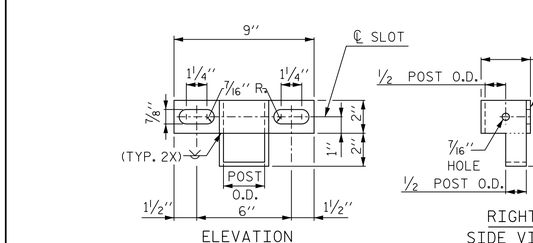


ELEVATION

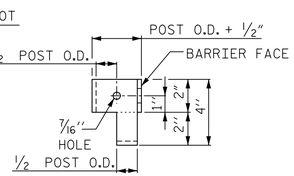


RIGHT SIDE VIEW

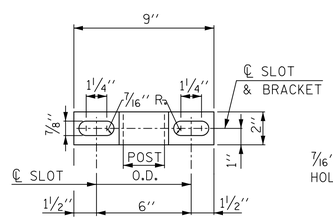


ELEVATION

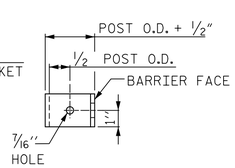


SIDE VIEW

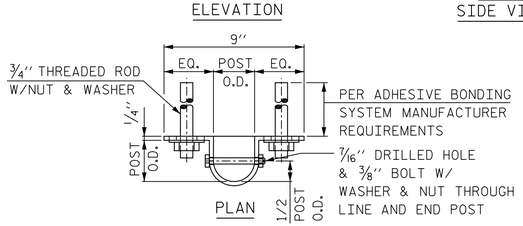


BOTTOM POST BRACKET

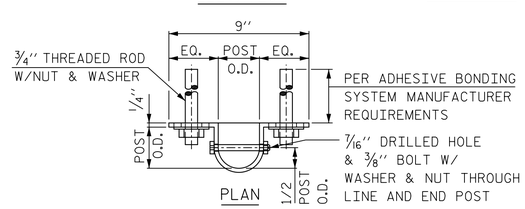


TOP POST BRACKET

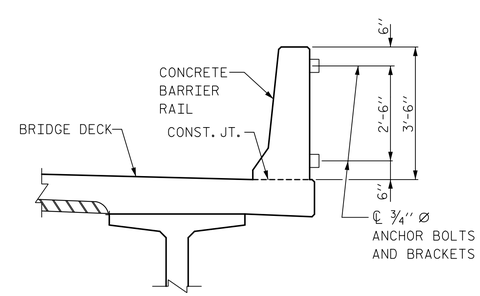


SECTION THRU FENCE

## NOTES:

MATERIAL FOR ANCHOR BOLTS SHALL BE TYPE 304 STAINLESS STEEL WITH A MINIMUM 9000 PSI ULTIMATE STRENGTH. NUTS AND WASHERS SHALL BE TYPE 304 STAINLESS STEEL. ANCHOR BOLTS SHALL BE EMBEDDED AS PER ADHESIVE BONDING SYSTEM MANUFACTURER SPECIFICATIONS. NUTS SHALL BE AMERICAN STANDARD FINISHED HEXAGON THICK NUTS, CLASS 2B THREADS.

FOR SETTING ANCHOR BOLTS, THE CONTRACTOR SHALL USE AN ADHESIVE BONDING SYSTEM. SEE THE REQUIREMENTS OF SECTION 420-13 OF THE STANDARD SPECIFICATIONS FOR ADHESIVELY ANCHORED ANCHOR BOLTS OR DOWELS. LEVEL ONE FIELD TESTING OF BONDING SYSTEM IS REQUIRED AND THE YIELD LOAD OF THE 3/4" Ø BOLTS IS 12.0 KIPS.

ALL BRACKETS SHALL MEET THE REQUIREMENTS OF SECTION 1050 OF THE STANDARD SPECIFICATIONS, GALVANIZE ALL STEEL PARTS AND HARDWARE IN ACCORDANCE WITH ARTICLE 1076 OF THE STANDARD SPECIFICATIONS.

FENCE POST LOCATIONS SHALL BE SHIFTED, AS NECESSARY, TO MAINTAIN 12" MINIMUM DISTANCE FROM ANCHOR BOLT TO JOINTS IN BARRIER RAIL.

DIMENSIONS ARE SHOWN ALONG OUTSIDE FACE OF BARRIER RAIL.

BRACKETS SHALL BE INSTALLED TO PERMIT STANDARD CHAIN LINK FENCE DETAILS TO BE UTILIZED IN THE FUTURE.

ALL THE COSTS ASSOCIATED WITH THE MATERIALS AND INSTALLATION OF THE POST BRACKETS SHALL BE INCLUDED IN THE "CONCRETE BARRIER RAIL" PAY ITEM.

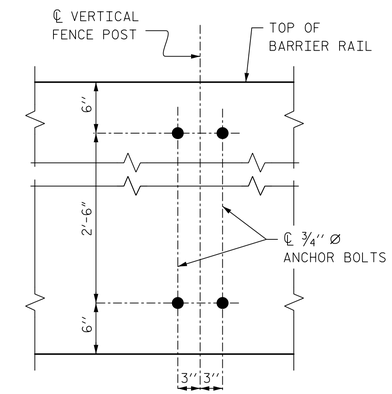


BOLT SETTING DETAIL

PROJECT NO. R-1015

CRAVEN COUNTY

STATION: POC STA. 138+31.09 -L-

12/6/2018

DocuSigned by: P. Gregg

NORTH CAROLINA PROFESSIONAL SEAL 046632 ENGINEER JAMES P. GREGG

**DOCUMENT NOT CONSIDERED FINAL UNLESS ALL SIGNATURES COMPLETED**

HNTB NORTH CAROLINA, P.C.
NC License No. C-1554
343 E. Six Forks Rd., Suite 200, Raleigh, N.C. 27609

| | | | |
|---|---|---|---|
| DRAWN BY | A. SMITH | DATE | 7/18 |
| CHECKED BY | E. JOWZA | DATE | 9/18 |
| DESIGN ENGINEER OF RECORD | J. GREGG | DATE | 10/18 |

DWG. NO. 25

STATE OF NORTH CAROLINA
DEPARTMENT OF TRANSPORTATION
RALEIGH

SUPERSTRUCTURE

BRIDGE MOUNTED CHAIN LINK FENCE DETAILS

RIGHT LANE

| REVISIONS | | | | | | SHEET NO. |
|---|---|---|---|---|---|---|
| NO. | BY | DATE | NO. | BY | DATE | S04-25 |
| 1 | | | 3 | | | TOTAL SHEETS |
| 2 | | | 4 | | | 46 |

DocuSign Envelope ID: 88A0B777-7A2E-445F-ADAD-2E515F175E6D

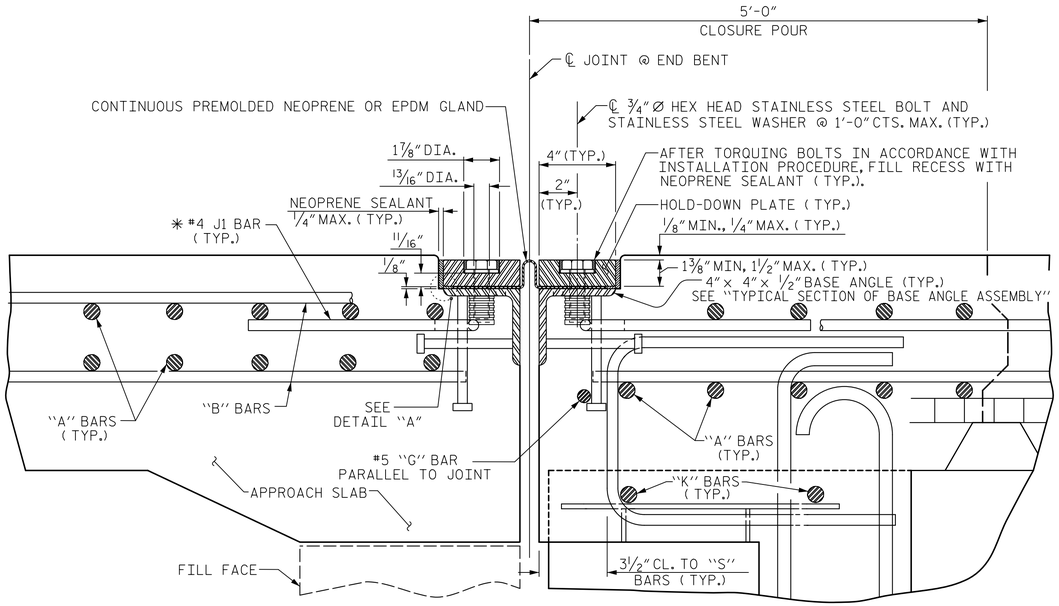


# EXPANSION JOINT DETAILS

SECTION NORMAL TO JOINT -- PRESTRESSED GIRDER SUPERSTRUCTURE

✳ THE QUANTITY OF #4 J1 BARS ON THE BILL OF MATERIAL IS BASED ON 1'-0" CENTERS. J1 BARS SHALL BE PLACED AT EACH VERTICAL STUD ANCHOR BOLT. IN THE EVENT THAT THE NUMBER OF VERTICAL STUD ANCHORS EXCEEDS THE NUMBER OF J1 BARS SPECIFIED, ADDITIONAL J1 BARS WILL NOT BE REQUIRED.

## INSTALLATION PROCEDURE

1. A TEMPLATE OR OTHER SUITABLE DEVICE SHALL BE USED TO FORM THE TOP OF THE EXPANSION JOINT SEAL BLOCKOUT TO THE PROPER DEPTH AND WIDTH. THE TEMPLATE SHALL BE 4 1/8" TO 4 1/4" WIDE AND OF SUCH THICKNESS AS TO PROVIDE FOR CORRECT FINAL ELEVATION OF TOP OF HOLD-DOWN PLATES. THE TEMPLATE SHALL BE ATTACHED TO THE BASE ANGLE ASSEMBLY WITH THE 3/4" Ø HEX HEAD BOLTS PROVIDED FOR THE HOLD-DOWN PLATES. A 1" Ø HOLE SHALL BE PROVIDED IN THE TEMPLATE CENTERED OVER EACH WEEP HOLE IN THE 4" X 4" X 1/2" BASE ANGLE. OTHER METHODS OF INSURING DRAINAGE THROUGH WEEP HOLES MAY BE EMPLOYED SUBJECT TO ENGINEER'S APPROVAL.
2. AFTER THE CONCRETE HAS BEEN CAST ON BOTH SIDES OF THE JOINT, REMOVE THE TEMPLATE. THOROUGHLY CLEAN THE BOLT HOLES AND THE ANGLE PLATE. REMOVE ANY EXCESS CONCRETE THAT COMES OUT OF THE WEEP HOLES. ANY DAMAGED STEEL SHALL BE REPAIRED IN ACCORDANCE WITH THE SPECIAL PROVISION FOR THERMAL SPRAYED COATINGS (METALLIZATION).
3. LAY THE GLAND ON THE BASE ANGLE AND FIELD MARK THE GLAND FOR THE BOLT HOLES. HOLES IN THE GLAND SHALL BE PUNCHED 7/8" IN DIAMETER WITH A HAND PUNCH.
4. IN ORDER TO CHECK FOR PROPER ALIGNMENT, PLACE THE GLAND AND HOLD-DOWN PLATES ON THE BASE ANGLE. DO NOT APPLY NEOPRENE SEALANT. BOLT THE HOLD-DOWN PLATES TO THE BASE ANGLE BUT DO NOT TIGHTEN. THE ENGINEER SHALL INSPECT THE JOINT SEAL DEVICE FOR PROPER ALIGNMENT.
5. AFTER INSPECTION, REMOVE THE HOLD-DOWN PLATES AND GLAND. APPLY NEOPRENE SEALANT TO THE BASE ANGLE IN ACCORDANCE WITH THE "INSTALLATION SKETCH". PLACE GLAND AND HOLD-DOWN PLATES ON THE BASE ANGLE. BOLT THE HOLD-DOWN PLATES TO THE BASE ANGLE ASSEMBLYAND TORQUE THE BOLTS TO 88 FT-LBS WITH A TORQUE WRENCH. CHECK THE TORQUE AFTER THREE (3) HOURS AND, IF NECESSARY, RETIGHTEN TO 88 FT-LBS. A FINAL CHECK SHALL BE MADE AT SEVEN (7) DAYS. TORQUE SHALL NOT BE LESS THAN 80 FT-LBS AFTER SEVEN (7) DAYS.
6. AFTER PROPER TORQUING, CLEAN THE BOLT HOLE RECESSES, THE RECESS BETWEEN THE JOINT SEAL DEVICE AND CONCRETE, AND THE LIFTING HOLES IN THE HOLD-DOWN PLATE, AND COMPLETELY FILL THESE RECESSES AND LIFTING HOLES WITH NEOPRENE SEALANT.

## GENERAL NOTES

1. FOR EXPANSION JOINT SEALS, SEE SPECIAL PROVISIONS.
2. ALL PLATES AND ANGLES SHALL CONFORM TO AASHTO M270 GRADE 36 STEEL OR APPROVED EQUAL. ALL HOLD-DOWN BOLTS SHALL CONFORM TO ASTM F593 ALLOY 304 STAINLESS STEEL AND WASHERS SHALL CONFORM TO ASTM F844 EXCEPT THEY SHALL BE MADE FROM ALLOY 304 STAINLESS STEEL. ALL STUD ANCHORS SHALL CONFORM TO AASHTO M169, GRADES 1010 THRU 1020 OR APPROVED EQUAL. ALL CONCRETE INSERTS SHALL BE CLOSED END AND SHALL CONFORM TO AASHTO M169, GRADE 12L14. TENSILE CAPACITY SHALL BE 3000 LBS. MINIMUM.
3. FOR JOINTS SKEWED LESS THAN 50°OR MORE THAN 130°, ONLY A CORRUGATED GLAND SHALL BE USED.
4. CLOSED END FERRULES AND STUD ANCHORS SHALL BE SHOP WELDED AND ALL HOLES SHALL BE SHOP DRILLED AS SHOWN ON PLANS. STUD ANCHORS SHALL BE ELECTRIC ARC END WELDED WITH COMPLETE FUSION.
5. SURFACES COMING IN CONTACT WITH NEOPRENE SHALL BE GROUND SMOOTH PRIOR TO METALLIZING.
6. UPON COMPLETION OF SHOP FABRICATION, THE HOLD-DOWN PLATE AND BASE ANGLE ASSEMBLY, AS SHOWN IN THE " TYPICAL SECTION OF BASE ANGLE ASSEMBLY", SHALL BE METALLIZED IN ACCORDANCE WITH THE STANDARD SPECIFICATIONS. FOR THERMAL SPRAYED COATINGS (METALLIZATION), SEE SPECIAL PROVISIONS.
7. THE COVER PLATES SHALL BE METALLIZED IN ACCORDANCE WITH THE STANDARD SPECIFICATIONS. FOR THERMAL SPRAYED COATINGS (METALLIZATION), SEE SPECIAL PROVISIONS.
8. BASE ANGLE ASSEMBLY SHALL BE CONTINUOUS FOR THE LENGTH OF THE JOINT. FINISHED WELD SHALL BE GROUND SMOOTH AND REPAIRED IN ACCORDANCE WITH THE SPECIAL PROVISION FOR THERMAL SPRAYED COATINGS (METALLIZATION).
9. FIELD SPLICES OF HOLD-DOWN PLATES SHALL BE KEPT TO A MINIMUM. CONTRACTOR SHALL FURNISH DETAILED PLANS SHOWING PROPOSED SPLICE LOCATIONS FOR APPROVAL. HOLD-DOWN PLATES SHALL NOT EXCEED 20' LENGTHS UNLESS APPROVED BY THE ENGINEER.
10. NO ALTERNATE JOINT DETAILS SHALL BE PERMITTED IN LIEU OF THOSE SHOWN ON THESE PLANS.
11. THE CONTRACTOR MAY, AT HIS OPTION, USE ADHESIVELY ANCHORED ANCHOR BOLTS IN PLACE OF CONCRETE INSERTS FOR COVER PLATES. THE YIELD LOAD OF THE 3/4" Ø BOLT IS 10 KIPS. FIELD TESTING OF THE ADHESIVE BONDING SYSTEM IS NOT REQUIRED.
12. THE FABRICATOR SHALL PROVIDE 1/2" Ø THREADED HOLES IN THE HOLD-DOWN PLATES TO ASSIST IN LIFTING AND PLACING. THE HOLES SHALL BE 3/4" DEEP AT 6'-0" MAXIMUM SPACING AND A MINIMUM OF TWO HOLES PER PLATE.

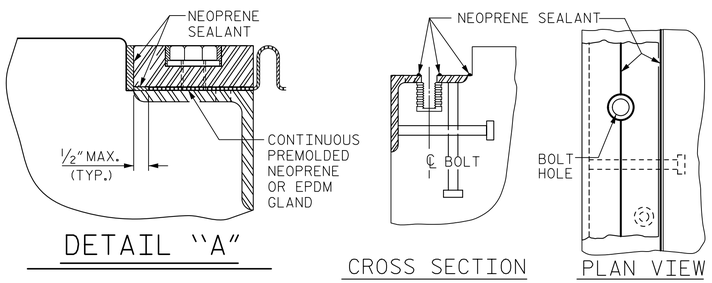


DETAIL "A"

INSTALLATION SKETCH

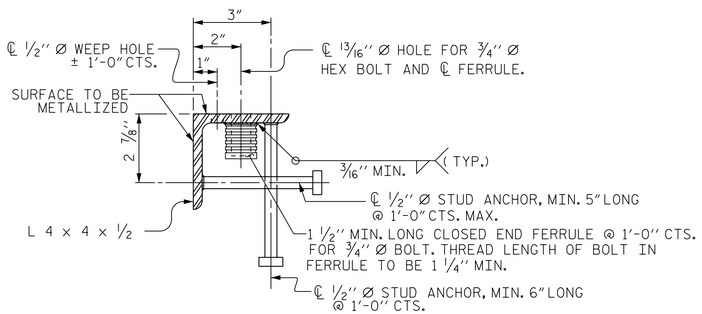


TYPICAL SECTION OF BASE ANGLE ASSEMBLY

| MOVEMENT AND SETTING AT JOINT | | | | | |
|---|---|---|---|---|---|
| END BENT NO. | SKEW ANGLE | TOTAL MOVEMENT (ALONG ℄ RDWY) | PERPENDICULAR JOINT OPENING AT 45° F | PERPENDICULAR JOINT OPENING AT 60° F | PERPENDICULAR JOINT OPENING AT 90° F |
| 1 | 41°-19'-46" TAN. TO CURVE | 1 1/8" | 1 1/2" | 1 3/8" | 1 1/8" |
| 2 | 37°-38'-14" TAN. TO CURVE | 1 1/16" | 1 7/16" | 1 5/16" | 1 1/8" |

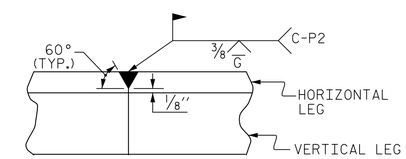


DETAIL- FIELD WELD SPLICE OF BASE ANGLE

PROJECT NO. R-1015

CRAVEN COUNTY

STATION: POC STA. 138+31.09 -L-

SHEET 1 OF 2

STATE OF NORTH CAROLINA
DEPARTMENT OF TRANSPORTATION
RALEIGH

STANDARD

EXPANSION JOINT SEAL DETAILS

RIGHT LANE

NORTH CAROLINA PROFESSIONAL SEAL 046632 ENGINEER JAMES P. GREGG

DocuSigned by: James P. Gregg 6A0B9C404...

12/6/2018

HNTB NORTH CAROLINA, P.C.
NC License No. C-1554
343 E. Six Forks Rd., Suite 200, Raleigh, N.C. 27609

DRAWN BY A. SMITH DATE 7/18
CHECKED BY E. JOWZA DATE 9/18
DESIGN ENGINEER OF RECORD J. GREGG DATE 10/18

DWG. NO. 26

| REVISIONS | | | | | | SHEET NO. |
|---|---|---|---|---|---|---|
| NO. | BY | DATE | NO. | BY | DATE | S04-26 |
| 1 | | | 3 | | | TOTAL SHEETS |
| 2 | | | 4 | | | 46 |

DOCUMENT NOT CONSIDERED FINAL UNLESS ALL SIGNATURES COMPLETED

| | | | |
|---|---|---|---|
| ASSEMBLED BY : A. SMITH | | DATE : 7/18 | |
| CHECKED BY : E. JOWZA | | DATE : 9/18 | |
| DRAWN BY : REK | 9/87 | REV. 10/11/11 | MAA/GM |
| CHECKED BY : CRK | 10/87 | REV. 10/17 | MAA/THC |
| | | REV. 6/18 | MAA/THC |

STD. NO. EJS1

DocuSign Envelope ID: 11A1261F-14B1-49AE-A388-908A64E11071




## CONCRETE INSERT

** EACH WELDED ATTACHMENT OF WIRE TO FERRULE SHALL DEVELOP THE TENSILE STRENGTH OF THE WIRE.

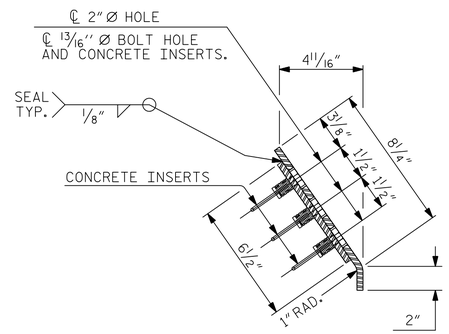


END VIEW

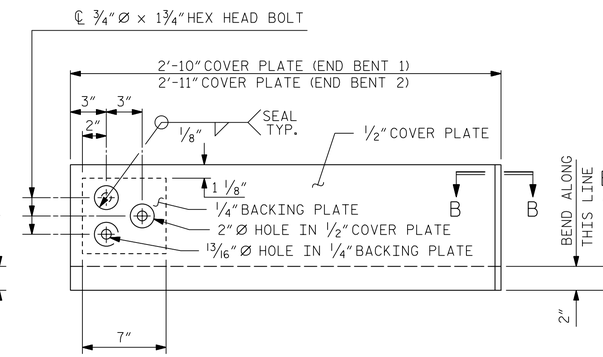


TYPE I - ELEVATION VIEW

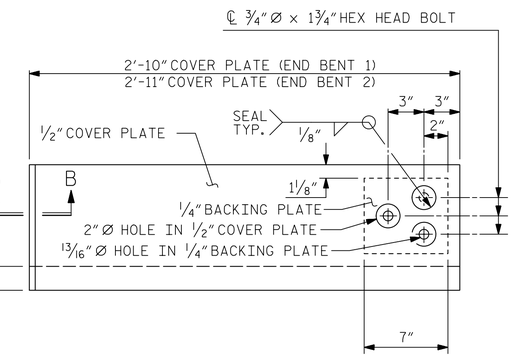


TYPE II - ELEVATION VIEW

## COVER PLATE DETAILS

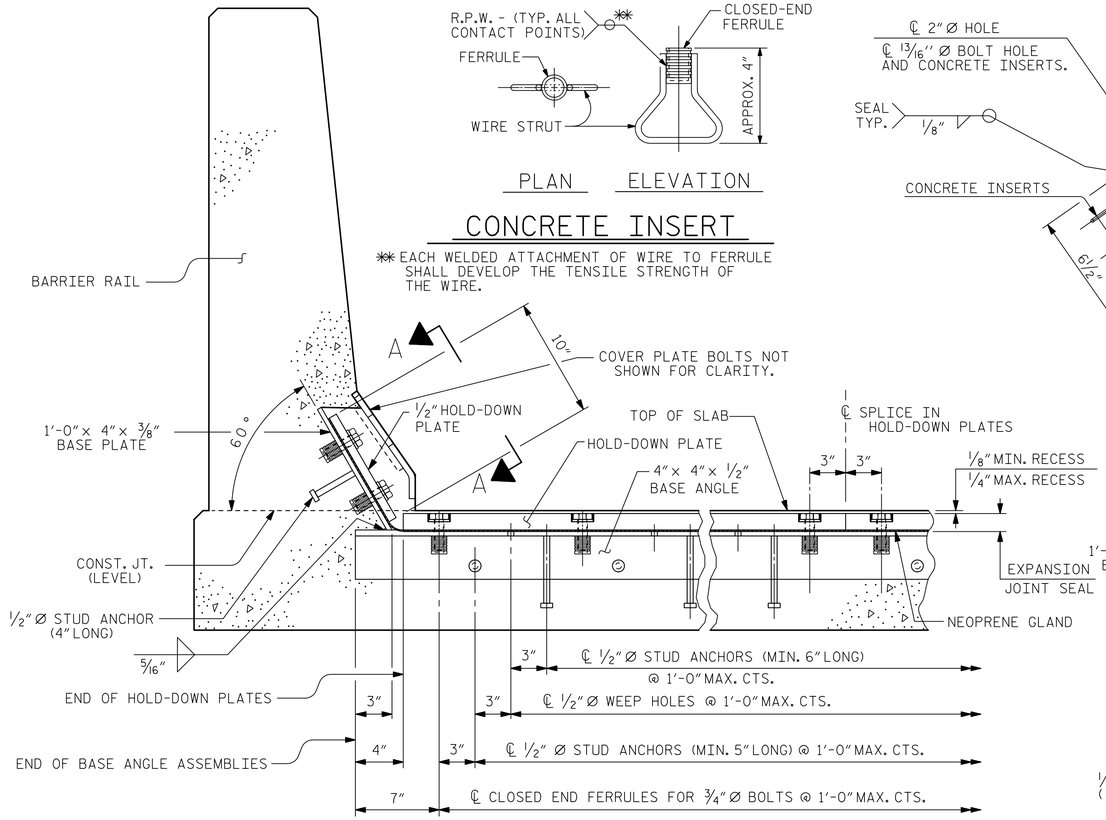


## SECTION THRU RAIL NORMAL TO JOINT

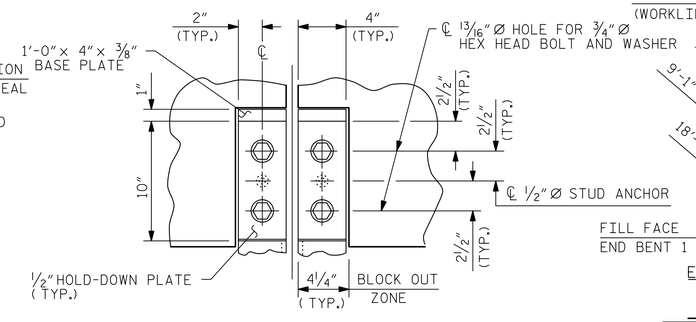


## SECTION A - A

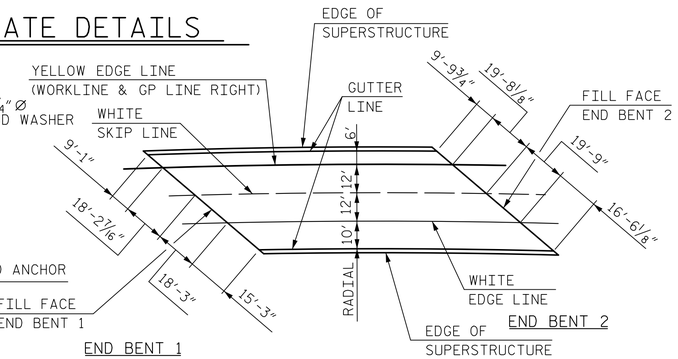


## PAVEMENT MARKING ALIGNMENT

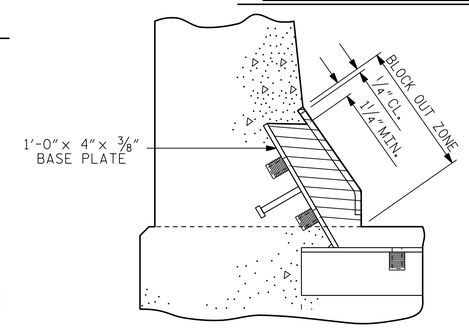


## BLOCK OUT DETAIL

SEE "SECTION A-A" FOR OTHER DETAILS

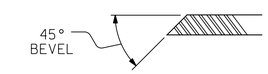


## SECTION B - B

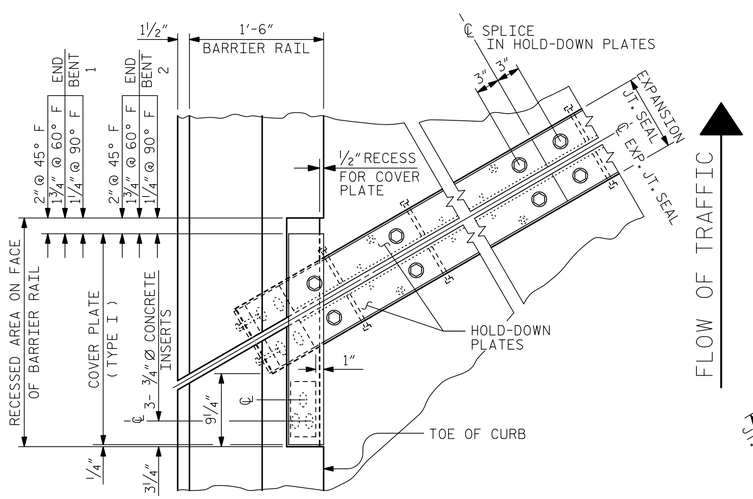


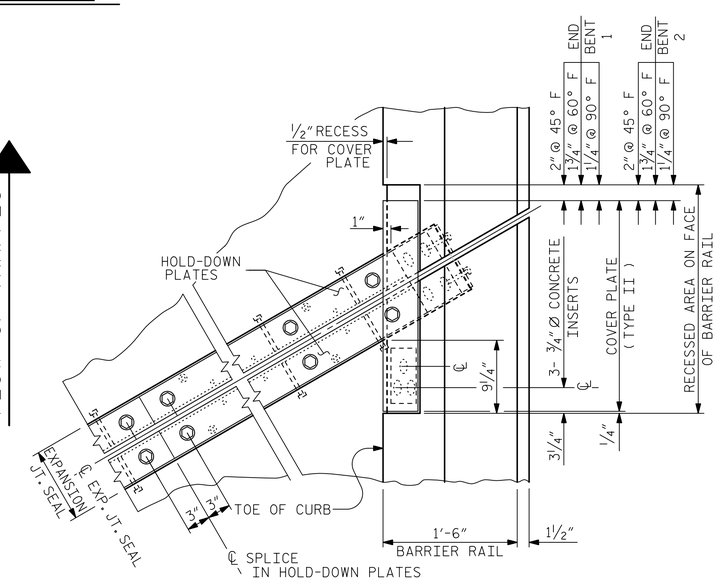


## PLAN OF EXPANSION JOINT SEAL

PROJECT NO. R-1015

CRAVEN COUNTY

STATION: POC STA. 138+31.09 -L-

SHEET 2 OF 2

STATE OF NORTH CAROLINA
DEPARTMENT OF TRANSPORTATION
RALEIGH

STANDARD

# EXPANSION JOINT SEAL DETAILS FOR BARRIER RAIL

RIGHT LANE

DocuSigned by: James P. Gregg
DocuSign envelope ID: 0BFE024AB9C404...

NORTH CAROLINA PROFESSIONAL SEAL 046632 ENGINEER JAMES P. GREGG

11/20/2018

| | | | |
|---|---|---|---|
| ASSEMBLED BY : A. SMITH | | DATE : 7/18 | |
| CHECKED BY : E. JOWZA | | DATE : 9/18 | |
| DRAWN BY : REK 9/87 | REV. 7/12 | MAA/GM | |
| CHECKED BY : CRK 10/87 | REV. 6/13 | MAA/GM | |
| | REV. 12/17 | MAA/THC | |

DOCUMENT NOT CONSIDERED FINAL UNLESS ALL SIGNATURES COMPLETED

HNTB NORTH CAROLINA, P.C.
NC License No. C-1554
343 E. Six Forks Rd., Suite 200, Raleigh, N.C. 27609

DRAWN BY A. SMITH DATE 7/18
CHECKED BY E. JOWZA DATE 9/18
DESIGN ENGINEER OF RECORD J. GREGG DATE 10/18

DWG. NO. 27

REVISIONS

| NO. | BY | DATE | NO. | BY | DATE |
|---|---|---|---|---|---|
| 1 | | | 3 | | |
| 2 | | | 4 | | |

SHEET NO. S04-27

TOTAL SHEETS 46

STD. NO. EJS2

DocuSign Envelope ID: 88A0B777-7A2E-445F-ADAD-2E515F175E6D

## BILL OF MATERIAL

EPOXY COATED REINFORCING STEEL

| BAR | NO. | SIZE | TYPE | LENGTH | WEIGHT (LBS.) |
|---|---|---|---|---|---|
| ✳ A1 | 627 | 6 | STR | 42'-11" | 40,417 |
| ✳ A2 | 1 | 6 | STR | 42'-8" | 64 |
| ✳ A3 | 1 | 6 | STR | 42'-2" | 63 |
| ✳ A4 | 1 | 6 | STR | 41'-9" | 63 |
| ✳ A5 | 1 | 6 | STR | 41'-4" | 62 |
| ✳ A6 | 1 | 6 | STR | 40'-11" | 61 |
| ✳ A7 | 1 | 6 | STR | 40'-6" | 61 |
| ✳ A8 | 1 | 6 | STR | 40'-1" | 60 |
| ✳ A9 | 1 | 6 | STR | 39'-8" | 60 |
| ✳ A10 | 1 | 6 | STR | 39'-3" | 59 |
| ✳ A11 | 1 | 6 | STR | 38'-9" | 58 |
| ✳ A12 | 1 | 6 | STR | 38'-4" | 58 |
| ✳ A13 | 1 | 6 | STR | 37'-11" | 57 |
| ✳ A14 | 1 | 6 | STR | 37'-6" | 56 |
| ✳ A15 | 1 | 6 | STR | 37'-1" | 56 |
| ✳ A16 | 1 | 6 | STR | 36'-8" | 55 |
| ✳ A17 | 1 | 6 | STR | 36'-3 | 54 |
| ✳ A18 | 1 | 6 | STR | 35'-10" | 54 |
| ✳ A19 | 1 | 6 | STR | 35'-5" | 53 |
| ✳ A20 | 1 | 6 | STR | 34'-11" | 52 |
| ✳ A21 | 1 | 6 | STR | 34'-6" | 52 |
| ✳ A22 | 1 | 6 | STR | 34'-1" | 51 |
| ✳ A23 | 1 | 6 | STR | 33'-8" | 51 |
| ✳ A24 | 1 | 6 | STR | 33'-3" | 50 |
| ✳ A25 | 1 | 6 | STR | 32'-10" | 49 |
| ✳ A26 | 1 | 6 | STR | 32'-5" | 49 |
| ✳ A27 | 1 | 6 | STR | 32'-0" | 48 |
| ✳ A28 | 1 | 6 | STR | 31'-6" | 47 |
| ✳ A29 | 1 | 6 | STR | 31'-1" | 47 |
| ✳ A30 | 1 | 6 | STR | 30'-8" | 46 |
| ✳ A31 | 1 | 6 | STR | 30'-3" | 45 |
| ✳ A32 | 1 | 6 | STR | 29'-10" | 45 |
| ✳ A33 | 1 | 6 | STR | 29'-5" | 44 |
| ✳ A34 | 1 | 6 | STR | 29'-0" | 44 |
| ✳ A35 | 1 | 6 | STR | 28'-7" | 43 |
| ✳ A36 | 1 | 6 | STR | 28'-2" | 42 |
| ✳ A37 | 1 | 6 | STR | 27'-8" | 42 |
| ✳ A38 | 1 | 6 | STR | 27'-3" | 41 |
| ✳ A39 | 1 | 6 | STR | 26'-10" | 40 |
| ✳ A40 | 1 | 6 | STR | 26'-5" | 40 |
| ✳ A41 | 1 | 6 | STR | 26'-0" | 39 |
| ✳ A42 | 1 | 6 | STR | 25'-7" | 38 |
| ✳ A43 | 1 | 6 | STR | 25'-2" | 38 |
| ✳ A44 | 1 | 6 | STR | 24'-9" | 37 |
| ✳ A45 | 1 | 6 | STR | 24'-3" | 36 |
| ✳ A46 | 1 | 6 | STR | 23'-10" | 36 |
| ✳ A47 | 1 | 6 | STR | 23'-5" | 35 |
| ✳ A48 | 1 | 6 | STR | 23'-0" | 35 |
| ✳ A49 | 1 | 6 | STR | 22'-7" | 34 |
| ✳ A50 | 1 | 6 | STR | 22'-2" | 33 |
| ✳ A51 | 1 | 6 | STR | 21'-9" | 33 |
| ✳ A52 | 1 | 6 | STR | 21'-4" | 32 |
| ✳ A53 | 1 | 6 | STR | 20'-11" | 31 |
| ✳ A54 | 1 | 6 | STR | 20'-5" | 31 |
| ✳ A55 | 1 | 6 | STR | 20'-0" | 30 |
| ✳ A56 | 1 | 6 | STR | 19'-7" | 29 |
| ✳ A57 | 1 | 6 | STR | 19'-2" | 29 |
| ✳ A58 | 1 | 6 | STR | 18'-9" | 28 |
| ✳ A59 | 1 | 6 | STR | 18'-4" | 28 |
| ✳ A60 | 1 | 6 | STR | 17'-11" | 27 |
| ✳ A61 | 1 | 6 | STR | 17'-6" | 26 |
| ✳ A62 | 1 | 6 | STR | 17'-0" | 26 |
| ✳ A63 | 1 | 6 | STR | 16'-7" | 25 |
| ✳ A64 | 1 | 6 | STR | 16'-2" | 24 |
| ✳ A65 | 1 | 6 | STR | 15'-9" | 24 |
| ✳ A66 | 1 | 6 | STR | 15'-4" | 23 |
| ✳ A67 | 1 | 6 | STR | 14'-11" | 22 |
| ✳ A68 | 1 | 6 | STR | 14'-6" | 22 |
| ✳ A69 | 1 | 6 | STR | 14'-1" | 21 |
| ✳ A70 | 1 | 6 | STR | 13'-8" | 21 |
| ✳ A71 | 1 | 6 | STR | 13-2" | 20 |
| ✳ A72 | 1 | 6 | STR | 12'-9" | 19 |
| ✳ A73 | 1 | 6 | STR | 12'-4" | 19 |

## BILL OF MATERIAL

EPOXY COATED REINFORCING STEEL

| BAR | NO. | SIZE | TYPE | LENGTH | WEIGHT (LBS.) |
|---|---|---|---|---|---|
| ✳ A74 | 1 | 6 | STR | 11'-11" | 18 |
| ✳ A75 | 1 | 6 | STR | 11'-6" | 17 |
| ✳ A76 | 1 | 6 | STR | 11'-1" | 17 |
| ✳ A77 | 1 | 6 | STR | 10'-8" | 16 |
| ✳ A78 | 1 | 6 | STR | 10'-3" | 15 |
| ✳ A79 | 1 | 6 | STR | 9'-10" | 15 |
| ✳ A80 | 1 | 6 | STR | 9'-4" | 14 |
| ✳ A81 | 1 | 6 | STR | 8'-11" | 13 |
| ✳ A82 | 1 | 6 | STR | 8'-6" | 13 |
| ✳ A83 | 1 | 6 | STR | 8'-1" | 12 |
| ✳ A84 | 1 | 6 | STR | 7'-8" | 12 |
| ✳ A85 | 1 | 6 | STR | 7'-3" | 11 |
| ✳ A86 | 1 | 6 | STR | 6'-10" | 10 |
| ✳ A87 | 1 | 6 | STR | 6'-5" | 10 |
| ✳ A88 | 1 | 6 | STR | 5'-11" | 9 |
| ✳ A89 | 1 | 6 | STR | 5'-6" | 8 |
| ✳ A90 | 1 | 6 | STR | 5'-1" | 8 |
| ✳ A91 | 1 | 6 | STR | 4'-8" | 7 |
| ✳ A92 | 1 | 6 | STR | 4'-3" | 6 |
| ✳ A93 | 1 | 6 | STR | 3'-10" | 6 |
| ✳ A94 | 1 | 6 | STR | 3'-5" | 5 |
| ✳ A95 | 1 | 6 | STR | 3'-0" | 5 |
| ✳ A96 | 1 | 6 | STR | 2'-7" | 4 |
| ✳ A97 | 1 | 6 | STR | 42'-7" | 64 |
| ✳ A98 | 1 | 6 | STR | 42'-2" | 63 |
| ✳ A99 | 1 | 6 | STR | 41'-9" | 63 |
| ✳ A100 | 1 | 6 | STR | 41'-4" | 62 |
| ✳ A101 | 1 | 6 | STR | 41'-0" | 62 |
| ✳ A102 | 1 | 6 | STR | 40'-7" | 61 |
| ✳ A103 | 1 | 6 | STR | 40'-2" | 60 |
| ✳ A104 | 1 | 6 | STR | 39'-9" | 60 |
| ✳ A105 | 1 | 6 | STR | 39'-5" | 59 |
| ✳ A106 | 1 | 6 | STR | 39'-0" | 59 |
| ✳ A107 | 1 | 6 | STR | 38'-7" | 58 |
| ✳ A108 | 1 | 6 | STR | 38'-3" | 57 |
| ✳ A109 | 1 | 6 | STR | 37'-10" | 57 |
| ✳ A110 | 1 | 6 | STR | 37'-5" | 56 |
| ✳ A111 | 1 | 6 | STR | 37'-0" | 56 |
| ✳ A112 | 1 | 6 | STR | 36'-8" | 55 |
| ✳ A113 | 1 | 6 | STR | 36'-3" | 54 |
| ✳ A114 | 1 | 6 | STR | 35'-10" | 54 |
| ✳ A115 | 1 | 6 | STR | 35'-5" | 53 |
| ✳ A116 | 1 | 6 | STR | 35'-1" | 53 |
| ✳ A117 | 1 | 6 | STR | 34'-8" | 52 |
| ✳ A118 | 1 | 6 | STR | 34'-3" | 51 |
| ✳ A119 | 1 | 6 | STR | 33'-11" | 51 |
| ✳ A120 | 1 | 6 | STR | 33'-6" | 50 |
| ✳ A121 | 1 | 6 | STR | 33'-1" | 50 |
| ✳ A122 | 1 | 6 | STR | 32'-8" | 49 |
| ✳ A123 | 1 | 6 | STR | 32'-4" | 49 |
| ✳ A124 | 1 | 6 | STR | 31'-11" | 48 |
| ✳ A125 | 1 | 6 | STR | 31'-6" | 47 |
| ✳ A126 | 1 | 6 | STR | 31'-1" | 47 |
| ✳ A127 | 1 | 6 | STR | 30'-9" | 46 |
| ✳ A128 | 1 | 6 | STR | 30'-4" | 46 |
| ✳ A129 | 1 | 6 | STR | 29'-11" | 45 |
| ✳ A130 | 1 | 6 | STR | 29'-7" | 44 |
| ✳ A131 | 1 | 6 | STR | 29'-2" | 44 |
| ✳ A132 | 1 | 6 | STR | 28'-9" | 43 |
| ✳ A133 | 1 | 6 | STR | 28'-4" | 43 |
| ✳ A134 | 1 | 6 | STR | 28'-0" | 42 |
| ✳ A135 | 1 | 6 | STR | 27'-7" | 41 |
| ✳ A136 | 1 | 6 | STR | 27'-2" | 41 |
| ✳ A137 | 1 | 6 | STR | 26'-9" | 40 |
| ✳ A138 | 1 | 6 | STR | 26'-5" | 40 |
| ✳ A139 | 1 | 6 | STR | 26'-0" | 39 |
| ✳ A140 | 1 | 6 | STR | 25'-7" | 38 |
| ✳ A141 | 1 | 6 | STR | 25'-3" | 38 |
| ✳ A142 | 1 | 6 | STR | 24'-10" | 37 |
| ✳ A143 | 1 | 6 | STR | 24'-5" | 37 |
| ✳ A144 | 1 | 6 | STR | 24'-0" | 36 |
| ✳ A145 | 1 | 6 | STR | 23'-8" | 36 |
| ✳ A146 | 1 | 6 | STR | 23'-3" | 35 |
| ✳ A147 | 1 | 6 | STR | 22'-10" | 34 |
| ✳ A148 | 1 | 6 | STR | 22'-6" | 34 |
| ✳ A149 | 1 | 6 | STR | 22'-1" | 33 |

## BILL OF MATERIAL

EPOXY COATED REINFORCING STEEL

| BAR | NO. | SIZE | TYPE | LENGTH | WEIGHT (LBS.) |
|---|---|---|---|---|---|
| ✳ A150 | 1 | 6 | STR | 21'-8" | 33 |
| ✳ A151 | 1 | 6 | STR | 21'-3" | 32 |
| ✳ A152 | 1 | 6 | STR | 20'-11" | 31 |
| ✳ A153 | 1 | 6 | STR | 20'-6" | 31 |
| ✳ A154 | 1 | 6 | STR | 20'-1" | 30 |
| ✳ A155 | 1 | 6 | STR | 19'-8" | 30 |
| ✳ A156 | 1 | 6 | STR | 19'-4" | 29 |
| ✳ A157 | 1 | 6 | STR | 18'-11" | 28 |
| ✳ A158 | 1 | 6 | STR | 18'-6" | 28 |
| ✳ A159 | 1 | 6 | STR | 18'-2" | 27 |
| ✳ A160 | 1 | 6 | STR | 17'-9" | 27 |
| ✳ A161 | 1 | 6 | STR | 17'-4" | 26 |
| ✳ A162 | 1 | 6 | STR | 16'-11" | 25 |
| ✳ A163 | 1 | 6 | STR | 16'-7" | 25 |
| ✳ A164 | 1 | 6 | STR | 16'-2" | 24 |
| ✳ A165 | 1 | 6 | STR | 15'-9" | 24 |
| ✳ A166 | 1 | 6 | STR | 15'-4" | 23 |
| ✳ A167 | 1 | 6 | STR | 15'-0" | 23 |
| ✳ A168 | 1 | 6 | STR | 14'-7" | 22 |
| ✳ A169 | 1 | 6 | STR | 14'-2" | 21 |
| ✳ A170 | 1 | 6 | STR | 13'-10" | 21 |
| ✳ A171 | 1 | 6 | STR | 13'-5" | 20 |
| ✳ A172 | 1 | 6 | STR | 13'-0" | 20 |
| ✳ A173 | 1 | 6 | STR | 12'-7" | 19 |
| ✳ A174 | 1 | 6 | STR | 12'-3" | 18 |
| ✳ A175 | 1 | 6 | STR | 11'-10" | 18 |
| ✳ A176 | 1 | 6 | STR | 11'-5" | 17 |
| ✳ A177 | 1 | 6 | STR | 11'-0" | 17 |
| ✳ A178 | 1 | 6 | STR | 10'-8" | 16 |
| ✳ A179 | 1 | 6 | STR | 10'-3" | 15 |
| ✳ A180 | 1 | 6 | STR | 9'-10" | 15 |
| ✳ A181 | 1 | 6 | STR | 9'-6" | 14 |
| ✳ A182 | 1 | 6 | STR | 9'-1" | 14 |
| ✳ A183 | 1 | 6 | STR | 8'-8" | 13 |
| ✳ A184 | 1 | 6 | STR | 8'-3" | 12 |
| ✳ A185 | 1 | 6 | STR | 7'-11" | 12 |
| ✳ A186 | 1 | 6 | STR | 7'-6" | 11 |
| ✳ A187 | 1 | 6 | STR | 7'-1" | 11 |
| ✳ A188 | 1 | 6 | STR | 6'-8" | 10 |
| ✳ A189 | 1 | 6 | STR | 6'-4" | 10 |
| ✳ A190 | 1 | 6 | STR | 5'-11" | 9 |
| ✳ A191 | 1 | 6 | STR | 5'-6" | 8 |
| ✳ A192 | 1 | 6 | STR | 5'-2" | 8 |
| ✳ A193 | 1 | 6 | STR | 4'-9" | 7 |
| ✳ A194 | 1 | 6 | STR | 4'-4" | 7 |
| ✳ A195 | 1 | 6 | STR | 3'-11" | 6 |
| ✳ A196 | 1 | 6 | STR | 3'-7" | 5 |
| ✳ A197 | 1 | 6 | STR | 3'-2" | 5 |
| ✳ A198 | 1 | 6 | STR | 2'-9" | 4 |
| ✳ A199 | 1 | 6 | STR | 2'-5" | 4 |
| ✳ A200 | 6 | 6 | STR | 28'-5" | 256 |
| | | | | | |
| ✳ B1 | 93 | 4 | STR | 25'-2" | 1,563 |
| ✳ B2 | 155 | 4 | STR | 25'-0" | 2,589 |
| ✳ B3 | 93 | 4 | STR | 25'-10" | 1,605 |
| ✳ B4 | 93 | 4 | STR | 23'-10" | 1,481 |
| ✳ B5 | 87 | 6 | STR | 18'-4" | 2,396 |
| ✳ B6 | 87 | 6 | STR | 18-10" | 2,461 |
| ✳ B7 | 87 | 6 | STR | 15'-10" | 2,069 |
| | | | | | |
| ✳ G1 | 2 | 5 | STR | 33'-11" | 71 |
| ✳ G2 | 2 | 5 | STR | 36'-7" | 76 |
| | | | | | |
| ✳ J1 | 125 | 4 | 4 | 1'-5" | 118 |
| | | | | | |
| ✳ K1 | 2 | 8 | 1 | 21'-0" | 112 |
| ✳ K2 | 4 | 8 | 2 | 29'-1" | 311 |
| ✳ K3 | 2 | 8 | 1 | 19'-2" | 102 |
| | | | | | |
| ✳ K5 | 2 | 8 | 1 | 21'-8" | 116 |
| ✳ K6 | 4 | 8 | 2 | 30'-0" | 320 |
| ✳ K7 | 2 | 8 | 1 | 22'-4" | 119 |
| | | | | | |
| ✳ S1 | 72 | 5 | 3 | 5'-8" | 426 |
| ✳ S2 | 72 | 4 | 5 | 7'-2" | 345 |
| EPOXY COATED REINFORCING STEEL TOTAL: | | | | | 63,654 |

## BAR TYPES

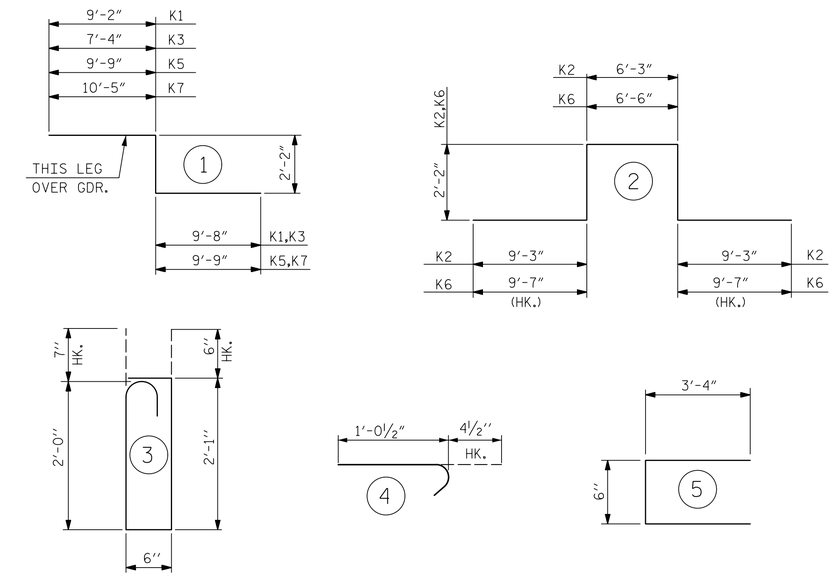


ALL BAR DIMENSIONS ARE OUT TO OUT

## SUPERSTRUCTURE BILL OF MATERIAL

| | CLASS AA CONCRETE | REINFORCING STEEL | EPOXY COATED REINFORCING STEEL |
|---|---|---|---|
| | ( CU. YDS. ) | ( LBS. ) | ( LBS. ) |
| POUR 1 | 100.0 | 57,955 | 63,654 |
| POUR 2 | 124.8 | | |
| POUR 3 | 192.3 | | |
| POUR 4 | 132.6 | | |
| TOTALS✳✳ | 549.7 | 57,955 | 63,654 |

✳✳ QUANTITIES FOR BARRIER RAIL ARE NOT INCLUDED. CONCRETE IN CLOSURE POUR AT SLAB EXPANSION JOINTS IS INCLUDED IN THE ADJACENT POUR QUANTITY.

## SUPERSTRUCTURE REINFORCING STEEL LENGTHS ARE BASED ON THE FOLLOWING MINIMUM SPLICE LENGTHS

| BAR SIZE | SUPERSTRUCTURE EXCEPT APPROACH SLABS, PARAPET, AND BARRIER RAIL | | APPROACH SLABS | | PARAPET AND BARRIER RAIL |
|---|---|---|---|---|---|
| | EPOXY COATED | UNCOATED | EPOXY COATED | UNCOATED | |
| #4 | 2'-0" | 1'-9" | 2'-0" | 1'-9" | 2'-9" |
| #5 | 2'-5" | 2'-0" | 2'-6" | 2'-2" | 3'-5" |
| #6 | 3'-0" | 2'-5" | 3'-10" | 2'-7" | 4'-4" |

PROJECT NO. R-1015

CRAVEN COUNTY

STATION: POC STA. 138+31.09 -L-

SHEET 1 OF 2

STATE OF NORTH CAROLINA
DEPARTMENT OF TRANSPORTATION
RALEIGH

STANDARD
SUPERSTRUCTURE
BILL OF MATERIAL
RIGHT LANE

DocuSigned by: D. Lawrence 12/6/2018
NORTH CAROLINA PROFESSIONAL SEAL 046632 ENGINEER JAMES P. GREGG

12/6/2018

HNTB NORTH CAROLINA, P.C.
NC License No. C-1554
343 E. Six Forks Rd., Suite 200, Raleigh, N.C. 27609

DRAWN BY A. SMITH DATE 7/18
CHECKED BY D. LAWRENCE DATE 10/18
DESIGN ENGINEER OF RECORD J. GREGG DATE 10/18

DWG. NO. 28

| REVISIONS | | | | | | SHEET NO. |
|---|---|---|---|---|---|---|
| NO. | BY | DATE | NO. | BY | DATE | S04-28 |
| 1 | | | 3 | | | TOTAL SHEETS |
| 2 | | | 4 | | | 46 |

STD. NO. BOM2

ASSEMBLED BY : A. SMITH DATE : 7/18
CHECKED BY : D. LAWRENCE DATE : 10/18

DRAWN BY : JMB 5/87
CHECKED BY : SJD 9/87

REV. 8/16/99 RWW/LES
REV. 5/1/06 TLA/GM
REV. 10/1/11 MAA/GM

DOCUMENT NOT CONSIDERED FINAL UNLESS ALL SIGNATURES COMPLETED

DocuSign Envelope ID: 88A0B777-7A2E-445F-ADAD-2E515F175E6D

## BILL OF MATERIAL

UNCOATED REINFORCING STEEL

| BAR | NO. | SIZE | TYPE | LENGTH | WEIGHT (LBS.) |
|---|---|---|---|---|---|
| A201 | 627 | 5 | STR | 42'-11" | 28,066 |
| A202 | 1 | 5 | STR | 42'-8" | 45 |
| A203 | 1 | 5 | STR | 42'-2" | 44 |
| A204 | 1 | 5 | STR | 41'-9" | 44 |
| A205 | 1 | 5 | STR | 41'-4" | 43 |
| A206 | 1 | 5 | STR | 40'-11" | 43 |
| A207 | 1 | 5 | STR | 40'-6" | 42 |
| A208 | 1 | 5 | STR | 40'-1" | 42 |
| A209 | 1 | 5 | STR | 39'-8" | 41 |
| A210 | 1 | 5 | STR | 39'-3" | 41 |
| A211 | 1 | 5 | STR | 38'-9" | 40 |
| A212 | 1 | 5 | STR | 38'-4" | 40 |
| A213 | 1 | 5 | STR | 37'-11" | 40 |
| A214 | 1 | 5 | STR | 37'-6" | 39 |
| A215 | 1 | 5 | STR | 37'-1" | 39 |
| A216 | 1 | 5 | STR | 36'-8" | 38 |
| A217 | 1 | 5 | STR | 36'-3" | 38 |
| A218 | 1 | 5 | STR | 35'-10" | 37 |
| A219 | 1 | 5 | STR | 35'-5" | 37 |
| A220 | 1 | 5 | STR | 34'-11" | 36 |
| A221 | 1 | 5 | STR | 34'-6" | 36 |
| A222 | 1 | 5 | STR | 34'-1" | 36 |
| A223 | 1 | 5 | STR | 33'-8" | 35 |
| A224 | 1 | 5 | STR | 33'-3" | 35 |
| A225 | 1 | 5 | STR | 32'-10" | 34 |
| A226 | 1 | 5 | STR | 32'-5" | 34 |
| A227 | 1 | 5 | STR | 32'-0" | 33 |
| A228 | 1 | 5 | STR | 31'-6" | 33 |
| A229 | 1 | 5 | STR | 31'-1" | 32 |
| A230 | 1 | 5 | STR | 30'-8" | 32 |
| A231 | 1 | 5 | STR | 30'-3" | 32 |
| A232 | 1 | 5 | STR | 29'-10" | 31 |
| A233 | 1 | 5 | STR | 29'-5" | 31 |
| A234 | 1 | 5 | STR | 29'-0" | 30 |
| A235 | 1 | 5 | STR | 28'-7" | 30 |
| A236 | 1 | 5 | STR | 28'-2" | 29 |
| A237 | 1 | 5 | STR | 27'-8" | 29 |
| A238 | 1 | 5 | STR | 27'-3" | 28 |
| A239 | 1 | 5 | STR | 26'-10" | 28 |
| A240 | 1 | 5 | STR | 26'-5" | 28 |
| A241 | 1 | 5 | STR | 26'-0" | 27 |
| A242 | 1 | 5 | STR | 25'-7" | 27 |
| A243 | 1 | 5 | STR | 25'-2" | 26 |
| A244 | 1 | 5 | STR | 24'-9" | 26 |
| A245 | 1 | 5 | STR | 24'-3" | 25 |
| A246 | 1 | 5 | STR | 23'-10" | 25 |
| A247 | 1 | 5 | STR | 23'-5" | 24 |
| A248 | 1 | 5 | STR | 23'-0" | 24 |
| A249 | 1 | 5 | STR | 22'-7" | 24 |
| A250 | 1 | 5 | STR | 22'-2" | 23 |
| A251 | 1 | 5 | STR | 21'-9" | 23 |
| A252 | 1 | 5 | STR | 21'-4" | 22 |
| A253 | 1 | 5 | STR | 20'-11" | 22 |
| A254 | 1 | 5 | STR | 20'-5" | 21 |
| A255 | 1 | 5 | STR | 20'-0" | 21 |
| A256 | 1 | 5 | STR | 19'-7" | 20 |
| A257 | 1 | 5 | STR | 19'-2" | 20 |
| A258 | 1 | 5 | STR | 18'-9" | 20 |
| A259 | 1 | 5 | STR | 18'-4" | 19 |
| A260 | 1 | 5 | STR | 17'-11" | 19 |
| A261 | 1 | 5 | STR | 17'-6" | 18 |
| A262 | 1 | 5 | STR | 17'-0" | 18 |
| A263 | 1 | 5 | STR | 16'-7" | 17 |
| A264 | 1 | 5 | STR | 16'-2" | 17 |
| A265 | 1 | 5 | STR | 15'-9" | 16 |
| A266 | 1 | 5 | STR | 15'-4" | 16 |
| A267 | 1 | 5 | STR | 14'-11" | 16 |
| A268 | 1 | 5 | STR | 14'-6" | 15 |
| A269 | 1 | 5 | STR | 14'-1" | 15 |
| A270 | 1 | 5 | STR | 13'-8" | 14 |
| A271 | 1 | 5 | STR | 13'-2" | 14 |
| A272 | 1 | 5 | STR | 12'-9" | 13 |
| A273 | 1 | 5 | STR | 12'-4" | 13 |

## BILL OF MATERIAL

UNCOATED REINFORCING STEEL

| BAR | NO. | SIZE | TYPE | LENGTH | WEIGHT (LBS.) |
|---|---|---|---|---|---|
| A274 | 1 | 5 | STR | 11'-11" | 12 |
| A275 | 1 | 5 | STR | 11'-6" | 12 |
| A276 | 1 | 5 | STR | 11'-1" | 12 |
| A277 | 1 | 5 | STR | 10'-8" | 11 |
| A278 | 1 | 5 | STR | 10'-3" | 11 |
| A279 | 1 | 5 | STR | 9'-10" | 10 |
| A280 | 1 | 5 | STR | 9'-4" | 10 |
| A281 | 1 | 5 | STR | 8'-11" | 9 |
| A282 | 1 | 5 | STR | 8'-6" | 9 |
| A283 | 1 | 5 | STR | 8'-1" | 8 |
| A284 | 1 | 5 | STR | 7'-8" | 8 |
| A285 | 1 | 5 | STR | 7'-3" | 8 |
| A286 | 1 | 5 | STR | 6'-10" | 7 |
| A287 | 1 | 5 | STR | 6'-5" | 7 |
| A288 | 1 | 5 | STR | 5'-11" | 6 |
| A289 | 1 | 5 | STR | 5'-6" | 6 |
| A290 | 1 | 5 | STR | 5'-1" | 5 |
| A291 | 1 | 5 | STR | 4'-8" | 5 |
| A292 | 1 | 5 | STR | 4'-3" | 4 |
| A293 | 1 | 5 | STR | 3'-10" | 4 |
| A294 | 1 | 5 | STR | 3'-5" | 4 |
| A295 | 1 | 5 | STR | 3'-0" | 3 |
| A296 | 1 | 5 | STR | 2'-7" | 3 |
| A297 | 1 | 5 | STR | 42'-7" | 44 |
| A298 | 1 | 5 | STR | 42'-2" | 44 |
| A299 | 1 | 5 | STR | 41'-9" | 44 |
| A300 | 1 | 5 | STR | 41'-4" | 43 |
| A301 | 1 | 5 | STR | 41'-0" | 43 |
| A302 | 1 | 5 | STR | 40'-7" | 42 |
| A303 | 1 | 5 | STR | 40'-2" | 42 |
| A304 | 1 | 5 | STR | 39'-9" | 41 |
| A305 | 1 | 5 | STR | 39'-5" | 41 |
| A306 | 1 | 5 | STR | 39'-0" | 41 |
| A307 | 1 | 5 | STR | 38'-7" | 40 |
| A308 | 1 | 5 | STR | 38'-3" | 40 |
| A309 | 1 | 5 | STR | 37'-10" | 39 |
| A310 | 1 | 5 | STR | 37'-5" | 39 |
| A311 | 1 | 5 | STR | 37'-0" | 39 |
| A312 | 1 | 5 | STR | 36'-8" | 38 |
| A313 | 1 | 5 | STR | 36'-3" | 38 |
| A314 | 1 | 5 | STR | 35'-10" | 37 |
| A315 | 1 | 5 | STR | 35'-5" | 37 |
| A316 | 1 | 5 | STR | 35'-1" | 37 |
| A317 | 1 | 5 | STR | 34'-8" | 36 |
| A318 | 1 | 5 | STR | 34'-3" | 36 |
| A319 | 1 | 5 | STR | 33'-11" | 35 |
| A320 | 1 | 5 | STR | 33'-6" | 35 |
| A321 | 1 | 5 | STR | 33'-1" | 35 |
| A322 | 1 | 5 | STR | 32'-8" | 34 |
| A323 | 1 | 5 | STR | 32'-4" | 34 |
| A324 | 1 | 5 | STR | 31'-11" | 33 |
| A325 | 1 | 5 | STR | 31'-6" | 33 |
| A326 | 1 | 5 | STR | 31'-1" | 32 |
| A327 | 1 | 5 | STR | 30'-9" | 32 |
| A328 | 1 | 5 | STR | 30'-4" | 32 |
| A329 | 1 | 5 | STR | 29'-11" | 31 |
| A330 | 1 | 5 | STR | 29'-7" | 31 |
| A331 | 1 | 5 | STR | 29'-2" | 30 |
| A332 | 1 | 5 | STR | 28'-9" | 30 |
| A333 | 1 | 5 | STR | 28'-4" | 30 |
| A334 | 1 | 5 | STR | 28'-0" | 29 |
| A335 | 1 | 5 | STR | 27'-7" | 29 |
| A336 | 1 | 5 | STR | 27'-2" | 28 |
| A337 | 1 | 5 | STR | 26'-9" | 28 |
| A338 | 1 | 5 | STR | 26'-5" | 28 |
| A339 | 1 | 5 | STR | 26'-0" | 27 |
| A340 | 1 | 5 | STR | 25'-7" | 27 |
| A341 | 1 | 5 | STR | 25'-3" | 26 |
| A342 | 1 | 5 | STR | 24'-10" | 26 |
| A343 | 1 | 5 | STR | 24'-5" | 25 |
| A344 | 1 | 5 | STR | 24'-0" | 25 |
| A345 | 1 | 5 | STR | 23'-8" | 25 |
| A346 | 1 | 5 | STR | 23'-3" | 24 |
| A347 | 1 | 5 | STR | 22'-10" | 24 |
| A348 | 1 | 5 | STR | 22'-6" | 23 |

## BILL OF MATERIAL

UNCOATED REINFORCING STEEL

| BAR | NO. | SIZE | TYPE | LENGTH | WEIGHT (LBS.) |
|---|---|---|---|---|---|
| A349 | 1 | 5 | STR | 22'-1" | 23 |
| A350 | 1 | 5 | STR | 21'-8" | 23 |
| A351 | 1 | 5 | STR | 21'-3" | 22 |
| A352 | 1 | 5 | STR | 20'-11" | 22 |
| A353 | 1 | 5 | STR | 20'-6" | 21 |
| A354 | 1 | 5 | STR | 20'-1" | 21 |
| A355 | 1 | 5 | STR | 19'-8" | 21 |
| A356 | 1 | 5 | STR | 19'-4" | 20 |
| A357 | 1 | 5 | STR | 18'-11" | 20 |
| A358 | 1 | 5 | STR | 18'-6" | 19 |
| A359 | 1 | 5 | STR | 18'-2" | 19 |
| A360 | 1 | 5 | STR | 17'-9" | 19 |
| A361 | 1 | 5 | STR | 17'-4" | 18 |
| A362 | 1 | 5 | STR | 16'-11" | 18 |
| A363 | 1 | 5 | STR | 16'-7" | 17 |
| A364 | 1 | 5 | STR | 16'-2" | 17 |
| A365 | 1 | 5 | STR | 15'-9" | 16 |
| A366 | 1 | 5 | STR | 15'-4" | 16 |
| A367 | 1 | 5 | STR | 15'-0" | 16 |
| A368 | 1 | 5 | STR | 14'-7" | 15 |
| A369 | 1 | 5 | STR | 14'-2" | 15 |
| A370 | 1 | 5 | STR | 13'-10" | 14 |
| A371 | 1 | 5 | STR | 13'-5" | 14 |
| A372 | 1 | 5 | STR | 13'-0" | 14 |
| A373 | 1 | 5 | STR | 12'-7" | 13 |
| A374 | 1 | 5 | STR | 12'-3" | 13 |
| A375 | 1 | 5 | STR | 11'-10" | 12 |
| A376 | 1 | 5 | STR | 11'-5" | 12 |
| A377 | 1 | 5 | STR | 11'-0" | 11 |
| A378 | 1 | 5 | STR | 10'-8" | 11 |
| A379 | 1 | 5 | STR | 10'-3" | 11 |
| A380 | 1 | 5 | STR | 9'-10" | 10 |
| A381 | 1 | 5 | STR | 9'-6" | 10 |
| A382 | 1 | 5 | STR | 9'-1" | 9 |
| A383 | 1 | 5 | STR | 8'-8" | 9 |
| A384 | 1 | 5 | STR | 8'-3" | 9 |
| A385 | 1 | 5 | STR | 7'-11" | 8 |
| A386 | 1 | 5 | STR | 7'-6" | 8 |
| A387 | 1 | 5 | STR | 7'-1" | 7 |
| A388 | 1 | 5 | STR | 6'-8" | 7 |
| A389 | 1 | 5 | STR | 6'-4" | 7 |
| A390 | 1 | 5 | STR | 5'-11" | 6 |
| A391 | 1 | 5 | STR | 5'-6" | 6 |
| A392 | 1 | 5 | STR | 5'-2" | 5 |
| A393 | 1 | 5 | STR | 4'-9" | 5 |
| A394 | 1 | 5 | STR | 4'-4" | 5 |
| A395 | 1 | 5 | STR | 3'-11" | 4 |
| A396 | 1 | 5 | STR | 3'-7" | 4 |
| A397 | 1 | 5 | STR | 3'-2" | 3 |
| A398 | 1 | 5 | STR | 2'-9" | 3 |
| A399 | 1 | 5 | STR | 2'-5" | 3 |
| | | | | | |
| B101 | 98 | 5 | STR | 36'-7" | 3,739 |
| B102 | 98 | 5 | STR | 59'-1" | 6,039 |
| B103 | 98 | 5 | STR | 37'-7" | 3,842 |
| B104 | 98 | 5 | STR | 34'-8" | 3,543 |
| B105 | 87 | 6 | STR | 18'-4" | 2,396 |
| B106 | 87 | 6 | STR | 18'-10" | 2,461 |
| B107 | 87 | 6 | STR | 15'-10" | 2,069 |
| | | | | | |
| K4 | 8 | 6 | STR | 33'-11" | 408 |
| K8 | 8 | 6 | STR | 36'-7" | 440 |
| K9 | 12 | 6 | STR | 16'-8" | 300 |
| | | | | | |
| | | | | REINFORCING STEEL TOTAL: | 57,955 |

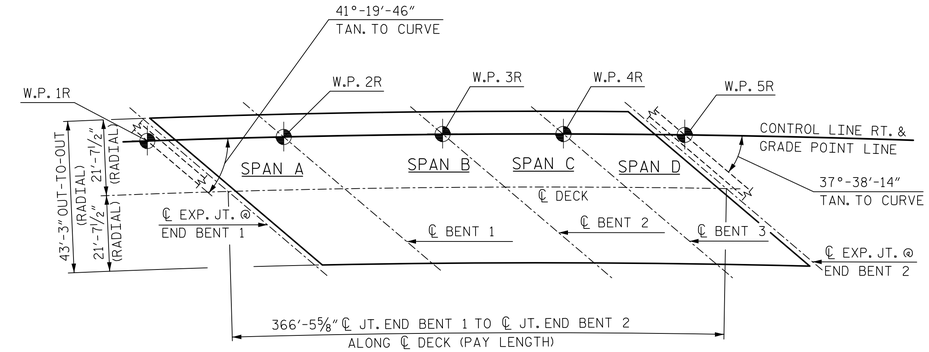


## LAYOUT FOR COMPUTING AREA REINFORCED CONCRETE DECK SLAB
( SQ. FT. = 15,842 )

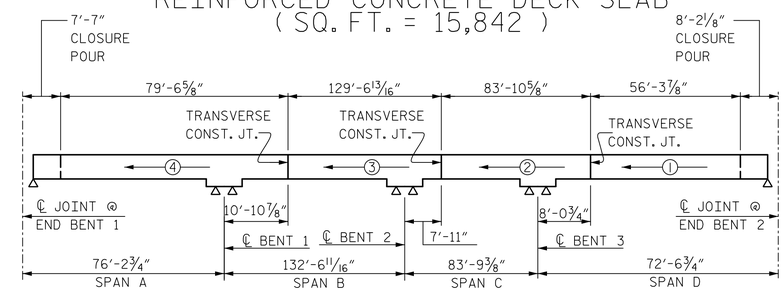


NOTE: ALL DIMENSIONS ARE ALONG CONTROL LINE AND ARE ARC DIMENSIONS.

## POURING SEQUENCE

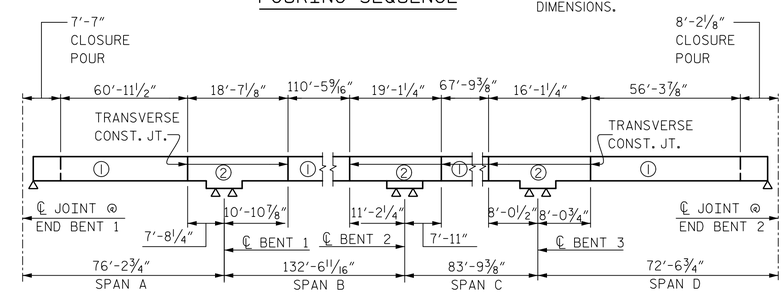


NOTE: ALL DIMENSIONS ARE ALONG CONTROL LINE AND ARE ARC DIMENSIONS.

## OPTIONAL POURING SEQUENCE

NOTE: POUR ② CAN NOT BE STARTED UNTIL BOTH ADJACENT ① POURS REACH A MINIMUM OF 3000 PSI

| GROOVING BRIDGE FLOORS | | |
|---|---|---|
| APPROACH SLABS | 1,798 | SQ.FT. |
| BRIDGE DECK | 13,494 | SQ.FT. |
| TOTAL | 15,292 | SQ.FT. |

PROJECT NO. R-1015

CRAVEN COUNTY

STATION: POC STA. 138+31.09 -L-

SHEET 2 OF 2

DocuSigned by: P. 61-08
NORTH CAROLINA PROFESSIONAL SEAL 046632 ENGINEER JAMES P. GREGG
12/6/2018

STATE OF NORTH CAROLINA
DEPARTMENT OF TRANSPORTATION
RALEIGH

STANDARD
SUPERSTRUCTURE
BILL OF MATERIAL
RIGHT LANE

ASSEMBLED BY : A. SMITH DATE : 7/18
CHECKED BY : D. LAWRENCE DATE : 10/18

DRAWN BY : JMB 5/87
CHECKED BY : SJD 9/87

REV. 8/16/99 RWW/LES
REV. 5/1/06 TLA/GM
REV. 10/1/11 MAA/GM

DOCUMENT NOT CONSIDERED FINAL UNLESS ALL SIGNATURES COMPLETED

HNTB
HNTB NORTH CAROLINA, P.C.
NC License No. C-1554
343 E. Six Forks Rd., Suite 200, Raleigh, N.C. 27609

DRAWN BY A. SMITH DATE 7/18
CHECKED BY D. LAWRENCE DATE 10/18
DESIGN ENGINEER OF RECORD J. GREGG DATE 10/18

DWG. NO. 29

| REVISIONS | | | | | | SHEET NO. |
|---|---|---|---|---|---|---|
| NO. | BY | DATE | NO. | BY | DATE | S04-29 |
| 1 | | | 3 | | | TOTAL SHEETS |
| 2 | | | 4 | | | 46 |

STD. NO. BOM2

DocuSign Envelope ID: 11A1261F-14B1-49AE-A388-908A64E11071

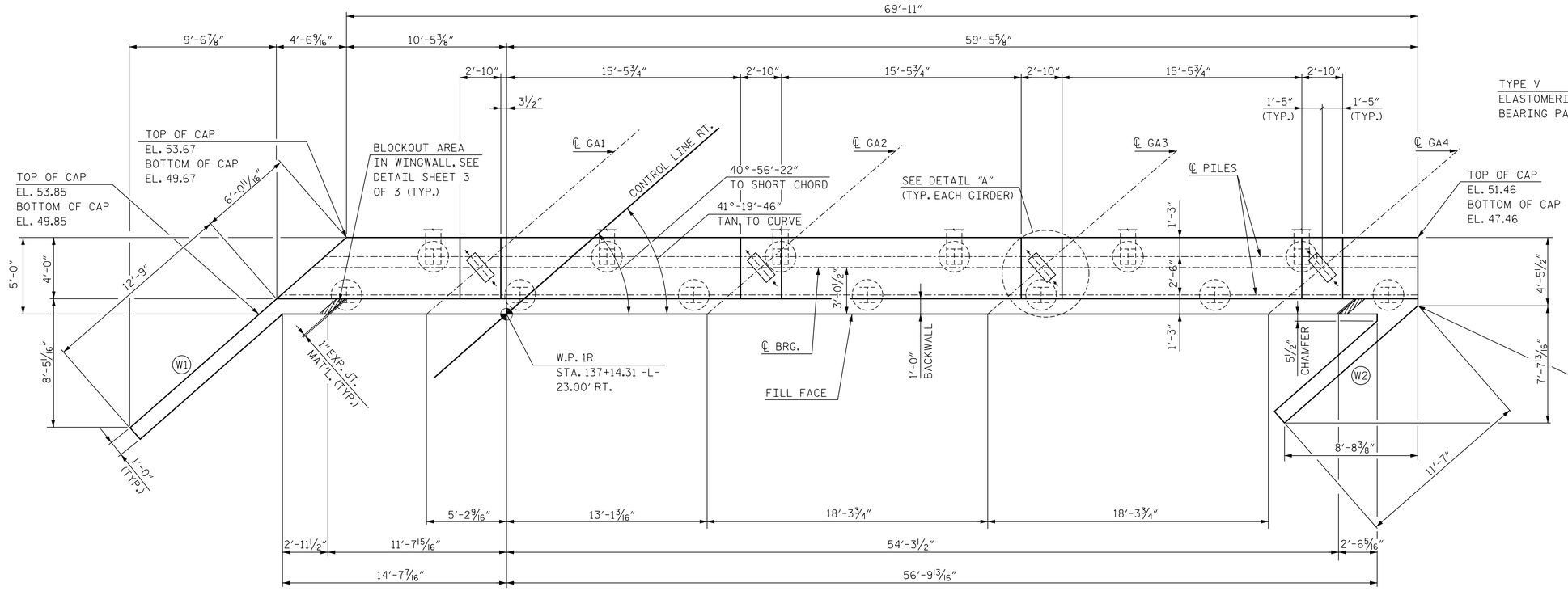


PLAN

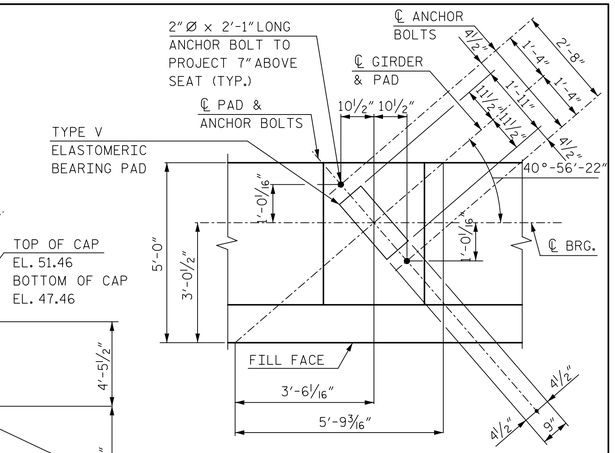


DETAIL A

| TOP OF PILE ELEVATIONS | |
|---|---|
| PILE | ELEVATION |
| 1 | 51.67 |
| 2 | 51.49 |
| 3 | 51.31 |
| 4 | 51.13 |
| 5 | 50.95 |
| 6 | 50.77 |
| 7 | 50.59 |
| 8 | 50.42 |
| 9 | 50.24 |
| 10 | 50.06 |
| 11 | 49.88 |
| 12 | 49.70 |
| 13 | 49.52 |

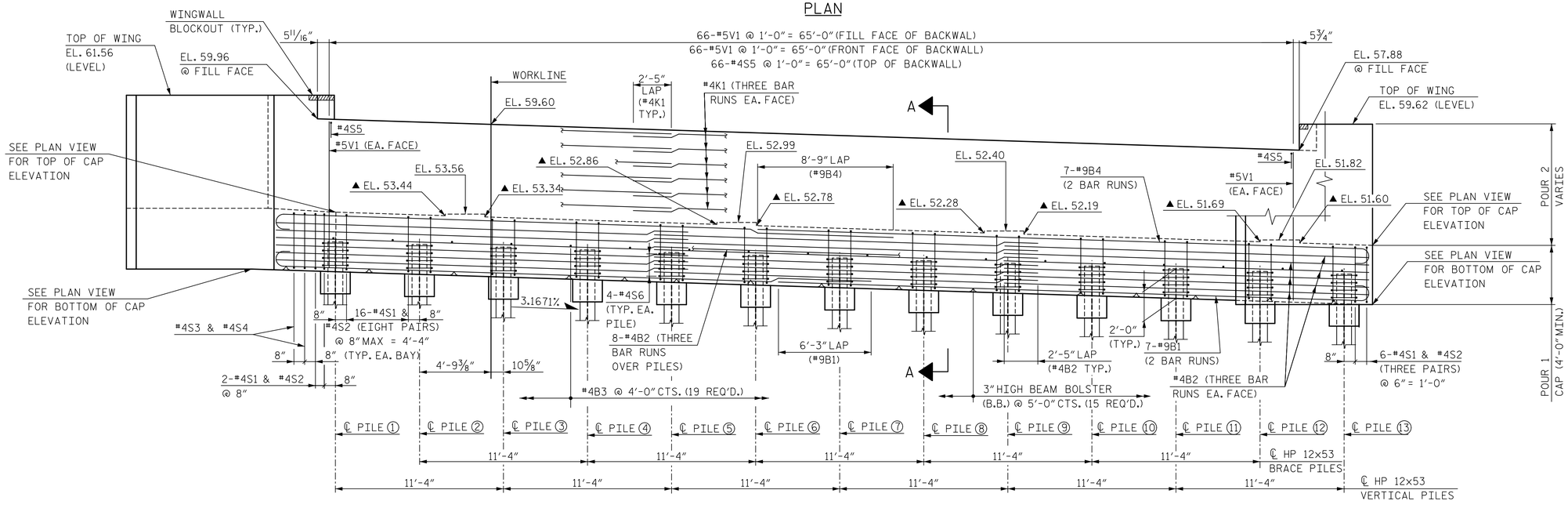


ELEVATION

▲ FOR LOCATION OF ELEVATIONS BETWEEN BRIDGE SEATS, SEE SECTION A-A, SHEET 2 OF 3.

NOTES:

FOR NOTES AND PILE SPLICE DETAILS, SEE SHEET 3 OF 3.

FOR WINGWALL DETAILS AND SECTION A-A, SEE SHEET 2 OF 3.

INDICATES 3:12 PILE BATTER IN DIRECTION SHOWN.

PROJECT NO. R-1015

CRAVEN COUNTY

STATION: POC STA. 138+31.09 -L-

SHEET 1 OF 3

STATE OF NORTH CAROLINA
DEPARTMENT OF TRANSPORTATION
RALEIGH

SUBSTRUCTURE

END BENT 1

RIGHT LANE

DocuSigned by: James P. Gregg
NORTH CAROLINA PROFESSIONAL SEAL 046632 ENGINEER JAMES P. GREGG
11/20/2018

DOCUMENT NOT CONSIDERED FINAL UNLESS ALL SIGNATURES COMPLETED

HNTB NORTH CAROLINA, P.C.
NC License No. C-1554
343 E. Six Forks Rd., Suite 200, Raleigh, N.C. 27609

DRAWN BY B. NEUPANE DATE 9/18
CHECKED BY E. JOWZA DATE 10/18
DESIGN ENGINEER OF RECORD J. GREGG DATE 10/18

DWG. NO. 30

| REVISIONS | | | | | | SHEET NO. |
|---|---|---|---|---|---|---|
| NO. | BY | DATE | NO. | BY | DATE | S04-30 |
| 1 | | | 3 | | | TOTAL SHEETS |
| 2 | | | 4 | | | 46 |

DocuSign Envelope ID: 11A1261F-14B1-49AE-A388-908A64E11071

NOTES:

FOR NOTES, SEE SHEET 3 OF 3.
FOR BLOCKOUT IN WINGWALL, SEE SHEET 3 OF 3.

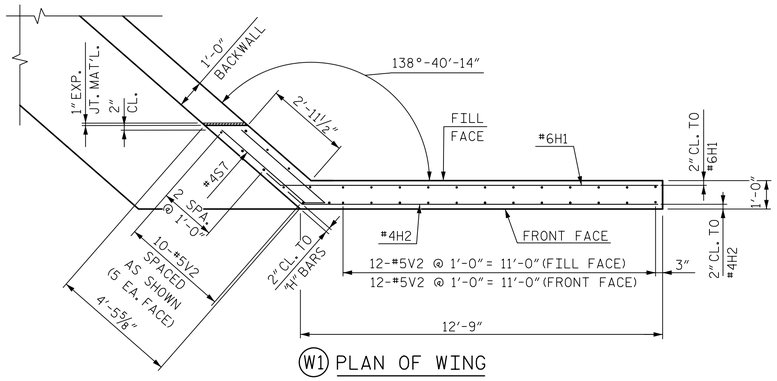


W1 PLAN OF WING

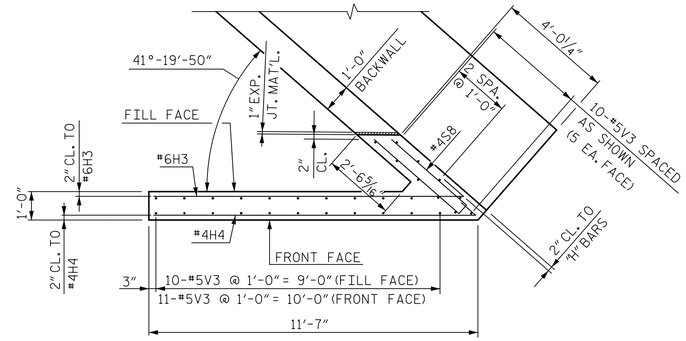


W2 PLAN OF WING

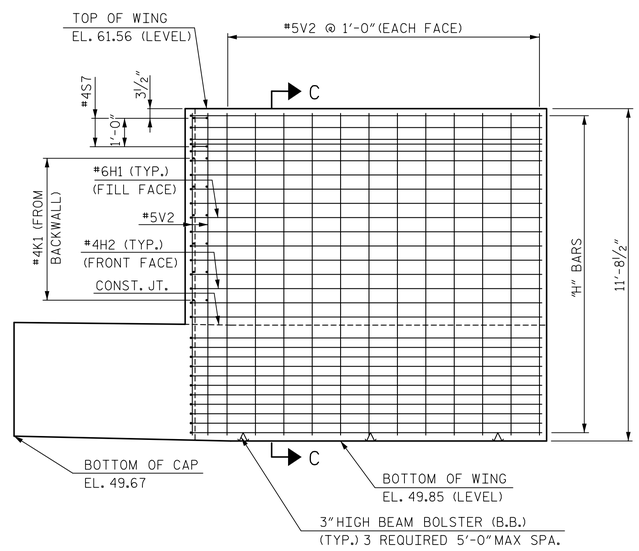


W1 ELEVATION OF WING

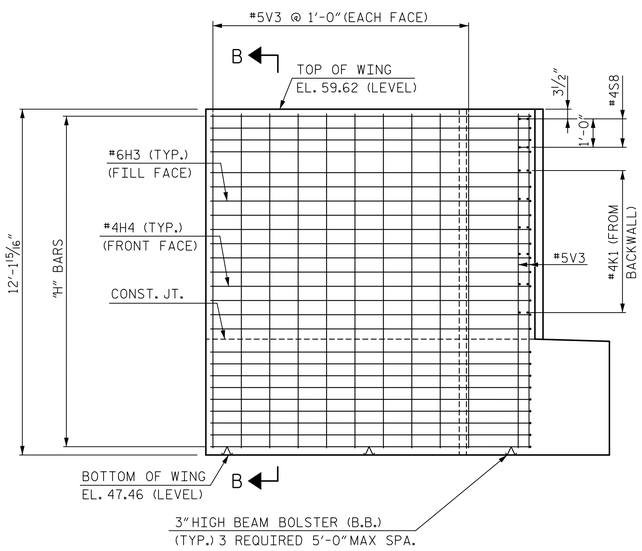


W2 ELEVATION OF WING

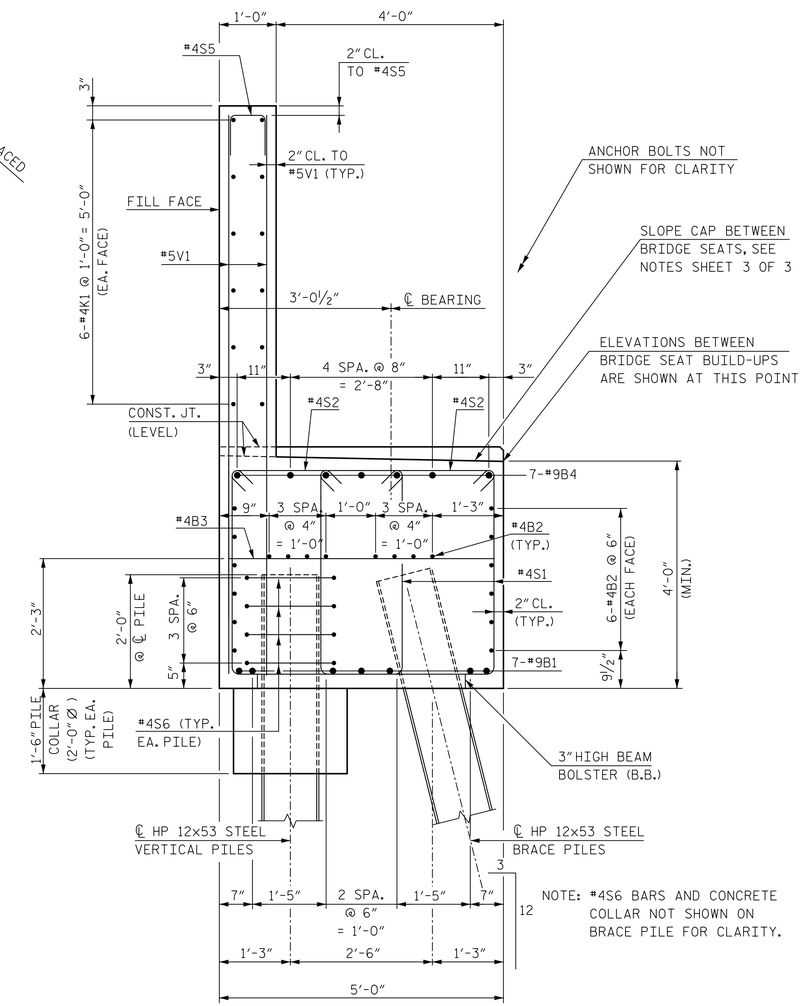


NOTE: #4S6 BARS AND CONCRETE COLLAR NOT SHOWN ON BRACE PILE FOR CLARITY.

SECTION A-A

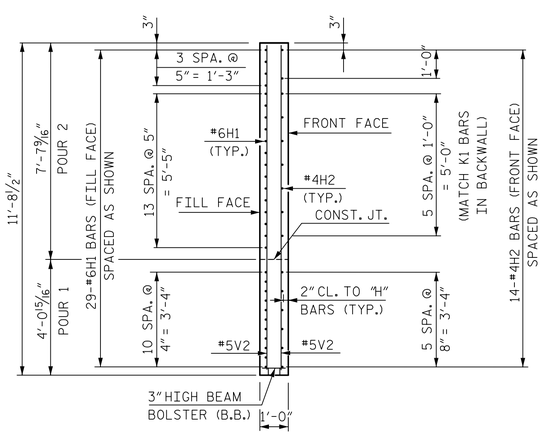


SECTION C-C

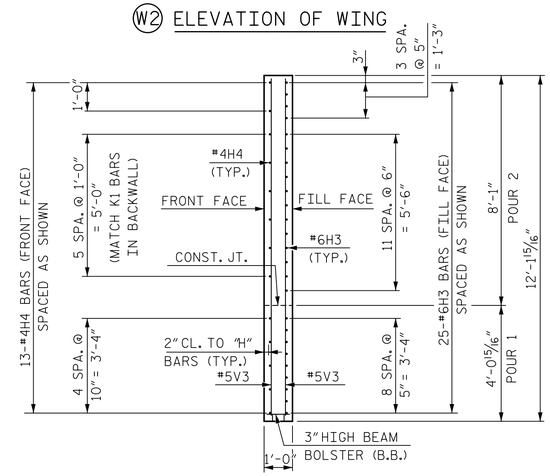


SECTION B-B

PROJECT NO. R-1015

CRAVEN COUNTY

STATION: POC STA. 138+31.09 -L-

SHEET 2 OF 3

STATE OF NORTH CAROLINA
DEPARTMENT OF TRANSPORTATION
RALEIGH

SUBSTRUCTURE

END BENT 1

RIGHT LANE

DocuSigned by: James P. Gregg
DocuSign Envelope ID: E024AB9C404...

NORTH CAROLINA PROFESSIONAL SEAL 046632 ENGINEER JAMES P. GREGG

11/20/2018

HNTB

HNTB NORTH CAROLINA, P.C.
NC License No. C-1554
343 E. Six Forks Rd., Suite 200, Raleigh, N.C. 27609

DRAWN BY B. NEUPANE DATE 9/18
CHECKED BY E. JOWZA DATE 10/18
DESIGN ENGINEER OF RECORD J. GREGG DATE 10/18

DWG. NO. 31

DOCUMENT NOT CONSIDERED FINAL UNLESS ALL SIGNATURES COMPLETED

| REVISIONS | | | | | | SHEET NO. |
|---|---|---|---|---|---|---|
| NO. | BY | DATE | NO. | BY | DATE | S04-31 |
| 1 | | | 3 | | | TOTAL SHEETS |
| 2 | | | 4 | | | 46 |

DocuSign Envelope ID: 88A0B777-7A2E-445F-ADAD-2E515F175E6D

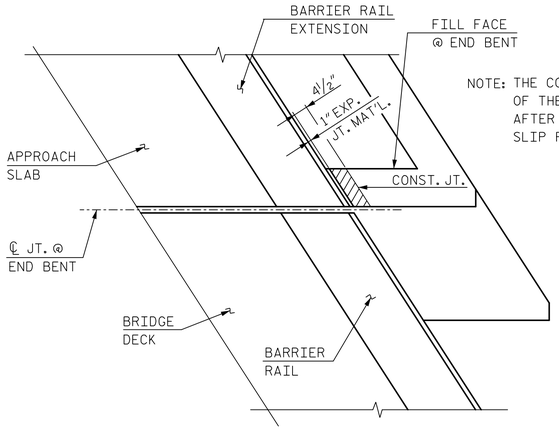


NOTE: THE CONCRETE IN THE SHADED AREA OF THE WING SHALL BE POURED AFTER BARRIER RAILS ARE CAST IF SLIP FORMING IS USED.

PLAN

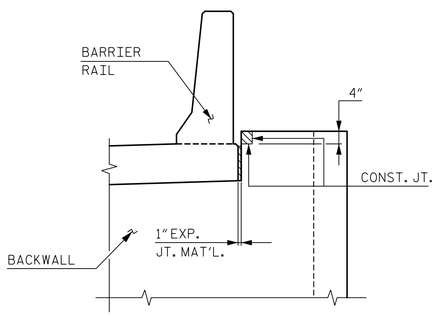


ELEVATION

BLOCKOUT IN WINGWALL

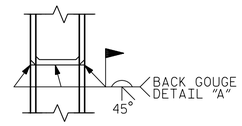


*PILE VERTICAL

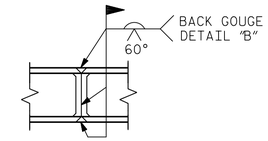


*PILE HORIZONTAL OR VERTICAL

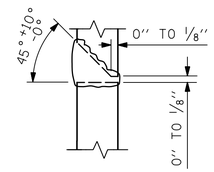


DETAIL "A"

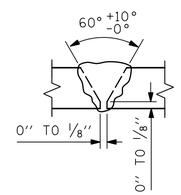


DETAIL "B"

* POSITION OF PILE DURING WELDING.

## PILE SPLICE DETAILS

NOTES:

STIRRUPS IN CAP MAY BE SHIFTED AS NECESSARY TO CLEAR ANCHOR BOLTS.

BACKWALL SHALL BE PLACED BEFORE APPLYING THE EPOXY PROTECTIVE COATING.

THE TOP SURFACE AREAS OF THE END BENT CAPS SHALL BE CURED IN ACCORDANCE WITH THE STANDARD SPECIFICATIONS EXCEPT THE MEMBRANE CURING COMPOUND METHOD SHALL NOT BE USED.

THE TOP SURFACE OF THE END BENT CAP EXCEPT THE BRIDGE SEAT BUILDUPS SHALL BE SLOPED TRANSVERSELY FROM THE FILL FACE TO THE BACK FACE AT THE RATE OF 2%.

## BAR TYPES

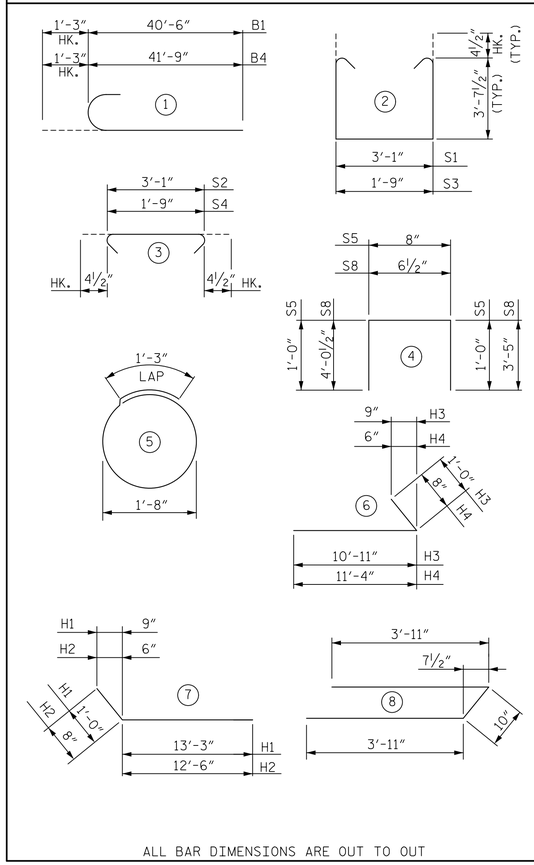


ALL BAR DIMENSIONS ARE OUT TO OUT

## BILL OF REINFORCING

END BENT 1

| BAR | NO. | SIZE | TYPE | LENGTH | WEIGHT |
|---|---|---|---|---|---|
| B1 | 14 | 9 | 1 | 41'-9" | 1,987 |
| B2 | 60 | 4 | STR | 26'-6" | 1,062 |
| B3 | 19 | 4 | STR | 4'-8" | 59 |
| B4 | 14 | 9 | 1 | 43'-0" | 2,047 |
| H1 | 29 | 6 | 7 | 14'-3" | 621 |
| H2 | 14 | 4 | 7 | 13'-2" | 123 |
| H3 | 25 | 6 | 6 | 11'-11" | 447 |
| H4 | 13 | 4 | 6 | 12'-0" | 104 |
| K1 | 36 | 4 | STR | 26'-6" | 637 |
| S1 | 200 | 4 | 2 | 11'-1" | 1,481 |
| S2 | 200 | 4 | 3 | 3'-10" | 512 |
| S3 | 2 | 4 | 2 | 9'-9" | 13 |
| S4 | 2 | 4 | 3 | 2'-6" | 3 |
| S5 | 66 | 4 | 4 | 2'-8" | 118 |
| S6 | 52 | 4 | 5 | 6'-6" | 226 |
| S7 | 2 | 4 | 8 | 8'-8" | 12 |
| S8 | 2 | 4 | 4 | 8'-0" | 11 |
| V1 | 132 | 5 | STR | 9'-10" | 1,354 |
| V2 | 34 | 5 | STR | 11'-3" | 399 |
| V3 | 31 | 5 | STR | 11'-9" | 380 |

## QUANTITIES

| | | |
|---|---|---|
| REINFORCING STEEL | LBS. | 11,596 |
| CLASS "A" CONCRETE BREAKDOWN | | |
| POUR 1 - CAP, COLLARS & BOT. OF WINGS | CU. YDS. | 60.6 |
| POUR 2 - TOP OF WINGS & BACKWALL | CU. YDS. | 24.1 |
| TOTAL | CU. YDS. | 84.7 |
| HP 12x53 STEEL PILES | NO. | 13 |
| | LIN. FT. | 1365 |
| PILE REDRIVES | EA. | 6 |
| PILE DRIVING EQUIPMENT SETUP | EA. | 13 |

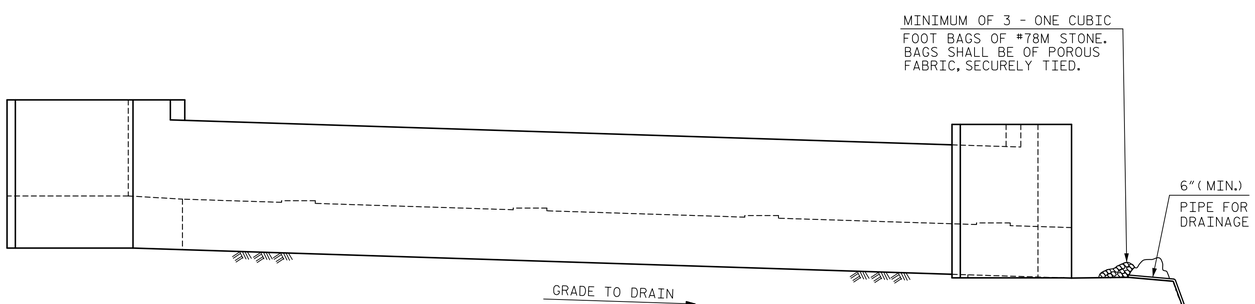


BAGGED STONE AND PIPE SHALL BE PLACED IMMEDIATELY AFTER COMPLETION OF END BENT EXCAVATION. PIPE MAY BE EITHER CONCRETE, CORRUGATED STEEL, CORRUGATED ALUMINUM ALLOY OR CORRUGATED PLASTIC. PERFORATED PIPE WILL NOT BE ALLOWED.

BAGGED STONE SHALL REMAIN IN PLACE UNTIL THE ENGINEER DIRECTS THAT IT BE REMOVED. THE CONTRACTOR SHALL REMOVE AND DISPOSE OF SILT ACCUMULATIONS AT BAGGED STONE WHEN SO DIRECTED BY THE ENGINEER. BAGS SHALL BE REMOVED AND REPLACED WHENEVER THE ENGINEER DETERMINES THAT THEY HAVE DETERIORATED AND LOST THEIR EFFECTIVENESS.

NO SEPARATE PAYMENT WILL BE MADE FOR THIS WORK AND THE ENTIRE COST OF THIS WORK SHALL BE INCLUDED IN THE UNIT CONTRACT PRICE FOR THE SEVERAL PAY ITEMS.

TEMPORARY DRAINAGE AT END BENT 1

PROJECT NO. R-1015

CRAVEN COUNTY

STATION: POC STA. 138+31.09 -L-

SHEET 3 OF 3

STATE OF NORTH CAROLINA
DEPARTMENT OF TRANSPORTATION
RALEIGH

SUBSTRUCTURE

END BENT 1

RIGHT LANE

DocuSigned by: James P. Gregg
NORTH CAROLINA PROFESSIONAL SEAL 046632 ENGINEER JAMES P. GREGG
12/6/2018

HNTB NORTH CAROLINA, P.C.
NC License No. C-1554
343 E. Six Forks Rd., Suite 200, Raleigh, N.C. 27609

DRAWN BY B. NEUPANE DATE 9/18
CHECKED BY E. JOWZA DATE 10/18
DESIGN ENGINEER OF RECORD J. GREGG DATE 10/18

DWG. NO. 32

DOCUMENT NOT CONSIDERED FINAL UNLESS ALL SIGNATURES COMPLETED

| REVISIONS | | | | | | SHEET NO. |
|---|---|---|---|---|---|---|
| NO. | BY | DATE | NO. | BY | DATE | S04-32 |
| 1 | | | 3 | | | TOTAL SHEETS |
| 2 | | | 4 | | | 46 |

DocuSign Envelope ID: 11A1261F-14B1-49AE-A388-908A64E11071

NOTES:

ALL DIMENSIONS SHOWN ARE PARALLEL OR NORMAL TO ℄ BENT UNLESS NOTED.

STIRRUPS IN CAP MAY BE SHIFTED AS NECESSARY TO CLEAR ANCHOR BOLTS.

HOOKS ON "V" BARS MAY BE TURNED AS NECESSARY FOR PLACING REINFORCING STEEL.

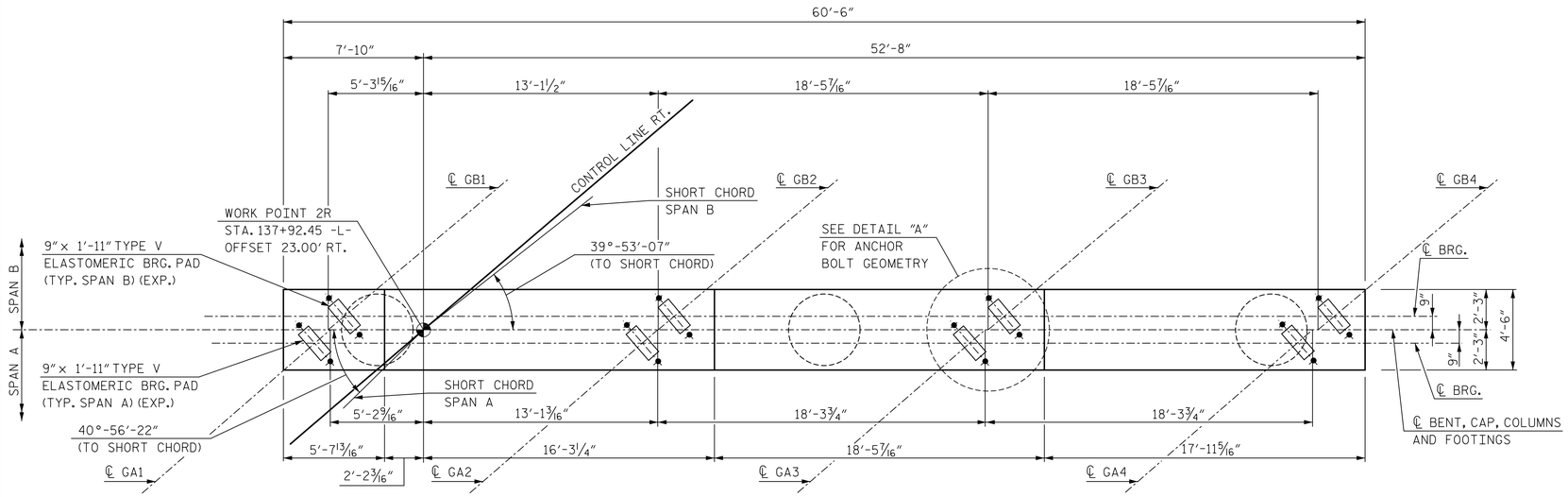


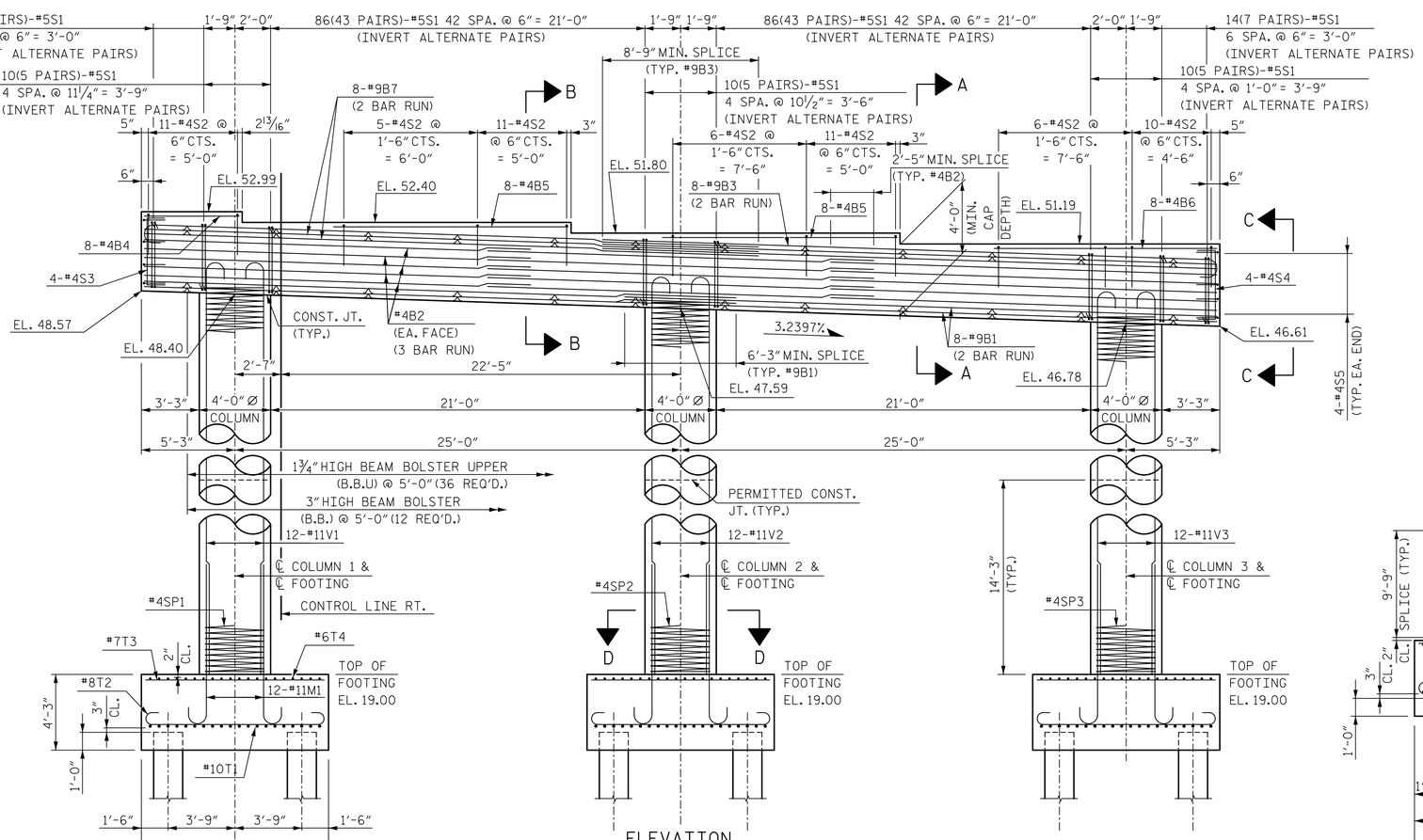


ELEVATION

(FOOTING REINFORCING AND DIMENSIONS ARE TYPICAL FOR EACH FOOTING)

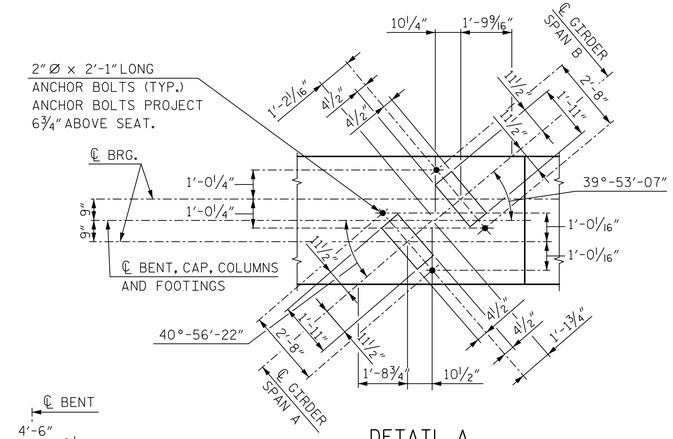


DETAIL A

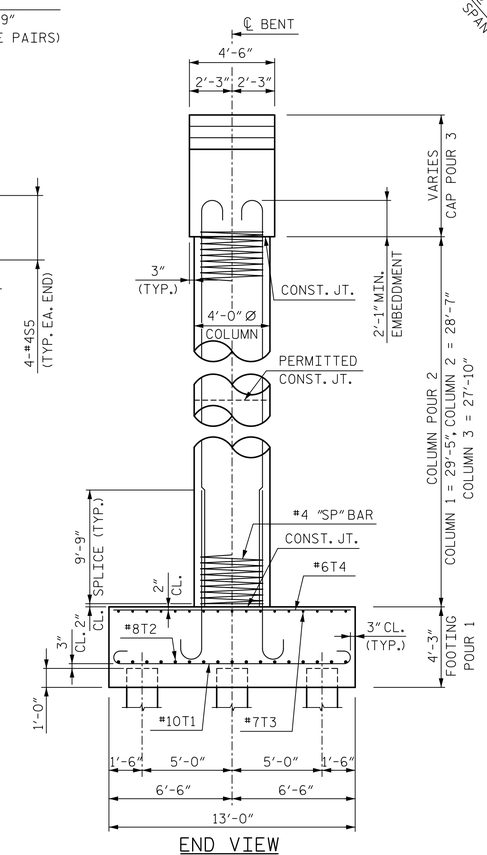


END VIEW

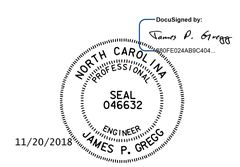


PROJECT NO. R-1015

CRAVEN COUNTY

STATION: POC STA. 138+31.09 -L-

SHEET 1 OF 2

STATE OF NORTH CAROLINA
DEPARTMENT OF TRANSPORTATION
RALEIGH

SUBSTRUCTURE

BENT 1

RIGHT LANE

HNTB NORTH CAROLINA, P.C.
NC License No. C-1554
343 E. Six Forks Rd., Suite 200, Raleigh, N.C. 27609

DRAWN BY A. SMITH DATE 7/18
CHECKED BY B. NEUPANE DATE 9/18
DESIGN ENGINEER OF RECORD J. GREGG DATE 10/18

DWG. NO. 33

| REVISIONS | | | | | | SHEET NO. |
|---|---|---|---|---|---|---|
| NO. | BY | DATE | NO. | BY | DATE | S03-33 |
| 1 | | | 3 | | | TOTAL SHEETS |
| 2 | | | 4 | | | 46 |

DOCUMENT NOT CONSIDERED FINAL UNLESS ALL SIGNATURES COMPLETED

DocuSign Envelope ID: 88A0B777-7A2E-445F-ADAD-2E515F175E6D

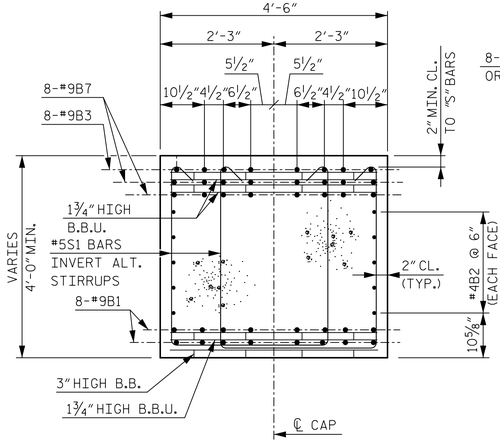


SECTION A-A

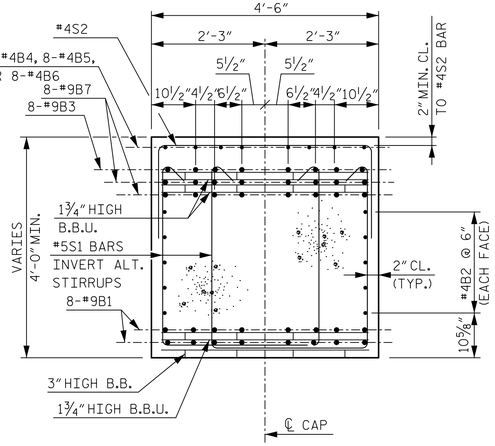


SECTION B-B

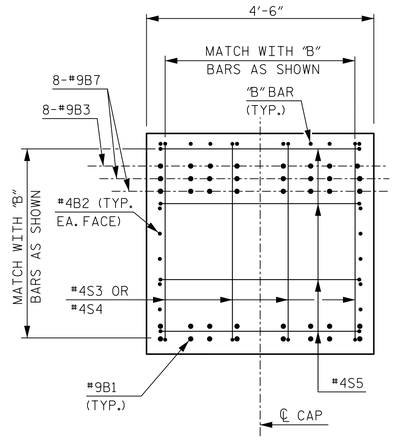


VIEW C-C

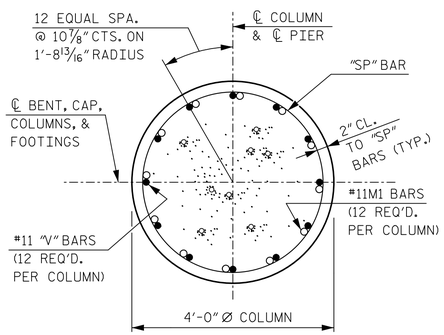


SECTION D-D

## BAR TYPES

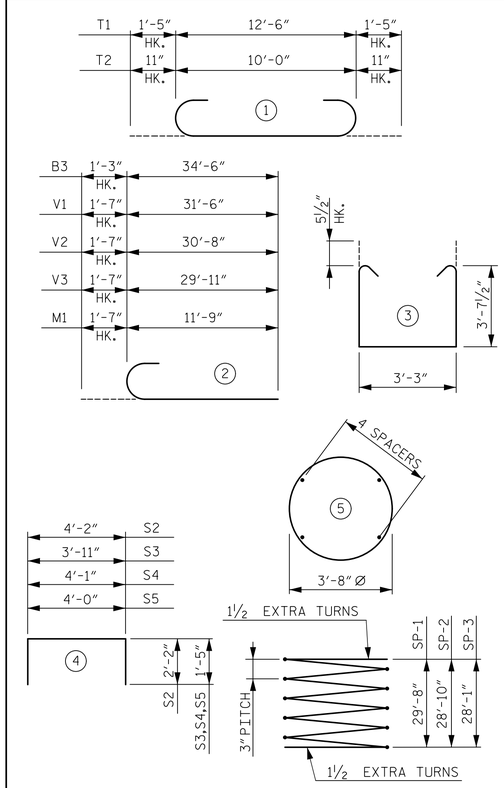


ALL BAR DIMENSIONS ARE OUT TO OUT

✳ THE SP-1, SP-2, AND SP-3 SPIRAL REINFORCING STEEL SHALL BE W20 OR D20 COLD DRAWN WIRE OR #4 PLAIN OR DEFORMED BAR.

## BILL OF REINFORCING

BENT 1

| BAR | NO. | SIZE | TYPE | LENGTH | WEIGHT |
|---|---|---|---|---|---|
| B1 | 32 | 9 | STR | 33'-3" | 3,618 |
| B2 | 30 | 4 | STR | 21'-9" | 436 |
| B3 | 16 | 9 | 2 | 35'-9" | 1,945 |
| B4 | 8 | 4 | STR | 5'-3" | 28 |
| B5 | 16 | 4 | STR | 13'-2" | 141 |
| B6 | 8 | 4 | STR | 13'-0" | 69 |
| B7 | 32 | 9 | STR | 34'-6" | 3,754 |
| M1 | 36 | 11 | 2 | 13'-4" | 2,550 |
| S1 | 218 | 5 | 3 | 11'-5" | 2,596 |
| S2 | 60 | 4 | 4 | 8'-6" | 341 |
| S3 | 4 | 4 | 4 | 6'-9" | 18 |
| S4 | 4 | 4 | 4 | 6'-11" | 18 |
| S5 | 8 | 4 | 4 | 6'-10" | 37 |
| T1 | 60 | 10 | 1 | 15'-4" | 3,959 |
| T2 | 51 | 8 | 1 | 11'-10" | 1,611 |
| T3 | 51 | 7 | STR | 10'-0" | 1,042 |
| T4 | 60 | 6 | STR | 12'-6" | 1,127 |
| V1 | 12 | 11 | 2 | 33'-1" | 2,109 |
| V2 | 12 | 11 | 2 | 32'-3" | 2,056 |
| V3 | 12 | 11 | 2 | 31'-6" | 2,008 |
| SP-1 | 1 | ✳ | 5 | 1402'-0" | 937 |
| SP-2 | 1 | ✳ | 5 | 1363'-7" | 911 |
| SP-3 | 1 | ✳ | 5 | 1329'-0" | 888 |

## QUANTITIES

| | | |
|---|---|---|
| REINFORCING STEEL | LBS. | 29,463 |
| SPIRAL COLUMN REINFORCING STEEL | LBS. | 2,736 |
| CLASS A CONCRETE | | |
| FOOTING POUR 1 | CU. YDS. | 64.5 |
| COLUMN POUR 2 | CU. YDS. | 40.0 |
| CAP POUR 3 | CU. YDS. | 43.7 |
| TOTAL | CU. YDS. | 148.2 |
| HP 12X53 STEEL PILES | NO. | 18 |
| | LIN FT. | 1,350 |
| PILE REDRIVES | EA. | 9 |
| PILE DRIVING EQUIPMENT SETUP | EA. | 18 |

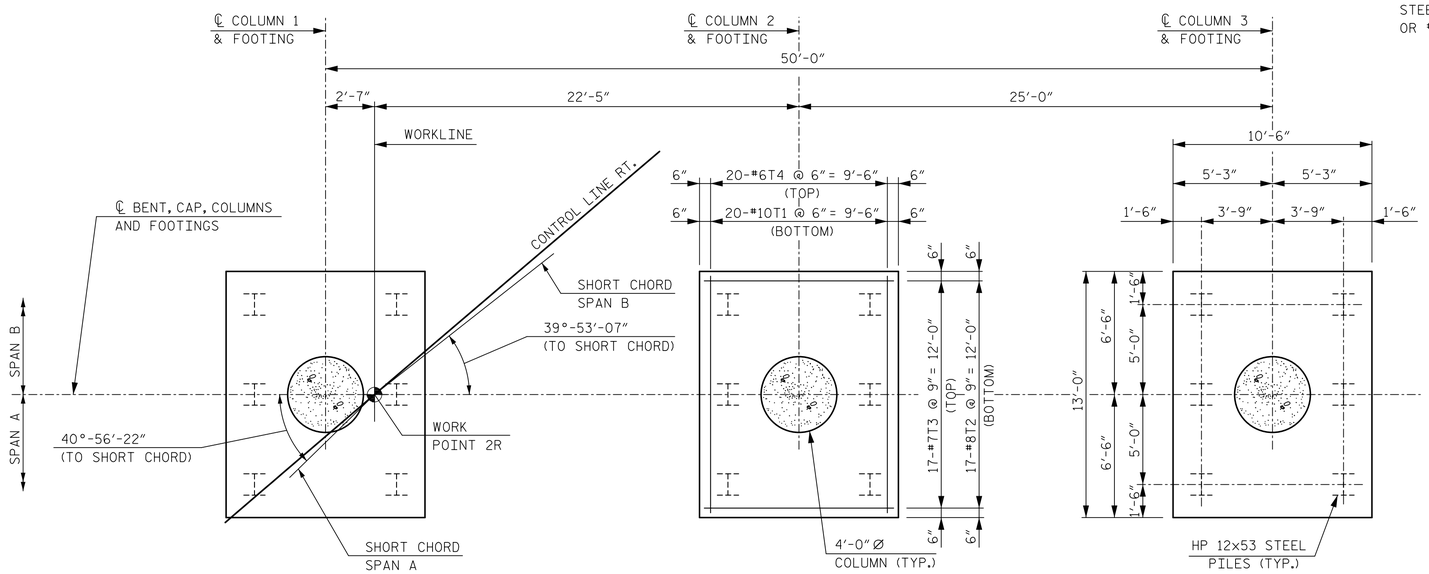


FOOTING PLAN

(FOOTING REINFORCING AND DIMENSIONS ARE TYPICAL FOR EACH FOOTING)

PROJECT NO. R-1015

CRAVEN COUNTY

STATION: POC STA. 138+31.09 -L-

SHEET 2 OF 2

STATE OF NORTH CAROLINA
DEPARTMENT OF TRANSPORTATION
RALEIGH

SUBSTRUCTURE

BENT 1

RIGHT LANE

DocuSigned by: James P. Gregg

NORTH CAROLINA PROFESSIONAL SEAL 046632 ENGINEER JAMES P. GREGG

12/6/2018

DOCUMENT NOT CONSIDERED FINAL UNLESS ALL SIGNATURES COMPLETED

HNTB

HNTB NORTH CAROLINA, P.C.
NC License No. C-1554
343 E. Six Forks Rd., Suite 200, Raleigh, N.C. 27609

DRAWN BY A. SMITH DATE 7/18
CHECKED BY B. NEUPANE DATE 9/18
DESIGN ENGINEER OF RECORD J. GREGG DATE 10/18

DWG. NO. 34

REVISIONS

| NO. | BY | DATE | NO. | BY | DATE |
|---|---|---|---|---|---|
| 1 | | | 3 | | |
| 2 | | | 4 | | |

SHEET NO. S04-34

TOTAL SHEETS 46

DocuSign Envelope ID: 88A0B777-7A2E-445F-ADAD-2E515F175E6D

NOTES:

ALL DIMENSIONS SHOWN ARE PARALLEL OR NORMAL TO ℄ BENT UNLESS NOTED.

STIRRUPS IN CAP MAY BE SHIFTED AS NECESSARY TO CLEAR ANCHOR BOLTS.

HOOKS ON "V" BARS MAY BE TURNED AS NECESSARY FOR PLACING REINFORCING STEEL.

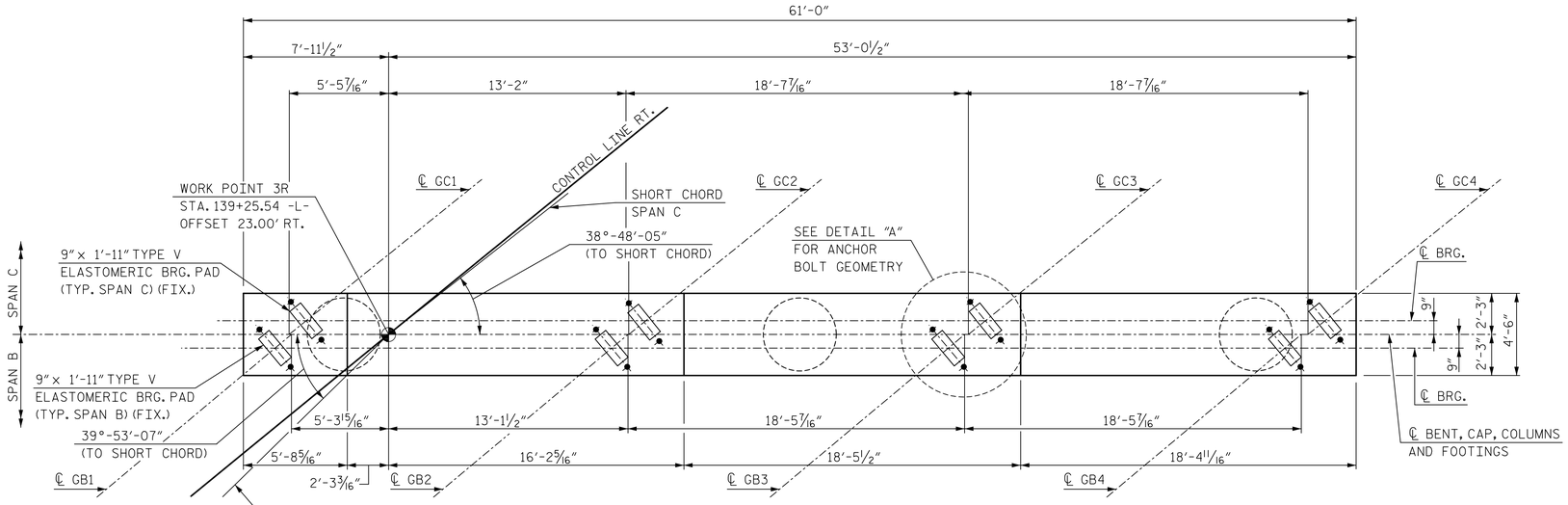


PLAN

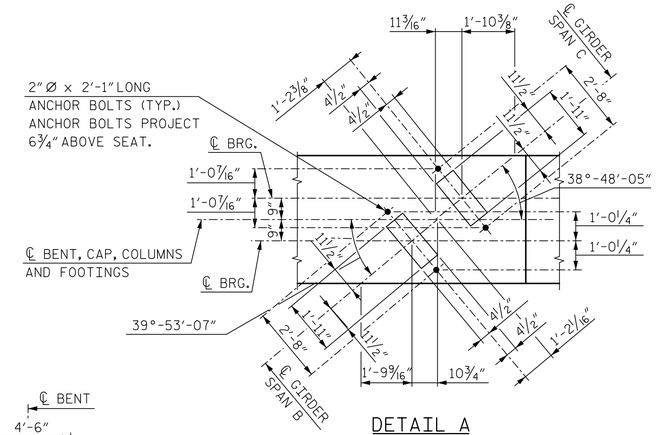


DETAIL A

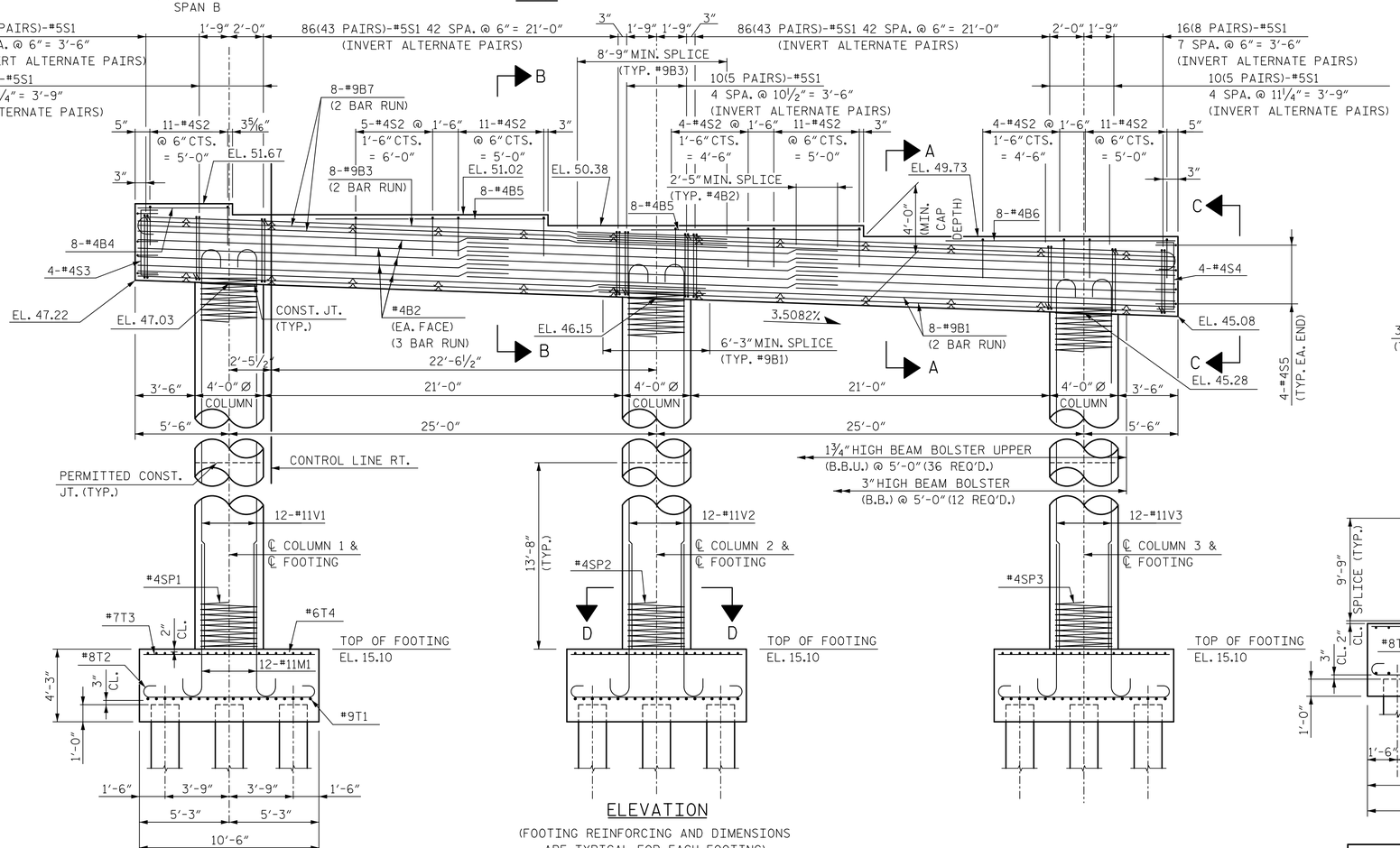


ELEVATION

(FOOTING REINFORCING AND DIMENSIONS ARE TYPICAL FOR EACH FOOTING)

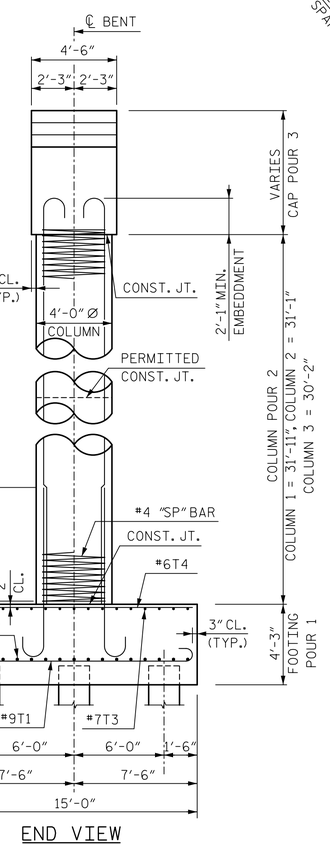


END VIEW

DocuSigned by:
12/6/2018

NORTH CAROLINA PROFESSIONAL SEAL 046632 ENGINEER JAMES P. GREGG

PROJECT NO. R-1015

CRAVEN COUNTY

STATION: POC STA. 138+31.09 -L-

SHEET 1 OF 2

STATE OF NORTH CAROLINA
DEPARTMENT OF TRANSPORTATION
RALEIGH

SUBSTRUCTURE

BENT 2

RIGHT LANE

HNTB NORTH CAROLINA, P.C.
NC License No. C-1554
343 E. Six Forks Rd., Suite 200, Raleigh, N.C. 27609

DRAWN BY A. SMITH DATE 7/18
CHECKED BY B. NEUPANE DATE 9/18
DESIGN ENGINEER OF RECORD J. GREGG DATE 10/18

DWG. NO. 35

| REVISIONS | | | | | | SHEET NO. |
|---|---|---|---|---|---|---|
| NO. | BY | DATE | NO. | BY | DATE | S04-35 |
| 1 | | | 3 | | | TOTAL SHEETS |
| 2 | | | 4 | | | 46 |

DOCUMENT NOT CONSIDERED FINAL UNLESS ALL SIGNATURES COMPLETED

DocuSign Envelope ID: 88A0B777-7A2E-445F-ADAD-2E515F175E6D

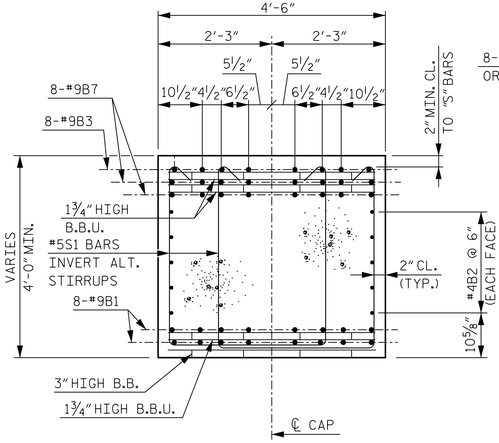


SECTION A-A

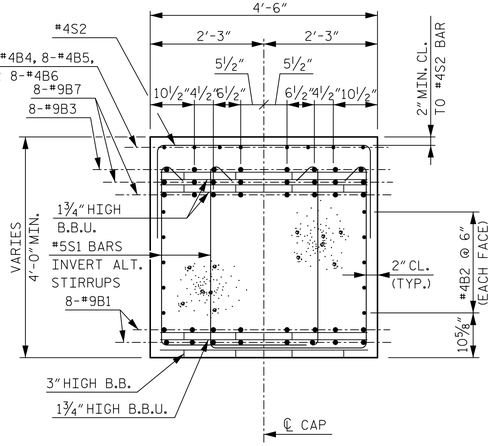


SECTION B-B

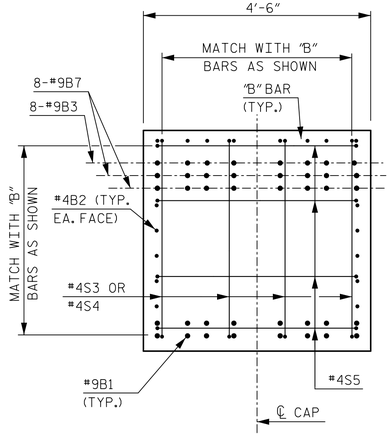


VIEW C-C

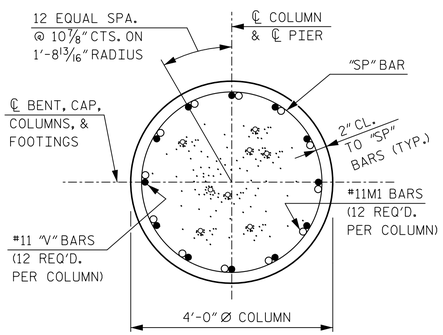


SECTION D-D

## BAR TYPES

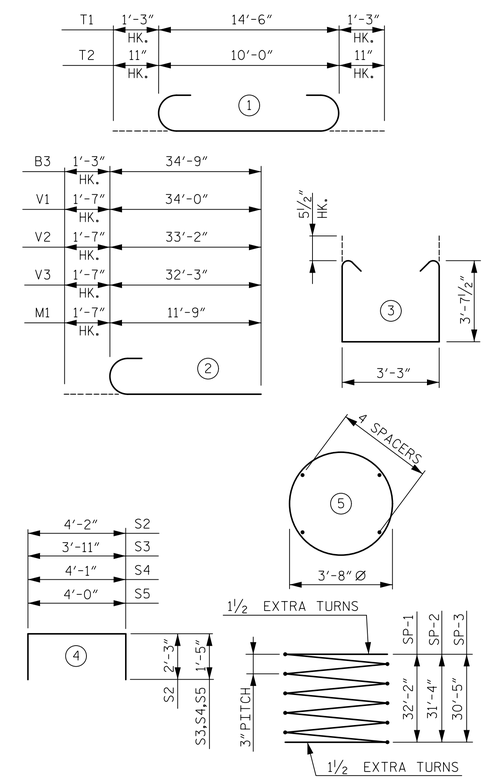


ALL BAR DIMENSIONS ARE OUT TO OUT

✳ THE SP-1, SP-2, AND SP-3 SPIRAL REINFORCING STEEL SHALL BE W20 OR D20 COLD DRAWN WIRE OR #4 PLAIN OR DEFORMED BAR.

## BILL OF REINFORCING

BENT 2

| BAR | NO. | SIZE | TYPE | LENGTH | WEIGHT |
|---|---|---|---|---|---|
| B1 | 32 | 9 | STR | 33'-6" | 3,645 |
| B2 | 30 | 4 | STR | 22'-0" | 441 |
| B3 | 16 | 9 | 2 | 36'-0" | 1,958 |
| B4 | 8 | 4 | STR | 5'-4" | 29 |
| B5 | 16 | 4 | STR | 13'-0" | 139 |
| B6 | 8 | 4 | STR | 12'-0" | 64 |
| B7 | 32 | 9 | STR | 34'-9" | 3,781 |
| M1 | 36 | 11 | 2 | 13'-4" | 2,550 |
| S1 | 222 | 5 | 3 | 11'-5" | 2,643 |
| S2 | 57 | 4 | 4 | 8'-8" | 330 |
| S3 | 4 | 4 | 4 | 6'-9" | 18 |
| S4 | 4 | 4 | 4 | 6'-11" | 18 |
| S5 | 8 | 4 | 4 | 6'-10" | 37 |
| T1 | 60 | 9 | 1 | 17'-0" | 3,468 |
| T2 | 51 | 8 | 1 | 11'-10" | 1,611 |
| T3 | 51 | 7 | STR | 10'-0" | 1,042 |
| T4 | 60 | 6 | STR | 14'-6" | 1,307 |
| V1 | 12 | 11 | 2 | 35'-7" | 2,269 |
| V2 | 12 | 11 | 2 | 34'-9" | 2,216 |
| V3 | 12 | 11 | 2 | 33'-10" | 2,157 |
| SP-1 | 1 | ✳ | 5 | 1517'-3" | 1,014 |
| SP-2 | 1 | ✳ | 5 | 1478'-10" | 988 |
| SP-3 | 1 | ✳ | 5 | 1436'-7" | 960 |

## QUANTITIES

| | | |
|---|---|---|
| REINFORCING STEEL | LBS. | 29,723 |
| SPIRAL COLUMN REINFORCING STEEL | LBS. | 2,962 |
| CLASS A CONCRETE | | |
| FOOTING POUR 1 | CU. YDS. | 74.4 |
| COLUMN POUR 2 | CU. YDS. | 43.4 |
| CAP POUR 3 | CU. YDS. | 44.2 |
| TOTAL | CU. YDS. | 162.0 |
| HP 12X53 STEEL PILES | NO. | 24 |
| | LIN FT. | 1,680 |
| PILE REDRIVES | EA. | 12 |
| PILE DRIVING EQUIPMENT SETUP | EA. | 24 |

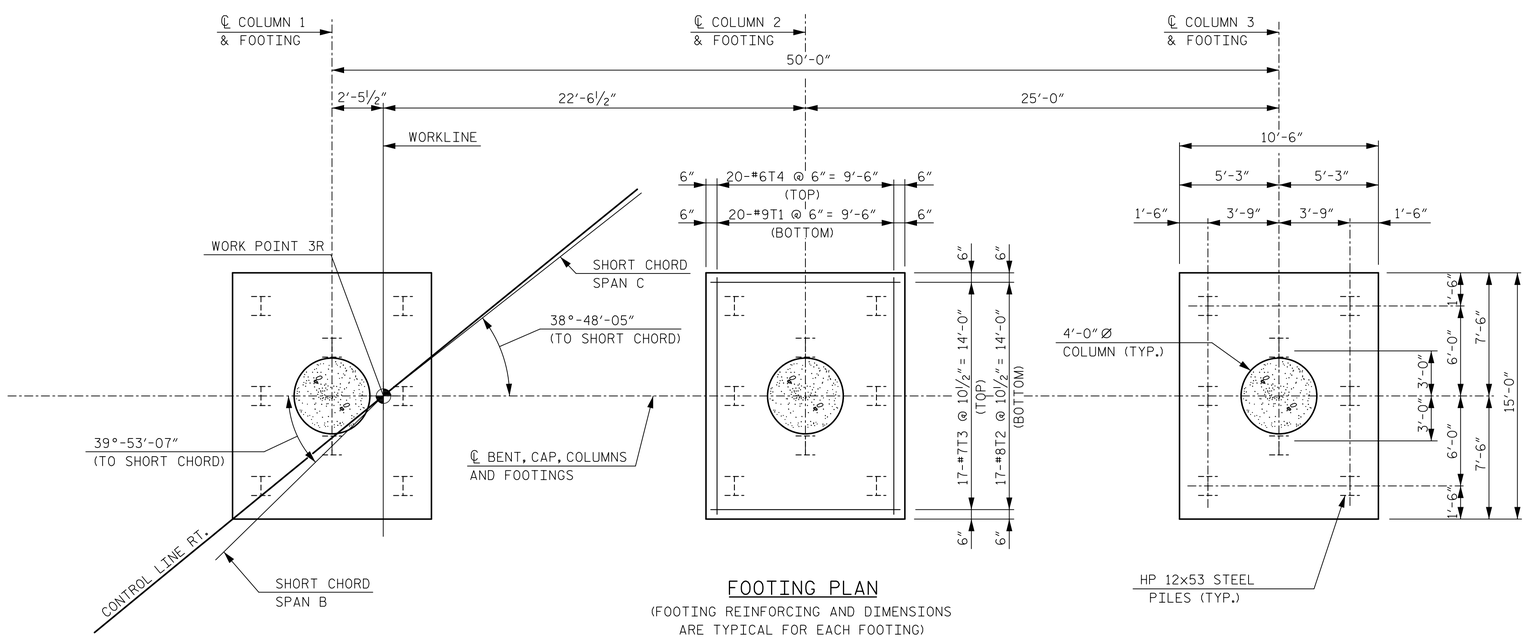


FOOTING PLAN

(FOOTING REINFORCING AND DIMENSIONS ARE TYPICAL FOR EACH FOOTING)

**DOCUMENT NOT CONSIDERED FINAL UNLESS ALL SIGNATURES COMPLETED**

PROJECT NO. R-1015

CRAVEN COUNTY

STATION: POC STA. 138+31.09 -L-

SHEET 2 OF 2

STATE OF NORTH CAROLINA
DEPARTMENT OF TRANSPORTATION
RALEIGH

SUBSTRUCTURE

BENT 2

RIGHT LANE

DocuSigned by: James P. Gregg 12/6/2018
NORTH CAROLINA PROFESSIONAL SEAL 046632 ENGINEER JAMES P. GREGG

HNTB NORTH CAROLINA, P.C.
NC License No. C-1554
343 E. Six Forks Rd., Suite 200, Raleigh, N.C. 27609

DRAWN BY A. SMITH DATE 7/18
CHECKED BY B. NEUPANE DATE 9/18
DESIGN ENGINEER OF RECORD J. GREGG DATE 10/18

DWG. NO. 36

| REVISIONS | | | | | | SHEET NO. |
|---|---|---|---|---|---|---|
| NO. | BY | DATE | NO. | BY | DATE | S04-36 |
| 1 | | | 3 | | | TOTAL SHEETS |
| 2 | | | 4 | | | 46 |

DocuSign Envelope ID: 11A1261F-14B1-49AE-A388-908A64E11071

NOTES:

ALL DIMENSIONS SHOWN ARE PARALLEL OR NORMAL TO ℄ BENT UNLESS NOTED.

STIRRUPS IN CAP MAY BE SHIFTED AS NECESSARY TO CLEAR ANCHOR BOLTS.

HOOKS ON "V" BARS MAY BE TURNED AS NECESSARY FOR PLACING REINFORCING STEEL.

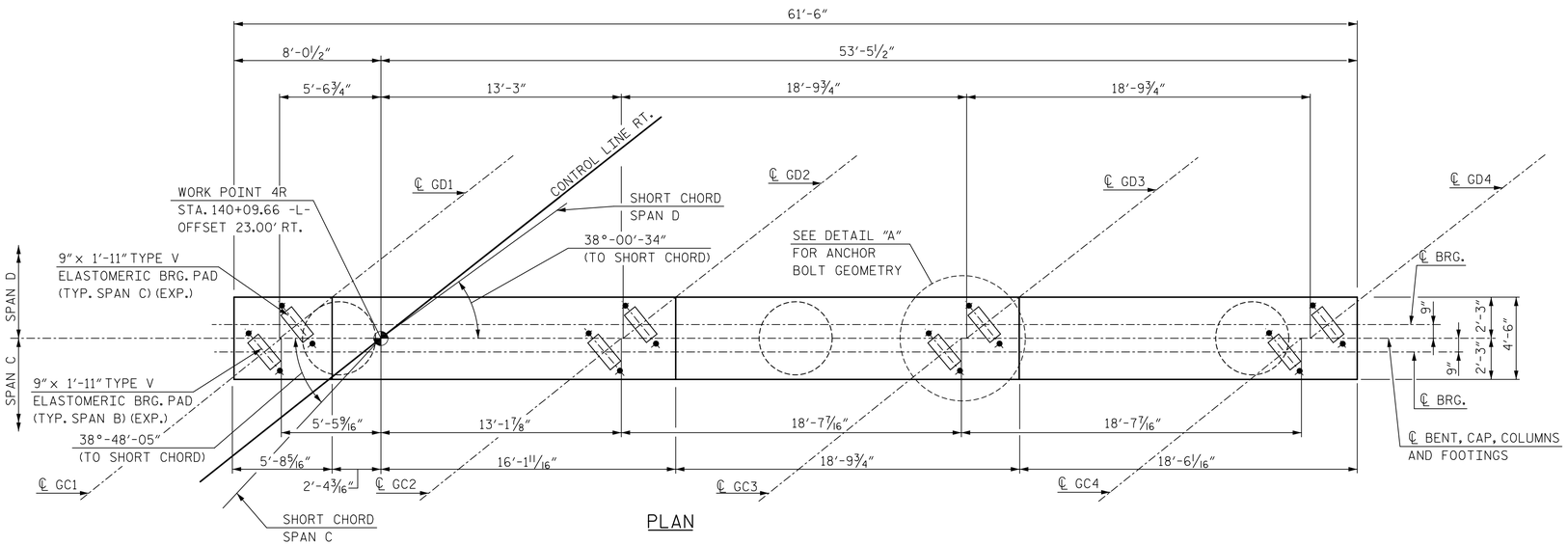


PLAN

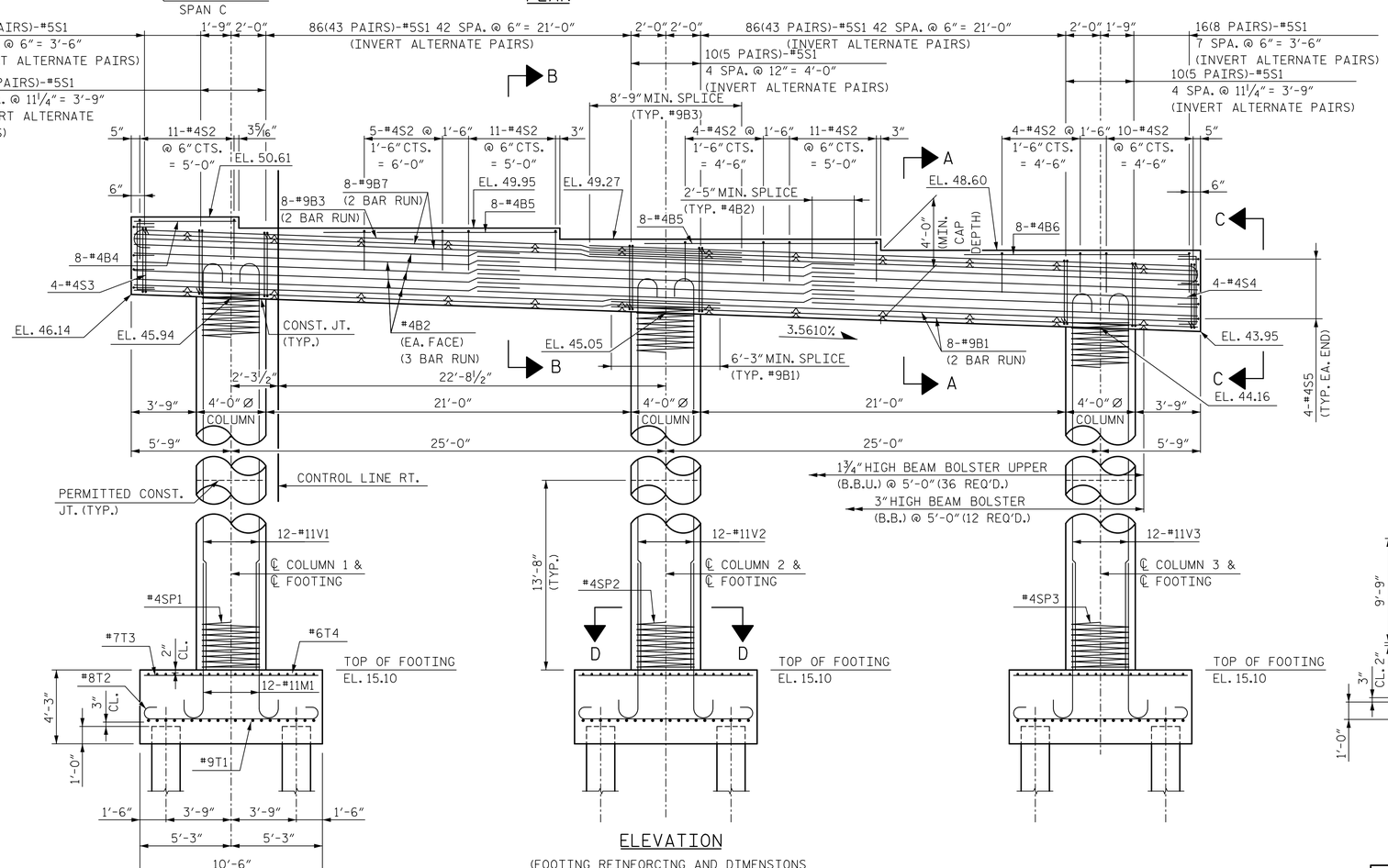


ELEVATION

(FOOTING REINFORCING AND DIMENSIONS ARE TYPICAL FOR EACH FOOTING)

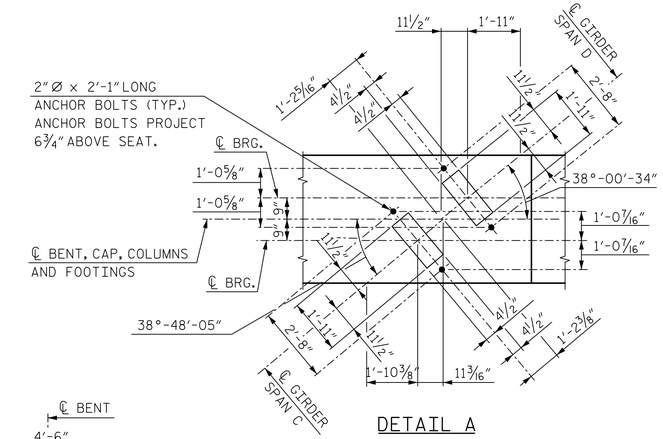


DETAIL A

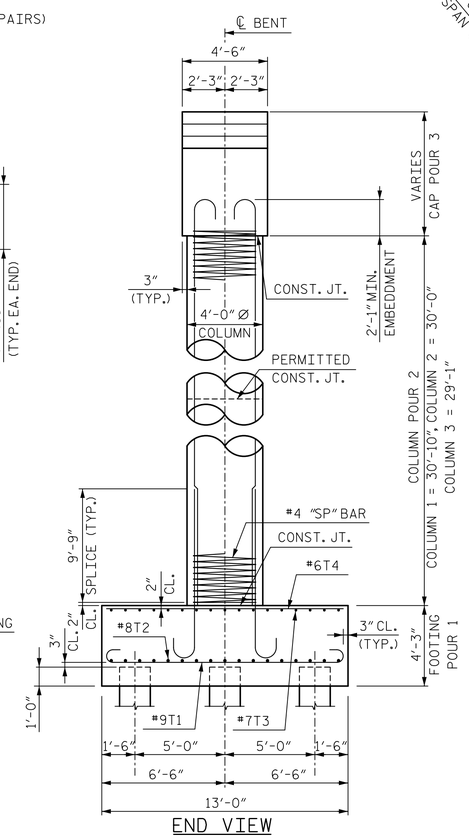


END VIEW

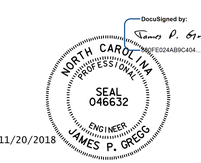


11/20/2018

PROJECT NO. R-1015

CRAVEN COUNTY

STATION: POC STA. 138+31.09 -L-

SHEET 1 OF 2

STATE OF NORTH CAROLINA
DEPARTMENT OF TRANSPORTATION
RALEIGH

SUBSTRUCTURE

BENT 3

RIGHT LANE

HNTB NORTH CAROLINA, P.C.
NC License No. C-1554
343 E. Six Forks Rd., Suite 200, Raleigh, N.C. 27609

DRAWN BY A. SMITH DATE 7/18
CHECKED BY B. NEUPANE DATE 9/18
DESIGN ENGINEER OF RECORD J. GREGG DATE 10/18

DWG. NO. 37

| REVISIONS | | | | | | SHEET NO. |
|---|---|---|---|---|---|---|
| NO. | BY | DATE | NO. | BY | DATE | S04-37 |
| 1 | | | 3 | | | TOTAL SHEETS |
| 2 | | | 4 | | | 46 |

DOCUMENT NOT CONSIDERED FINAL UNLESS ALL SIGNATURES COMPLETED

DocuSign Envelope ID: 88A0B777-7A2E-445F-ADAD-2E515F175E6D

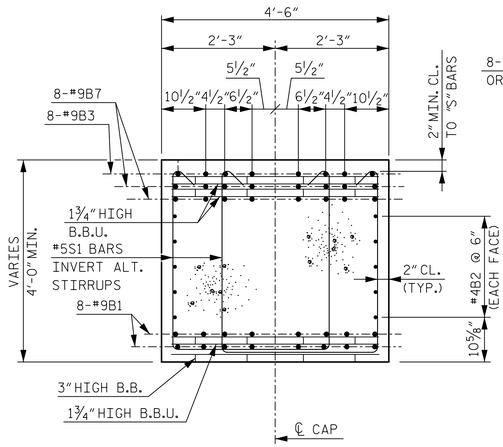


SECTION A-A

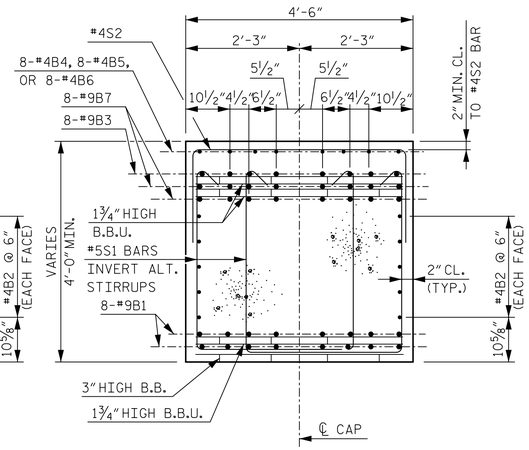


SECTION B-B

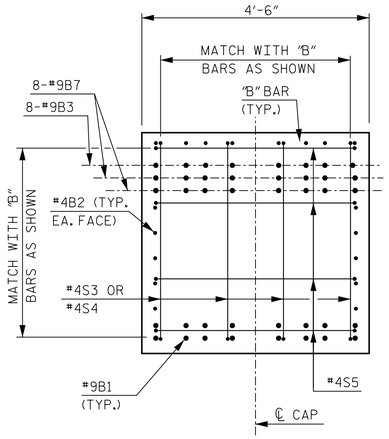


VIEW C-C

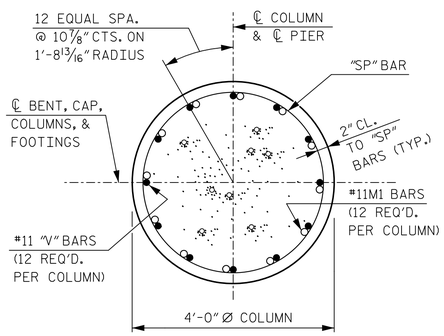


SECTION D-D

## BAR TYPES

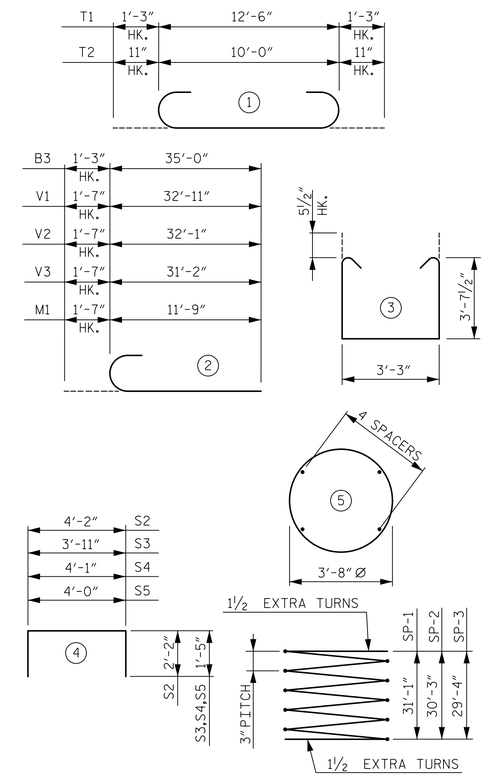


ALL BAR DIMENSIONS ARE OUT TO OUT

✳ THE SP-1, SP-2, AND SP-3 SPIRAL REINFORCING STEEL SHALL BE W20 OR D20 COLD DRAWN WIRE OR #4 PLAIN OR DEFORMED BAR.

## BILL OF REINFORCING

BENT 2

| BAR | NO. | SIZE | TYPE | LENGTH | WEIGHT |
|---|---|---|---|---|---|
| B1 | 32 | 9 | STR | 33'-9" | 3,672 |
| B2 | 30 | 4 | STR | 22'-2" | 444 |
| B3 | 16 | 9 | 2 | 36'-3" | 1,972 |
| B4 | 8 | 4 | STR | 5'-1" | 27 |
| B5 | 16 | 4 | STR | 13'-6" | 144 |
| B6 | 8 | 4 | STR | 13'-0" | 69 |
| B7 | 32 | 9 | STR | 35'-0" | 3,808 |
| M1 | 36 | 11 | 2 | 13'-4" | 2,550 |
| S1 | 222 | 5 | 3 | 11'-5" | 2,643 |
| S2 | 56 | 4 | 4 | 8'-6" | 318 |
| S3 | 4 | 4 | 4 | 6'-9" | 18 |
| S4 | 4 | 4 | 4 | 6'-11" | 18 |
| S5 | 8 | 4 | 4 | 6'-10" | 37 |
| T1 | 60 | 9 | 1 | 15'-0" | 3,060 |
| T2 | 51 | 8 | 1 | 11'-10" | 1,611 |
| T3 | 54 | 7 | STR | 10'-0" | 1,042 |
| T4 | 60 | 6 | STR | 12'-6" | 1,127 |
| V1 | 12 | 11 | 2 | 34'-6" | 2,200 |
| V2 | 12 | 11 | 2 | 33'-8" | 2,146 |
| V3 | 12 | 11 | 2 | 32'-9" | 2,088 |
| SP-1 | 1 | ✳ | 5 | 1467'-3" | 980 |
| SP-2 | 1 | ✳ | 5 | 1428'-10" | 954 |
| SP-3 | 1 | ✳ | 5 | 1386'-7" | 926 |

## QUANTITIES

| | | |
|---|---|---|
| REINFORCING STEEL | LBS. | 28,994 |
| SPIRAL COLUMN REINFORCING STEEL | LBS. | 2,860 |
| CLASS A CONCRETE | | |
| FOOTING POUR 1 | CU. YDS. | 64.5 |
| COLUMN POUR 2 | CU. YDS. | 41.8 |
| CAP POUR 3 | CU. YDS. | 44.6 |
| TOTAL | CU. YDS. | 150.9 |
| HP 12X53 STEEL PILES | NO. | 18 |
| | LIN FT. | 1,170 |
| PILE REDRIVES | EA. | 9 |
| PILE DRIVING EQUIPMENT SETUP | EA. | 18 |

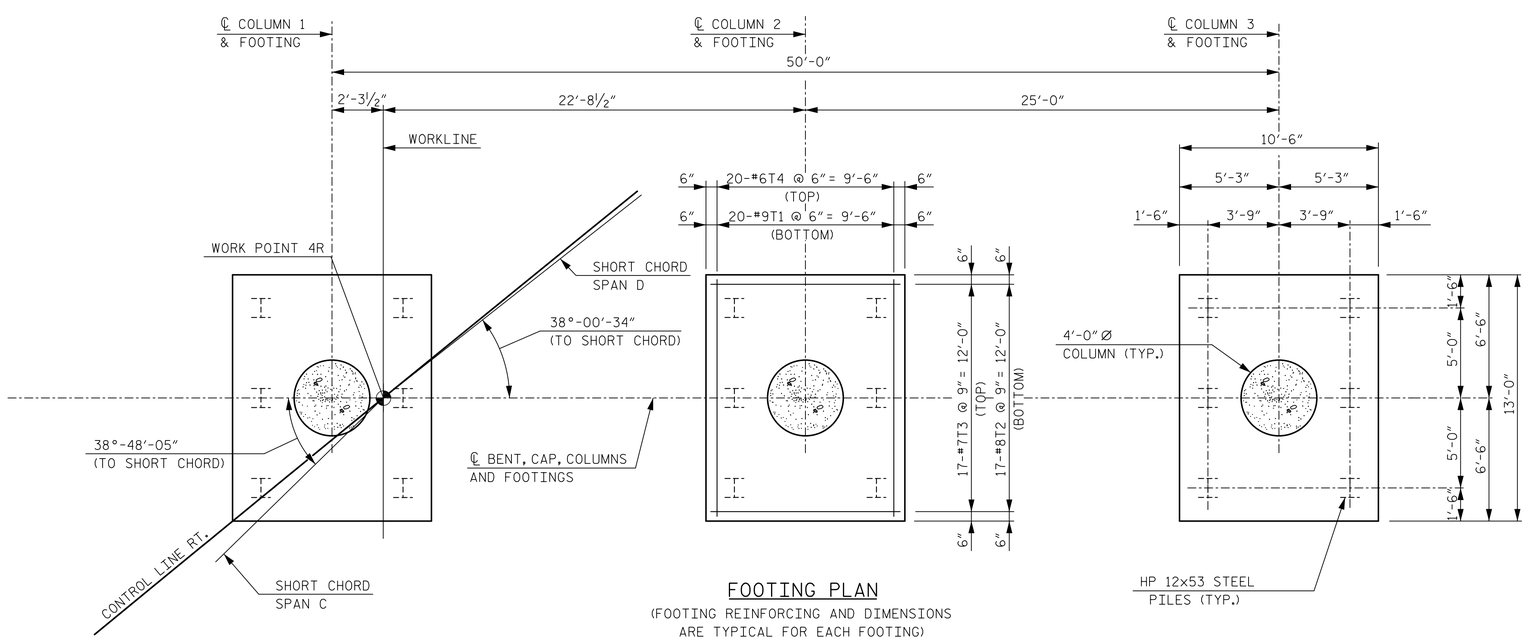


FOOTING PLAN

(FOOTING REINFORCING AND DIMENSIONS ARE TYPICAL FOR EACH FOOTING)

PROJECT NO. R-1015

CRAVEN COUNTY

STATION: POC STA. 138+31.09 -L-

SHEET 2 OF 2

STATE OF NORTH CAROLINA
DEPARTMENT OF TRANSPORTATION
RALEIGH

SUBSTRUCTURE

BENT 3

RIGHT LANE

DocuSigned by: J. P. Gregg 12/6/2018

NORTH CAROLINA PROFESSIONAL SEAL 046632 ENGINEER JAMES P. GREGG

DOCUMENT NOT CONSIDERED FINAL UNLESS ALL SIGNATURES COMPLETED

HNTB NORTH CAROLINA, P.C.
NC License No. C-1554
343 E. Six Forks Rd., Suite 200, Raleigh, N.C. 27609

DRAWN BY A. SMITH DATE 7/18
CHECKED BY B. NEUPANE DATE 9/18
DESIGN ENGINEER OF RECORD J. GREGG DATE 10/18

DWG. NO. 38

| REVISIONS | | | | | | SHEET NO. |
|---|---|---|---|---|---|---|
| NO. | BY | DATE | NO. | BY | DATE | S04-38 |
| 1 | | | 3 | | | TOTAL SHEETS |
| 2 | | | 4 | | | 46 |

DocuSign Envelope ID: 11A1261F-14B1-49AE-A388-908A64E11071

NOTES:

FOR NOTES AND PILE SPLICE DETAILS, SEE SHEET 3 OF 3.

FOR WINGWALL DETAILS AND SECTION A-A, SEE SHEET 2 OF 3.

INDICATES 3:12 PILE BATTER IN DIRECTION SHOWN.

| TOP OF PILE ELEVATIONS | |
|---|---|
| PILE | ELEVATION |
| 1 | 47.69 |
| 2 | 47.46 |
| 3 | 47.23 |
| 4 | 47.00 |
| 5 | 46.77 |
| 6 | 46.54 |
| 7 | 46.31 |
| 8 | 46.07 |
| 9 | 45.84 |
| 10 | 45.61 |
| 11 | 45.38 |
| 12 | 45.15 |
| 13 | 44.92 |

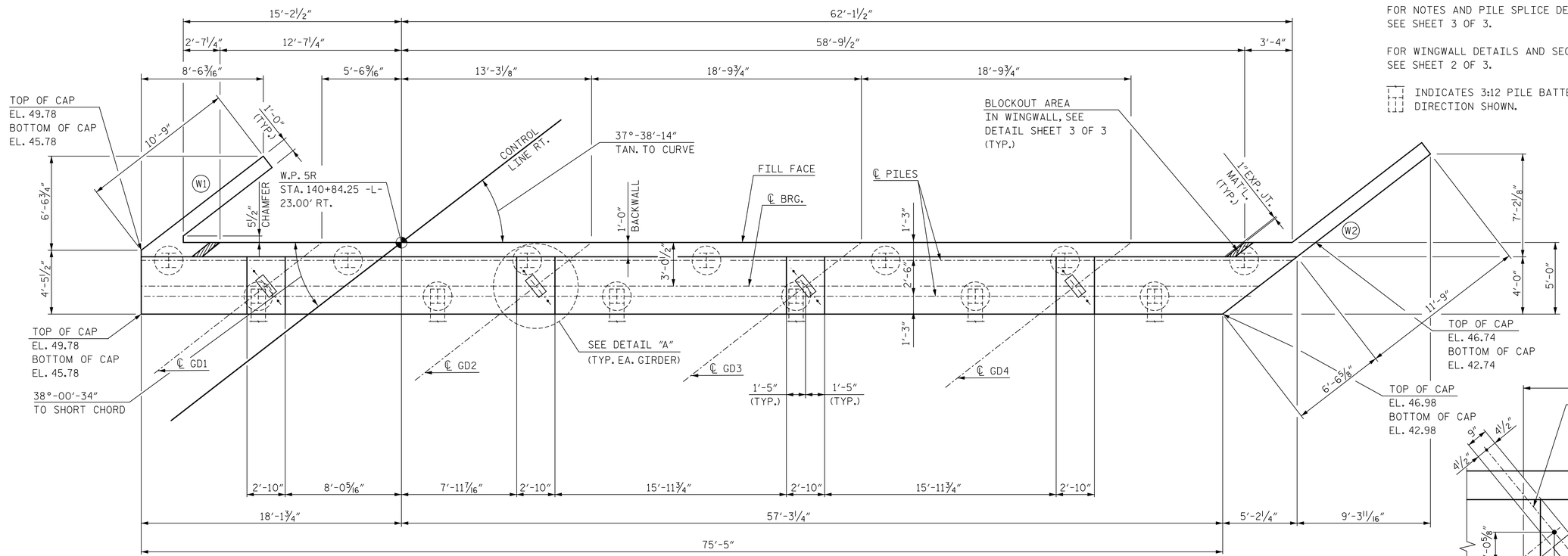


PLAN

72-#5V1 @ 1'-0" = 71'-0" (FILL FACE OF BACKWAL)
72-#5V1 @ 1'-0" = 71'-0" (FRONT FACE OF BACKWALL)
72-#4S5 @ 1'-0" = 71'-0" (TOP OF BACKWALL)

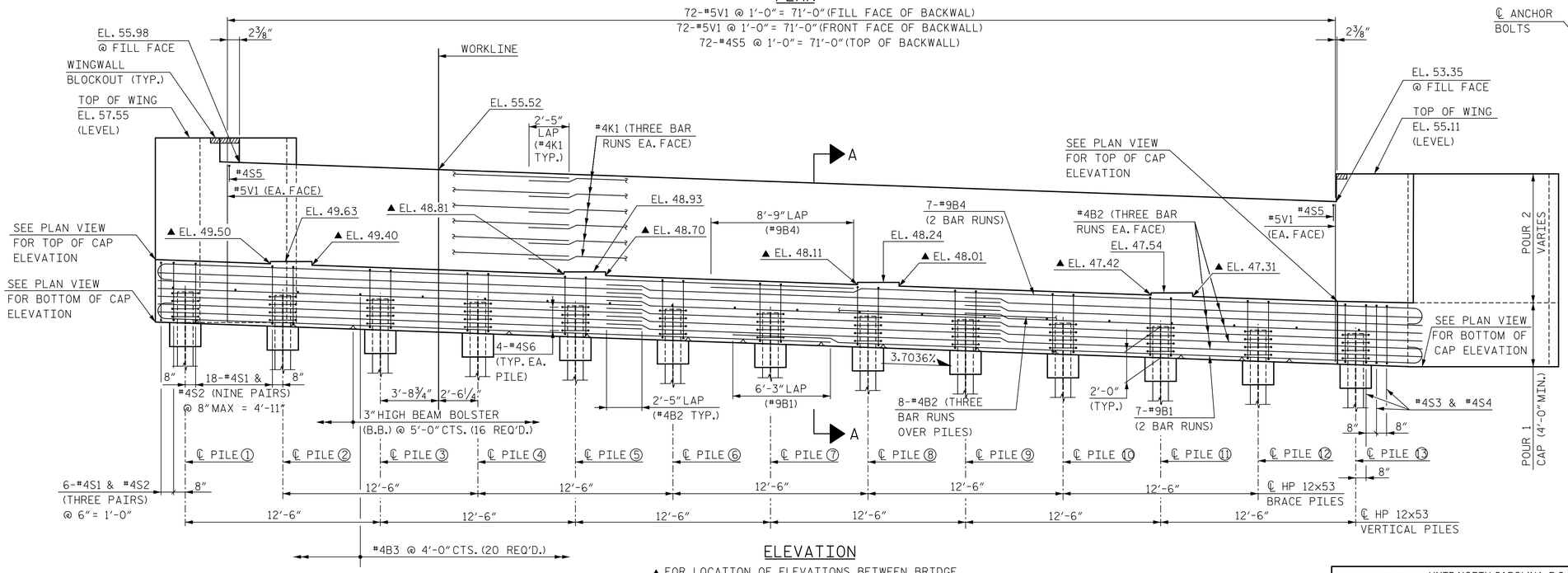


ELEVATION

▲ FOR LOCATION OF ELEVATIONS BETWEEN BRIDGE SEATS, SEE SECTION A-A, SHEET 2 OF 3.

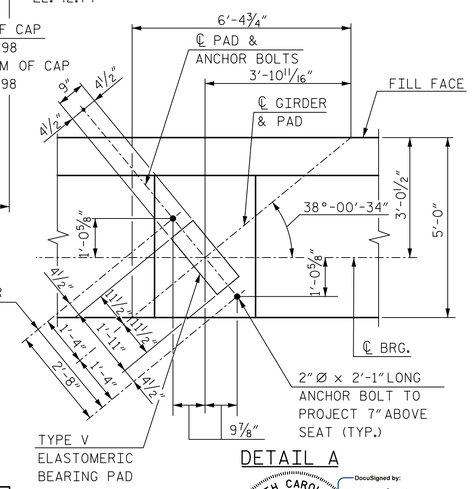


DETAIL A

NORTH CAROLINA PROFESSIONAL SEAL 046632 ENGINEER JAMES P. GREGG

DocuSigned by: James P. Gregg 980FE024AB9C404...

11/20/2018

PROJECT NO. R-1015

CRAVEN COUNTY

STATION: POC STA. 138+31.09 -L-

SHEET 1 OF 3

STATE OF NORTH CAROLINA
DEPARTMENT OF TRANSPORTATION
RALEIGH

SUBSTRUCTURE

END BENT 2

RIGHT LANE

HNTB NORTH CAROLINA, P.C.
NC License No. C-1554
343 E. Six Forks Rd., Suite 200, Raleigh, N.C. 27609

DRAWN BY B. NEUPANE DATE 9/18
CHECKED BY E. JOWZA DATE 10/18
DESIGN ENGINEER OF RECORD J. GREGG DATE 10/18

DWG. NO. 39

DOCUMENT NOT CONSIDERED FINAL UNLESS ALL SIGNATURES COMPLETED

| REVISIONS | | | | | | SHEET NO. |
|---|---|---|---|---|---|---|
| NO. | BY | DATE | NO. | BY | DATE | S04-39 |
| 1 | | | 3 | | | TOTAL SHEETS |
| 2 | | | 4 | | | 46 |

DocuSign Envelope ID: 11A1261F-14B1-49AE-A388-908A64E11071

NOTES:

FOR NOTES, SEE SHEET 3 OF 3.
FOR BLOCKOUT IN WINGWALL, SEE SHEET 3 OF 3.

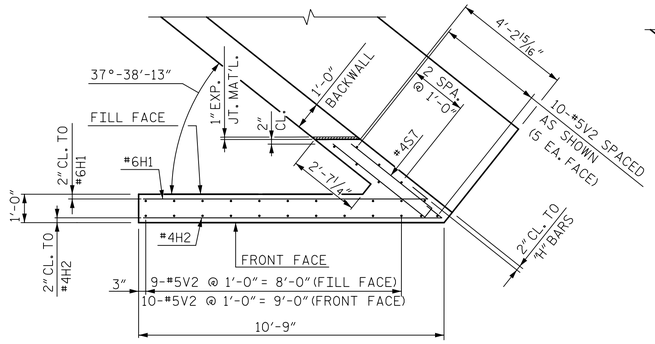


W1 PLAN OF WING

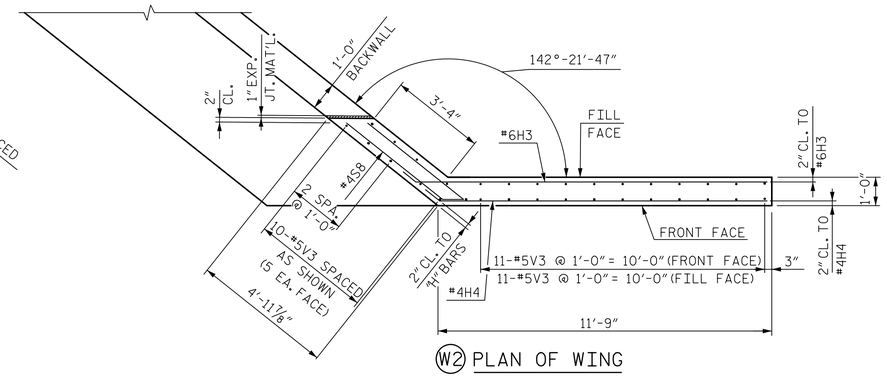


W2 PLAN OF WING

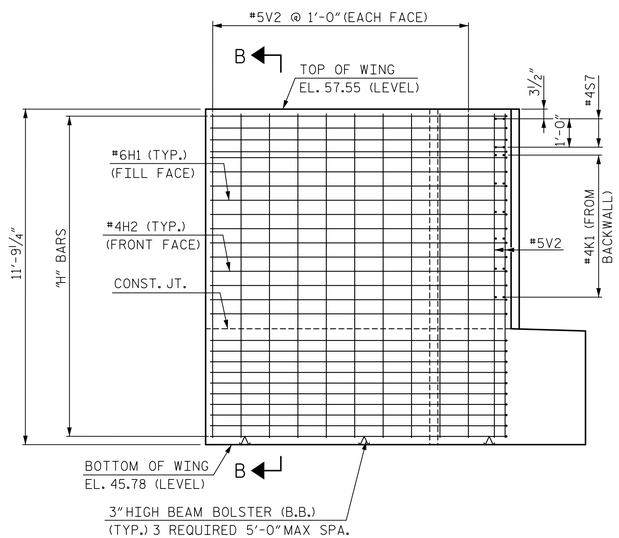


W1 ELEVATION OF WING

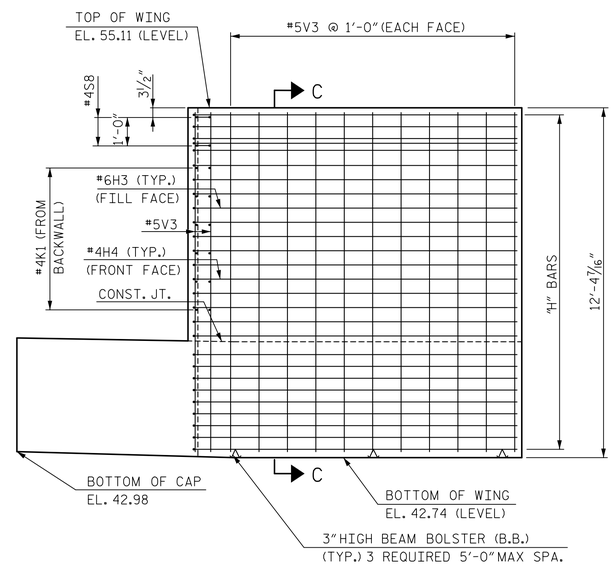


W2 ELEVATION OF WING

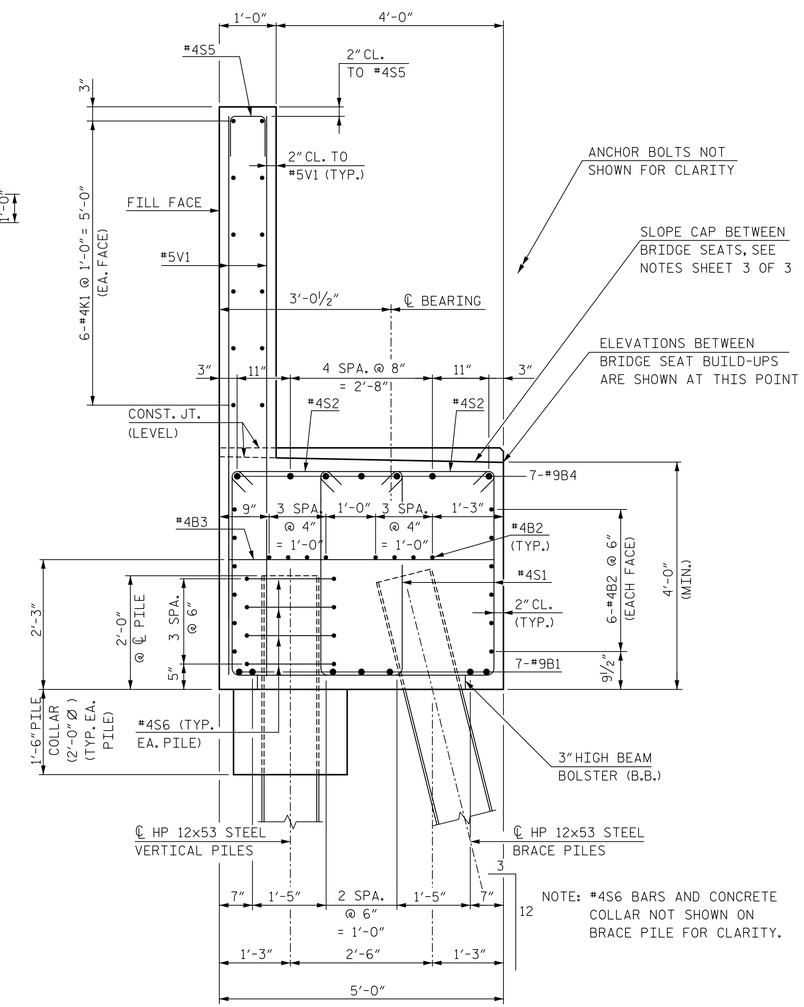


NOTE: #4S6 BARS AND CONCRETE COLLAR NOT SHOWN ON BRACE PILE FOR CLARITY.

SECTION A-A

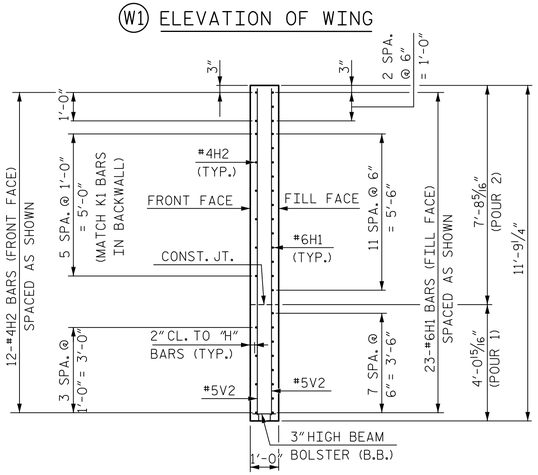


SECTION B-B

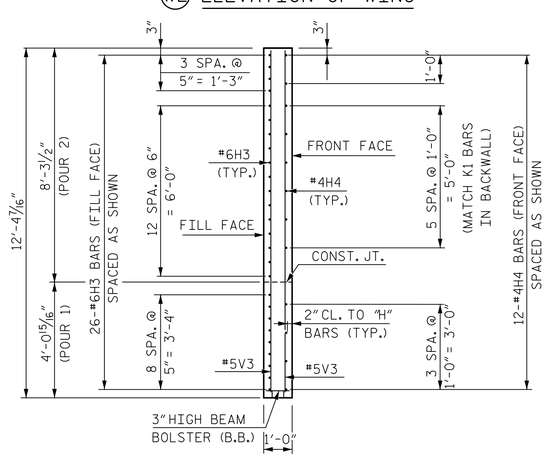


SECTION C-C

PROJECT NO. R-1015

CRAVEN COUNTY

STATION: POC STA. 138+31.09 -L-

SHEET 2 OF 3

DocuSigned by: James P. Gregg
DocuSign Envelope ID: 11A1261F-14B1-49AE-A388-908A64E11071

NORTH CAROLINA PROFESSIONAL SEAL 046632 ENGINEER JAMES P. GREGG

11/20/2018

STATE OF NORTH CAROLINA
DEPARTMENT OF TRANSPORTATION
RALEIGH

SUBSTRUCTURE

END BENT 2

RIGHT LANE

HNTB NORTH CAROLINA, P.C.
NC License No. C-1554
343 E. Six Forks Rd., Suite 200, Raleigh, N.C. 27609

DRAWN BY B. NEUPANE DATE 9/18
CHECKED BY E. JOWZA DATE 10/18
DESIGN ENGINEER OF RECORD J. GREGG DATE 10/18

DWG. NO. 40

DOCUMENT NOT CONSIDERED FINAL UNLESS ALL SIGNATURES COMPLETED

| REVISIONS | | | | | | SHEET NO. |
|---|---|---|---|---|---|---|
| NO. | BY | DATE | NO. | BY | DATE | S04-40 |
| 1 | | | 3 | | | TOTAL SHEETS |
| 2 | | | 4 | | | 46 |

DocuSign Envelope ID: 88A0B777-7A2E-445F-ADAD-2E515F175E6D

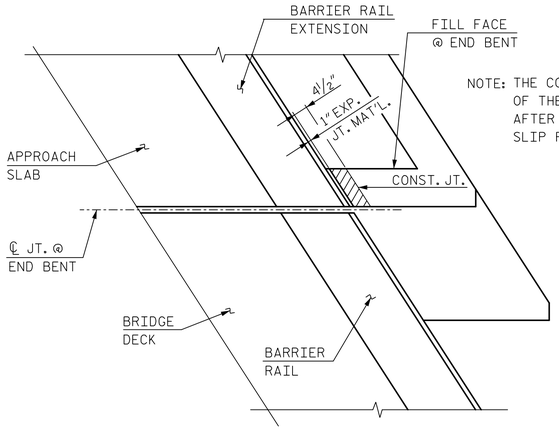


NOTE: THE CONCRETE IN THE SHADED AREA OF THE WING SHALL BE POURED AFTER BARRIER RAILS ARE CAST IF SLIP FORMING IS USED.

PLAN

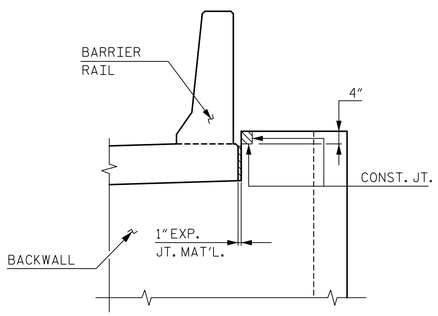


ELEVATION

BLOCKOUT IN WINGWALL

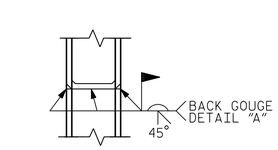


*PILE VERTICAL

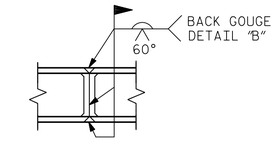


*PILE HORIZONTAL OR VERTICAL

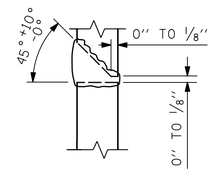


DETAIL "A"

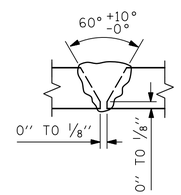


DETAIL "B"

* POSITION OF PILE DURING WELDING.

## PILE SPLICE DETAILS

NOTES:

STIRRUPS IN CAP MAY BE SHIFTED AS NECESSARY TO CLEAR ANCHOR BOLTS.

BACKWALL SHALL BE PLACED BEFORE APPLYING THE EPOXY PROTECTIVE COATING.

THE TOP SURFACE AREAS OF THE END BENT CAPS SHALL BE CURED IN ACCORDANCE WITH THE STANDARD SPECIFICATIONS EXCEPT THE MEMBRANE CURING COMPOUND METHOD SHALL NOT BE USED.

THE TOP SURFACE OF THE END BENT CAP EXCEPT THE BRIDGE SEAT BUILDUPS SHALL BE SLOPED TRANSVERSELY FROM THE FILL FACE TO THE BACK FACE AT THE RATE OF 2%.

## BAR TYPES

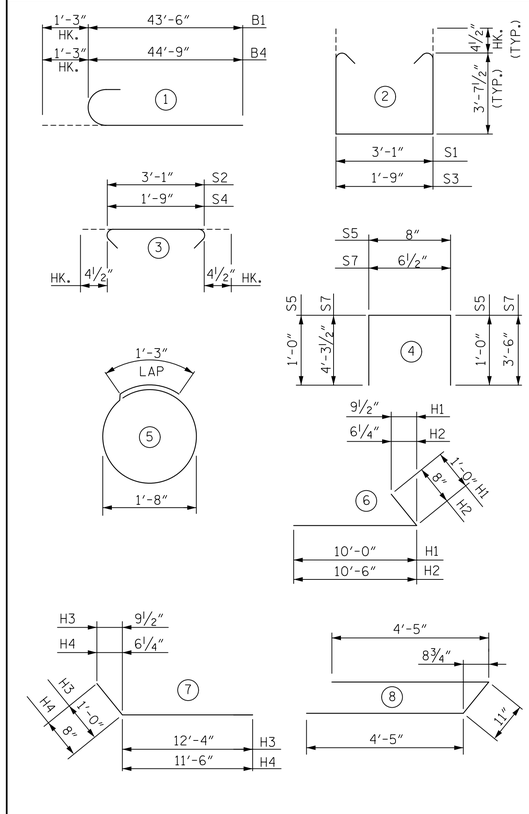


ALL BAR DIMENSIONS ARE OUT TO OUT

## BILL OF REINFORCING

END BENT 2

| BAR | NO. | SIZE | TYPE | LENGTH | WEIGHT |
|---|---|---|---|---|---|
| B1 | 14 | 9 | 1 | 44'-9" | 2,130 |
| B2 | 60 | 4 | STR | 28'-6" | 1,142 |
| B3 | 20 | 4 | STR | 4'-8" | 62 |
| B4 | 14 | 9 | 1 | 46'-0" | 2,190 |
| H1 | 23 | 6 | 6 | 11'-0" | 380 |
| H2 | 12 | 4 | 6 | 11'-2" | 90 |
| H3 | 26 | 6 | 7 | 13'-4" | 521 |
| H4 | 12 | 4 | 7 | 12'-2" | 98 |
| K1 | 36 | 4 | STR | 28'-6" | 685 |
| S1 | 222 | 4 | 2 | 11'-1" | 1,644 |
| S2 | 222 | 4 | 3 | 3'-10" | 568 |
| S3 | 3 | 4 | 2 | 9'-9" | 20 |
| S4 | 3 | 4 | 3 | 2'-6" | 5 |
| S5 | 72 | 4 | 4 | 2'-8" | 128 |
| S6 | 52 | 4 | 5 | 6'-6" | 226 |
| S7 | 2 | 4 | 8 | 8'-4" | 11 |
| S8 | 2 | 4 | 4 | 9'-6" | 13 |
| V1 | 144 | 5 | STR | 9'-10" | 1,477 |
| V2 | 29 | 5 | STR | 11'-4" | 343 |
| V3 | 32 | 5 | STR | 11'-11" | 398 |

## QUANTITIES

| | | |
|---|---|---|
| REINFORCING STEEL | LBS. | 12,131 |
| CLASS "A" CONCRETE BREAKDOWN | | |
| POUR 1 - CAP, COLLARS & BOT. OF WINGS | CU. YDS. | 64.9 |
| POUR 2 - TOP OF WINGS & BACKWALL | CU. YDS. | 25.8 |
| TOTAL | CU. YDS. | 90.7 |
| HP 12x53 STEEL PILES | NO. | 13 |
| | LIN. FT. | 1300 |
| PILE REDRIVES | EA. | 6 |
| PILE DRIVING EQUIPMENT SETUP | EA. | 13 |

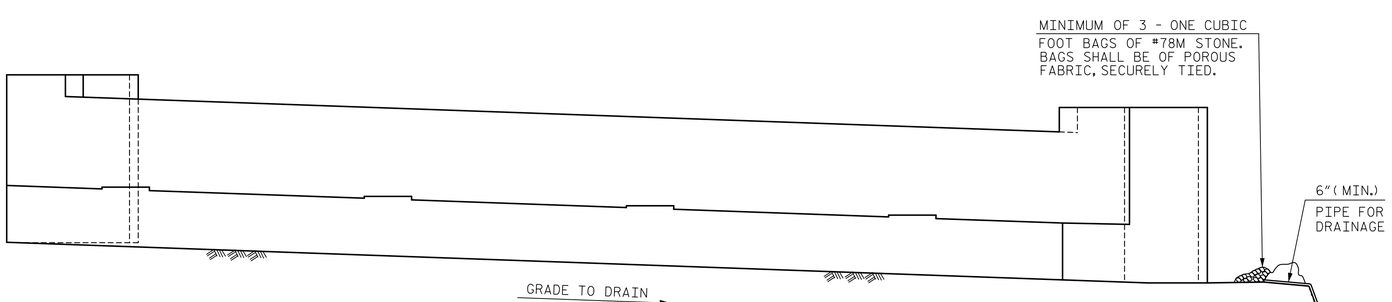


BAGGED STONE AND PIPE SHALL BE PLACED IMMEDIATELY AFTER COMPLETION OF END BENT EXCAVATION. PIPE MAY BE EITHER CONCRETE, CORRUGATED STEEL, CORRUGATED ALUMINUM ALLOY OR CORRUGATED PLASTIC. PERFORATED PIPE WILL NOT BE ALLOWED.

BAGGED STONE SHALL REMAIN IN PLACE UNTIL THE ENGINEER DIRECTS THAT IT BE REMOVED. THE CONTRACTOR SHALL REMOVE AND DISPOSE OF SILT ACCUMULATIONS AT BAGGED STONE WHEN SO DIRECTED BY THE ENGINEER. BAGS SHALL BE REMOVED AND REPLACED WHENEVER THE ENGINEER DETERMINES THAT THEY HAVE DETERIORATED AND LOST THEIR EFFECTIVENESS.

NO SEPARATE PAYMENT WILL BE MADE FOR THIS WORK AND THE ENTIRE COST OF THIS WORK SHALL BE INCLUDED IN THE UNIT CONTRACT PRICE FOR THE SEVERAL PAY ITEMS.

TEMPORARY DRAINAGE AT END BENT 2

PROJECT NO. R-1015

CRAVEN COUNTY

STATION: POC STA. 138+31.09 -L-

SHEET 3 OF 3

DocuSigned by: James P. Gregg

NORTH CAROLINA PROFESSIONAL SEAL 046632 ENGINEER JAMES P. GREGG

12/6/2018

HNTB

HNTB NORTH CAROLINA, P.C.
NC License No. C-1554
343 E. Six Forks Rd., Suite 200, Raleigh, N.C. 27609

DRAWN BY B. NEUPANE DATE 9/18
CHECKED BY E. JOWZA DATE 10/18
DESIGN ENGINEER OF RECORD J. GREGG DATE 10/18

DWG. NO. 41

DOCUMENT NOT CONSIDERED FINAL UNLESS ALL SIGNATURES COMPLETED

STATE OF NORTH CAROLINA
DEPARTMENT OF TRANSPORTATION
RALEIGH

SUBSTRUCTURE

END BENT 2

RIGHT LANE

| REVISIONS | | | | | | SHEET NO. |
|---|---|---|---|---|---|---|
| NO. | BY | DATE | NO. | BY | DATE | S04-41 |
| 1 | | | 3 | | | TOTAL SHEETS |
| 2 | | | 4 | | | 46 |

DocuSign Envelope ID: 11A1261F-14B1-49AE-A388-908A64E11071

SLOPE PROTECTION SHALL CONSIST OF 4'' POURED-IN-PLACE CONCRETE PAVING AS SHOWN IN THE DETAILS ON THIS SHEET. CONCRETE SHALL BE CLASS ''B''. THE CONCRETE SURFACE SHALL BE FLOATED WITH A WOODEN FLOAT AND FINISHED. WELDED WIRE FABRIC REINFORCING SHALL BE 6 X 6 - W1.4 X W1.4, 60'' WIDE. SLOPE PROTECTION SHALL BE POURED IN 5' STRIPS AS SHOWN IN THE ''POURING DETAIL'' WITH 2'-0" LONG #4 BARS PLACED ALONG THE SLOPE BETWEEN STRIPS AT 1'-6" MAXIMUM SPACING. SLOPE PROTECTION MAY BE POURED IN ALTERNATE 4' AND 5' STRIPS AS SHOWN IN THE ''OPTIONAL POURING DETAIL'' WITH ADJACENT RUNS OF WELDED WIRE FABRIC LAPPING AT LEAST 6''. THE COST OF THE WELDED WIRE FABRIC AND #4 BARS, IF USED, SHALL BE INCLUDED IN THE CONTRACT UNIT PRICE BID PER SQUARE YARD FOR SLOPE PROTECTION.

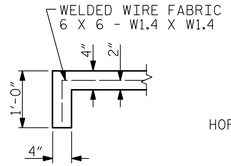


SECTION A-A

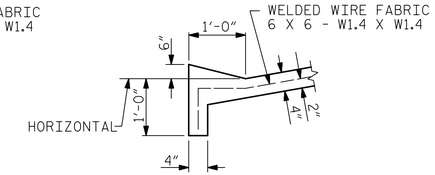


SECTION B-B

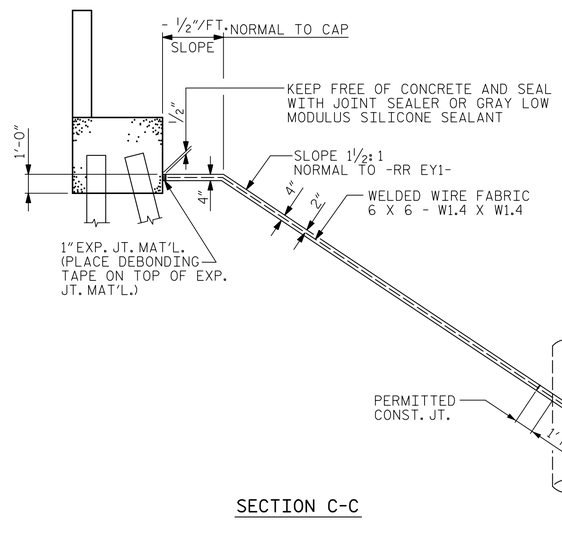


SECTION C-C

| RT BRIDGE @ POC STA 138+31.09 -L- | 4 INCH SLOPE PROTECTION | ✳ WELDED WIRE FABRIC 60 INCHES WIDE |
|---|---|---|
| | SQUARE YARDS | APPROX. L.F. |
| END BENT 1 | 1342.4 | 2416 |
| END BENT 2 | 1402.5 | 2524 |

✳ QUANTITY SHOWN IS BASED ON 5' POURS.

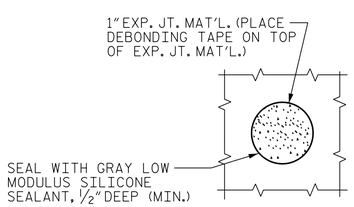


PLAN WHERE CONCRETE SLOPE PROTECTION MUST BE PLACED AROUND A BENT COLUMN

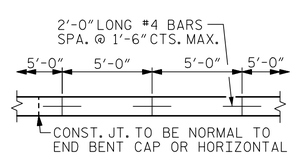


STRIP WIDTHS MAY VARY IN CURVED PORTION.

POURING DETAIL

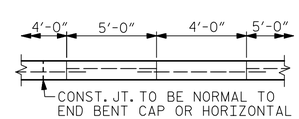


POUR A 4'-0'' STRIP FIRST. STRIP WIDTHS MAY VARY IN CURVED PORTION.

OPTIONAL POURING DETAIL

PROJECT NO. R-1015

CRAVEN COUNTY

STATION: POC STA. 138+31.09 -L-

SHEET 1 OF 2

STATE OF NORTH CAROLINA
DEPARTMENT OF TRANSPORTATION
RALEIGH

STANDARD

SLOPE PROTECTION DETAILS

RIGHT LANE

DocuSigned by: James P. Gregg
DocuSign Envelope ID: 0324AB9C-404...

NORTH CAROLINA PROFESSIONAL SEAL 046632 ENGINEER JAMES P. GREGG

11/20/2018

| ASSEMBLED BY : A. SMITH | DATE : 7/18 |
|---|---|
| CHECKED BY : B. NEUPANE | DATE : 10/18 |

| DRAWN BY : ELR 5/92 | REV. 12/21/11 MAA/GM |
|---|---|
| CHECKED BY : GRP 6/92 | REV. 1/16 MAA/TMG |
| | REV. 12/17 MAA/THC |

DOCUMENT NOT CONSIDERED FINAL UNLESS ALL SIGNATURES COMPLETED

HNTB

HNTB NORTH CAROLINA, P.C.
NC License No. C-1554
343 E. Six Forks Rd., Suite 200, Raleigh, N.C. 27609

| DRAWN BY | A. SMITH | DATE | 7/18 |
|---|---|---|---|
| CHECKED BY | B. NEUPANE | DATE | 10/18 |
| DESIGN ENGINEER OF RECORD | J. GREGG | DATE | 10/18 |

DWG. NO. 42

| REVISIONS | | | | | | SHEET NO. |
|---|---|---|---|---|---|---|
| NO. | BY | DATE | NO. | BY | DATE | S04-42 |
| 1 | | | 3 | | | TOTAL SHEETS |
| 2 | | | 4 | | | 46 |

DocuSign Envelope ID: 11A1261F-14B1-49AE-A388-908A64E11071

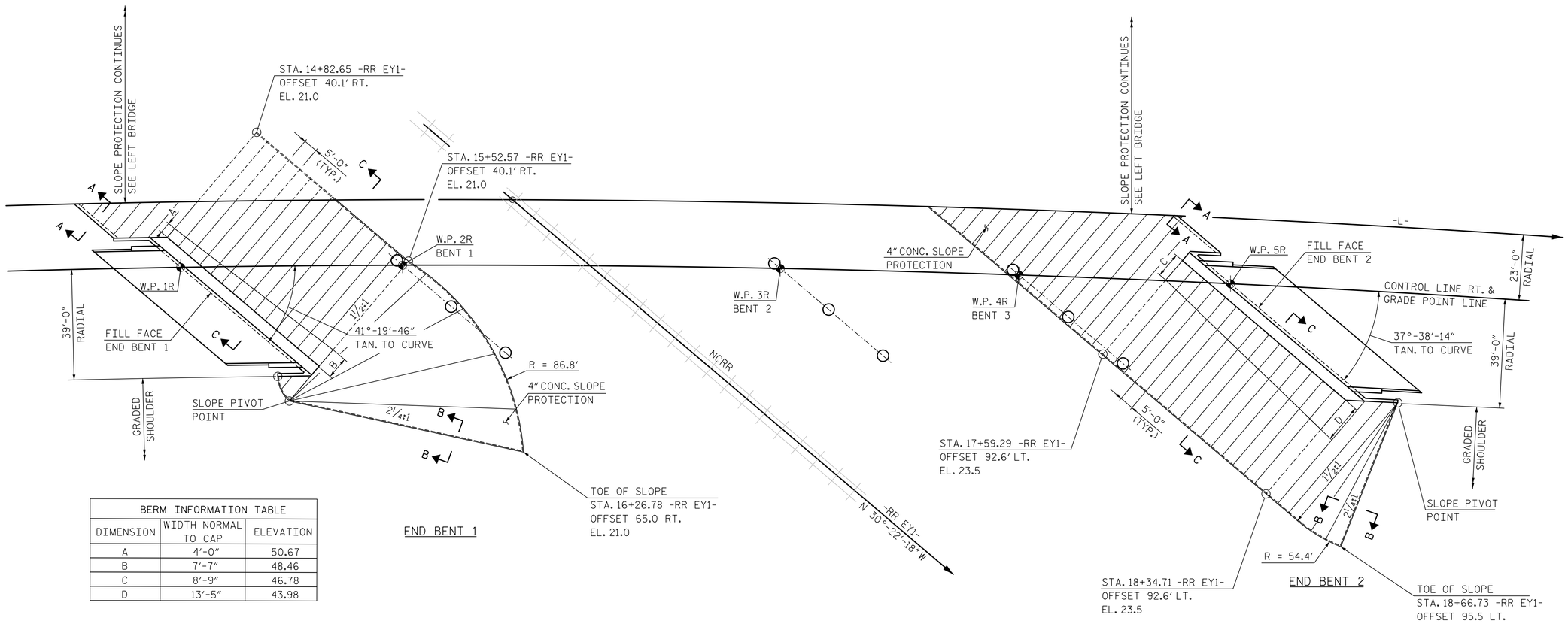


PLAN

| BERM INFORMATION TABLE | | |
|---|---|---|
| DIMENSION | WIDTH NORMAL TO CAP | ELEVATION |
| A | 4'-0" | 50.67 |
| B | 7'-7" | 48.46 |
| C | 8'-9" | 46.78 |
| D | 13'-5" | 43.98 |

**PROJECT NO.** R-1015

CRAVEN **COUNTY**

**STATION:** POC STA. 138+31.09 -L-

SHEET 2 OF 2

DocuSigned by:
James P. Gregg
B8FE024ABBC404...

NORTH CAROLINA PROFESSIONAL SEAL 046632 ENGINEER JAMES P. GREGG

11/20/2018

STATE OF NORTH CAROLINA
DEPARTMENT OF TRANSPORTATION
RALEIGH

SLOPE PROTECTION DETAILS

RIGHT LANE

HNTB NORTH CAROLINA, P.C.
NC License No. C-1554
343 E. Six Forks Rd., Suite 200, Raleigh, N.C. 27609

DRAWN BY A. SMITH DATE 7/18
CHECKED BY B. NEUPANE DATE 10/18
DESIGN ENGINEER OF RECORD J. GREGG DATE 10/18

DWG. NO. 43

| REVISIONS | | | | | | SHEET NO. |
|---|---|---|---|---|---|---|
| NO. | BY | DATE | NO. | BY | DATE | S04-43 |
| 1 | | | 3 | | | TOTAL SHEETS |
| 2 | | | 4 | | | 46 |

**DOCUMENT NOT CONSIDERED FINAL UNLESS ALL SIGNATURES COMPLETED**

DocuSign Envelope ID: 11A1261F-14B1-49AE-A388-908A64E11071

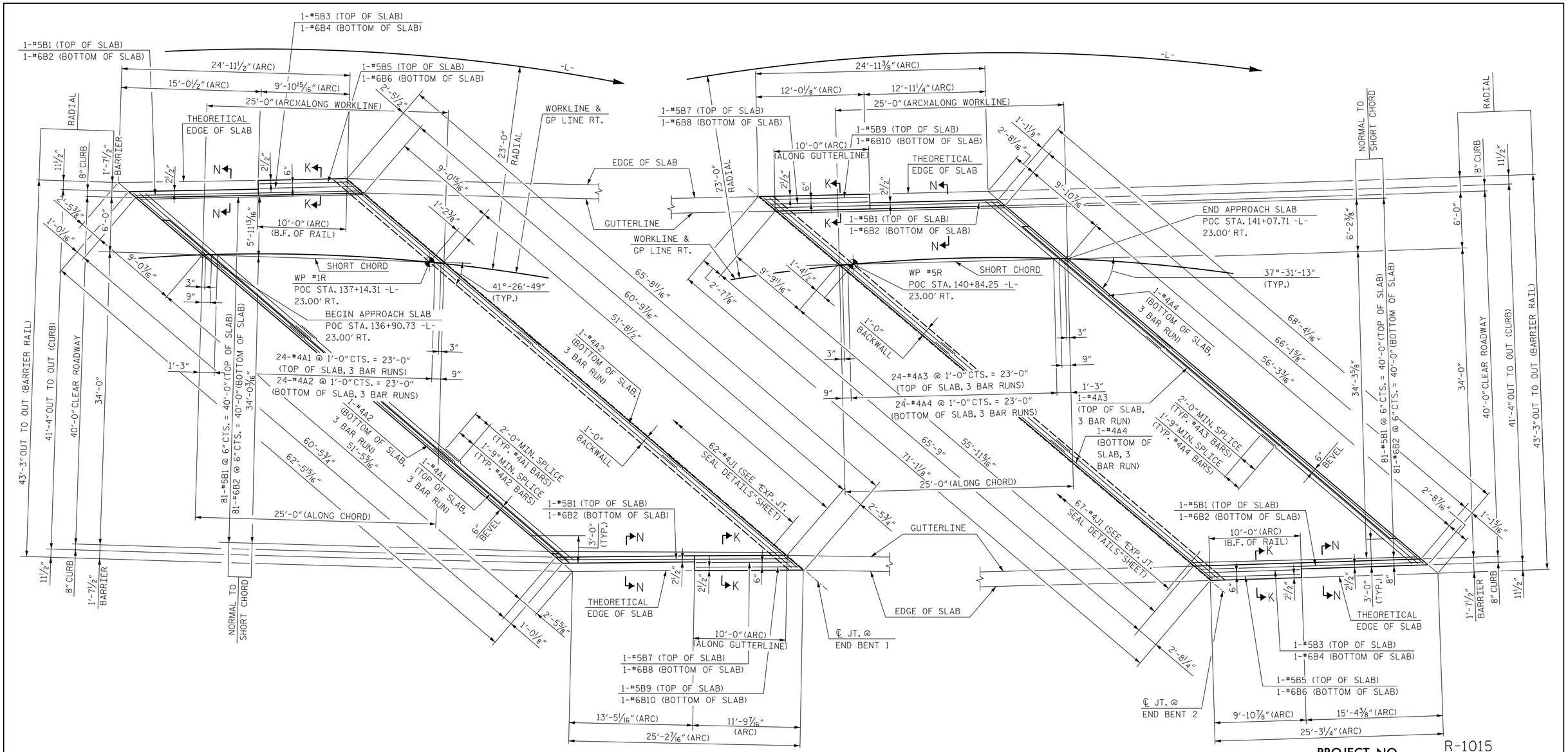


PLAN @ END BENT 1

-L- AND WORKLINE EXAGERATED

PLAN @ END BENT 2

-L- AND WORKLINE EXAGERATED

B.F. - DENOTES BACK FACE

**PROJECT NO.** R-1015

CRAVEN **COUNTY**

**STATION:** POC STA. 138+31.09 -L-

SHEET 1 OF 3

NOTES:

FOR SECTION N-N AND K-K, SEE "BRIDGE APPROACH SLAB FOR FLEXIBLE PAVEMENT" SHEET 2 OF 3.

FOR APPROACH SLAB BILL OF MATERIAL, SEE "BRIDGE APPROACH SLAB FOR FLEXIBLE PAVEMENT" SHEET 2 OF 3.

FOR BARRIER RAIL REINFORCING STEEL PLACEMENT AND BILL OF MATERIAL, SEE "BRIDGE APPROACH SLAB DETAILS" SHEET 3 OF 3.

FOR STANDARD EXPANSION JOINT SEAL DETAILS, SEE "EXPANSION JOINT SEAL DETAILS" SHEET.

**DOCUMENT NOT CONSIDERED FINAL UNLESS ALL SIGNATURES COMPLETED**

DocuSigned by: James P. Gregg 8DFEE024ABBC404...

NORTH CAROLINA PROFESSIONAL SEAL 046632 ENGINEER JAMES P. GREGG

11/20/2018

HNTB

HNTB NORTH CAROLINA, P.C.
NC License No. C-1554
343 E. Six Forks Rd., Suite 200, Raleigh, N.C. 27609

| | | | |
|---|---|---|---|
| DRAWN BY | A. SMITH | DATE | 7/18 |
| CHECKED BY | Z. GUO | DATE | 10/18 |
| DESIGN ENGINEER OF RECORD | J. GREGG | DATE | 10/18 |

DWG. NO. 44

STATE OF NORTH CAROLINA
**DEPARTMENT OF TRANSPORTATION**
RALEIGH

# BRIDGE APPROACH SLAB FOR FLEXIBLE PAVEMENT

## RIGHT LANE

REVISIONS

| NO. | BY | DATE | NO. | BY | DATE |
|---|---|---|---|---|---|
| 1 | | | 3 | | |
| 2 | | | 4 | | |

SHEET NO. S04-44

TOTAL SHEETS 46

DocuSign Envelope ID: 11A1261F-14B1-49AE-A388-908A64E11071

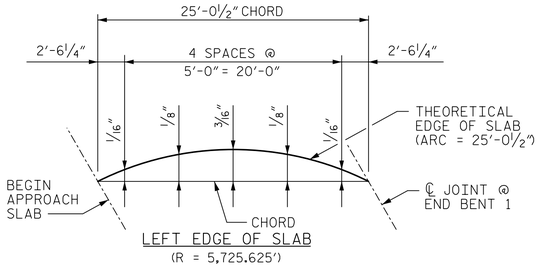


LEFT EDGE OF SLAB
(R = 5,725.625')

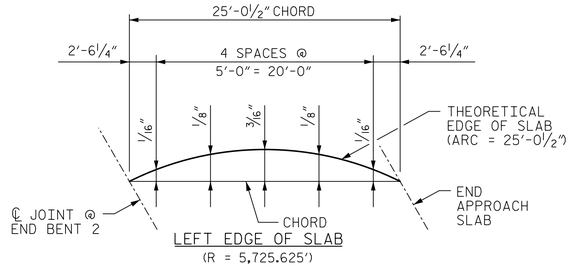


LEFT EDGE OF SLAB
(R = 5,725.625')

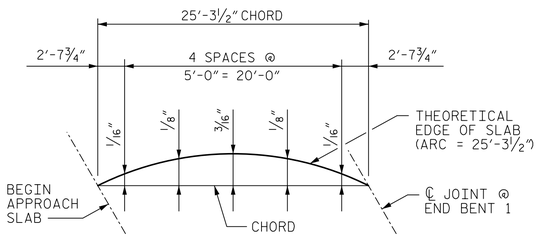


RIGHT EDGE OF SLAB
(R = 5,682.375')

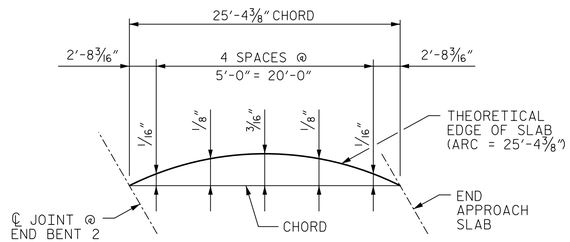


RIGHT EDGE OF SLAB
(R = 5,682.375')

CURVE OFFSETS - APPROACH SLAB AT END BENT 1

CURVE OFFSETS - APPROACH SLAB AT END BENT 2

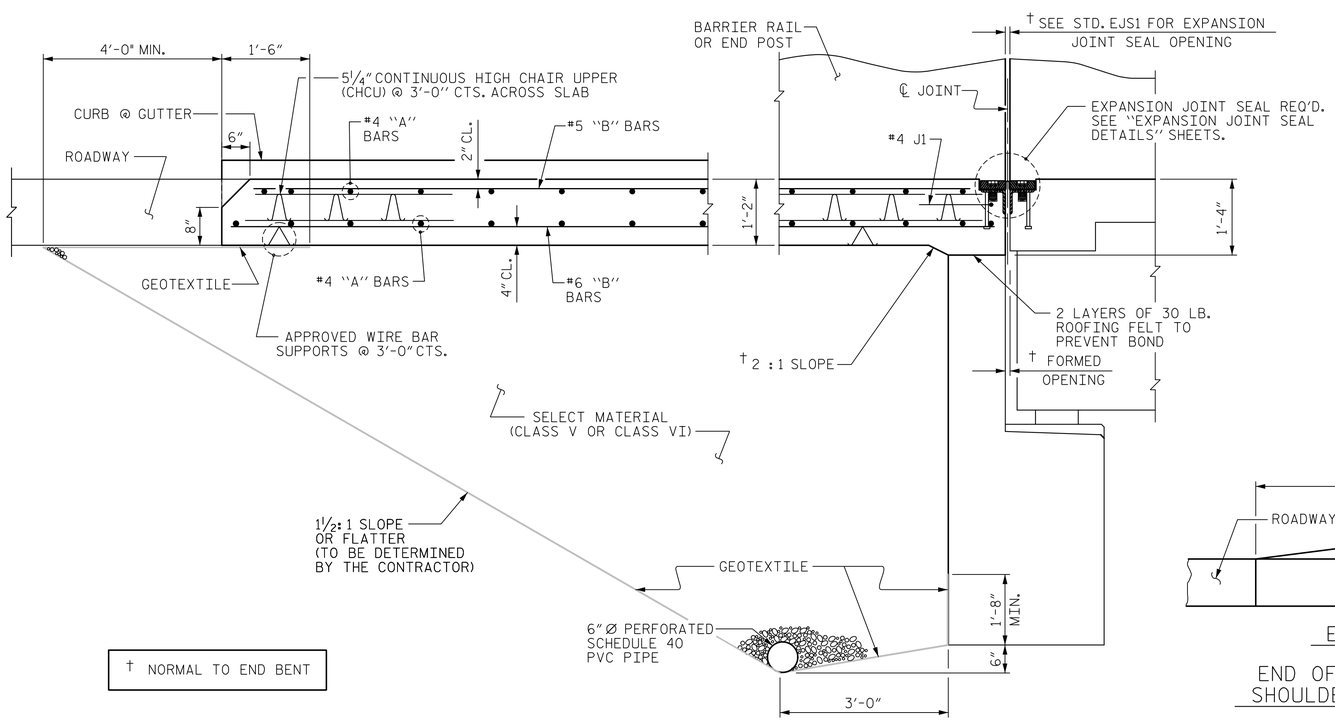


† NORMAL TO END BENT

SECTION THRU SLAB
(TYPE I - STANDARD APPROACH FILL)

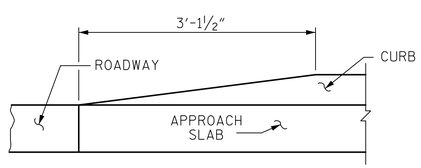


ELEVATION

END OF CURB WITHOUT SHOULDER BERM GUTTER

CURB DETAILS

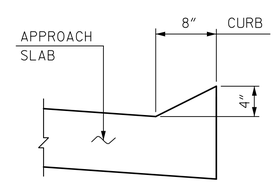


SECTION N-N

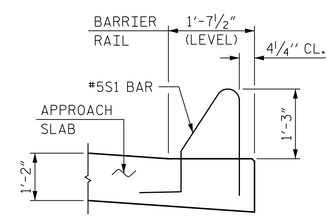


SECTION K-K

## NOTES

FOR BRIDGE APPROACH FILL INCLUDING GEOTEXTILE, 6" Ø DRAINAGE PIPE, AND SELECT MATERIAL BACKFILL, SEE ROADWAY PLANS.

GEOTEXTILE SHALL BE TYPE 1 IN ACCORDANCE WITH THE STANDARD SPECIFICATIONS SECTION 1056.

SELECT MATERIAL BACKFILL (CLASS V OR CLASS VI) SHALL BE IN ACCORDANCE WITH STANDARD SPECIFICATIONS SECTION 1016.

SELECT MATERIAL BACKFILL IS TO BE CONTINUOUS ALONG FILL FACE OF BACKWALL FROM OUTSIDE EDGE TO OUTSIDE EDGE OF APPROACH SLAB.

APPROACH SLAB SHALL NOT BE CONSTRUCTED PRIOR TO COMPLETION OF THE BRIDGE DECK.

THE JOINT SHALL BE SAWED PRIOR TO THE CASTING OF THE BARRIER RAIL OR PARAPET AND END POST.

FOR THE 6" Ø DRAINAGE PIPE OUTLET(S), SEE ROADWAY STANDARD DRAWINGS.

AREA BETWEEN THE WINGWALL AND APPROACH SLAB SHALL BE GRADED TO DRAIN THE WATER AWAY FROM THE FILL FACE OF THE BRIDGE AND SHALL BE PAVED. SEE ROADWAY PLANS.

| SPLICE LENGTHS | | |
|---|---|---|
| BAR SIZE | EPOXY COATED | UNCOATED |
| #4 | 2'-0" | 1'-9" |
| #5 | 2'-6" | 2'-2" |
| #6 | 3'-10" | 2'-7" |

BAR TYPE

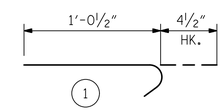


ALL BAR DIMENSIONS ARE OUT TO OUT

BILL OF MATERIAL

APPROACH SLAB AT EB #1

| BAR | NO. | SIZE | TYPE | LENGTH | WEIGHT |
|---|---|---|---|---|---|
| ✳ A1 | 75 | #4 | STR | 23'-8" | 1,186 |
| A2 | 78 | #4 | STR | 23'-5" | 1,220 |
| ✳ B1 | 83 | #5 | STR | 23'-9" | 2,056 |
| B2 | 83 | #6 | STR | 24'-5" | 3,044 |
| ✳ B3 | 1 | #5 | STR | 10'-1" | 11 |
| B4 | 1 | #6 | STR | 10'-1" | 15 |
| ✳ B5 | 1 | #5 | STR | 9'-6" | 10 |
| B6 | 1 | #6 | STR | 9'-6" | 14 |
| ✳ B7 | 1 | #5 | STR | 10'-6" | 11 |
| B8 | 1 | #6 | STR | 10'-6" | 16 |
| ✳ B9 | 1 | #5 | STR | 11'-1" | 12 |
| B10 | 1 | #6 | STR | 11'-1" | 17 |
| ✳ J1 | 62 | #4 | 1 | 1'-5" | 59 |
| REINFORCING STEEL | | | ✳✳ LBS. | | 4,326 |
| ✳ EPOXY COATED REINFORCING STEEL | | | ✳✳ LBS. | | 3,345 |
| CLASS AA CONCRETE | | | ✳✳ C. Y. | | 46.2 |

APPROACH SLAB AT EB #2

| BAR | NO. | SIZE | TYPE | LENGTH | WEIGHT |
|---|---|---|---|---|---|
| ✳ A3 | 75 | #4 | STR | 25'-2" | 1,261 |
| A4 | 78 | #4 | STR | 25'-0" | 1,303 |
| ✳ B1 | 83 | #5 | STR | 24'-2" | 2,092 |
| B2 | 83 | #6 | STR | 24'-8" | 3,075 |
| ✳ B3 | 1 | #5 | STR | 10'-1" | 11 |
| B4 | 1 | #6 | STR | 10'-1" | 15 |
| ✳ B5 | 1 | #5 | STR | 9'-6" | 10 |
| B6 | 1 | #6 | STR | 9'-6" | 14 |
| ✳ B7 | 1 | #5 | STR | 10'-6" | 11 |
| B8 | 1 | #6 | STR | 10'-6" | 16 |
| ✳ B9 | 1 | #5 | STR | 11'-1" | 12 |
| B10 | 1 | #6 | STR | 11'-1" | 17 |
| ✳ J1 | 67 | #4 | 1 | 1'-5" | 63 |
| REINFORCING STEEL | | | ✳✳ LBS. | | 4,440 |
| ✳ EPOXY COATED REINFORCING STEEL | | | ✳✳ LBS. | | 3,460 |
| CLASS AA CONCRETE | | | ✳✳ C. Y. | | 46.3 |

THE QUANTITY OF #4 J1 BARS ON THE BILL OF MATERIAL IS BASED ON 1'-0" CENTERS. J1 BARS SHALL BE PLACED AT EACH VERTICAL STUD ANCHOR BOLT. IN THE EVENT THAT THE NUMBER OF VERTICAL STUD ANCHORS EXCEEDS THE NUMBER OF J1 BARS SPECIFIED, ADDITIONAL J1 BARS WILL NOT BE REQUIRED.

✳✳ QUANTITIES FOR BARRIER RAIL ARE NOT INCLUDED. SEE SHEET 3 OF 3.

PROJECT NO. R-1015

CRAVEN COUNTY

STATION: POC STA. 138+31.09 -L-

SHEET 2 OF 3

STATE OF NORTH CAROLINA
DEPARTMENT OF TRANSPORTATION
RALEIGH

STANDARD

BRIDGE APPROACH SLAB FOR FLEXIBLE PAVEMENT

RIGHT LANE

DocuSigned by: James P. Gregg
DocuSign Envelope ID: E024ABBC-404...

NORTH CAROLINA PROFESSIONAL SEAL 046632 ENGINEER JAMES P. GREGG

11/20/2018

| ASSEMBLED BY : A. SMITH | DATE : 7/18 |
|---|---|
| CHECKED BY : Z. GUO | DATE : 10/18 |

| DRAWN BY : EEM 3/95 | REV. 12/21/11 MAA/GM |
|---|---|
| CHECKED BY : VAP 3/95 | REV. 6/13 MAA/GM |
| | REV. 12/17 MAA/THC |

HNTB

HNTB NORTH CAROLINA, P.C.
NC License No. C-1554
343 E. Six Forks Rd., Suite 200, Raleigh, N.C. 27609

| DRAWN BY | A. SMITH | DATE | 7/18 |
|---|---|---|---|
| CHECKED BY | Z. GUO | DATE | 10/18 |
| DESIGN ENGINEER OF RECORD | J. GREGG | DATE | 10/18 |

DWG. NO. 45

DOCUMENT NOT CONSIDERED FINAL UNLESS ALL SIGNATURES COMPLETED

| REVISIONS | | | | | | SHEET NO. |
|---|---|---|---|---|---|---|
| NO. | BY | DATE | NO. | BY | DATE | S04-45 |
| 1 | | | 3 | | | TOTAL SHEETS |
| 2 | | | 4 | | | 46 |

STR. #4

STD. NO. BAS2

DocuSign Envelope ID: 11A1261F-14B1-49AE-A388-908A64E11071

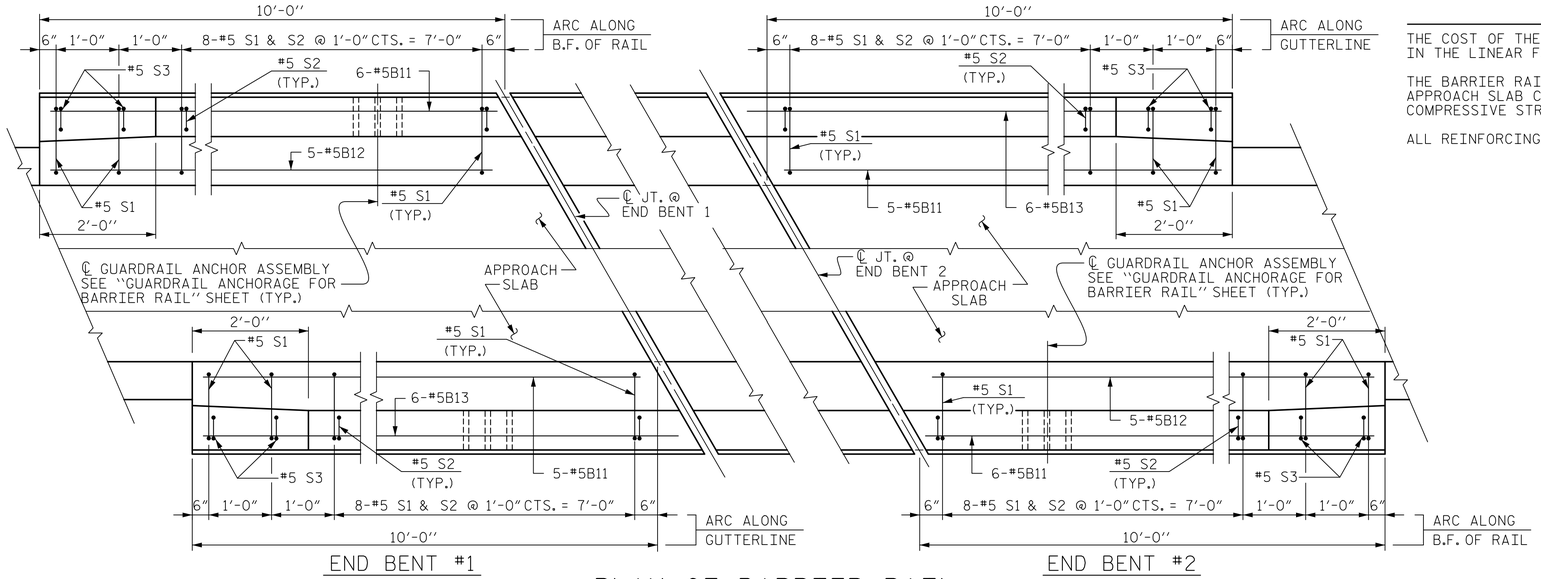


## PLAN OF BARRIER RAIL

B.F. - DENOTES BACK FACE

## NOTES

THE COST OF THE BARRIER RAIL ON THE APPROACH SLAB SHALL BE INCLUDED IN THE LINEAR FOOT CONTRACT PRICE BID FOR "CONCRETE BARRIER RAIL".

THE BARRIER RAIL ON EACH APPROACH SLAB SHALL NOT BE CAST UNTIL ALL APPROACH SLAB CONCRETE HAS BEEN CAST AND HAS REACHED A MINIMUM COMPRESSIVE STRENGTH OF 3,000 PSI.

ALL REINFORCING STEEL IN BARRIER RAILS SHALL BE EPOXY COATED.

## BAR TYPES

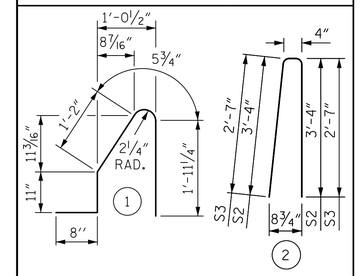


ALL BAR DIMENSIONS ARE OUT TO OUT

## BILL OF MATERIAL

BARRIER RAIL ONLY

| BAR | NO. | SIZE | TYPE | LENGTH | WEIGHT |
|---|---|---|---|---|---|
| ✳ B11 | 22 | #5 | STR | 9'-9" | 224 |
| ✳ B12 | 11 | #5 | STR | 11'-0" | 126 |
| ✳ B13 | 11 | #5 | STR | 11'-3" | 129 |
| | | | | | |
| ✳ S1 | 40 | #5 | 1 | 5'-2" | 216 |
| ✳ S2 | 32 | #5 | 2 | 7'-0" | 234 |
| ✳ S3 | 8 | #5 | 2 | 5'-6" | 46 |
| | | | | | |

| | | |
|---|---|---|
| ✳ EPOXY COATED REINFORCING STEEL | LBS. | 975 |
| CLASS AA CONCRETE | C. Y. | 5.7 |
| CONCRETE BARRIER RAIL | | 44.0 LIN. FT. |

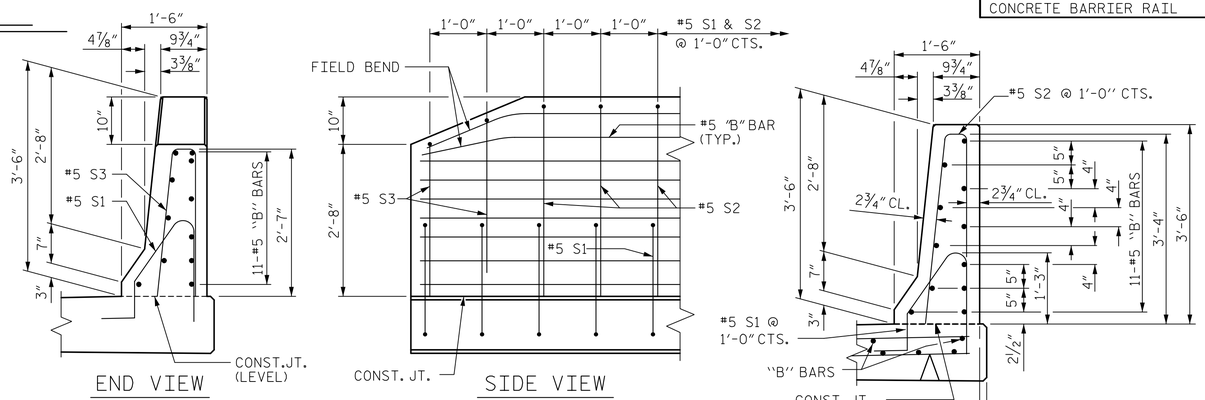


## END OF RAIL DETAILS

## SECTION THRU RAIL

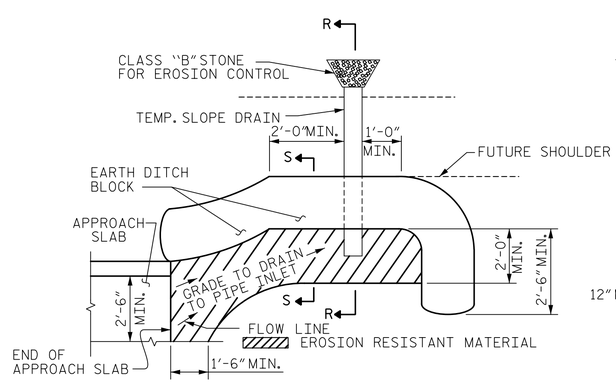


NOTE: IMMEDIATELY AFTER THE CONSTRUCTION OF THE APPROACH SLAB, THE CONTRACTOR SHALL PROVIDE TEMPORARY BERM AND SLOPE DRAIN. CONTRACTOR SHALL GRADE TO PIPE INLET AND PROVIDE EROSION RESISTANT MATERIAL AS SHOWN. THE EROSION RESISTANT MATERIAL SHALL BE EITHER 1) ASPHALT PLANT MIX, TYPE 1 OR TYPE 2, MIN. 2" DEPTH, 2) EROSION CONTROL MAT, OR 3) CONCRETE, AS DIRECTED BY THE ENGINEER. THE SLOPE DRAIN SHALL CONSIST OF A NON-PERFORATED TEMPORARY DRAINAGE PIPE, 12 INCHES IN DIAMETER.

## PLAN VIEW

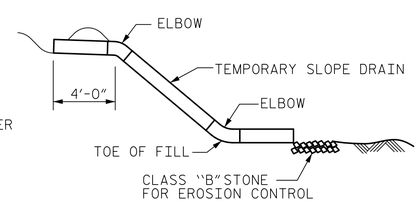


## SECTION R-R

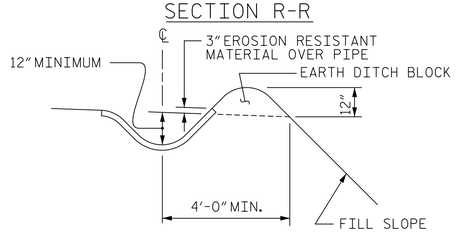


## SECTION S-S

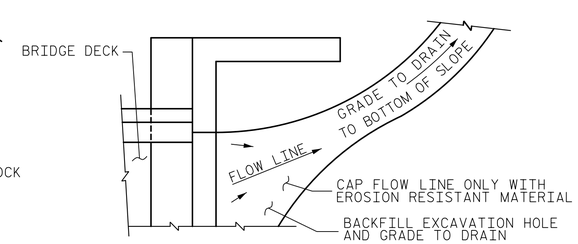


NOTE: IF THE APPROACH SLAB IS NOT CONSTRUCTED IMMEDIATELY AFTER THE BACKFILLING OF THE END BENT EXCAVATION, GRADE TO DRAIN TO THE BOTTOM OF THE SLOPE AND PROVIDE EROSION RESISTANT MATERIAL, SUCH AS FIBERGLASS ROVING OR AS DIRECTED BY THE ENGINEER TO PREVENT SOIL EROSION AND TO PROTECT THE AREA ADJACENT TO THE STRUCTURE. THE CONTRACTOR WILL BE REQUIRED TO REMOVE THESE MATERIALS PRIOR TO CONSTRUCTION OF THE APPROACH SLAB.

## TEMPORARY DRAINAGE DETAIL

PROJECT NO. R-1015

CRAVEN COUNTY

STATION: POC STA. 138+31.09 -L-

SHEET 3 OF 3

DocuSigned by: James P. Gregg

NORTH CAROLINA PROFESSIONAL SEAL 046632 ENGINEER JAMES P. GREGG

11/20/2018

STATE OF NORTH CAROLINA
DEPARTMENT OF TRANSPORTATION
RALEIGH

STANDARD

BRIDGE APPROACH SLAB DETAILS

RIGHT LANE

| ASSEMBLED BY : A. Smith | DATE : 7/18 |
|---|---|
| CHECKED BY : Z. GUO | DATE : 10/18 |

| | | |
|---|---|---|
| DRAWN BY : FCJ | 11/88 | REV. 10/1/11 MAA/GM |
| CHECKED BY : ARB | 11/88 | REV. 7/12 MAA/GM |
| | | REV. 6/13 MAA/GM |

## TEMPORARY BERM AND SLOPE DRAIN DETAILS

(TO BE USED WHEN SHOULDER BERM GUTTER IS REQUIRED)

**DOCUMENT NOT CONSIDERED FINAL UNLESS ALL SIGNATURES COMPLETED**

HNTB

HNTB NORTH CAROLINA, P.C.
NC License No. C-1554
343 E. Six Forks Rd., Suite 200, Raleigh, N.C. 27609

| | | | |
|---|---|---|---|
| DRAWN BY | A. SMITH | DATE | 7/18 |
| CHECKED BY | Z. GUO | DATE | 10/18 |
| DESIGN ENGINEER OF RECORD | J. GREGG | DATE | 10/18 |

DWG. NO. 46

| REVISIONS | | | | | | SHEET NO. |
|---|---|---|---|---|---|---|
| NO. | BY | DATE | NO. | BY | DATE | S04-46 |
| 1 | | | 3 | | | TOTAL SHEETS |
| 2 | | | 4 | | | 46 |

STD. NO. BAS4

DocuSign Envelope ID: 41B4F490-A702-4BD4-819D-3D05819DE79C

F.A. PROJECT: NHF-70(49)

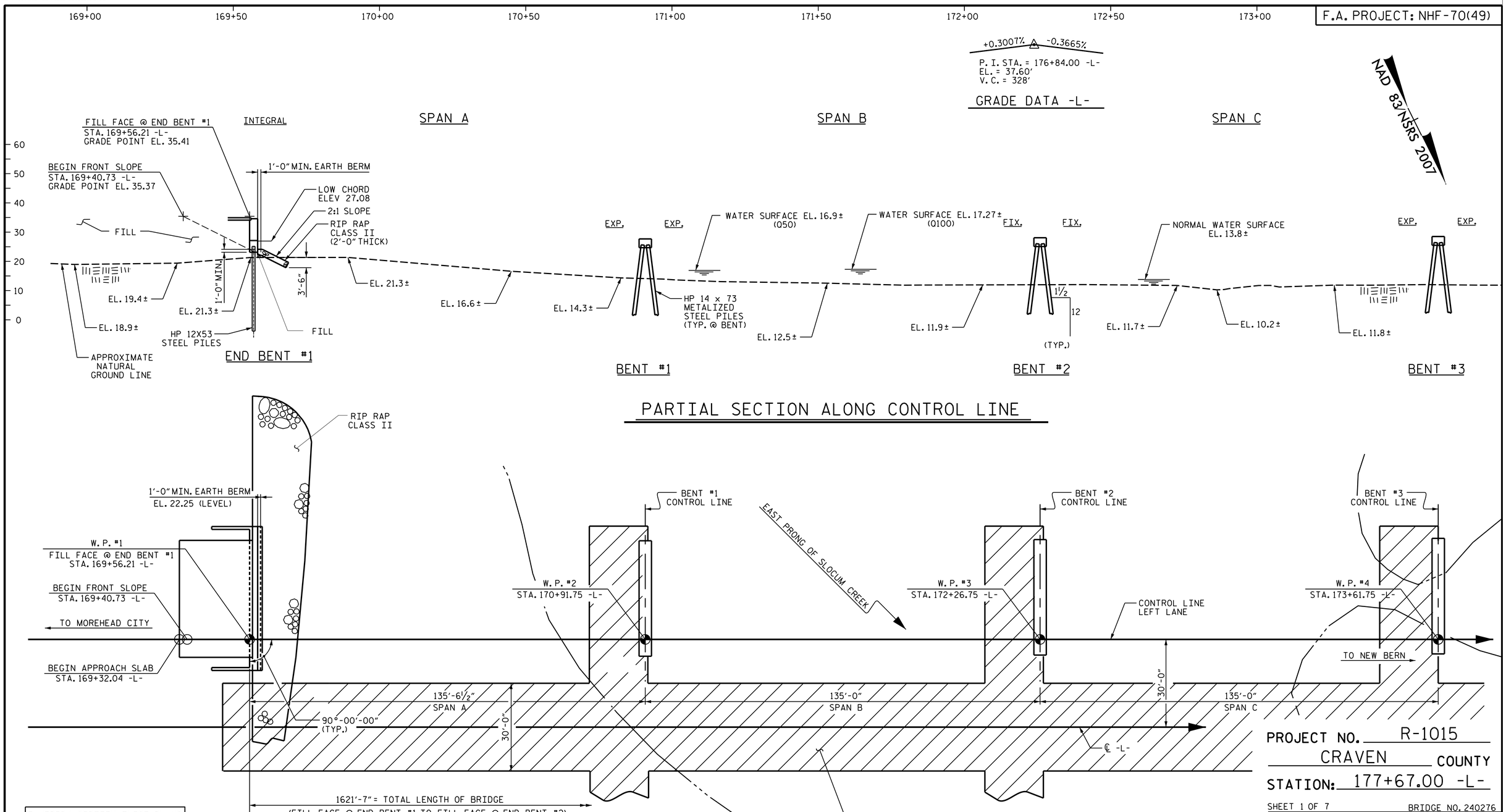





PROJECT NO. R-1015

CRAVEN COUNTY

STATION: 177+67.00 -L-

SHEET 1 OF 7

BRIDGE NO. 240276

I HEREBY CERTIFY THESE PLANS ARE THE AS-BUILT PLANS

STATE OF NORTH CAROLINA
DEPARTMENT OF TRANSPORTATION
RALEIGH

GENERAL DRAWING
FOR BRIDGE OVER EAST PRONG OF SLOCUM CREEK ON US 70 BYPASS BETWEEN US 70 AND SR 1756 (LEFT LANE)

1998 2018
ALPHA & OMEGA GROUP
CIVIL | STRUCTURAL | WATER RESOURCES

4601 Lake Boone Trail Suite 3C Raleigh, NC 27607
Phone 919 981 0310 Fax 919 981 0451
www.aogroup.com Firm License No. C-1684

A&O PROJECT NO. 2015.042

DocuSigned by:
D794597C456A4F7...
12/7/2018

REFERENCE No. 5-1

DOCUMENT NOT CONSIDERED FINAL UNLESS ALL SIGNATURES COMPLETED

| REVISIONS | | | | | | SHEET NO. |
|---|---|---|---|---|---|---|
| NO. | BY: | DATE: | NO. | BY: | DATE: | S5-1 |
| 1 | | | 3 | | | TOTAL SHEETS |
| 2 | | | 4 | | | 46 |

STRUCTURE No. 5

| | | | |
|---|---|---|---|
| DRAWN BY : | J. B. W. | DATE : | 7/12/2018 |
| CHECKED BY : | S. K. C. | DATE : | 7/13/2018 |
| DESIGN ENGINEER OF RECORD: | T.L.B. | DATE : | 8/31/2018 |

$$$$$$SYSTIME$$$$$
$$$$$$$$$$$$$$$$$$$$$$$$DGN$$$$$$$$$$$$$$$$$$$$$$$$
$$$$USERNAME$$$$

DocuSign Envelope ID: 41B4F490-A702-4BD4-819D-3D05819DE79C

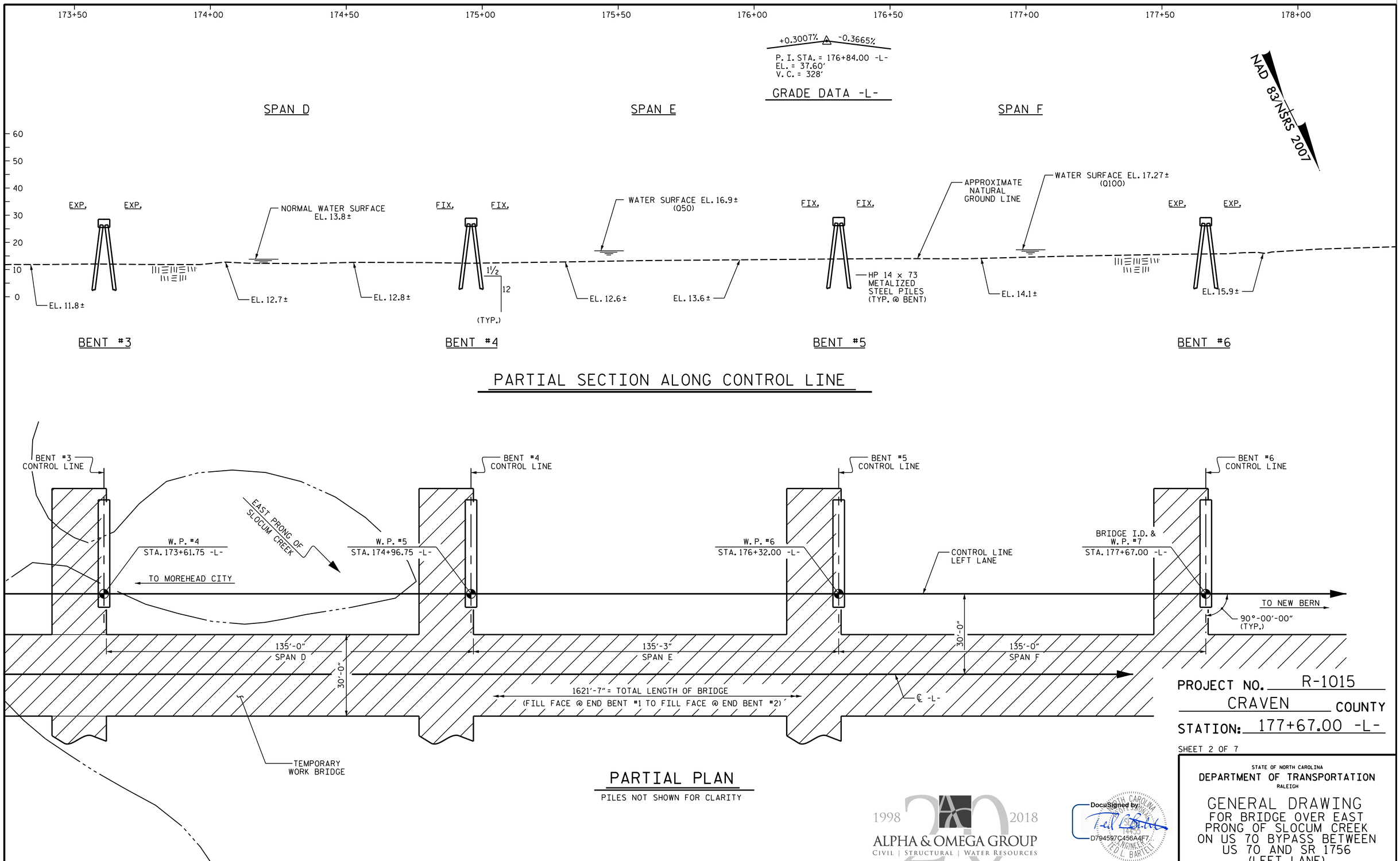


PROJECT NO. R-1015

CRAVEN COUNTY

STATION: 177+67.00 -L-

SHEET 2 OF 7

STATE OF NORTH CAROLINA
DEPARTMENT OF TRANSPORTATION
RALEIGH

GENERAL DRAWING
FOR BRIDGE OVER EAST
PRONG OF SLOCUM CREEK
ON US 70 BYPASS BETWEEN
US 70 AND SR 1756
(LEFT LANE)

1998 2018
ALPHA & OMEGA GROUP
CIVIL | STRUCTURAL | WATER RESOURCES

4601 Lake Boone Trail Suite 3C Raleigh, NC 27607
Phone 919 981 0310 Fax 919 981 0451
www.aogroup.com Firm License No. C-1684

A&O PROJECT NO. 2015.042

DocuSigned by:
D794597C456A4F7...
12/7/2018

REFERENCE No. 5-2

DOCUMENT NOT CONSIDERED
FINAL UNLESS ALL
SIGNATURES COMPLETED

| REVISIONS | | | | | | | |
|---|---|---|---|---|---|---|---|
| NO. | BY: | DATE: | NO. | BY: | DATE: | | |
| 1 | | | 3 | | | | |
| 2 | | | 4 | | | | |

SHEET NO. S5-2

TOTAL SHEETS 46

STRUCTURE No. 5

DRAWN BY : J. B. W. DATE : 7/12/2018
CHECKED BY : S. K. C. DATE : 7/13/2018
DESIGN ENGINEER OF RECORD: T.L.B. DATE : 8/31/2018

$$$$$$SYSTIME$$$$$
$$$$$$$$$$$$$$$$$$$$$$$$DGN$$$$$$$$$$$$$$$$$$$$$$$$
$$$$USERNAME$$$$

DocuSign Envelope ID: 41B4F490-A702-4BD4-819D-3D05819DE79C

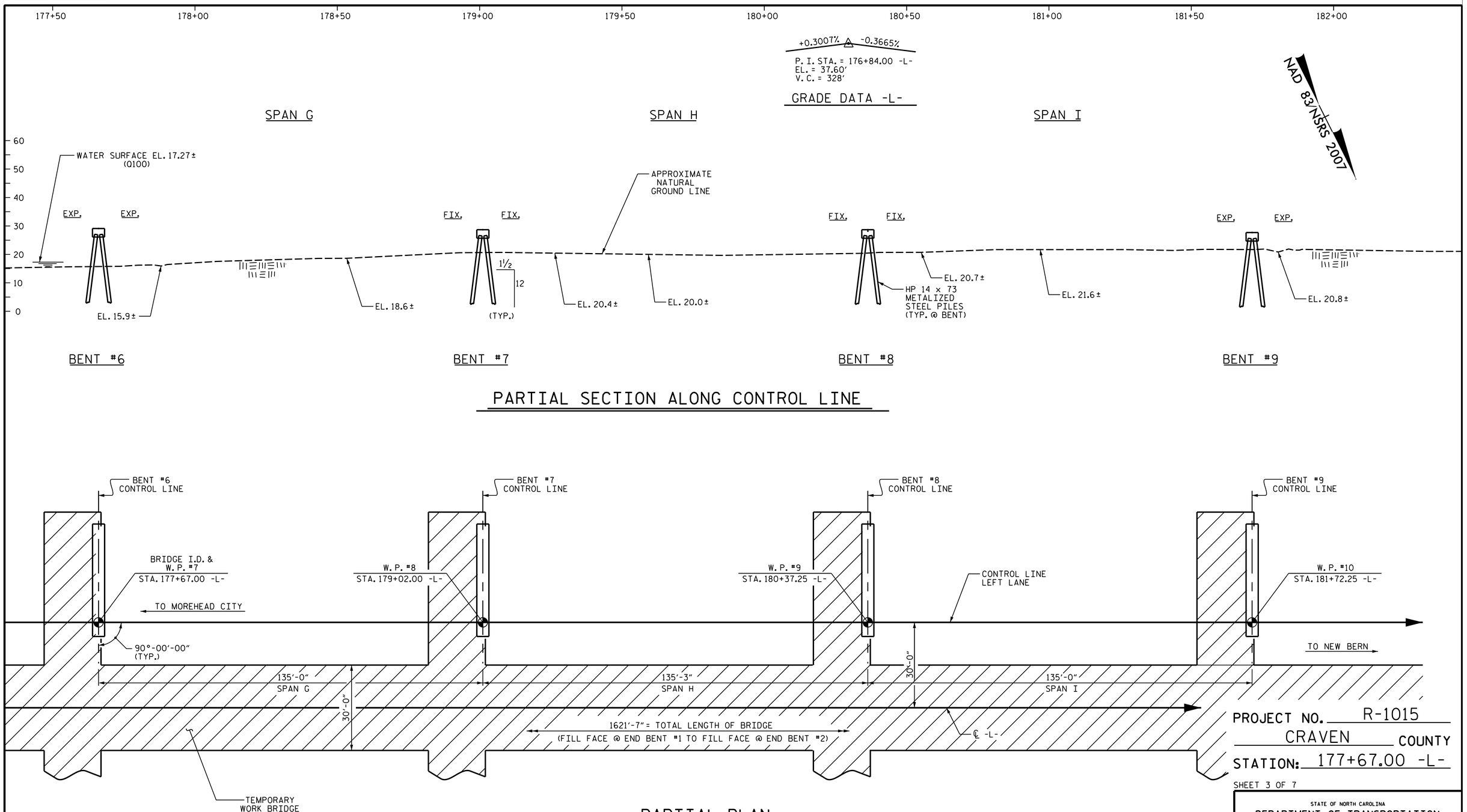


PROJECT NO. R-1015

CRAVEN COUNTY

STATION: 177+67.00 -L-

SHEET 3 OF 7

STATE OF NORTH CAROLINA
DEPARTMENT OF TRANSPORTATION
RALEIGH

GENERAL DRAWING
FOR BRIDGE OVER EAST
PRONG OF SLOCUM CREEK
ON US 70 BYPASS BETWEEN
US 70 AND SR 1756
(LEFT LANE)

1998 2018
ALPHA & OMEGA GROUP
CIVIL | STRUCTURAL | WATER RESOURCES

4601 Lake Boone Trail Suite 3C Raleigh, NC 27607
Phone 919 981 0310 Fax 919 981 0451
www.aogroup.com Firm License No. C-1684

A&O PROJECT NO. 2015.042

DocuSigned by:
D794597C456A4F7...
12/7/2018

REFERENCE No. 5-3

DOCUMENT NOT CONSIDERED FINAL UNLESS ALL SIGNATURES COMPLETED

| REVISIONS | | | | | | |
|---|---|---|---|---|---|---|
| NO. | BY: | DATE: | NO. | BY: | DATE: | |
| 1 | | | 3 | | | |
| 2 | | | 4 | | | |

SHEET NO. S5-3

TOTAL SHEETS 46

STRUCTURE No. 5

| | | | |
|---|---|---|---|
| DRAWN BY : | J. B. W. | DATE : | 7/12/2018 |
| CHECKED BY : | S. K. C. | DATE : | 7/13/2018 |
| DESIGN ENGINEER OF RECORD: | T. L. B. | DATE : | 8/31/2018 |

$$$$$$SYSTIME$$$$$
$$$$$$$$$$$$$$$$$$$$$$$$DGN$$$$$$$$$$$$$$$$$$$$$$$$
$$$$USERNAME$$$$

DocuSign Envelope ID: 41B4F490-A702-4BD4-819D-3D05819DE79C

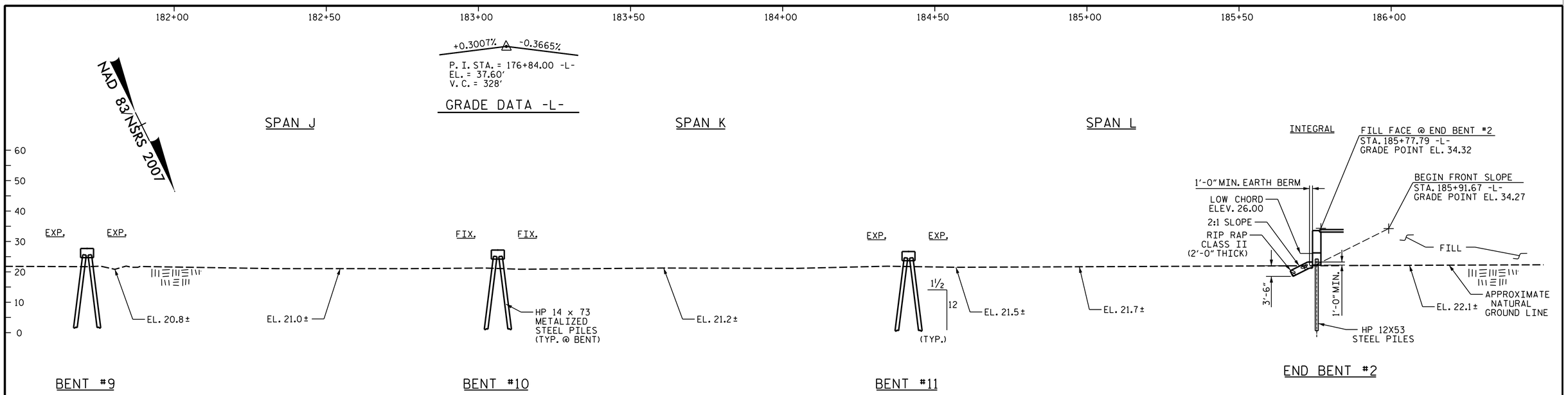


## PARTIAL SECTION ALONG CONTROL LINE

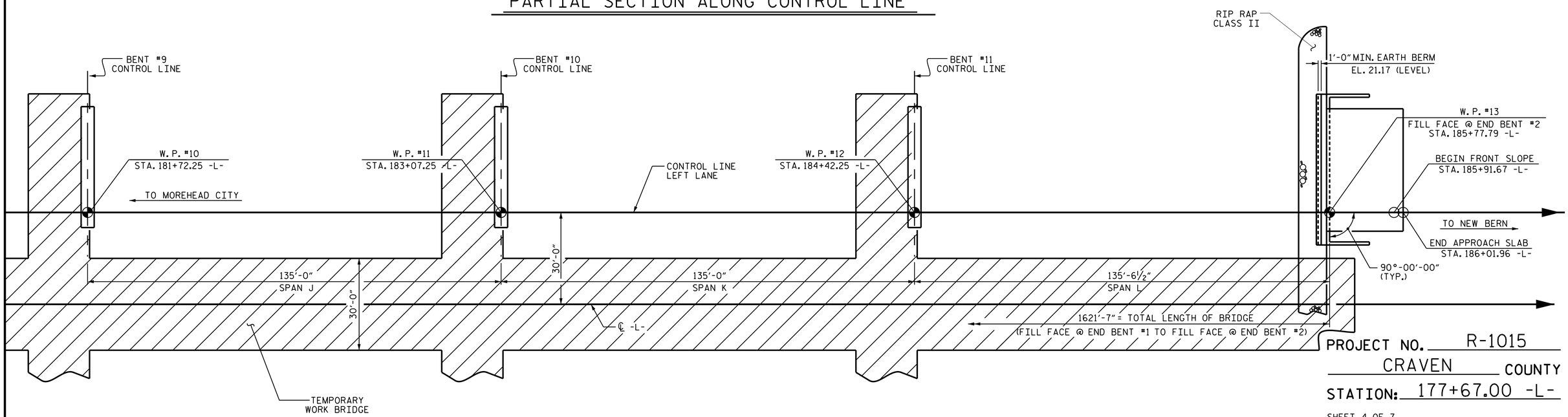


## PARTIAL PLAN

PILES NOT SHOWN FOR CLARITY

PROJECT NO. R-1015

CRAVEN COUNTY

STATION: 177+67.00 -L-

SHEET 4 OF 7

STATE OF NORTH CAROLINA
DEPARTMENT OF TRANSPORTATION
RALEIGH

# GENERAL DRAWING
FOR BRIDGE OVER EAST PRONG OF SLOCUM CREEK ON US 70 BYPASS BETWEEN US 70 AND SR 1756 (LEFT LANE)

1998 2018
ALPHA & OMEGA GROUP
CIVIL | STRUCTURAL | WATER RESOURCES

4601 Lake Boone Trail Suite 3C Raleigh, NC 27607
Phone 919 981 0310 Fax 919 981 0451
www.aogroup.com Firm License No. C-1684

A&O PROJECT NO. 2015.042

DocuSigned by:
D794597C456A4F7...
12/7/2018

REFERENCE No. 5-4

DOCUMENT NOT CONSIDERED FINAL UNLESS ALL SIGNATURES COMPLETED

| REVISIONS | | | | | | |
|---|---|---|---|---|---|---|
| NO. | BY: | DATE: | NO. | BY: | DATE: | |
| 1 | | | 3 | | | |
| 2 | | | 4 | | | |

SHEET NO. S5-4

TOTAL SHEETS 46

STRUCTURE No. 5

DRAWN BY : J. B. W. DATE : 7/12/2018
CHECKED BY : S. K. C. DATE : 7/13/2018
DESIGN ENGINEER OF RECORD: T.L.B. DATE : 8/23/2018

$$$$$$SYSTIME$$$$$
$$$$$$$$$$$$$$$$$$$$$$DGN$$$$$$$$$$$$$$$$$$$$$$
$$$$USERNAME$$$$

DocuSign Envelope ID: 41B4F490-A702-4BD4-819D-3D05819DE79C

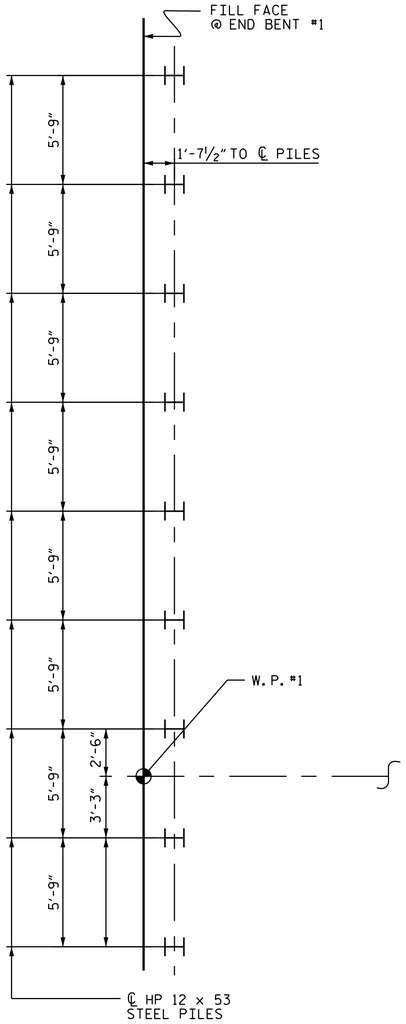


END BENT #1

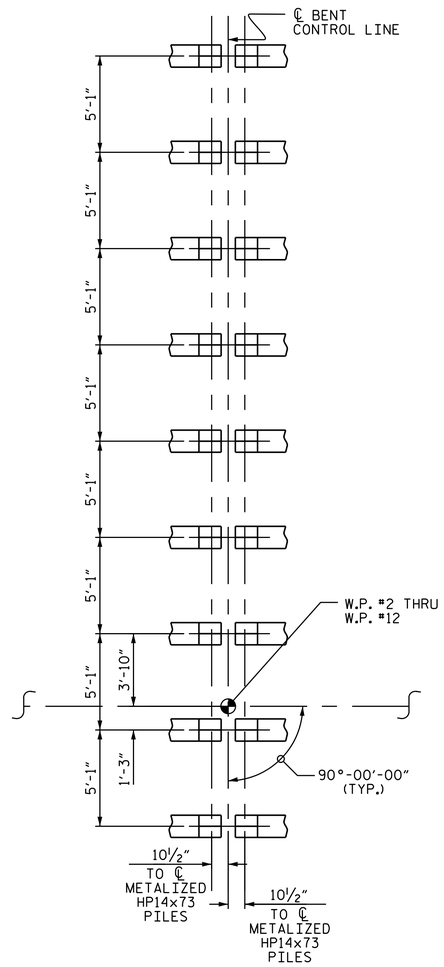


BENT #1 THRU BENT #11

PILES BATTERED AT 1½":12"

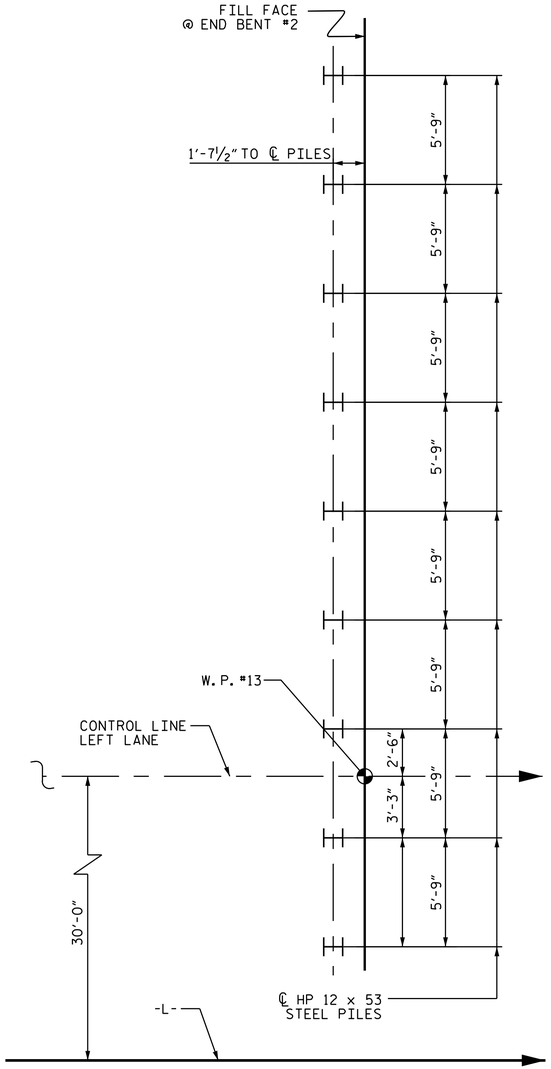


END BENT #2

# FOUNDATION LAYOUT

DIMENSIONS LOCATING PILES ARE SHOWN TO PILE CENTERLINE AT BOTTOM OF CAP

| W.P. NO. | STATION NO. | W.P. NO. | STATION NO. |
|---|---|---|---|
| 1 | 169+56.21 -L- | 7 | 177+67.00 -L- |
| 2 | 170+91.75 -L- | 8 | 179.02.00 -L- |
| 3 | 172+26.75 -L- | 9 | 180+37.25 -L- |
| 4 | 173+61.75 -L- | 10 | 181+72.25 -L- |
| 5 | 174+96.75 -L- | 11 | 183+07.25 -L- |
| 6 | 176+32.00 -L- | 12 | 184+42.25 -L- |
| | | 13 | 185+77.79 -L- |

## NOTES

FOR PILES, SEE SECTION 450 OF THE STANDARD SPECIFICATIONS.

PILES AT INTEGRAL END BENT 1 AND INTEGRAL END BENT 2 ARE DESIGNED FOR A FACTORED RESISTANCE OF 125 TONS PER PILE.

DRIVE PILES AT INTEGRAL END BENT NO. 1 AND INTEGRAL END BENT NO. 2 TO A REQUIRED BEARING CAPACITY OF 170 TONS PER PILE.

PILES AT BENT 1 THROUGH BENT 11 ARE DESIGNED FOR A FACTORED RESISTANCE OF 140 TONS PER PILE.

DRIVE PILES AT BENT 1 THROUGH BENT 11 TO A REQUIRED BEARING CAPACITY OF 190 TONS PER PILE.

THE SCOUR CRITICAL ELEVATION FOR BENT 1 THROUGH BENT 6 IS ELEVATION 7 FT. SCOUR CRITICAL ELEVATIONS ARE USED TO MONITOR POSSIBLE SCOUR PROBLEMS DURING THE LIFE OF THE STRUCTURE.

SEE ROADWAY PLANS AND SECTION 235 OF THE STANDARD SPECIFICATIONS FOR THE SETTLEMENT GAUGES REQUIRED AT END BENT NO. 2.

TESTING ONE PRODUCTION PILE WITH THE PDA DURING DRIVING, RESTRIKING OR REDRIVING IS REQUIRED AT THE END BENT LOCATIONS. FOR PDA TESTING, SEE SECTION 450 OF THE STANDARD SPECIFICATIONS.

TESTING TWO PRODUCTION PILE WITH THE PDA DURING DRIVING, RESTRIKING OR REDRIVING IS REQUIRED AT THE INTERIOR BENT LOCATIONS. FOR PDA TESTING, SEE SECTION 450 OF THE STANDARD SPECIFICATIONS.

TO FACILITATE CONSOLIDATION OF UNDERLYING CLAY SOILS, PLACE AND COMPACT EMBANKMENT TO SUBGRADE (SOME WILL BE TEMPORARY FILL) FOR A DISTANCE OF 100 FEET BEHIND THE END BENT 2 AND OBSERVE A 3 MONTH WAITING PERIOD BEFORE BEGINNING END BENT CONSTRUCTION AT END BENT NO. 2. CONSTRUCT TEMPORARY FILL WITH A 1.5:1 SLOPE IN FRONT OF THE THE LOCATION OF THE PROPOSED END BENT CAP AND DIG OUT AS NECESSARY AFTER THE WAITING PERIOD TO CONSTRUCT THE END BENT AND TYPE 1 APPROACH FILLS.

PROJECT NO. R-1015

CRAVEN COUNTY

STATION: 177+67.00 -L-

SHEET 5 OF 7

STATE OF NORTH CAROLINA
DEPARTMENT OF TRANSPORTATION
RALEIGH

GENERAL DRAWING
(LEFT LANE)

DRAWN BY : J. B. W. DATE : 7/12/2018
CHECKED BY : S. K. C. DATE : 7/13/2018
DESIGN ENGINEER OF RECORD: T.L.B. DATE : 8/23/2018

1998 2018
ALPHA & OMEGA GROUP
CIVIL | STRUCTURAL | WATER RESOURCES
4601 Lake Boone Trail Suite 3C Raleigh, NC 27607
Phone 919 981 0310 Fax 919 981 0451
www.aogroup.com Firm License No. C-1684
A&O PROJECT NO. 2015.042

DocuSigned by:
D794597C456A4F7...
NORTH CAROLINA PROFESSIONAL SEAL 14430 ENGINEER TED L. BARTELL
12/7/2018

REFERENCE NO. 5-5

DOCUMENT NOT CONSIDERED FINAL UNLESS ALL SIGNATURES COMPLETED

| REVISIONS | | | | | | | SHEET NO. |
|---|---|---|---|---|---|---|---|
| NO. | BY: | DATE: | NO. | BY: | DATE: | | S5-5 |
| 1 | | | 3 | | | | TOTAL SHEETS |
| 2 | | | 4 | | | | 46 |

STRUCTURE NO. 5

$$$$$$SYSTIME$$$$$
$$$$$$$$$$$$$$$$$$$$$$$$DGN$$$$$$$$$$$$$$$$$$$$$$$$
$$$$USERNAME$$$$

DocuSign Envelope ID: 41B4F490-A702-4BD4-819D-3D05819DE79C

BM #9 RR SPIKE IN TREE AT STATION 171+55.00 -L- ; 138' RT., ELEVATION =22.04 NGVD 29

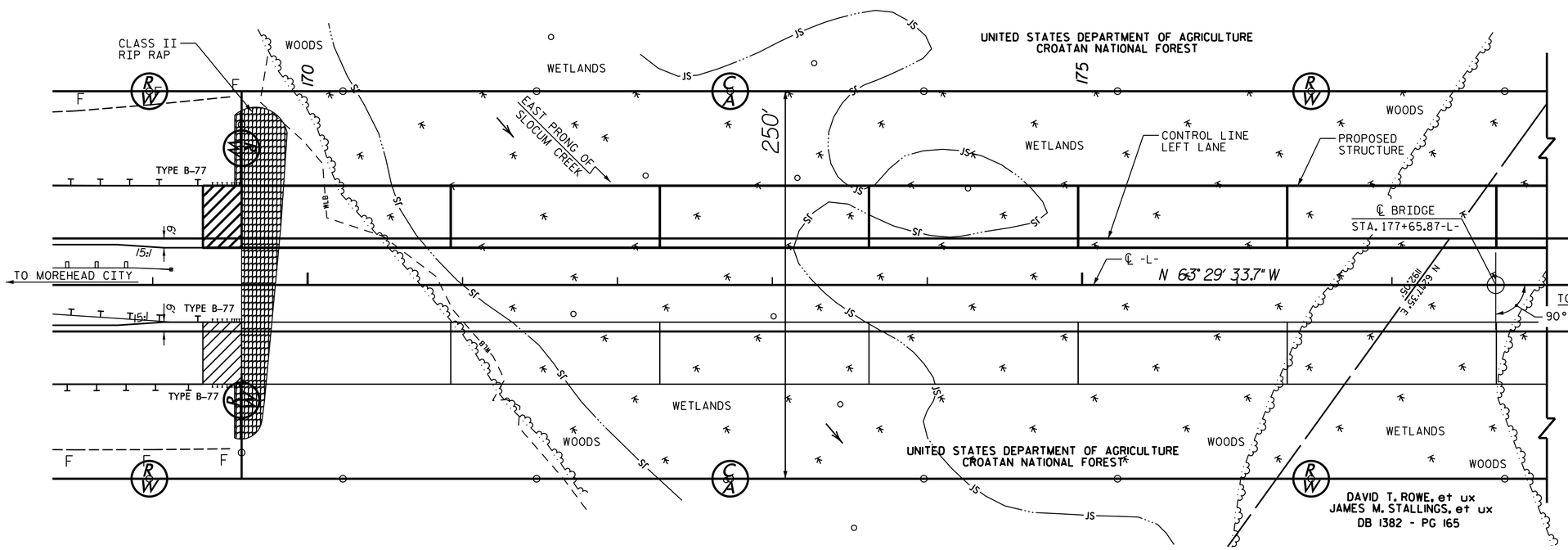


## HYDRAULIC DATA

| | |
|---|---|
| DESIGN DISCHARGE | 890 C.F.S. |
| FREQUENCY OF DESIGN FLOOD | 50 YRS. |
| DESIGN HIGH WATER ELEVATION | 16.9 FT. |
| DRAINAGE AREA | 5.8 SQ.MI. |
| BASIC DISCHARGE (Q100) | 1080 C.F.S. |
| BASIC HIGH WATER ELEVATION | 17.27 FT. |

## OVERTOPPING FLOOD DATA

| | |
|---|---|
| OVERTOPPING DISCHARGE | N/A C.F.S. |
| FREQUENCY OF OVERTOPPING FLOOD | 500+ YRS. |
| OVERTOPPING FLOOD ELEVATION | N/A FT. |

FOR UTILITY INFORMATION, SEE UTILITY PLANS AND SPECIAL PROVISIONS.

# LOCATION SKETCH

## NOTES

ASSUMED LIVE LOAD = HL-93 OR ALTERNATE LOADING.

THIS BRIDGE HAS BEEN DESIGNED IN ACCORDANCE WITH THE AASHTO LRFD BRIDGE DESIGN SPECIFICATIONS.

THIS STRUCTURE CONTAINS THE NECESSARY CORROSION PROTECTION REQUIRED FOR A CORROSIVE SITE.

FOR OTHER DESIGN DATA AND GENERAL NOTES, SEE SHEET SN.

FOR SUBMITTAL OF WORKING DRAWINGS, SEE SPECIAL PROVISIONS.

FOR FALSEWORK AND FORMWORK, SEE SPECIAL PROVISIONS.

FOR CRANE SAFETY, SEE SPECIAL PROVISIONS.

FOR GROUT FOR STRUCTURES, SEE SPECIAL PROVISIONS.

FOR 74" MODIFIED PRESTRESSED CONCRETE GIRDERS, SEE SPECIAL PROVISIONS,

FOR BRIDGE DECK RIDEABILITY AND GROOVING, SEE SPECIAL PROVISIONS.

THE CONTRACTOR SHALL PROVIDE INDEPENDENT ASSURANCE SAMPLES OF REINFORCING STEEL AS FOLLOWS: FOR PROJECTS REQUIRING UP TO 400 TONS OF REINFORCING STEEL, ONE 30 INCH SAMPLE OF EACH SIZE BAR USED, AND FOR PROJECTS REQUIRING OVER 400 TONS OF REINFORCING STEEL, TWO 30 INCH SAMPLES OF EACH SIZE BAR USED. THE SAMPLE BARS SHOULD COME FROM STEEL ACTUALLY USED IN THE PROJECT AND THE SAMPLE BARS SHOULD BE REPLACED BY SPLICED BARS AS SPECIFIED IN THE SAMPLE BAR REPLACEMENT CHART. PAYMENT FOR THE SAMPLE BARS AND REPLACEMENT REINFORCING STEEL SHALL BE CONSIDERED INCIDENTIAL TO VARIOUS PAY ITEMS.

NEEDLE BEAMS WILL NOT BE ALLOWED UNLESS OTHERWISE CALLED FOR ON THE PLANS OR APPROVED BY THE ENGINEER.

THE CLASS AA CONCRETE IN THE BRIDGE DECK SHALL CONTAIN FLY ASH OR GROUND GRANULATED BLAST FURNACE SLAG AT THE SUBSTUTION RATE SPECIFIED IN ARTICLE 1024-1 AND IN ACCORDANCE WITH ARTICLES 1024-5 AND 1026-6 OF THE STANDARD SPECIFICATIONS. NO PAYMENT WILL BE MADE FOR THIS SUBSTUTITION AS IT IS CONSIDERED INCIDENTIAL TO THE COST OF THE REINFORCED CONCRETE DECK SLAB.

CLASS AA CONCRETE SHALL BE USED IN CAST-IN-PLACE BENT CAPS AND SHALL CONTAIN CALCIUM NITRITE CORROSION INHIBITOR.

ALL BAR SUPPORTS USED IN THE (BARRIER RAIL, DECK, BENT CAPS) AND ALL INCIDENTAL REINFORCING STEEL SHALL BE EPOXY COATED IN ACCORDANCE WITH THE STANDARD SPECIFICATIONS.

FOR EROSION CONTROL MEASURES, SEE EROSION CONTROL PLANS.

THIS STRUCTURE HAS BEEN DESIGNED IN ACCORDANCE WITH "HEC 18 - EVALUATING SCOUR AT BRIDGES.

FOR CONSTRUCTION, MAINTENANCE, AND REMOVAL OF TEMPORARY ACCESS, SEE SPECIAL PROVISIONS.

FOR PILE DRIVING EQUIPMENT SETUP FOR HP 14X73 METALIZED STEEL PILES, SEE SPECIAL PROVISIONS.

FOR HP 14X73 METALIZED STEEL PILES, SEE SPECIAL PROVISIONS.

| SAMPLE BAR REPLACEMENT | |
|---|---|
| SIZE | LENGTH |
| 3 | 6'-2" |
| 4 | 7'-4" |
| 5 | 8'-6" |
| 6 | 9'-8" |
| 7 | 10'-10" |
| 8 | 12'-0" |
| 9 | 13'-2" |
| 10 | 14'-6" |
| 11 | 15'-10" |

NOTE: SAMPLE BAR REPLACEMENT LENGTH BASED ON 30' SAMPLE LENGTH) PLUS TWO SPLICE LENGHTS AND FY = 60ksi.

PROJECT NO. R-1015
CRAVEN COUNTY
STATION: 177+67.00 -L-

SHEET 6 OF 7

STATE OF NORTH CAROLINA
DEPARTMENT OF TRANSPORTATION
RALEIGH

GENERAL DRAWING
FOR BRIDGE OVER EAST PRONG OF SLOCUM CREEK ON US 70 BYPASS BETWEEN US 70 AND SR 1756 (LEFT LANE)

DRAWN BY : J. B. W. DATE : 05/01/2018
CHECKED BY : S. K. C. DATE : 06/22/2018
DESIGN ENGINEER OF RECORD: T.L.B. DATE : 08/23/2018

1998 2018
ALPHA & OMEGA GROUP
CIVIL | STRUCTURAL | WATER RESOURCES
4601 Lake Boone Trail Suite 3C Raleigh, NC 27607
Phone 919 981 0310 Fax 919 981 0451
www.aogroup.com Firm License No. C-1684
A&O PROJECT NO. 2015.042

DocuSigned by:
D794597C456A4F7...
12/7/2018

REFERENCE NO. 5-6

DOCUMENT NOT CONSIDERED FINAL UNLESS ALL SIGNATURES COMPLETED

| REVISIONS | | | | | | |
|---|---|---|---|---|---|---|
| NO. | BY: | DATE: | NO. | BY: | DATE: | |
| 1 | | | 3 | | | |
| 2 | | | 4 | | | |

SHEET NO. S5-6
TOTAL SHEETS 46

STRUCTURE NO. 5

$$$$$$SYSTIME$$$$$
$$$$$$$$$$$$$$$$$$$$$$$$DGN$$$$$$$$$$$$$$$$$$$$$$$$
$$$$USERNAME$$$$

DocuSign Envelope ID: 41B4F490-A702-4BD4-819D-3D05819DE79C

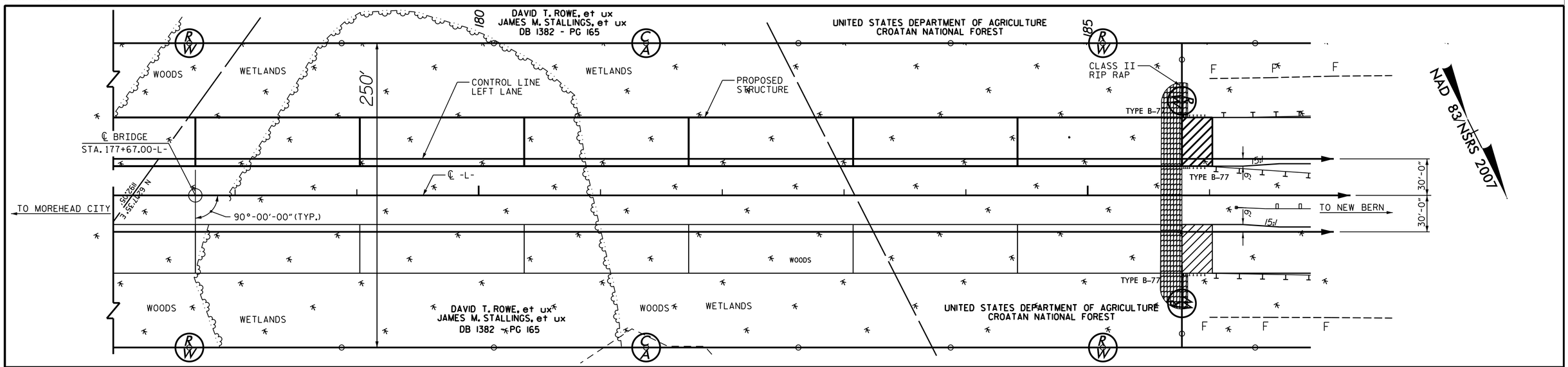


LOCATION SKETCH

## TOTAL BILL OF MATERIAL

| | CONSTRUCTION MAINTENANCE AND REMOVAL OF TEMPORARY ACCESS AT STA. 117+67.00 -L- | PDA TESTING | REINFORCED CONCRETE DECK SLAB | GROOVING BRIDGE FLOORS | CLASS AA CONCRETE | BRIDGE APPROACH SLABS | EPOXY COATED REINFORCING STEEL | PILE DRIVING EQUIPMENT SETUP FOR HP 12x53 STEEL PILES | HP 12 x 53 STEEL PILES | | PILE REDRIVES | CONCRETE BARRIER RAIL | RIP RAP CLASS II (2'-0" THICK) | GEO-TEXTILE FOR DRAINAGE | ELASTOMERIC BEARINGS | EXPANSION JOINT SEALS | MODIFIED 74" PRESTRESSED CONCRETE GIRDERS | | PILE DRIVING EQUIPMENT SETUP FOR HP 14x73 METALIZED STEEL PILES | HP 14 x 73 METALIZED STEEL PILES | |
|---|---|---|---|---|---|---|---|---|---|---|---|---|---|---|---|---|---|---|---|---|---|
| | LUMP SUM | EACH | SQ. FT. | SQ. FT. | CU. YDS. | LUMP SUM | LBS. | EA. | NO. | LIN. FT. | EACH | LIN. FT. | TONS | SY | LUMP SUM | LUMP SUM | NO. | LIN. FT. | EA. | NO. | LIN. FT. |
| SUPERSTRUCTURE | | | 70133 | 60362 | | LUMP SUM | | | | | | 3240 | | | LUMP SUM | LUMP SUM | 60 | 8065 | | | |
| END BENT 1 | | | | | 41.2 | | 6647 | 9 | 9 | 720 | 9 | | 219 | 244 | | | | | | | |
| BENT 1 | | | | | 23.3 | | 4048 | | | | 18 | | | | | | | | 18 | 18 | 1530 |
| BENT 2 | | | | | 23.3 | | 4048 | | | | 18 | | | | | | | | 18 | 18 | 1620 |
| BENT 3 | | | | | 23.3 | | 4048 | | | | 18 | | | | | | | | 18 | 18 | 1710 |
| BENT 4 | | | | | 23.3 | | 4048 | | | | 18 | | | | | | | | 18 | 18 | 1710 |
| BENT 5 | | | | | 23.3 | | 4048 | | | | 18 | | | | | | | | 18 | 18 | 1710 |
| BENT 6 | | | | | 23.3 | | 4048 | | | | 18 | | | | | | | | 18 | 18 | 1440 |
| BENT 7 | | | | | 23.3 | | 4048 | | | | 18 | | | | | | | | 18 | 18 | 1350 |
| BENT 8 | | | | | 23.3 | | 4048 | | | | 18 | | | | | | | | 18 | 18 | 1440 |
| BENT 9 | | | | | 23.3 | | 4048 | | | | 18 | | | | | | | | 18 | 18 | 1530 |
| BENT 10 | | | | | 23.3 | | 4048 | | | | 18 | | | | | | | | 18 | 18 | 1620 |
| BENT 11 | | | | | 23.3 | | 4048 | | | | 18 | | | | | | | | 18 | 18 | 1710 |
| END BENT 2 | | | | | 41.2 | | 6647 | 9 | 9 | 855 | 9 | | 51 | 94 | | | | | | | |
| TOTAL | LUMP SUM | 6 | 70133 | 60362 | 338.7 | LUMP SUM | 57822 | 18 | 18 | 1575 | 214 | 3240 | 270 | 338 | LUMP SUM | LUMP SUM | 60 | 8065 | 198 | 198 | 17370 |

PROJECT NO. R-1015
CRAVEN COUNTY
STATION: 177+67.00 -L-

SHEET 7 OF 7

STATE OF NORTH CAROLINA
DEPARTMENT OF TRANSPORTATION
RALEIGH

GENERAL DRAWING
FOR BRIDGE OVER EAST PRONG OF SLOCUM CREEK ON US 70 BYPASS BETWEEN US 70 AND SR 1756 (LEFT LANE)

DocuSigned by:
D794597C456A4F7...
12/7/2018

1998 2018
ALPHA & OMEGA GROUP
CIVIL | STRUCTURAL | WATER RESOURCES

4601 Lake Boone Trail Suite 3C Raleigh, NC 27607
Phone 919 981 0310 Fax 919 981 0451
www.aogroup.com Firm License No. C-1684

A&O PROJECT NO. 2015.042

REFERENCE NO. 5-7

DOCUMENT NOT CONSIDERED FINAL UNLESS ALL SIGNATURES COMPLETED

| REVISIONS | | | | | | SHEET NO. |
|---|---|---|---|---|---|---|
| NO. | BY: | DATE: | NO. | BY: | DATE: | S5-7 |
| 1 | | | 3 | | | TOTAL SHEETS |
| 2 | | | 4 | | | 46 |

STRUCTURE NO. 5

DRAWN BY : J. B. W. DATE : 05/01/2018
CHECKED BY : S. K. C. DATE : 06/22/2018
DESIGN ENGINEER OF RECORD: T. L. B. DATE : 08/23/2018

$$$$$$SYSTIME$$$$$
$$$$$$$$$$$$$$$$$$$$$$DGN$$$$$$$$$$$$$$$$$$$$$$$$
$$$$USERNAME$$$$

DocuSign Envelope ID: 6709CF31-63FE-4D84-890B-820CC12D2928

# LOAD AND RESISTANCE FACTOR RATING (LRFR) SUMMARY FOR PRESTRESSED CONCRETE GIRDERS

| LEVEL | | VEHICLE | WEIGHT (W) (TONS) | CONTROLLING LOAD RATING (#) | MINIMUM RATING FACTORS (RF) | TONS = W × RF | STRENGTH I LIMIT STATE | | | | | | | | | | | SERVICE III LIMIT STATE | | | | | | COMMENT NUMBER |
|---|---|---|---|---|---|---|---|---|---|---|---|---|---|---|---|---|---|---|---|---|---|---|---|---|
| | | | | | | | LIVE-LOAD FACTORS ($\gamma_{LL}$) | MOMENT | | | | | SHEAR | | | | | LIVE-LOAD FACTORS ($\gamma_{LL}$) | MOMENT | | | | | |
| | | | | | | | | DISTRIBUTION FACTORS (DF) | RATING FACTOR | SPAN | GIRDER LOCATION | DISTANCE FROM LEFT END OF SPAN (ft) | DISTRIBUTION FACTORS (DF) | RATING FACTOR | SPAN | GIRDER LOCATION | DISTANCE FROM LEFT END OF SPAN (ft) | | DISTRIBUTION FACTORS (DF) | RATING FACTOR | SPAN | GIRDER LOCATION | DISTANCE FROM LEFT END OF SPAN (ft) | |
| DESIGN LOAD RATING | | HL-93 (INVENTORY) | N/A | 1 | 1.42 | -- | 1.75 | 0.820 | 1.61 | A | E | 0.5L | 0.720 | 2.37 | A | I | 0.3L | 0.80 | 0.820 | **1.42** | A | E | 0.5L | 1 |
| | | HL-93 (OPERATING) | N/A | | 2.08 | -- | 1.35 | 0.820 | 2.08 | A | E | 0.5L | 0.720 | 3.15 | A | I | 0.3L | N/A | -- | -- | -- | -- | -- | 1 |
| | | HS-20 (INVENTORY) | 36.000 | 2 | 2.13 | 76.680 | 1.75 | 0.820 | 2.41 | A | E | 0.5L | 0.720 | 3.28 | A | I | 0.3L | 0.80 | 0.820 | **2.13** | A | E | 0.5L | 1 |
| | | HS-20 (OPERATING) | 36.000 | | 3.13 | 112.680 | 1.35 | 0.820 | 3.13 | A | E | 0.5L | 0.720 | 4.34 | A | I | 0.3L | N/A | -- | -- | -- | -- | -- | 1 |
| LEGAL LOAD RATING | SINGLE VEHICLE (SV) | SNSH | 13.500 | | 5.23 | 70.605 | 1.40 | 0.820 | 7.97 | A | E | 0.5L | 0.720 | 11.60 | A | I | 0.3L | 0.80 | 0.820 | 5.23 | A | E | 0.5L | 1 |
| | | SNGARBS2 | 20.000 | | 3.71 | 74.200 | 1.40 | 0.820 | 5.66 | A | E | 0.5L | 0.720 | 8.02 | A | I | 0.3L | 0.80 | 0.820 | 3.71 | A | E | 0.5L | 1 |
| | | SNAGRIS2 | 22.000 | | 3.44 | 75.680 | 1.40 | 0.820 | 5.25 | A | E | 0.5L | 0.720 | 7.37 | A | I | 0.3L | 0.80 | 0.820 | 3.44 | A | E | 0.5L | 1 |
| | | SNCOTTS3 | 27.250 | | 2.60 | 70.850 | 1.40 | 0.820 | 3.96 | A | E | 0.5L | 0.720 | 5.62 | A | I | 0.3L | 0.80 | 0.820 | 2.60 | A | E | 0.5L | 1 |
| | | SNAGGRS4 | 34.925 | | 2.10 | 73.343 | 1.40 | 0.820 | 3.20 | A | E | 0.5L | 0.720 | 4.52 | A | I | 0.3L | 0.80 | 0.820 | 2.10 | A | E | 0.5L | 1 |
| | | SNS5A | 35.550 | | 2.06 | 73.233 | 1.40 | 0.820 | 3.13 | A | E | 0.5L | 0.720 | 4.54 | A | I | 0.3L | 0.80 | 0.820 | 2.06 | A | E | 0.5L | 1 |
| | | SNS6A | 39.950 | | 1.86 | 74.307 | 1.40 | 0.820 | 2.93 | A | E | 0.5L | 0.720 | 4.08 | A | I | 0.3L | 0.80 | 0.820 | 1.86 | A | E | 0.5L | 1 |
| | | SNS7B | 42.000 | | 1.93 | 81.060 | 1.40 | 0.820 | 2.70 | A | E | 0.5L | 0.720 | 3.95 | A | I | 0.3L | 0.80 | 0.820 | 1.93 | A | E | 0.5L | 1 |
| | TRUCK TRACTOR SEMI-TRAILER (TTST) | TNAGRIT3 | 33.000 | | 2.26 | 74.580 | 1.40 | 0.820 | 3.44 | A | E | 0.5L | 0.720 | 4.94 | A | I | 0.3L | 0.80 | 0.820 | 2.26 | A | E | 0.5L | 1 |
| | | TNT4A | 33.075 | | 2.26 | 74.750 | 1.40 | 0.820 | 3.45 | A | E | 0.5L | 0.720 | 4.84 | A | I | 0.3L | 0.80 | 0.820 | 2.26 | A | E | 0.5L | 1 |
| | | TNT6A | 41.600 | | 1.82 | 75.712 | 1.40 | 0.820 | 2.78 | A | E | 0.5L | 0.720 | 4.15 | A | I | 0.3L | 0.80 | 0.820 | 1.82 | A | E | 0.5L | 1 |
| | | TNT7A | 42.000 | | 1.82 | 76.440 | 1.40 | 0.820 | 2.77 | A | E | 0.5L | 0.720 | 4.07 | A | I | 0.3L | 0.80 | 0.820 | 1.82 | A | E | 0.5L | 1 |
| | | TNT7B | 42.000 | | 1.85 | 77.700 | 1.40 | 0.820 | 2.82 | A | E | 0.5L | 0.720 | 3.89 | A | I | 0.3L | 0.80 | 0.820 | 1.85 | A | E | 0.5L | 1 |
| | | TNAGRIT4 | 43.000 | | 1.78 | 76.540 | 1.40 | 0.820 | 2.72 | A | E | 0.5L | 0.720 | 3.77 | A | I | 0.3L | 0.80 | 0.820 | 1.78 | A | E | 0.5L | 1 |
| | | TNAGT5A | 45.000 | | 1.69 | 76.050 | 1.40 | 0.820 | 2.58 | A | E | 0.5L | 0.720 | 3.69 | A | I | 0.3L | 0.80 | 0.820 | 1.69 | A | E | 0.5L | 1 |
| | | TNAGT5B | 45.000 | 3 | 1.68 | 76.600 | 1.40 | 0.820 | 2.56 | A | E | 0.5L | 0.720 | 3.57 | A | I | 0.3L | 0.80 | 0.820 | **1.68** | A | E | 0.5L | 1 |

## LOAD FACTORS:

| DESIGN LOAD RATING FACTORS | LIMIT STATE | $\gamma_{DC}$ | $\gamma_{DW}$ |
|---|---|---|---|
| | STRENGTH I | 1.25 | 1.50 |
| | SERVICE III | 1.00 | 1.00 |

## NOTES:

MINIMUM RATING FACTORS ARE BASED ON THE STRENGTH I AND SERVICE III LIMIT STATES.

ALLOWABLE STRESSES FOR SERVICE III LIMIT STATE ARE AS REQUIRED FOR DESIGN.

## COMMENTS:

1. ALL SPANS ARE ANALYTICALLY IDENTICAL.

## 74" MBT SECTION PROPERTIES

Ag = 881.6 $in^2$
Ig = 636755 $in^4$
Yc = 36.447 in
Wg = 918.3 LB./FT.
y/s = 3.401 in

| (#) CONTROLLING LOAD RATING |
|---|
| (1) DESIGN LOAD RATING (HL-93) |
| (2) DESIGN LOAD RATING (HS-20) |
| (3) LEGAL LOAD RATING ** |
| ** SEE CHART FOR VEHICLE TYPE |
| **GIRDER LOCATION** |
| I - INTERIOR GIRDER |
| E - EXTERIOR GIRDER |

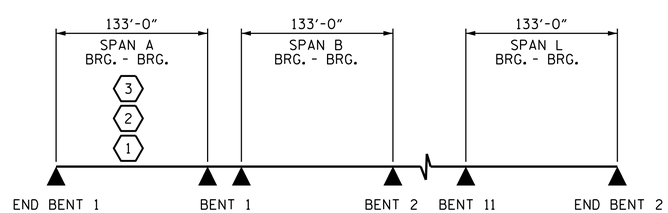


LRFR SUMMARY

PROJECT NO. R-1015
CRAVEN COUNTY
STATION: 177+67.00 -L-

STATE OF NORTH CAROLINA
DEPARTMENT OF TRANSPORTATION
RALEIGH

STANDARD
LRFR SUMMARY FOR PRESTRESSED CONCRETE GIRDERS
(NON-INTERSTATE TRAFFIC)
(LEFT LANE)

ALPHA & OMEGA GROUP
CIVIL | STRUCTURAL | WATER RESOURCES
4601 Lake Boone Trail Suite 3C Raleigh, NC 27607
Phone 919 981 0310 Fax 919 981 0451
www.aogroup.com Firm License No. C-1684
A&O PROJECT NO. 2015.042

DocuSigned by:
D794597C456A4F7...
11/9/2018 7:44:29 AM EST
REFERENCE NO. 5-8
DOCUMENT NOT CONSIDERED FINAL UNLESS ALL SIGNATURES COMPLETED

| REVISIONS | | | | | | |
|---|---|---|---|---|---|---|
| NO. | BY: | DATE: | NO. | BY: | DATE: | |
| 1 | | | 3 | | | |
| 2 | | | 4 | | | |

SHEET NO. S5-8
TOTAL SHEETS 46

STRUCTURE NO. 5

STD. NO. LRFR1

DRAWN BY : J. B. W. DATE : 07/01/2018
CHECKED BY : S. K. C. DATE : 7/05/2018
DESIGN ENGINEER OF RECORD: T.L.B., PE DATE : 8/29/2018

$$$$$$SYSTIME$$$$$
$$$$$$$$$$$$$$$$$$$$DGN$$$$$$$$$$$$$$$$$$$$$$$$
$$$$USERNAME$$$$

DocuSign Envelope ID: 41B4F490-A702-4BD4-819D-3D05819DE79C

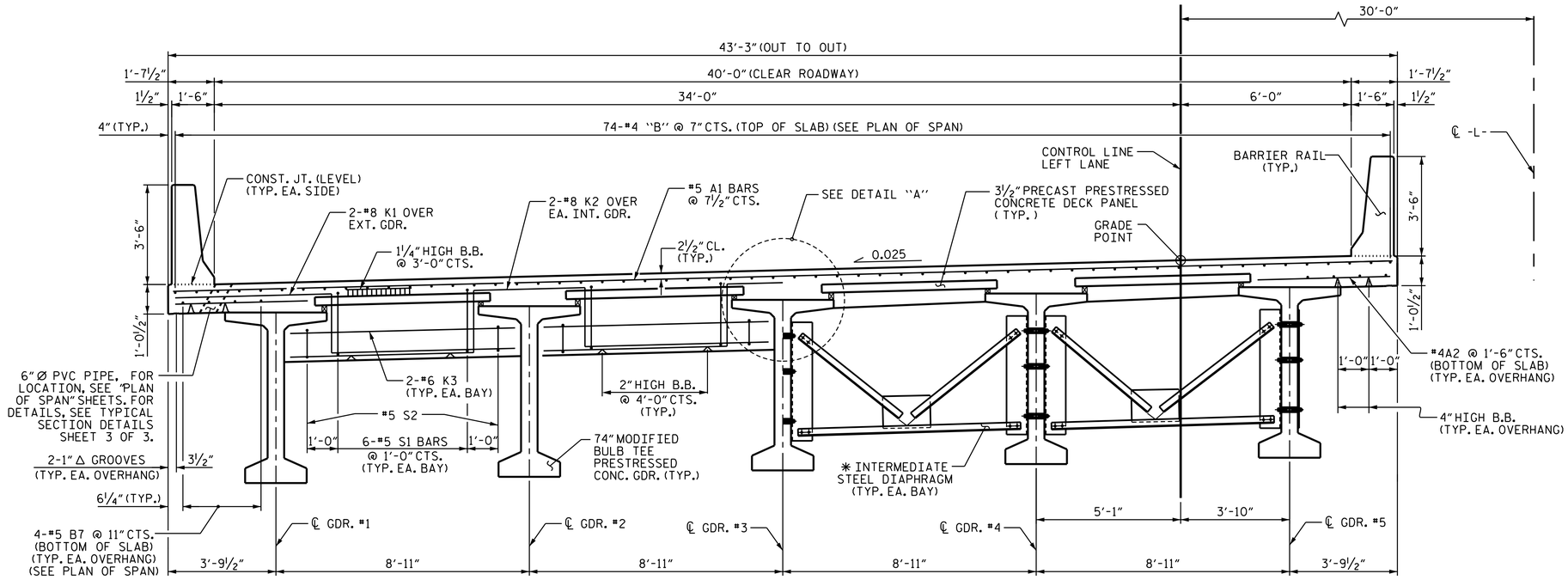


PARTIAL TYPICAL SECTION - BENT DIAPHRAGM

(BENTS 1, 3, 6, 9 AND 11)

PARTIAL TYPICAL SECTION AT INTERMEDIATE DIAPHRAGM

# TYPICAL SECTION

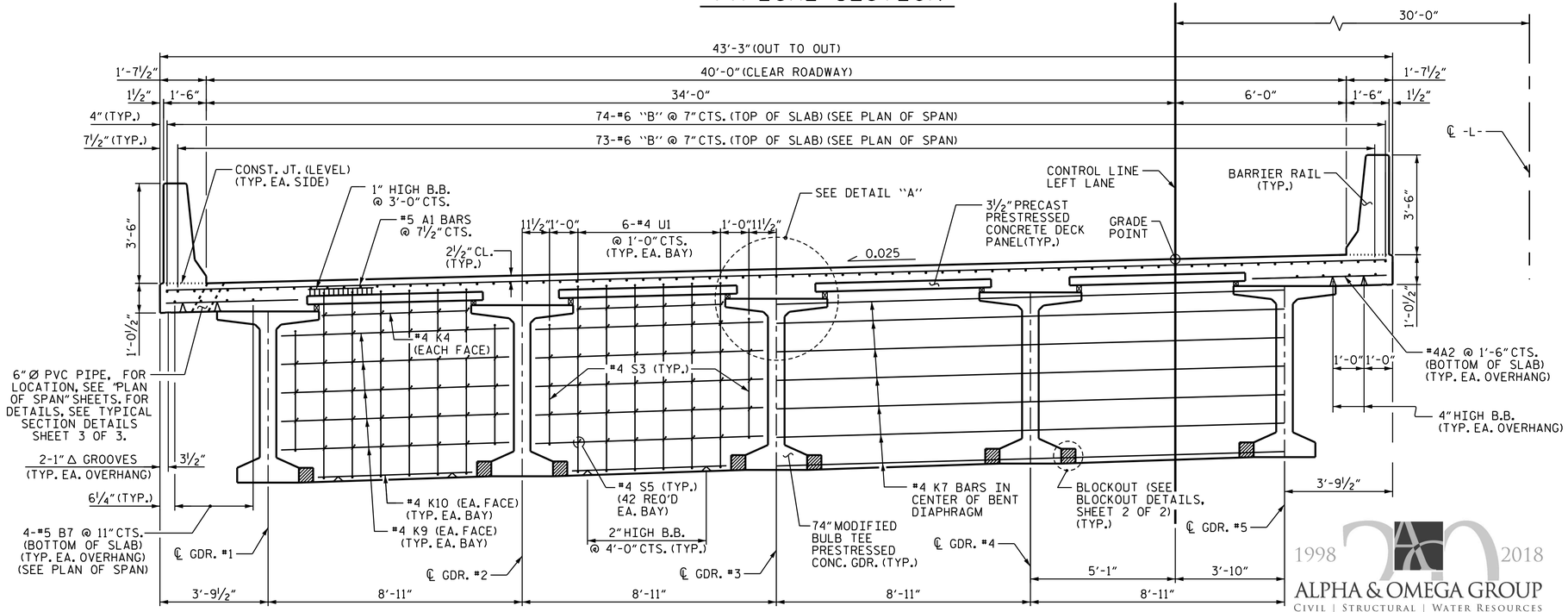


TYPICAL SECTION-CONTINUOUS BENT DIAPHRAGM

(AT BENTS 2, 4, 5, 7, 8, & 10)

## NOTES

LONGITUDINAL STEEL MAY BE SHIFTED SLIGHTLY, AS NECESSARY, TO AVOID INTERFERENCE WITH STIRRUPS IN PRESTRESSED CONCRETE GIRDERS.

PREVIOUSLY CAST CONCRETE IN A CONTINUOUS UNIT SHALL HAVE ATTAINED A MINIMUM COMPRESSIVE STRENGTH OF 3,000 PSI BEFORE ADDITIONAL CONCRETE IS CAST IN THE UNIT.

BARRIER RAIL IN A CONTINUOUS UNIT SHALL NOT BE CAST UNTIL ALL SLAB CONCRETE IN THE UNIT HAS BEEN CAST AND HAS REACHED A MINIMUM COMPRESSIVE STRENGTH OF 3,000 PSI.

PRECAST PANELS SHALL BE DESIGNED FOR AN ALLOWABLE TENSILE STRESS OF 0 PSI IN THE PRECOMPRESSED TENSILE ZONE UNDER ALL LOADING CONDITIONS.

ALL BAR SUPPORTS USED IN THE BARRIER RAIL, DECK, AND ALL INCIDENTAL REINFORCING STEEL SHALL BE EPOXY COATED IN ACCORDANCE WITH THE STANDARD SPECIFICATIONS.

✳ FOR INTERMEDIATE STEEL DIAPHRAGM DETAILS, SEE "INTERMEDIATE STEEL DIAPHRAGMS FOR 74" MODIFIED BULB TEE PRESTRESSED CONCRETE GIRDERS" SHEET.

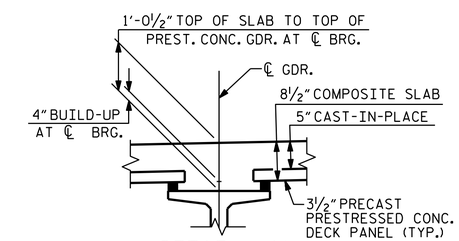


DETAIL "A"

PROJECT NO. R-1015

CRAVEN COUNTY

STATION: 177+67.00 -L-

SHEET 1 OF 3

STATE OF NORTH CAROLINA
DEPARTMENT OF TRANSPORTATION
RALEIGH

SUPERSTRUCTURE
TYPICAL SECTION
(LEFT LANE)

DRAWN BY : J. B. W. DATE : 6/20/2018
CHECKED BY : S. K. C. DATE : 6/22/2018
DESIGN ENGINEER OF RECORD: T.L.B., PE DATE : 8/29/2018

ALPHA & OMEGA GROUP
CIVIL | STRUCTURAL | WATER RESOURCES
4601 Lake Boone Trail Suite 3C Raleigh, NC 27607
Phone 919 981 0310 Fax 919 981 0451
www.aogroup.com Firm License No. C-1684
A&O PROJECT NO: 2015.042

DocuSigned by:
D794597C456A4F7...
12/7/2018

REFERENCE NO. 5-9

DOCUMENT NOT CONSIDERED FINAL UNLESS ALL SIGNATURES COMPLETED

| REVISIONS | | | | | | SHEET NO. |
|---|---|---|---|---|---|---|
| NO. | BY: | DATE: | NO. | BY: | DATE: | S5-9 |
| 1 | | | 3 | | | TOTAL SHEETS |
| 2 | | | 4 | | | 46 |

STRUCTURE NO. 5

$$$$$$SYSTIME$$$$$
$$$$$$$$$$$$$$$$$$$$$$$$DGN$$$$$$$$$$$$$$$$$$$$$$$$
$$$$USERNAME$$$$

DocuSign Envelope ID: 41B4F490-A702-4BD4-819D-3D05819DE79C

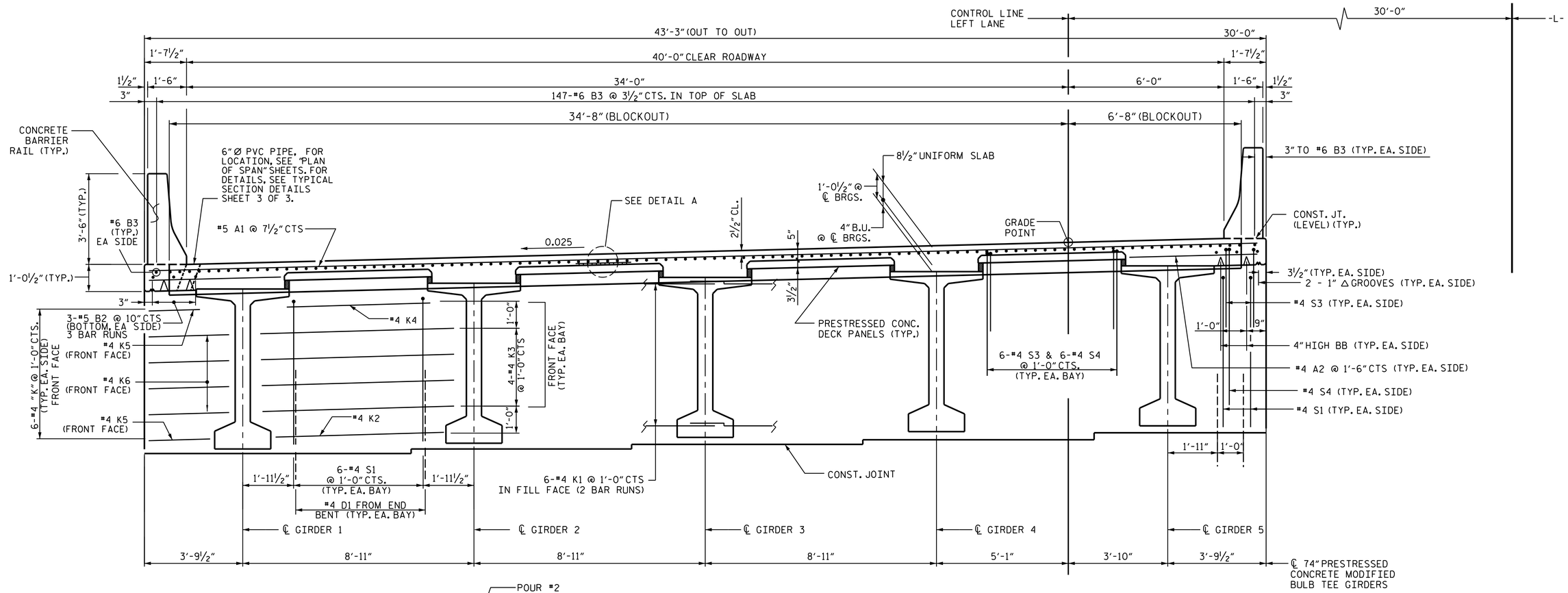


## TYPICAL SECTION AT INTEGRAL END BENT

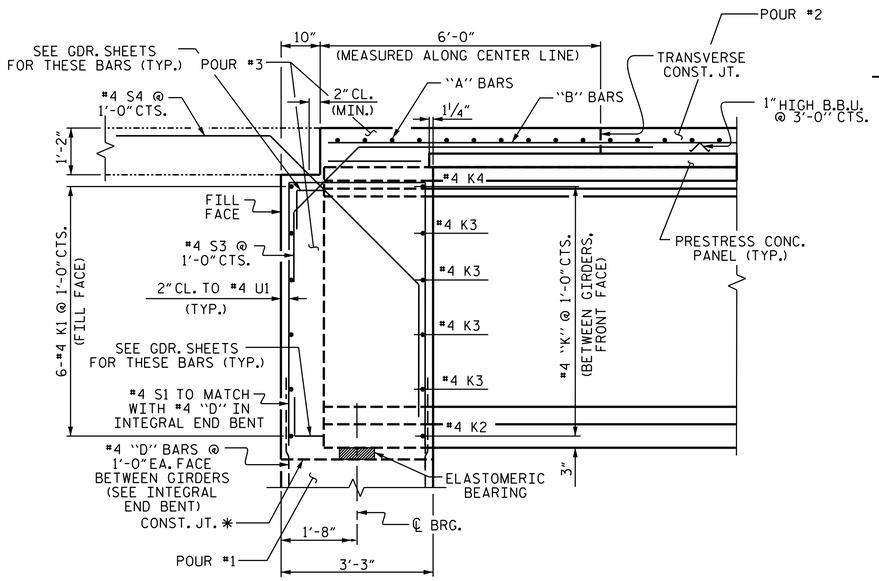


## SECTION THRU INTEGRAL END BENT DIAPHRAGM

THE TOP SURFACE OF THE END BENT CAP AND WINGS EXCLUDING THE ✱ BEARING AREA SHALL BE RAKED TO A DEPTH OF ¼"

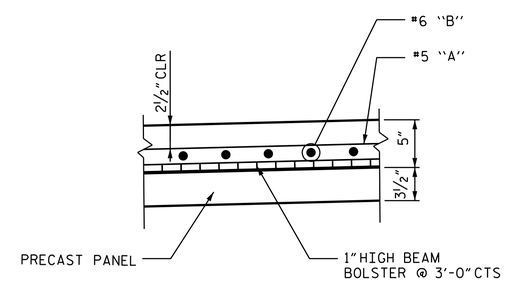


## DETAIL "A"

PROJECT NO. R-1015
CRAVEN COUNTY
STATION: 287+62.50 -L-

SHEET 2 OF 3

STATE OF NORTH CAROLINA
DEPARTMENT OF TRANSPORTATION
RALEIGH

SUPERSTRUCTURE
TYPICAL SECTION AT INTEGRAL END BENT
(LEFT LANE)

1998 2018
ALPHA & OMEGA GROUP
CIVIL | STRUCTURAL | WATER RESOURCES

4601 Lake Boone Trail Suite 3C Raleigh, NC 27607
Phone 919 981 0310 Fax 919 981 0451
www.aogroup.com Firm License No. C-1684
A&O PROJECT NO: 2015.042

DocuSigned by:
D794597C456A4F7...
12/7/2018

REFERENCE No. 5-10

DOCUMENT NOT CONSIDERED FINAL UNLESS ALL SIGNATURES COMPLETED

| REVISIONS | | | | | | | |
|---|---|---|---|---|---|---|---|
| NO. | BY: | DATE: | NO. | BY: | DATE: | | |
| 1 | | | 3 | | | | |
| 2 | | | 4 | | | | |

SHEET NO. S5-10
TOTAL SHEETS 46

STRUCTURE No. 5

| | | | |
|---|---|---|---|
| DRAWN BY : | J. B. W. | DATE : | 7/13/2018 |
| CHECKED BY : | S. K. C. | DATE : | 7/16/2018 |
| DESIGN ENGINEER OF RECORD: | T. L. B. | DATE : | 8/29/2018 |

$$$$$$SYSTIME$$$$$
$$$$$$$$$$$$$$$$$$$$$$$$DGN$$$$$$$$$$$$$$$$$$$$$$$$
$$$$USERNAME$$$$

DocuSign Envelope ID: 6709CF31-63FE-4D84-890B-820CC12D2928

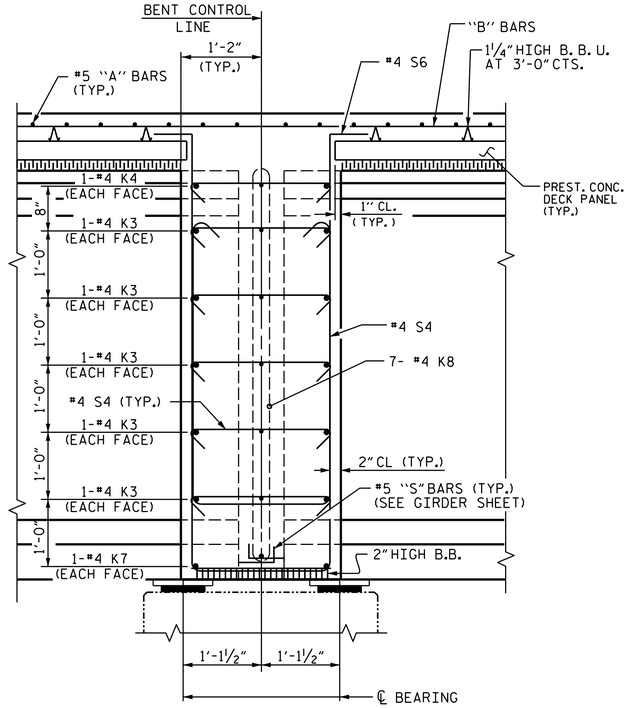


## SECTION AT CONTINUOUS BENT DIAPHRAGM

(AT BENTS 2, 4, 5, 7, 8 AND 10)

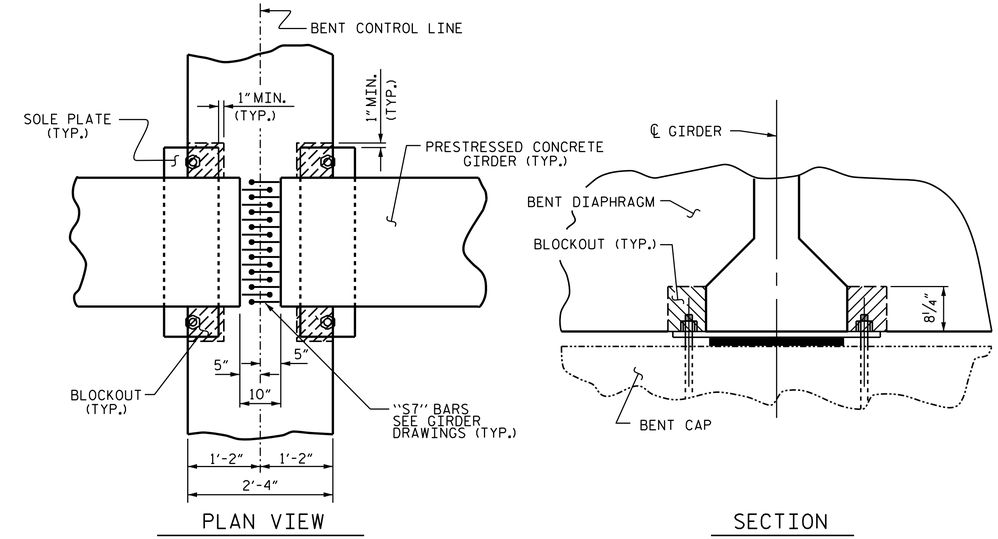


## CONTINUOUS BENT DIAPHRAGM BLOCK-OUT DETAIL

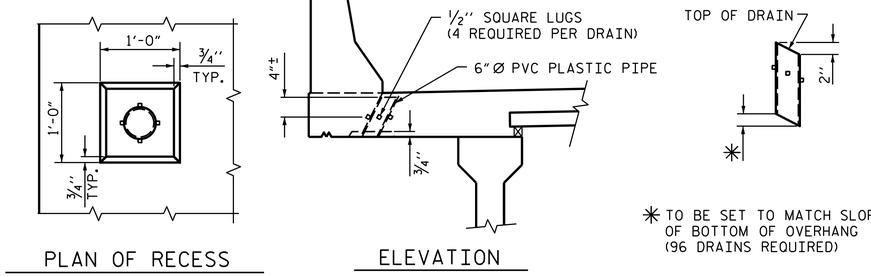


## PIPE DETAIL

TOP OF FLOOR DRAINS TO BE SET ⅜" BELOW SURFACE OF SLAB.

4 - ½" SQUARE LUGS TO BE GLUED TO THE P.V.C. PLASTIC PIPE AT EQUAL SPACES AROUND THE PIPE DRAIN APPROXIMATELY 4" FROM THE TOP OF THE PIPE.

THE 6" Ø PVC PLASTIC PIPE AND FITTINGS SHALL BE SCHEDULE 40 AND CONFORM TO ASTM D1785.

## DRAIN DETAILS

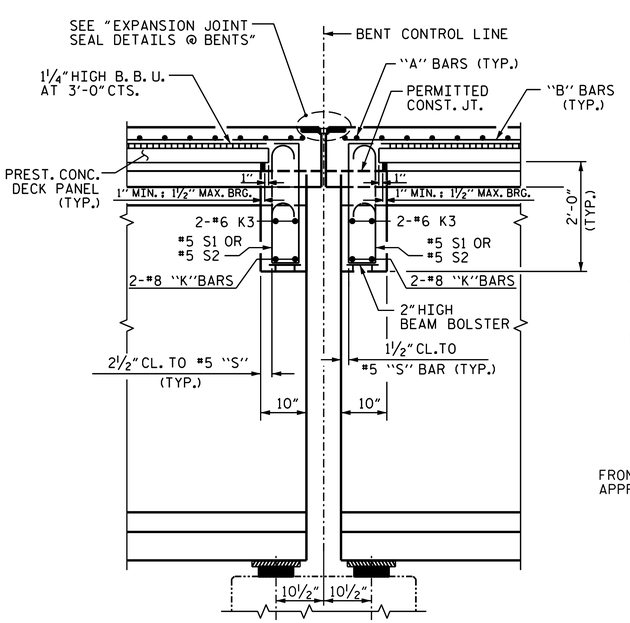


## SECTION AT BENT DIAPHRAGM

(AT BENTS 1, 3, 6, 9, & 11)

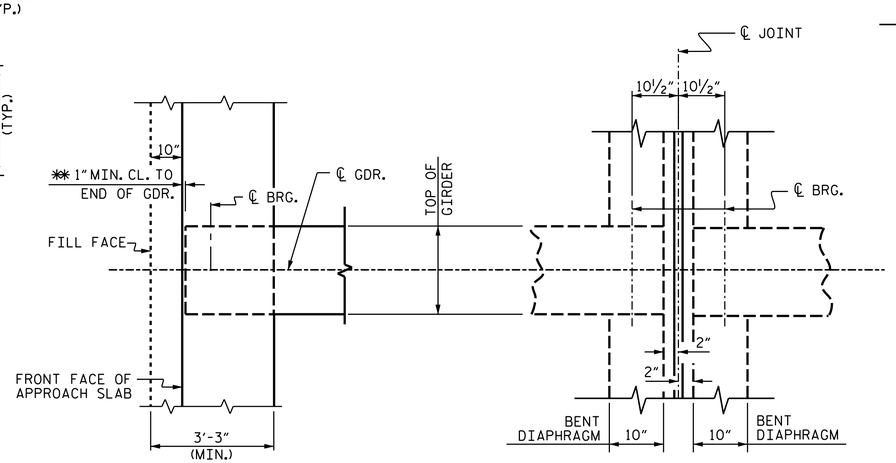


## PLAN

PROJECT NO. R-1015

CRAVEN COUNTY

STATION: 177+67.00 -L-

SHEET 3 OF 3

STATE OF NORTH CAROLINA
DEPARTMENT OF TRANSPORTATION
RALEIGH

SUPERSTRUCTURE
TYPICAL SECTION DETAILS
(LEFT LANE)

| REVISIONS | | | | | | | SHEET NO. |
|---|---|---|---|---|---|---|---|
| NO. | BY: | DATE: | NO. | BY: | DATE: | | S5-11 |
| 1 | | | 3 | | | | TOTAL SHEETS |
| 2 | | | 4 | | | | 46 |

STRUCTURE NO. 5

DRAWN BY : J. B. W. DATE : 6/20/2018
CHECKED BY : S. K. C. DATE : 6/22/2018
DESIGN ENGINEER OF RECORD: T. L. B., PE DATE : 8/29/2018

1998 20 2018
ALPHA & OMEGA GROUP
CIVIL | STRUCTURAL | WATER RESOURCES

4601 Lake Boone Trail Suite 3C Raleigh, NC 27607
Phone 919 981 0310 Fax 919 981 0451
www.aogroup.com Firm License No. C-1684
A&O PROJECT NO. 2015.042

DocuSigned by:
D794597C456A4F7...
11/9/2018 7:44:29 AM EST
REFERENCE NO. S5-11

DOCUMENT NOT CONSIDERED FINAL UNLESS ALL SIGNATURES COMPLETED

$$$$$$SYSTIME$$$$$
$$$$$$$$$$$$$$$$$$$$$$$$DGN$$$$$$$$$$$$$$$$$$$$$$$$
$$$$USERNAME$$$$

DocuSign Envelope ID: 6709CF31-63FE-4D84-890B-820CC12D2928

## DECK PANEL SUPPORTS

THE CONTRACTOR SHALL PROVIDE THE DECK PANEL SUPPORT SYSTEM SHOWN OR HE MAY SUBMIT A DECK PANEL SUPPORT SYSTEM OF HIS OWN DESIGN TO THE ENGINEER FOR APPROVAL.

POLYSTYRENE SUPPORT SYSTEM

1. ALL POLYSTYRENE SHALL BE DOW STYROFOAM 60 HIGH-LOAD, UC INDUSTRIES FOAMULAR 600 OR APPROVED EQUAL.
2. THE POLYSTYRENE SUPPORT SYSTEM SHALL CONSIST OF ONE LAYER WITH A MINIMUM WIDTH OF 1½" AND A MAXIMUM WIDTH OF 2". THE POLYSTYRENE SHALL HAVE ½" X ½" WIDE SLOTS OR ½" DIAMETER HOLES AT 4'-0" CENTERS STAGGERED ALONG THE TOP AND BOTTOM.
3. THE POLYSTYRENE MAY BE CUT AND PLACED ON EDGE AS NECESSARY TO MATCH THE REQUIRED BUILDUP PROFILE ALONG THE GIRDER.
4. ADHESIVE, AS APPROVED BY THE ENGINEER, SHALL BE APPLIED TO THE TOP OF THE GIRDER IN A CONTINUOUS BEAD AND IN SUFFICIENT AMOUNT TO PREVENT THE POLYSTYRENE FROM BLOWING OUT AND TO PREVENT GAPS FROM FORMING BETWEEN THE POLYSTYRENE AND THE GIRDER. PRIOR TO PLACEMENT OF THE DECK PANELS, THE ADHESIVE SHALL ALSO BE APPLIED TO THE TOP OF THE POLYSTYRENE.
5. CONCRETE-FILLED BUCKETS, STACKS OF DECK PANELS, BUNDLED REINFORCING BARS OR OTHER HEAVY CONCENTRATED LOADS WILL NOT BE PERMITTED ON THE DECK PANEL ONCE THE PANEL HAS BEEN PLACED ON THE POLYSTYRENE SUPPORT SYSTEM.

## GENERAL NOTES

1. THE DESIGN COMPRESSIVE STRENGTH (f'c) FOR THE CONCRETE IN PRESTRESSED PANELS SHALL BE 5000 PSI MINIMUM AT 28 DAYS. COMPRESSIVE STRENGTH OF CONCRETE AT TIME OF RELEASE OF STRANDS SHALL BE 4000 PSI MINIMUM.
2. THE PRECAST PRESTRESSED PANEL SHALL HAVE A THICKNESS OF 3 ½" WITH THE PRESTRESSED STRANDS LOCATED AT HALF THE DEPTH OF THE PANEL.
3. FOR SKEWED SPANS, TRAPEZOIDAL CLOSURE PANELS SHALL HAVE A MINIMUM WIDTH OF 2 FEET ON THE SHORT SIDE.
4. ALL PRESTRESSING STRANDS SHALL EXTEND 2" BEYOND THE PANEL EDGES.
5. SHEAR REINFORCING OF 0.60 SQ. INCHES OF REINFORCING STEEL PER 10 SQ. FEET OF PANEL SURFACE SHALL BE PROVIDED IN THE PANEL TO ENSURE COMPOSITE ACTION BETWEEN PANEL AND THE CAST-IN-PLACE CONCRETE. SHEAR REINFORCEMENT SHALL BE MADE OF WELDED WIRE HAVING A MINIMUM YIELD STRENGTH OF 60 KSI.
6. SHEAR REINFORCEMENT AND LIFTING DEVICES SHALL BE CONSTRUCTED AND PLACED SO AS TO AVOID ANY INTERFERENCE WITH REINFORCING STEEL IN THE CAST-IN-PLACE DECK SLAB AND TO ALLOW FOR PROPER CONCRETE CONSOLIDATION IN THE DECK PANEL.
7. SHIFT LONGITUDINAL "B" BARS AS NECESSARY TO OBTAIN A MINIMUM CLEAR DISTANCE OF 2 ½" TO THE RIGHT OR LEFT OF THE EDGE OF THE DECK PANEL. IF, IN SHIFTING TO OBTAIN THIS CLEARANCE, THE "B" BAR INTERFERES WITH THE STIRRUP IN THE TOP OF THE GIRDER THE "B" BAR MAY BE ELIMINATED.
8. WHEN CASTING THE DECK, PLACE CONCRETE FIRST OVER THE GIRDERS IN CONTINUOUS STRIPS A MINIMUM OF THREE PANEL LENGTHS AHEAD OF THE REST OF THE CONCRETE. CAREFULLY VIBRATE THE CONCRETE OVER THE GIRDERS SO THAT CONCRETE COMPLETELY FILLS THE AREA UNDER THE DECK PANEL OVERHANGS. THEN PLACE AND VIBRATE THE REMAINING DECK CONCRETE.

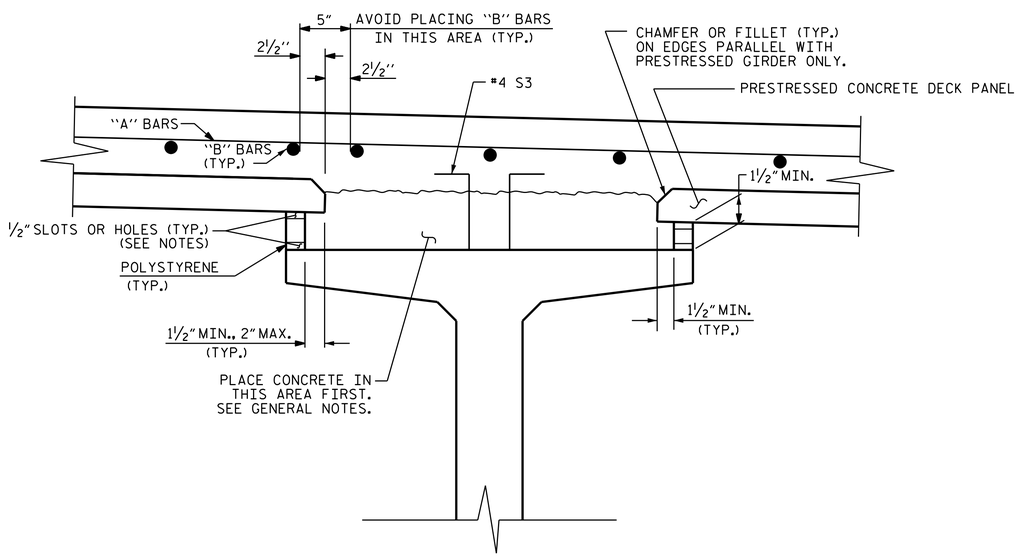


POLYSTYRENE SUPPORT

PROJECT NO. R-1015
CRAVEN COUNTY
STATION: 177+67.00 -L-

STATE OF NORTH CAROLINA
DEPARTMENT OF TRANSPORTATION
RALEIGH

STANDARD

PRECAST PRESTRESSED CONCRETE DECK PANELS
(LEFT LANE)

1998 2018
ALPHA & OMEGA GROUP
CIVIL | STRUCTURAL | WATER RESOURCES
4601 Lake Boone Trail Suite 3C Raleigh, NC 27607
Phone 919 981 0310 Fax 919 981 0451
www.aogroup.com Firm License No. C-1684
A&O PROJECT NO. 2015.042

DocuSigned by:
D794597C456A4F7...
11/9/2018 7:44:29 AM EST
REFERENCE No. 5-12
DOCUMENT NOT CONSIDERED FINAL UNLESS ALL SIGNATURES COMPLETED

| REVISIONS | | | | | | SHEET NO. |
|---|---|---|---|---|---|---|
| NO. | BY: | DATE: | NO. | BY: | DATE: | S5-12 |
| 1 | | | 3 | | | TOTAL SHEETS |
| 2 | | | 4 | | | 46 |

STRUCTURE No. 5

STD. NO. PDP1

DRAWN BY : J. B. W. DATE : 7/9/2018
CHECKED BY : S. K. C. DATE : 7/9/2018
DESIGN ENGINEER OF RECORD: T.L.B., PE DATE : 08/29/18

$$$$$$SYSTIME$$$$$
$$$$$$$$$$$$$$$$$$$$DGN$$$$$$$$$$$$$$$$$$$$$$$$
$$$$USERNAME$$$$

DocuSign Envelope ID: 41B4F490-A702-4BD4-819D-3D05819DE79C

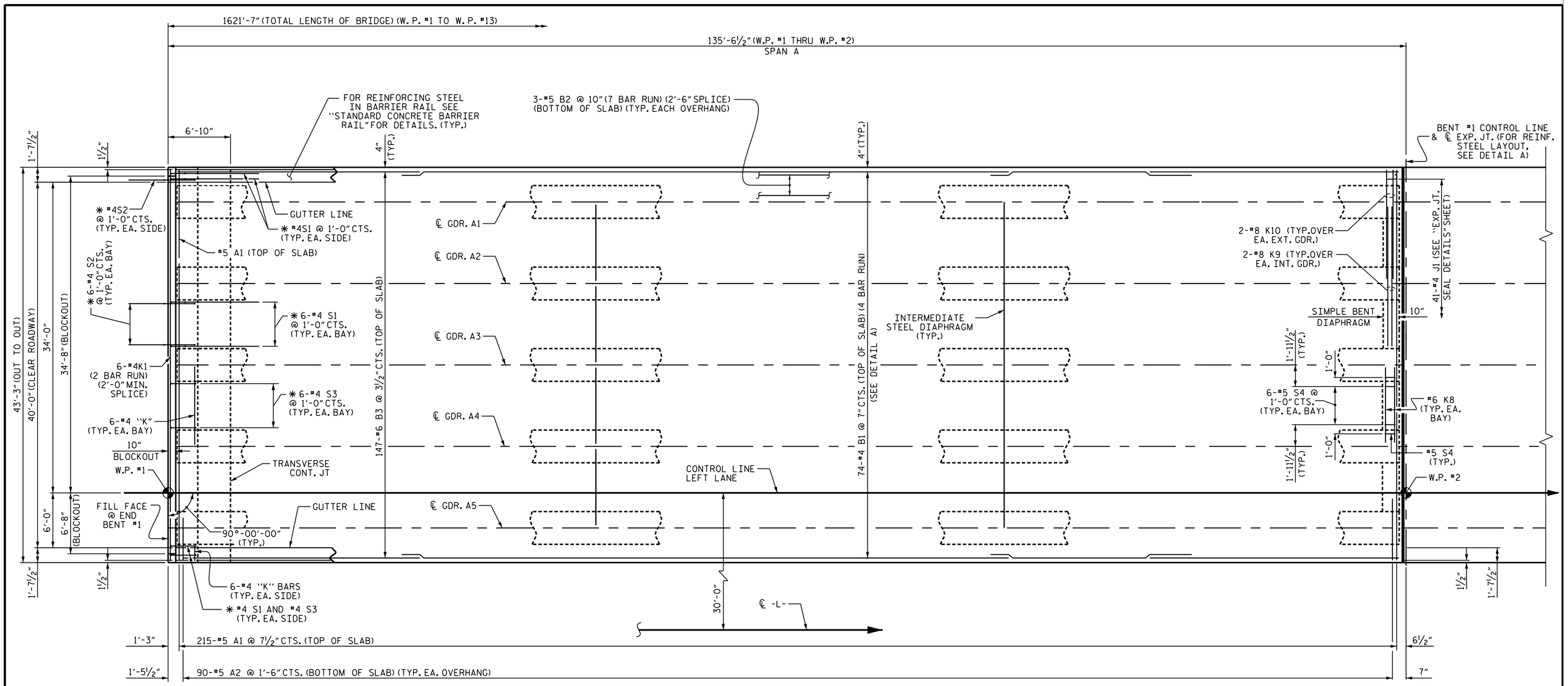


## PLAN OF SPAN A

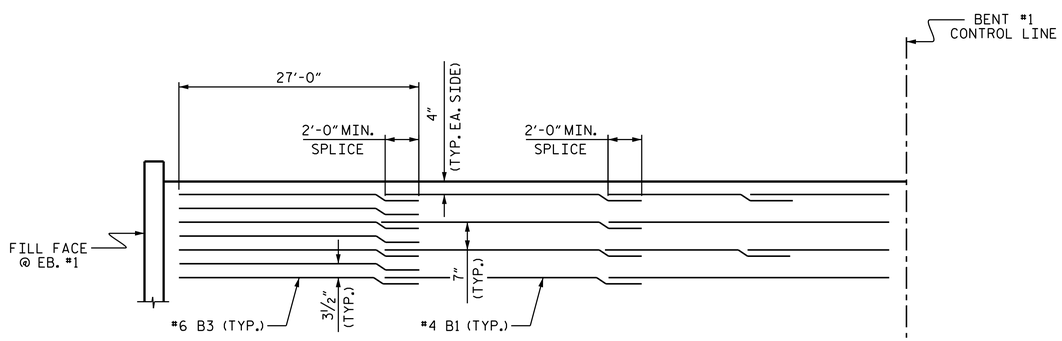


## DETAIL "A"
## "B" BARS DETAILS

## NOTES

FOR PLACEMENT OF #4 J1 BAR, SEE "EXPANSION JOINT SEAL DETAILS" SHEETS.

✱ #4 S1, #4 S2, & #4 S3 TO MATCH WITH #4 "D" BARS IN INTEGRAL END BENT CAP. FOR LOCATION OF INTERMEDIATE DIAPHRAGMS, SEE "GIRDER LAYOUT"

SEE SHEET S5-31 FOR TRANSVERSE CONSTRUCTION JT. DETAIL

PROJECT NO. R-1015
CRAVEN COUNTY
STATION: 177+67.00 -L-

SHEET 1 OF 6

STATE OF NORTH CAROLINA
DEPARTMENT OF TRANSPORTATION
RALEIGH

SUPERSTRUCTURE
PLAN OF SPAN A
(LEFT LANE)

DRAWN BY : J. B. W. DATE : 6/21/2018
CHECKED BY : S. K. C. DATE : 7/5/18
DESIGN ENGINEER OF RECORD: T.L.B., PE DATE : 8/28/18

$$$$$$SYSTIME$$$$$
$$$$$$$$$$$$$$$$$$$$$$$$DGN$$$$$$$$$$$$$$$$$$$$$$$$
$$$$USERNAME$$$$

1998 2018
ALPHA & OMEGA GROUP
CIVIL | STRUCTURAL | WATER RESOURCES

4601 Lake Boone Trail Suite 3C Raleigh, NC 27607
Phone 919 981 0310 Fax 919 981 0451
www.aogroup.com Firm License No. C-1684
A&O PROJECT NO. 2015.042

DocuSigned by:
D794597C456A4F7...
12/7/2018

REFERENCE NO. 5-13
DOCUMENT NOT CONSIDERED FINAL UNLESS ALL SIGNATURES COMPLETED

| REVISIONS | | | | | | |
|---|---|---|---|---|---|---|
| NO. | BY: | DATE: | NO. | BY: | DATE: | |
| 1 | | | 3 | | | |
| 2 | | | 4 | | | |

SHEET NO. S5-13
TOTAL SHEETS 46

STRUCTURE NO. 5

DocuSign Envelope ID: 41B4F490-A702-4BD4-819D-3D05819DE79C

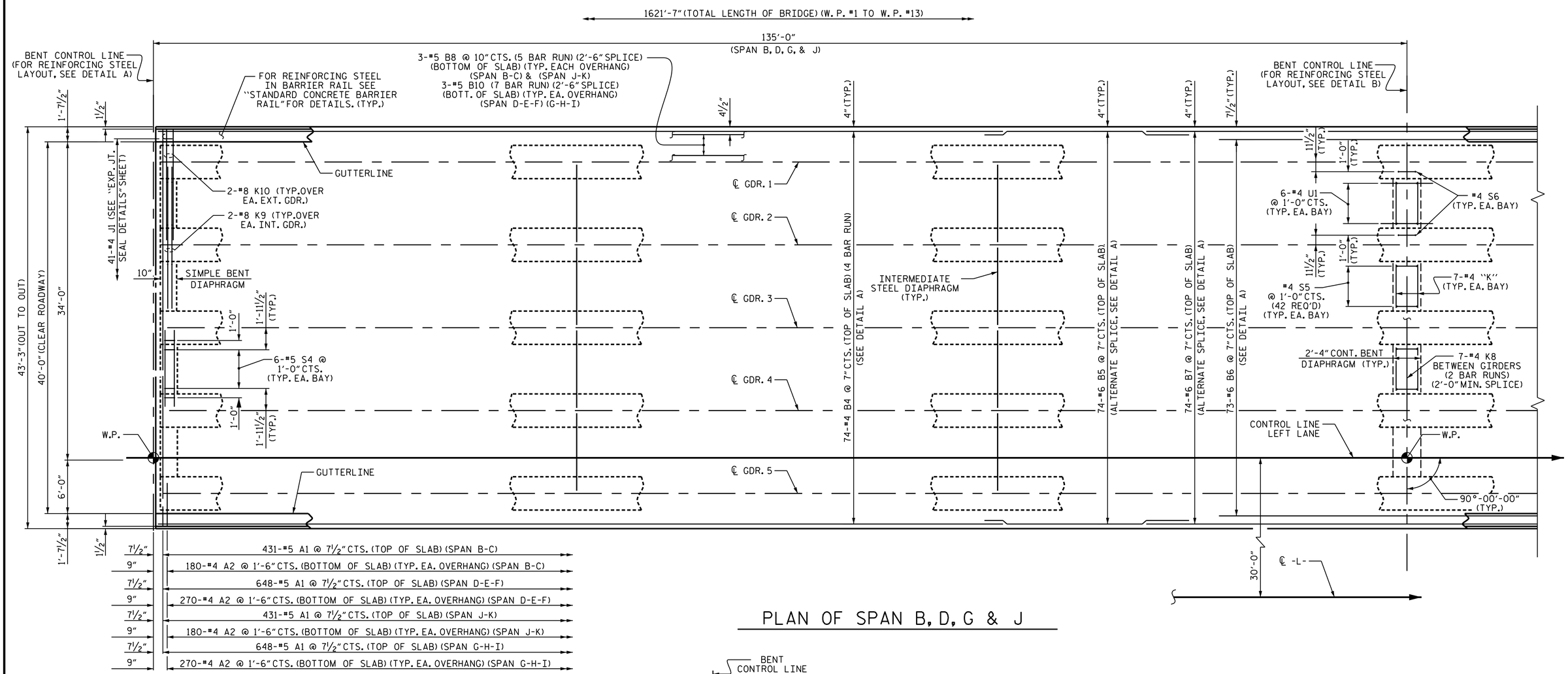


## PLAN OF SPAN B, D, G & J

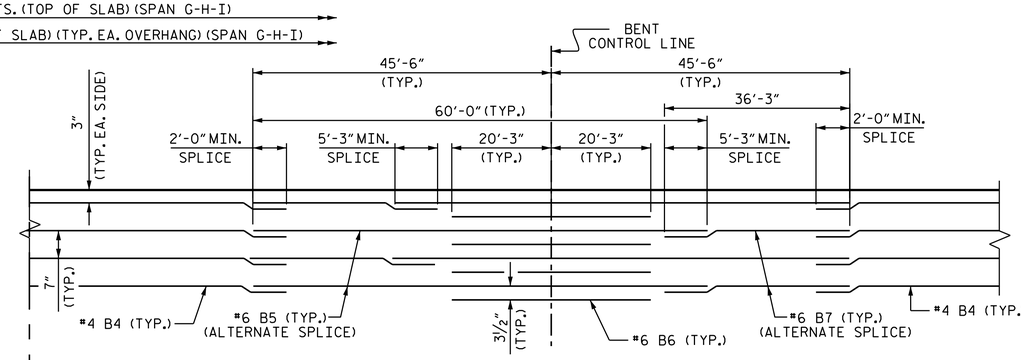


## DETAIL B
## AT BENT 2, 4, 7, & 10

## NOTES

FOR LOCATION OF INTERMEDIATE DIAPHRAGMS, SEE "GIRDER LAYOUT" SHEETS. FOR DETAILS, SEE "INTERMEDIATE STEEL DIAPHRAGMS FOR 74" MODIFIED BULB TEE PRESTRESSED CONCRETE GIRDERS" SHEET.

FOR PLACEMENT OF #4 J1 BAR, SEE "EXPANSION JOINT SEAL DETAILS" SHEETS.

PROJECT NO. R-1015
CRAVEN COUNTY
STATION: 177+67.00 -L-

SHEET 2 OF 6

STATE OF NORTH CAROLINA
DEPARTMENT OF TRANSPORTATION
RALEIGH

SUPERSTRUCTURE
PLAN OF SPANS
B, D, G & J
(LEFT LANE)

DocuSigned by: D794597C456A4F7...
12/7/2018

1998 2018
ALPHA & OMEGA GROUP
CIVIL | STRUCTURAL | WATER RESOURCES
4601 Lake Boone Trail Suite 3C Raleigh, NC 27607
Phone 919 981 0310 Fax 919 981 0451
www.aogroup.com Firm License No. C-1684
A&O PROJECT NO. 2015.042

REFERENCE NO. 5-14
DOCUMENT NOT CONSIDERED FINAL UNLESS ALL SIGNATURES COMPLETED

| REVISIONS | | | | | | SHEET NO. |
|---|---|---|---|---|---|---|
| NO. | BY: | DATE: | NO. | BY: | DATE: | S5-14 |
| 1 | | | 3 | | | TOTAL SHEETS |
| 2 | | | 4 | | | 46 |

STRUCTURE NO. 5

| | | | |
|---|---|---|---|
| DRAWN BY : | J. B. W. | DATE : | 6/21/2018 |
| CHECKED BY : | S. K. C. | DATE : | 7/5/18 |
| DESIGN ENGINEER OF RECORD: | T.L.B., PE | DATE : | 8/28/18 |

$$$$$$SYSTIME$$$$$
$$$$$$$$$$$$$$$$$$$$$$DGN$$$$$$$$$$$$$$$$$$$$$$$
$$$$USERNAME$$$$

DocuSign Envelope ID: 41B4F490-A702-4BD4-819D-3D05819DE79C

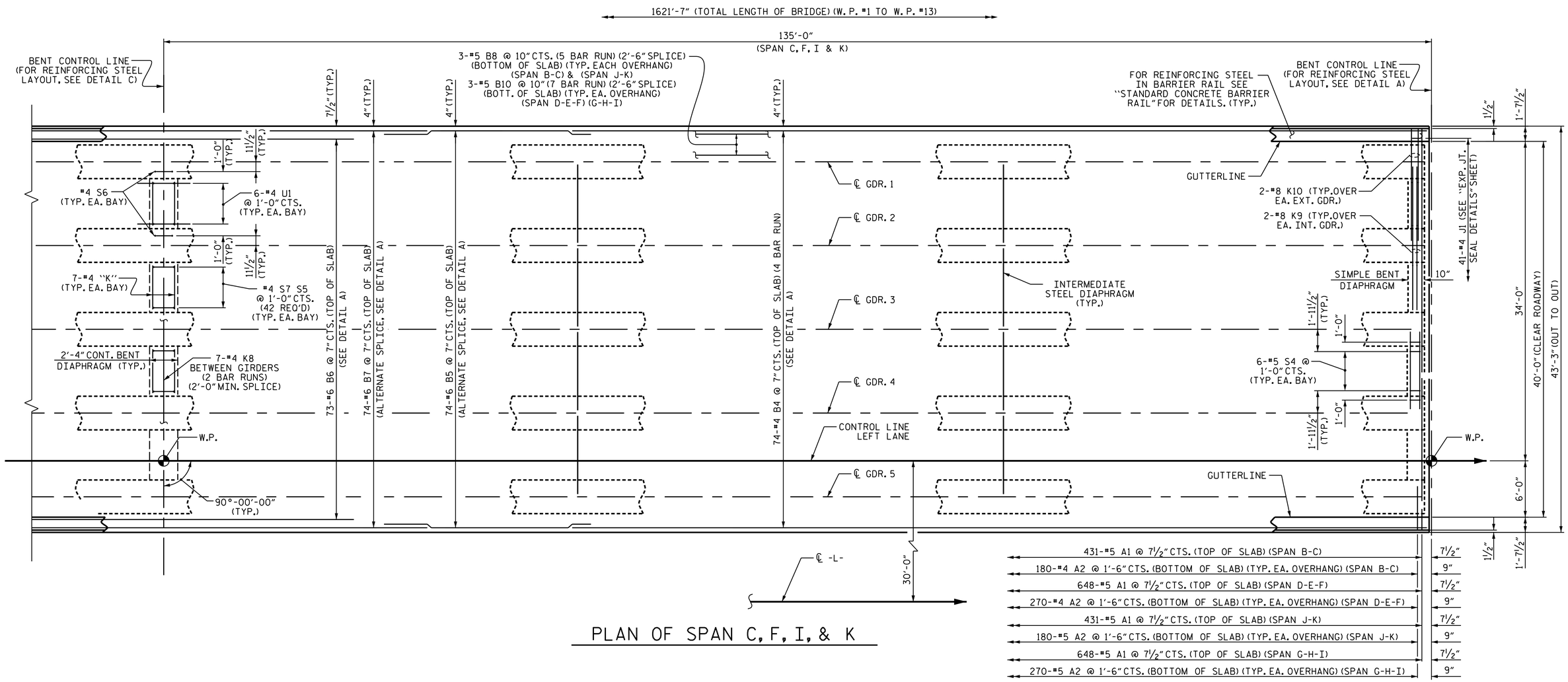


## PLAN OF SPAN C, F, I, & K

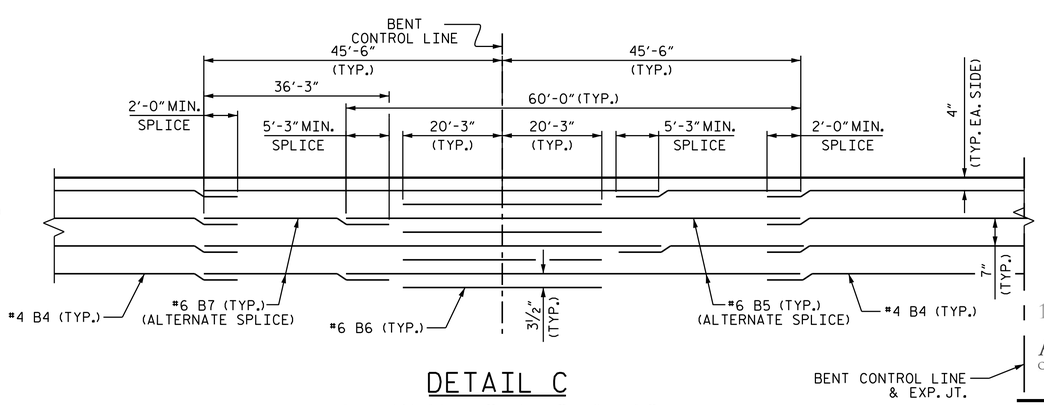


## DETAIL C
## AT BENT 2, 5, 8, & 10

## NOTES

FOR LOCATION OF INTERMEDIATE DIAPHRAGMS, SEE "GIRDER LAYOUT" SHEETS. FOR DETAILS, SEE "INTERMEDIATE STEEL DIAPHRAGMS FOR 74" MODIFIED BULB TEE PRESTRESSED CONCRETE GIRDERS" SHEET.

FOR PLACEMENT OF #4 J1 BAR, SEE "EXPANSION JOINT SEAL DETAILS" SHEETS.

PROJECT NO. R-1015
CRAVEN COUNTY
STATION: 177+67.00 -L-

SHEET 3 OF 6

STATE OF NORTH CAROLINA
DEPARTMENT OF TRANSPORTATION
RALEIGH

SUPERSTRUCTURE
PLAN OF SPANS
C, F, I, AND K
(LEFT LANE)

1998 2018
ALPHA & OMEGA GROUP
CIVIL | STRUCTURAL | WATER RESOURCES
4601 Lake Boone Trail Suite 3C Raleigh, NC 27607
Phone 919 981 0310 Fax 919 981 0451
www.aogroup.com Firm License No. C-1684
A&O PROJECT NO. 2015.042

DocuSigned by: D794597C456A4F7...
12/7/2018

REFERENCE NO. 5-15
DOCUMENT NOT CONSIDERED FINAL UNLESS ALL SIGNATURES COMPLETED

| REVISIONS | | | | | | SHEET NO. |
|---|---|---|---|---|---|---|
| NO. | BY: | DATE: | NO. | BY: | DATE: | S5-15 |
| 1 | | | 3 | | | TOTAL SHEETS |
| 2 | | | 4 | | | 46 |

STRUCTURE NO. 5

| | | | |
|---|---|---|---|
| DRAWN BY : | J. B. W. | DATE : | 6/21/2018 |
| CHECKED BY : | S. K. C. | DATE : | 7/5/18 |
| DESIGN ENGINEER OF RECORD: | T.L.B., PE | DATE : | 8/28/18 |

$$$$$$SYSTIME$$$$$
$$$$$$$$$$$$$$$$$$$$$$DGN$$$$$$$$$$$$$$$$$$$$$$$$
$$$$USERNAME$$$$

DocuSign Envelope ID: 41B4F490-A702-4BD4-819D-3D05819DE79C

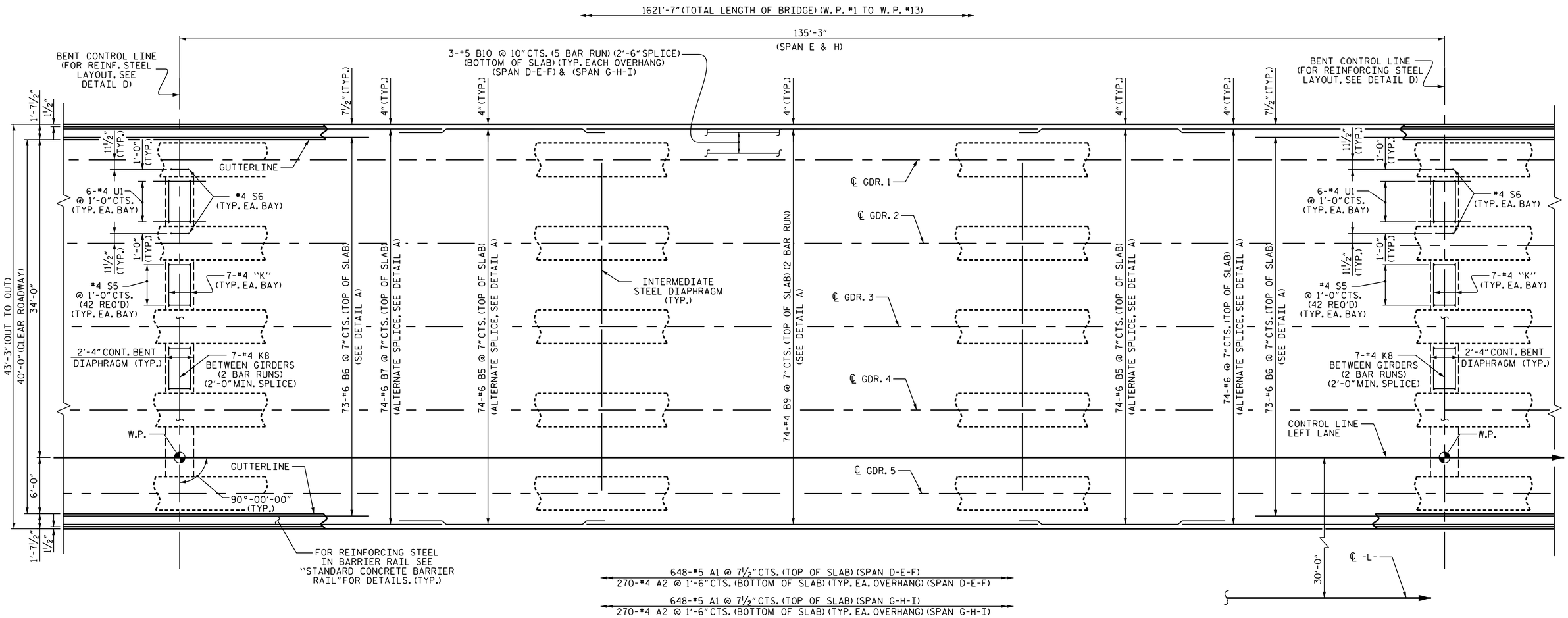


## PLAN OF SPAN E AND H

## NOTES

FOR LOCATION OF INTERMEDIATE DIAPHRAGMS, SEE "GIRDER LAYOUT" SHEETS. FOR DETAILS, SEE "INTERMEDIATE STEEL DIAPHRAGMS FOR 74" MODIFIED BULB TEE PRESTRESSED CONCRETE GIRDERS" SHEET.

FOR WORK POINT NUMBERS, SEE "GENERAL DRAWING" SHEETS.

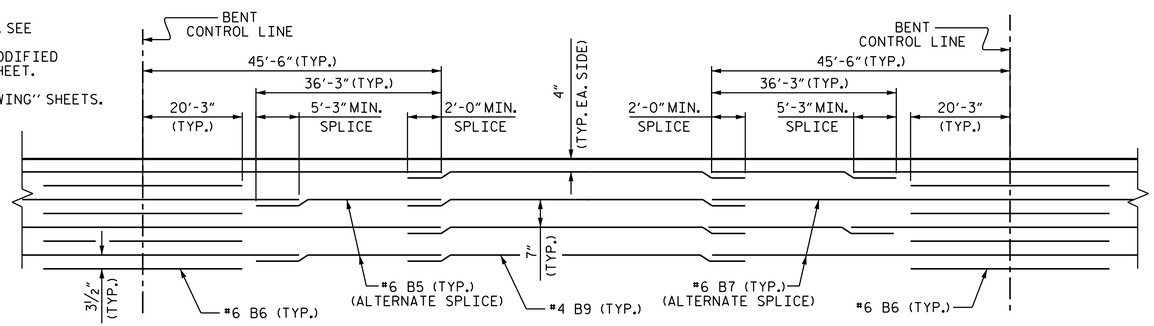


## DETAIL D

PROJECT NO. R-1015

CRAVEN COUNTY

STATION: 177+67.00 -L-

SHEET OF 4 OF 6

STATE OF NORTH CAROLINA
DEPARTMENT OF TRANSPORTATION
RALEIGH

SUPERSTRUCTURE
PLAN OF SPANS
E & H
(LEFT LANE)

DocuSigned by:
D794597C456A4F7...
12/7/2018

1998 20 2018
ALPHA & OMEGA GROUP
CIVIL | STRUCTURAL | WATER RESOURCES

4601 Lake Boone Trail Suite 3C Raleigh, NC 27607
Phone 919 981 0310 Fax 919 981 0451
www.aogroup.com Firm License No. C-1684
A&O PROJECT NO. 2015.042

REFERENCE NO. 5-16

DOCUMENT NOT CONSIDERED FINAL UNLESS ALL SIGNATURES COMPLETED

| REVISIONS | | | | | | |
|---|---|---|---|---|---|---|
| NO. | BY: | DATE: | NO. | BY: | DATE: | |
| 1 | | | 3 | | | |
| 2 | | | 4 | | | |

SHEET NO. S5-16

TOTAL SHEETS 46

STRUCTURE NO. 5

| | | | |
|---|---|---|---|
| DRAWN BY : | J. B. W. | DATE : | 6/21/2018 |
| CHECKED BY : | S. K. C. | DATE : | 7/5/18 |
| DESIGN ENGINEER OF RECORD: | T.L.B., PE | DATE : | 8/28/18 |

$$$$$$SYSTIME$$$$$
$$$$$$$$$$$$$$$$$$$$$$$$DGN$$$$$$$$$$$$$$$$$$$$$$$$
$$$$USERNAME$$$$

DocuSign Envelope ID: 41B4F490-A702-4BD4-819D-3D05819DE79C

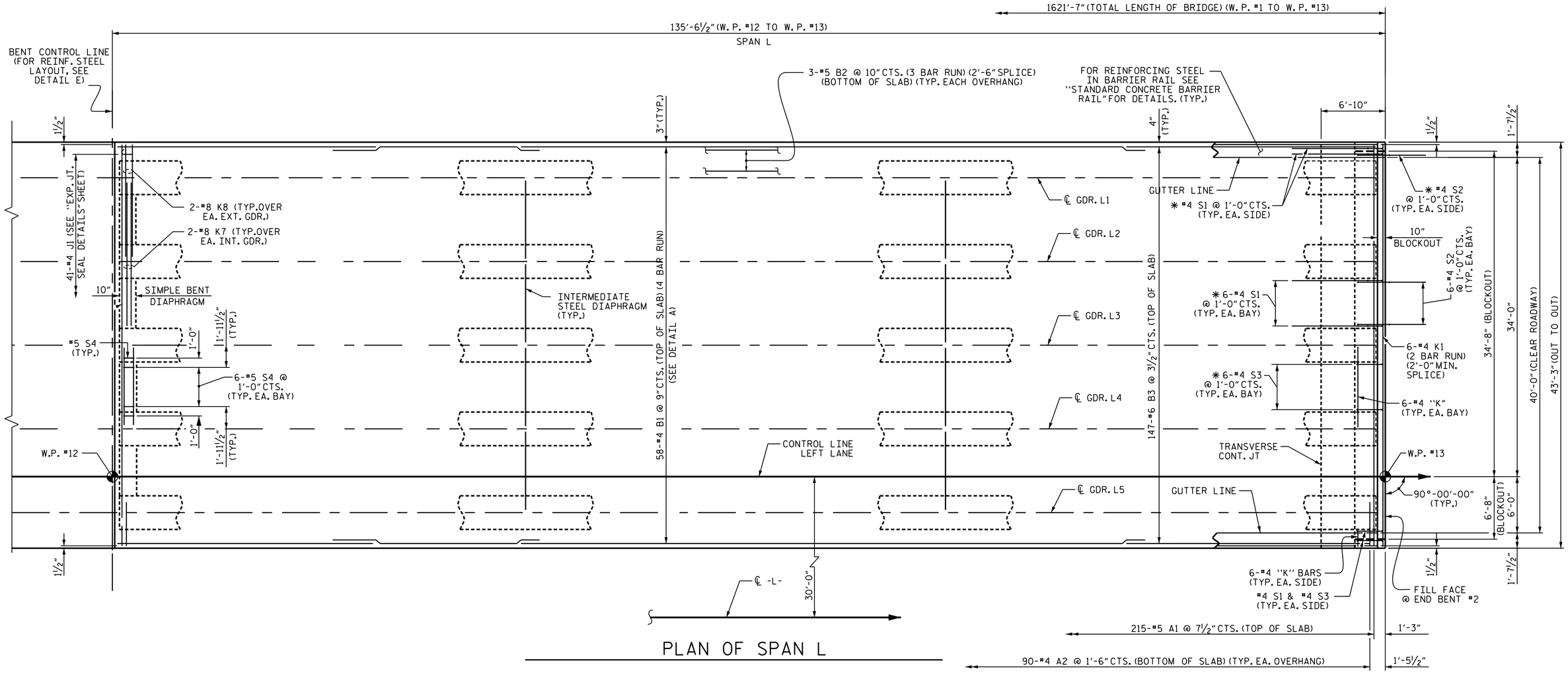


## PLAN OF SPAN L

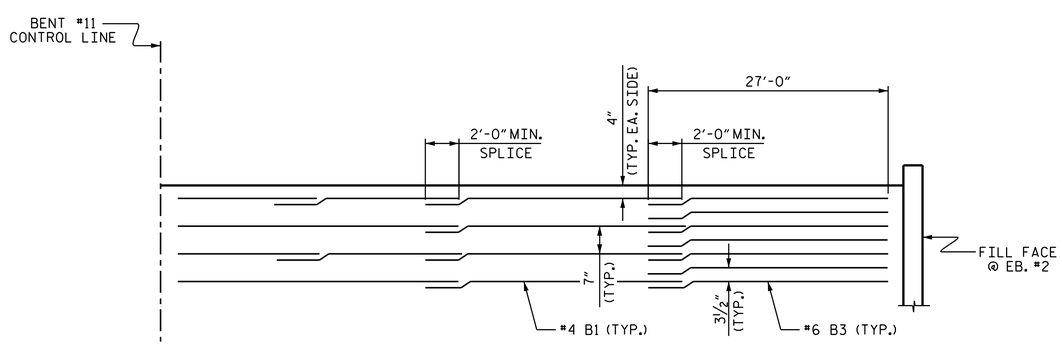


## DETAIL E
## "B" BARS DETAIL

## NOTES

FOR PLACEMENT OF #4 J1 BAR, SEE "EXPANSION JOINT SEAL DETAILS" SHEETS.

✱ #4 S1, #4 S2, & #4 S3 TO MATCH WITH #4 "D" BARS IN INTEGRAL END BENT CAP. FOR LOCATION OF INTERMEDIATE DIAPHRAGMS, SEE "GIRDER LAYOUT"

SEE SHEET S5-31 FOR TRANSVERSE CONSTRUCTION JT. DETAIL

PROJECT NO. R-1015

CRAVEN COUNTY

STATION: 177+67.00 -L-

SHEET 5 OF 6

STATE OF NORTH CAROLINA
DEPARTMENT OF TRANSPORTATION

SUPERSTRUCTURE
PLAN OF SPAN L
(LEFT LANE)

DRAWN BY : S. G. S. DATE : 6/18/18
CHECKED BY : S.K.C. DATE : 7/5/18
DESIGN ENGINEER OF RECORD: T.L.B., PE DATE : 8/28/18

1998 2018
ALPHA & OMEGA GROUP
CIVIL | STRUCTURAL | WATER RESOURCES

4601 Lake Boone Trail Suite 3C Raleigh, NC 27607
Phone 919 981 0310 Fax 919 981 0451
www.aogroup.com Firm License No. C-1684
A&O PROJECT NO. 2015.042

DocuSigned by:
D794597C456A4F7...
12/7/2018

REFERENCE NO. 5-17
DOCUMENT NOT CONSIDERED FINAL UNLESS ALL SIGNATURES COMPLETED

| REVISIONS | | | | | | | | |
|---|---|---|---|---|---|---|---|---|
| NO. | BY: | DATE: | NO. | BY: | DATE: | | | |
| 1 | | | 3 | | | | | |
| 2 | | | 4 | | | | | |

SHEET NO. S5-17
TOTAL SHEETS 46

$$$$$$SYSTIME$$$$$
$$$$$$$$$$$$$$$$$$$$$$$$DGN$$$$$$$$$$$$$$$$$$$$$$$$
$$$$USERNAME$$$$

DocuSign Envelope ID: 6709CF31-63FE-4D84-890B-820CC12D2928

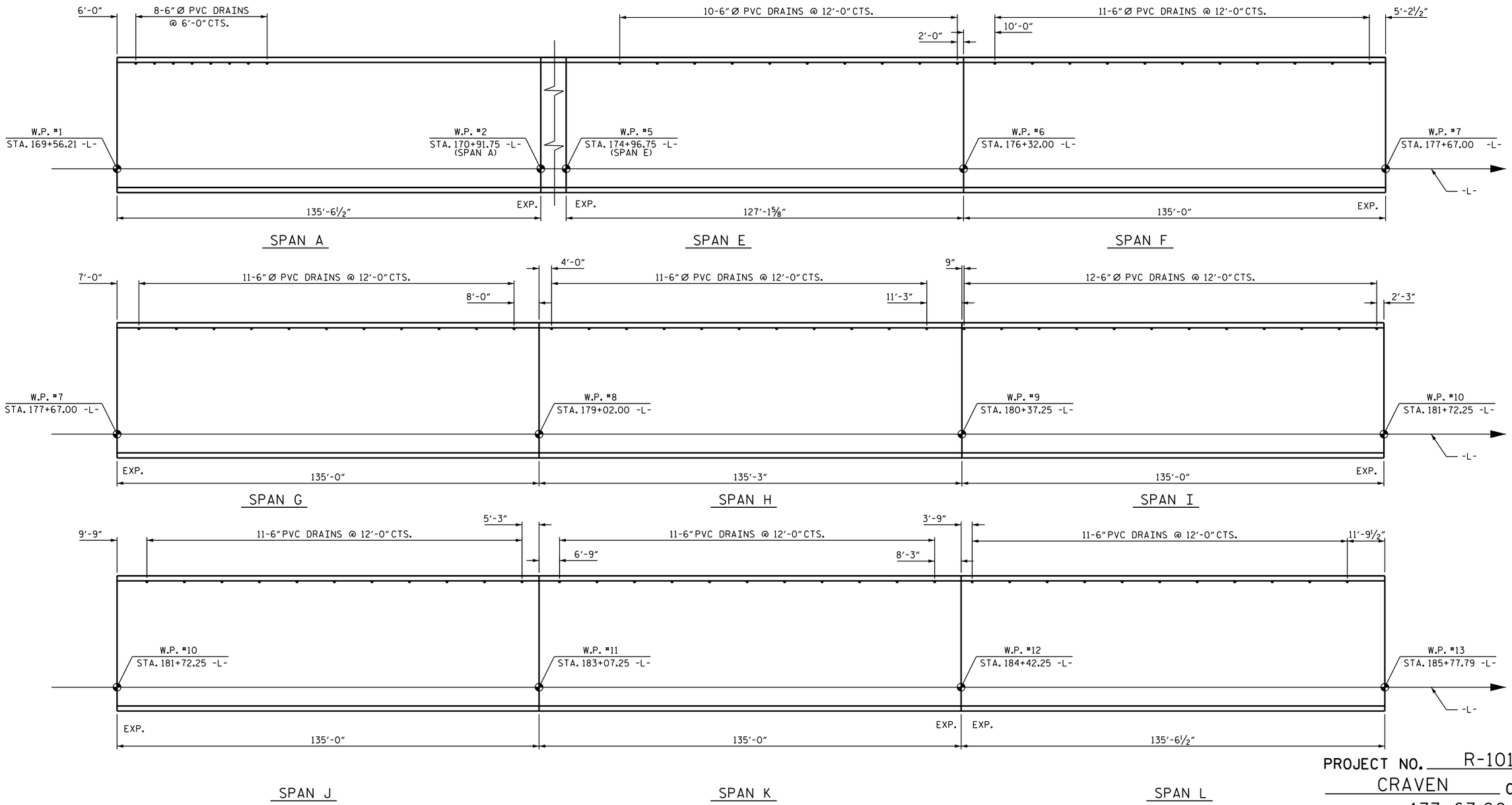


PROJECT NO. R-1015

CRAVEN COUNTY

STATION: 177+67.00 -L-

SHEET 6 OF 6

STATE OF NORTH CAROLINA
DEPARTMENT OF TRANSPORTATION
RALEIGH

# PLAN OF SPAN
# PIPE DRAIN LAYOUT

1998 2018
ALPHA & OMEGA GROUP
CIVIL | STRUCTURAL | WATER RESOURCES

4601 Lake Boone Trail Suite 3C Raleigh, NC 27607
Phone 919 981 0310 Fax 919 981 0451
www.aogroup.com Firm License No. C-1684

A&O PROJECT NO. 2015.042

DocuSigned by:
D794597C456A4F7...
11/9/2018 7:44:29 AM EST

REFERENCE NO. 5-18

DOCUMENT NOT CONSIDERED FINAL UNLESS ALL SIGNATURES COMPLETED

| REVISIONS | | | | | | SHEET NO. |
|---|---|---|---|---|---|---|
| NO. | BY: | DATE: | NO. | BY: | DATE: | S5-18 |
| 1 | | | 3 | | | TOTAL SHEETS |
| 2 | | | 4 | | | 46 |

STRUCTURE NO: 5

DRAWN BY : J. B. W. DATE : 8/27/2018
CHECKED BY : S. K. C. DATE : 8/27/2018
DESIGN ENGINEER OF RECORD: T. L. B., PE DATE : 9/28/2018

$$$$$$SYSTIME$$$$$
$$$$$$$$$$$$$$$$$$$$$$DGN$$$$$$$$$$$$$$$$$$$$$$$$
$$$$USERNAME$$$$

DocuSign Envelope ID: 6709CF31-63FE-4D84-890B-820CC12D2928

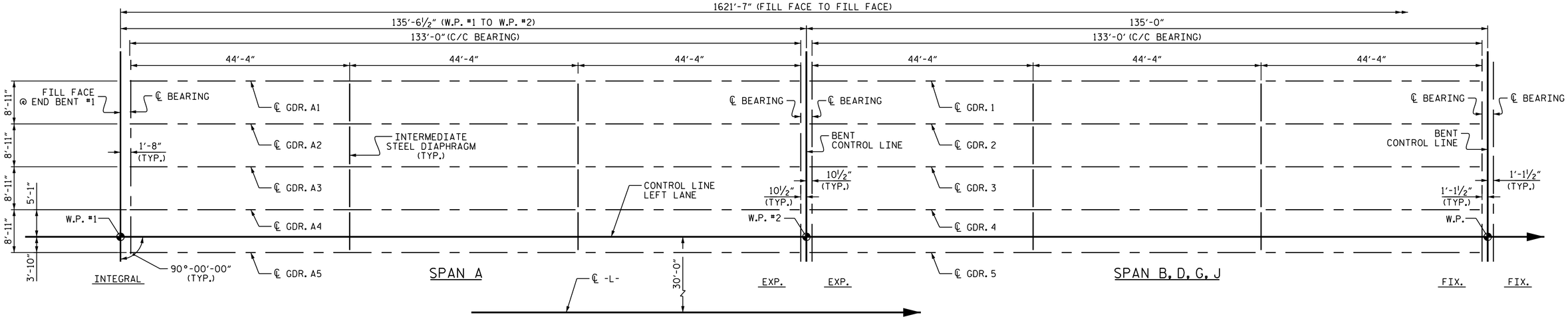


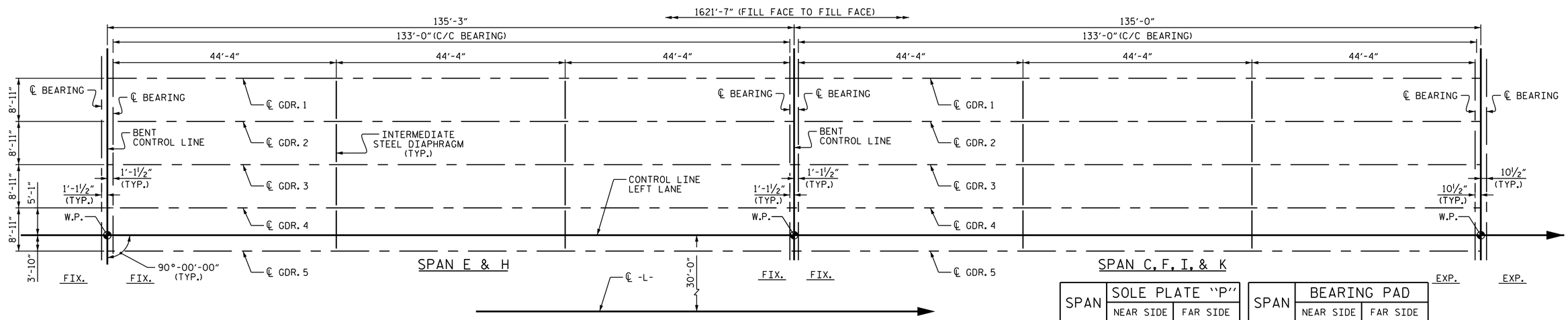


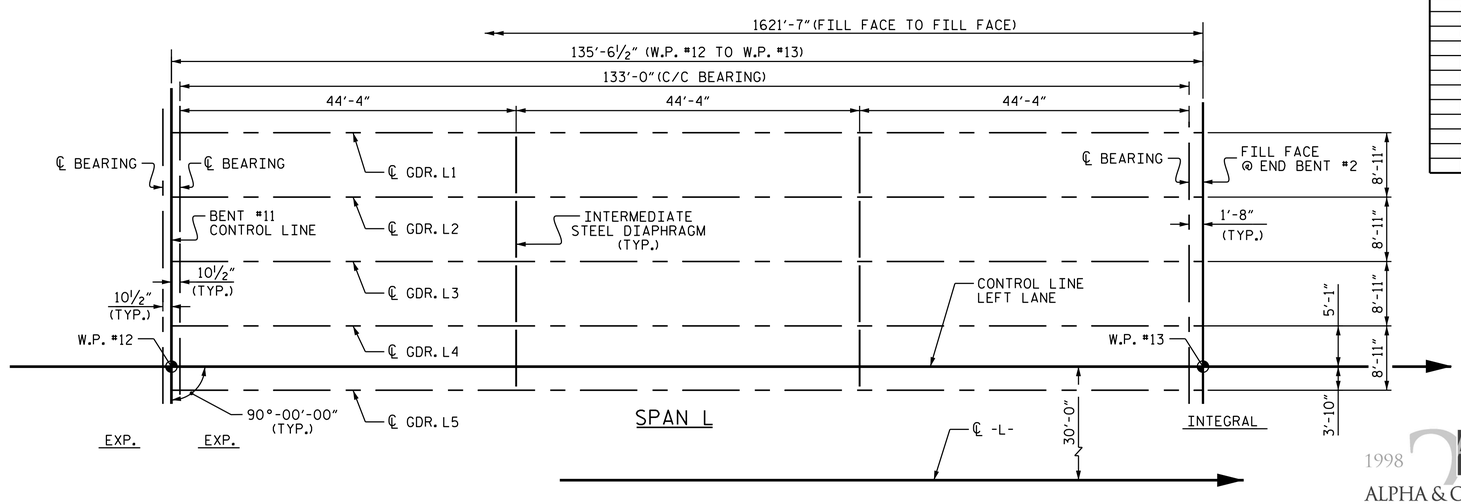


GIRDER LAYOUT

| SPAN | SOLE PLATE "P" | |
|---|---|---|
| | NEAR SIDE | FAR SIDE |
| A | | P1 |
| B | P1 | P2 |
| C | P2 | P1 |
| D | P1 | P2 |
| E | P2 | P2 |
| F | P2 | P1 |
| G | P1 | P2 |
| H | P2 | P2 |
| I | P2 | P1 |
| J | P1 | P2 |
| K | P2 | P1 |
| L | P1 | |

| SPAN | BEARING PAD | |
|---|---|---|
| | NEAR SIDE | FAR SIDE |
| A | IV | VII |
| B | VII | VII |
| C | VII | VII |
| D | VII | VII |
| E | VII | VII |
| F | VII | VII |
| G | VII | VII |
| H | VII | VII |
| I | VII | VII |
| J | VII | VII |
| K | VII | VII |
| L | VII | IV |

PROJECT NO. R-1015

CRAVEN COUNTY

STATION: 177+67.00 -L-

SHEET 1 OF 1

STATE OF NORTH CAROLINA
DEPARTMENT OF TRANSPORTATION
RALEIGH

# SUPERSTRUCTURE GIRDER LAYOUT

(LEFT LANE)

DocuSigned by:
D794597C456A4F7...
11/9/2018 7:44:29 AM EST

1998 2018
ALPHA & OMEGA GROUP
CIVIL | STRUCTURAL | WATER RESOURCES

4601 Lake Boone Trail Suite 3C Raleigh, NC 27607
Phone 919 981 0310 Fax 919 981 0451
www.aogroup.com Firm License No. C-1684

A&O PROJECT NO. 2015.042

REFERENCE NO. 5-19

DOCUMENT NOT CONSIDERED FINAL UNLESS ALL SIGNATURES COMPLETED

| REVISIONS | | | | | | |
|---|---|---|---|---|---|---|
| NO. | BY: | DATE: | NO. | BY: | DATE: | |
| 1 | | | 3 | | | |
| 2 | | | 4 | | | |

SHEET NO. S5-19

TOTAL SHEETS 46

STRUCTURE NO. 5

DRAWN BY : J. B. W. DATE : 6/21/2018
CHECKED BY : S. K. C. DATE : 6/22/2018
DESIGN ENGINEER OF RECORD: T.L.B., PE DATE : 06/28/18

$$$$$$SYSTIME$$$$$
$$$$$$$$$$$$$$$$$$$$$$$$DGN$$$$$$$$$$$$$$$$$$$$$$$$
$$$$USERNAME$$$$