This electronic collection of documents is provided for the convenience of the user and is Not a Certified Document –

The documents contained herein were originally issued and sealed by the individuals whose names and license numbers appear on each page, on the dates appearing with their signature on that page.
This file or an individual page shall not be considered a certified document.

TIP PROJECT: R-3825B

CONTRACT: C204108

STATE OF NORTH CAROLINA
DIVISION OF HIGHWAYS

JOHNSTON COUNTY

STATE	STATE PROJECT REFERENCE NO.	SHEET NO.	TOTAL SHEETS
N.C.	R-3825B		

STATE PROJ. NO.	F.A. PROJ. NO.	DESCRIPTION
34552.1.FR3	STP-0042(58)	P.E.
34552.2.4	STP-0042(58)	R/W
34552.2.5	STP-0042(58)	UTL.
34552.3.5	–	CONST.

LOCATION: NC 42 FROM SR 1902 (GLEN LAUREL RD) TO SR 1003 (BUFFALO RD)

TYPE OF WORK: GRADING, PAVING, STRUCTURES, DRAINAGE AND SIGNALS

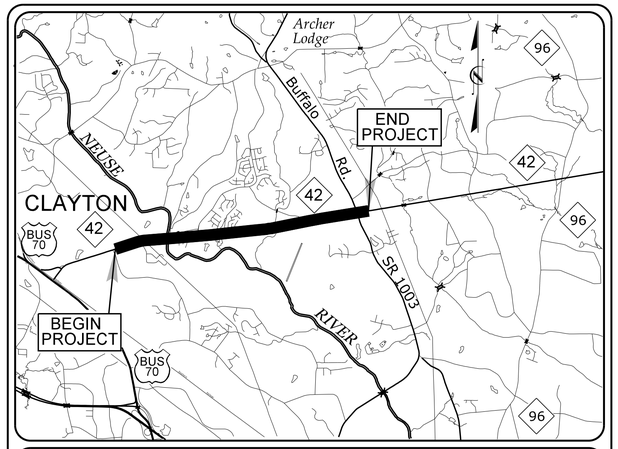

VICINITY MAP
NOT TO SCALE

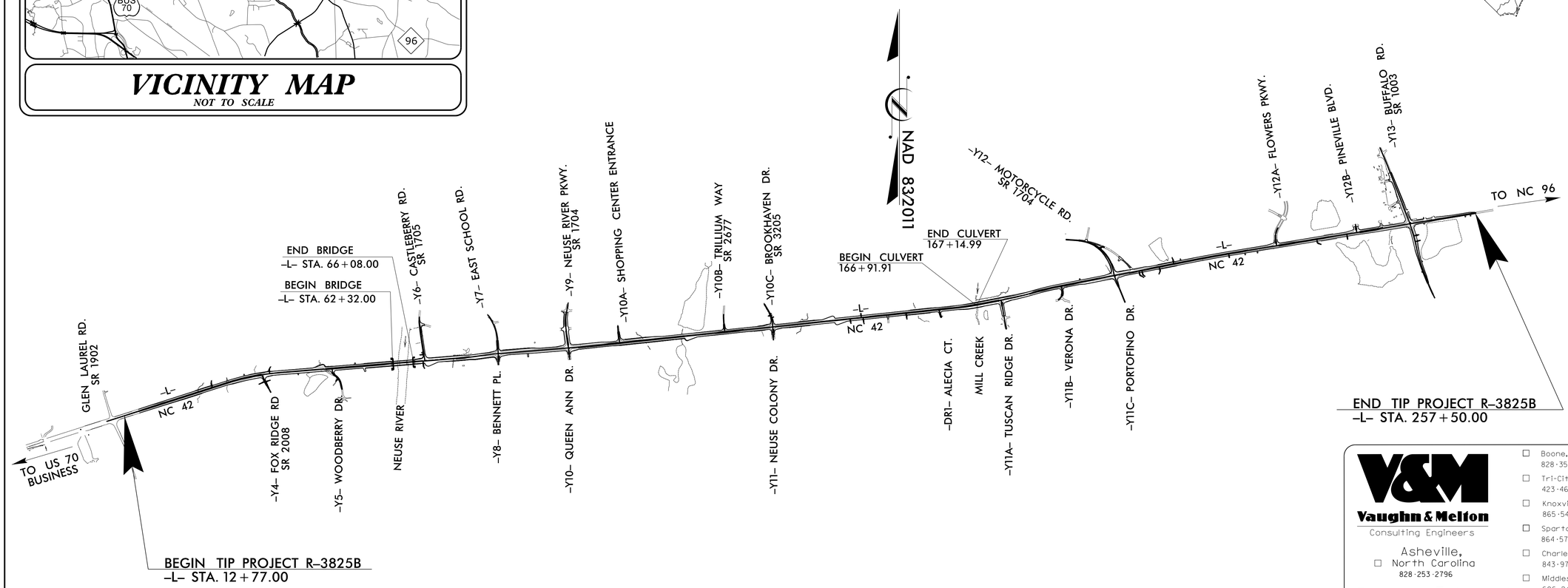

STRUCTURE

V&M
Vaughn & Melton
Consulting Engineers
Asheville, North Carolina 828·253·2796
Raleigh, NC 919·977·9455
Charlotte, NC 704·357·0488
Boone, NC 828·355·9933
Tri-Cities, TN 423·467·8401
Knoxville, TN 865·546·5800
Spartanburg, SC 864·574·4775
Charleston, SC 843·974·5650
Middlesboro, KY 606·248·6600
Atlanta, GA 770·627·3509

Copyright © 2006 Vaughn & Melton, Inc. All Rights Reserved

DESIGN DATA

ADT 2015 = 21,200
ADT 2040 = 37,400
K = 9%
D = 65%
T = 6% *
V = 60 MPH
* (TTST 4% + DUAL 1%)
FUNC. CLASS = RURAL MAJOR COLLECTOR REGIONAL TIER

PROJECT LENGTH

LENGTH ROADWAY TIP PROJECT R-3825B = 4.559 MILES
LENGTH STRUCTURE TIP PROJECT R-3825B = 0.076 MILES
TOTAL LENGTH OF TIP PROJECT R-3825B = 4.635 MILES

Prepared in the Office of:
VAUGHN & MELTON
3509 Haworth Drive
Raleigh, NC 27609
For the North Carolina Division of Highways

2018 STANDARD SPECIFICATIONS

LETTING DATE: SEPTEMBER 18, 2018

HARDY WILLIS, P.E.
PROJECT ENGINEER

ALBERT OUTLAW, P.E.
PROJECT DESIGN ENGINEER

NORTH CAROLINA PROFESSIONAL SEAL 20777 ENGINEER HARDY L. WILLIS

DOCUMENT NOT CONSIDERED FINAL UNLESS ALL SIGNATURES COMPLETED

STATE OF NORTH CAROLINA DEPARTMENT OF TRANSPORTATION

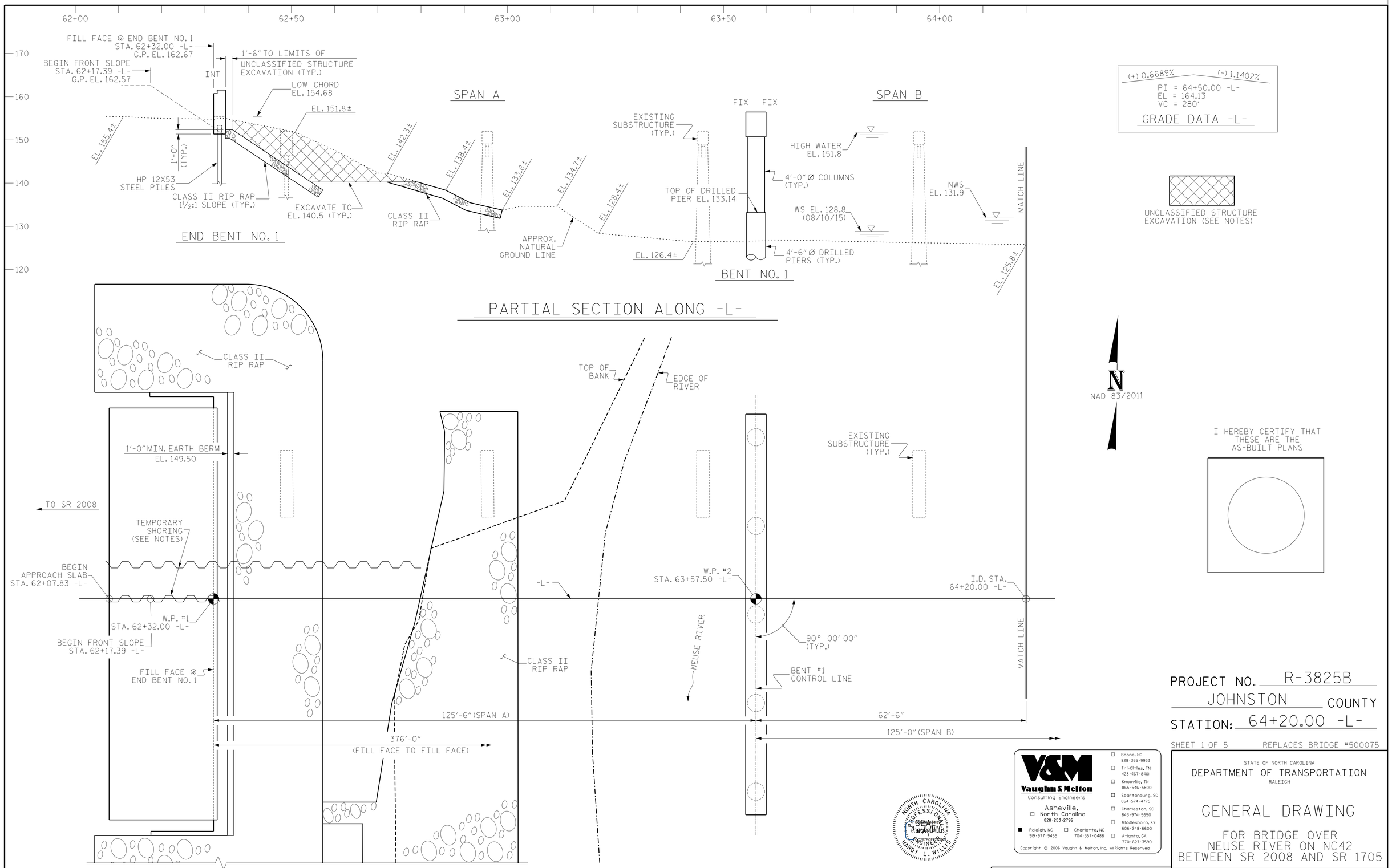

I HEREBY CERTIFY THAT THESE ARE THE AS-BUILT PLANS

PROJECT NO. R-3825B

JOHNSTON COUNTY

STATION: 64+20.00 -L-

SHEET 1 OF 5 REPLACES BRIDGE #500075

STATE OF NORTH CAROLINA
DEPARTMENT OF TRANSPORTATION
RALEIGH

GENERAL DRAWING

FOR BRIDGE OVER
NEUSE RIVER ON NC42
BETWEEN SR 2008 AND SR 1705

Vaughn & Melton
Consulting Engineers
Asheville, North Carolina
828-253-2796
Raleigh, NC 919-977-9455
Charlotte, NC 704-357-0488
Boone, NC 828-355-9933
Tri-Cities, TN 423-467-8401
Knoxville, TN 865-546-5800
Spartanburg, SC 864-574-4775
Charleston, SC 843-974-5650
Middlesboro, KY 606-248-6600
Atlanta, GA 770-627-3590

Copyright © 2006 Vaughn & Melton, Inc. All Rights Reserved

NORTH CAROLINA PROFESSIONAL ENGINEER SEAL 024844 HARDY L. WILLIS

7/17/2018 9:03:43 AM EDT

DOCUMENT NOT CONSIDERED FINAL UNLESS ALL SIGNATURES COMPLETED

DWN. BY: WDC	DATE: 4/2017	REVISIONS	SHEET NO. S-1
CHKD. BY: ACO	DATE: 12/2017	NO. BY: DATE: NO. BY: DATE:	TOTAL SHEETS 59
DES. EGR. OF RECORD: ACO	DATE: 12/2017	1 3 2 4	

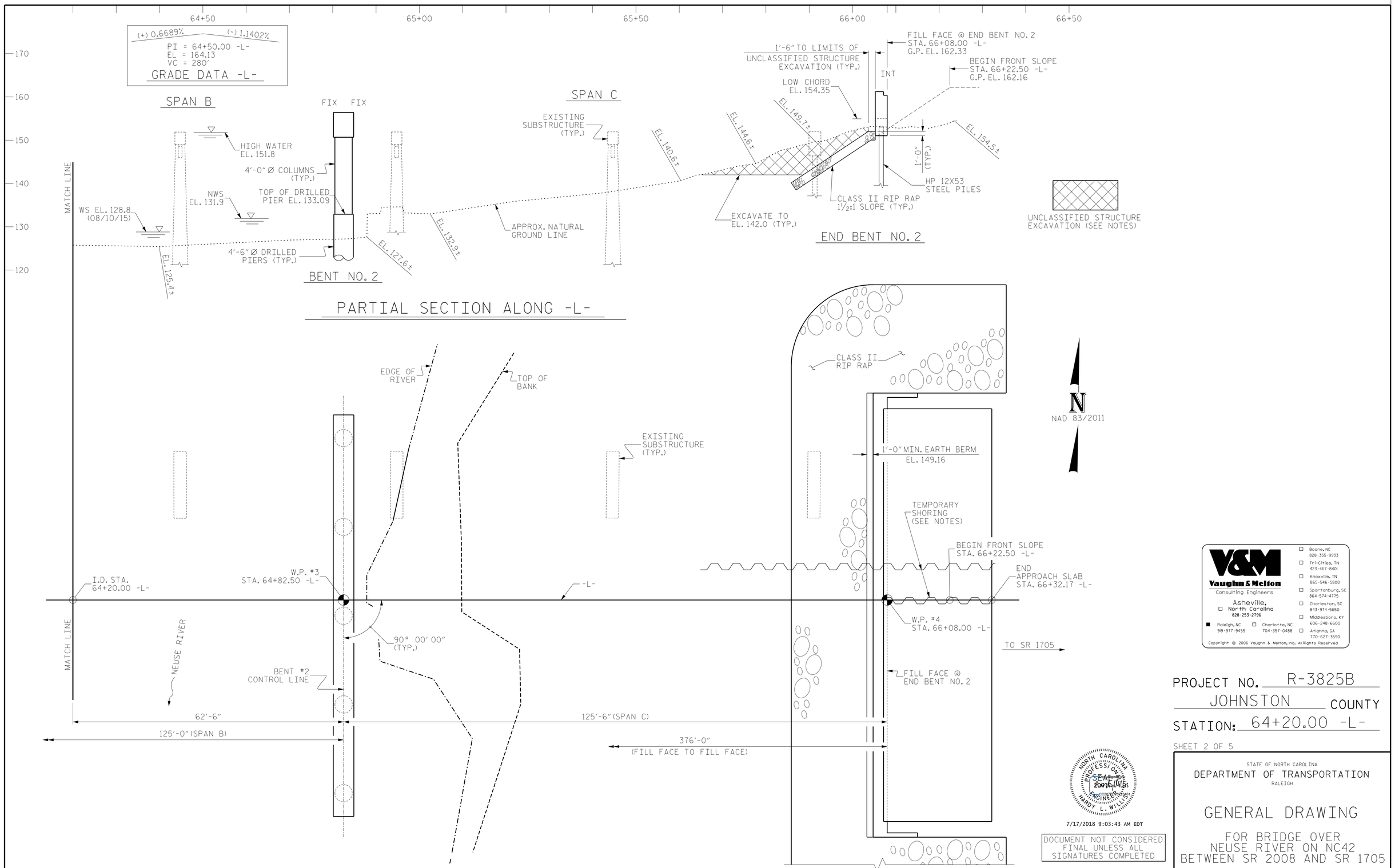
64+50
65+00
65+50
66+00
66+50
(+) 0.6689%
(-) 1.1402%
PI = 64+50.00 -L-
EL = 164.13
VC = 280'
GRADE DATA -L-
170
160
150
140
130
120
MATCH LINE
SPAN B
FIX FIX
HIGH WATER
EL. 151.8
4'-0" Ø COLUMNS
(TYP.)
NWS
EL. 131.9
TOP OF DRILLED
PIER EL. 133.09
WS EL. 128.8
(08/10/15)
4'-6" Ø DRILLED
PIERS (TYP.)
EL. 125.4±
EL. 127.6±
BENT NO. 2
EL. 132.9±
APPROX. NATURAL
GROUND LINE
SPAN C
EXISTING
SUBSTRUCTURE
(TYP.)
EL. 140.6±
EL. 144.6±
EL. 149.7±
1'-6" TO LIMITS OF
UNCLASSIFIED STRUCTURE
EXCAVATION (TYP.)
LOW CHORD
EL. 154.35
INT
FILL FACE @ END BENT NO. 2
STA. 66+08.00 -L-
G.P. EL. 162.33
BEGIN FRONT SLOPE
STA. 66+22.50 -L-
G.P. EL. 162.16
EL. 154.5±
1'-0"
(TYP.)
HP 12X53
STEEL PILES
CLASS II RIP RAP
1½:1 SLOPE (TYP.)
EXCAVATE TO
EL. 142.0 (TYP.)
END BENT NO. 2
UNCLASSIFIED STRUCTURE
EXCAVATION (SEE NOTES)
PARTIAL SECTION ALONG -L-
EDGE OF
RIVER
TOP OF
BANK
EXISTING
SUBSTRUCTURE
(TYP.)
CLASS II
RIP RAP
N
NAD 83/2011
1'-0" MIN. EARTH BERM
EL. 149.16
TEMPORARY
SHORING
(SEE NOTES)
BEGIN FRONT SLOPE
STA. 66+22.50 -L-
END
APPROACH SLAB
STA. 66+32.17 -L-
I.D. STA.
64+20.00 -L-
W.P. #3
STA. 64+82.50 -L-
-L-
W.P. #4
STA. 66+08.00 -L-
MATCH LINE
NEUSE RIVER
90° 00' 00"
(TYP.)
TO SR 1705
BENT #2
CONTROL LINE
FILL FACE @
END BENT NO. 2
62'-6"
125'-6" (SPAN C)
125'-0" (SPAN B)
376'-0"
(FILL FACE TO FILL FACE)
SEE RIP RAP SHEET
FOR FULL VIEW OF
RIP RAP...
PARTIAL PLAN ALONG -L-
(PILES NOT SHOWN IN PLAN VIEW FOR CLARITY)
V&M
Vaughn & Melton
Consulting Engineers
Asheville, North Carolina
828-253-2796
Raleigh, NC 919-977-9455
Charlotte, NC 704-357-0488
Boone, NC 828-355-9933
Tri-Cities, TN 423-467-8401
Knoxville, TN 865-546-5800
Spartanburg, SC 864-574-4775
Charleston, SC 843-974-5650
Middlesboro, KY 606-248-6600
Atlanta, GA 770-627-3590
Copyright © 2006 Vaughn & Melton, Inc. All Rights Reserved
PROJECT NO. R-3825B
JOHNSTON COUNTY
STATION: 64+20.00 -L-
SHEET 2 OF 5
NORTH CAROLINA PROFESSIONAL SEAL ENGINEER HARDY L. WILLIS
7/17/2018 9:03:43 AM EDT
DOCUMENT NOT CONSIDERED FINAL UNLESS ALL SIGNATURES COMPLETED
STATE OF NORTH CAROLINA
DEPARTMENT OF TRANSPORTATION
RALEIGH
GENERAL DRAWING
FOR BRIDGE OVER
NEUSE RIVER ON NC42
BETWEEN SR 2008 AND SR 1705
DWN. BY: WDC DATE: 4/2017
CHKD. BY: ACO DATE: 12/2017
DES. EGR. OF RECORD: ACO DATE: 12/2017
REVISIONS
NO. BY: DATE: NO. BY: DATE:
1
2
3
4
SHEET NO. S-2
TOTAL SHEETS 59

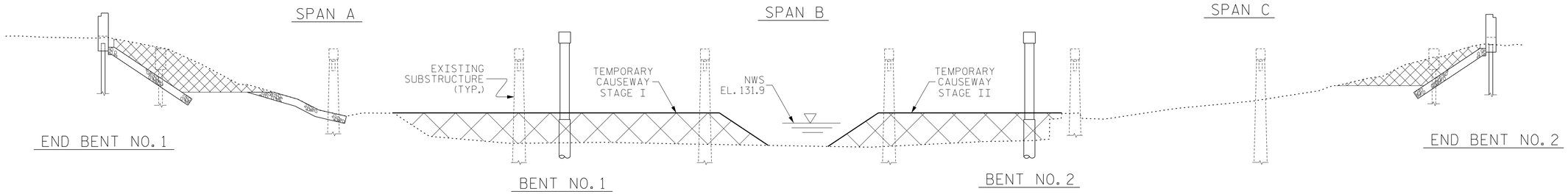

SECTION ALONG -L-

NOTE:
NO MORE THAN 50% OF THE FLOW AREA WILL BE BLOCKED BY THE CAUSEWAY AT ANY GIVEN TIME.

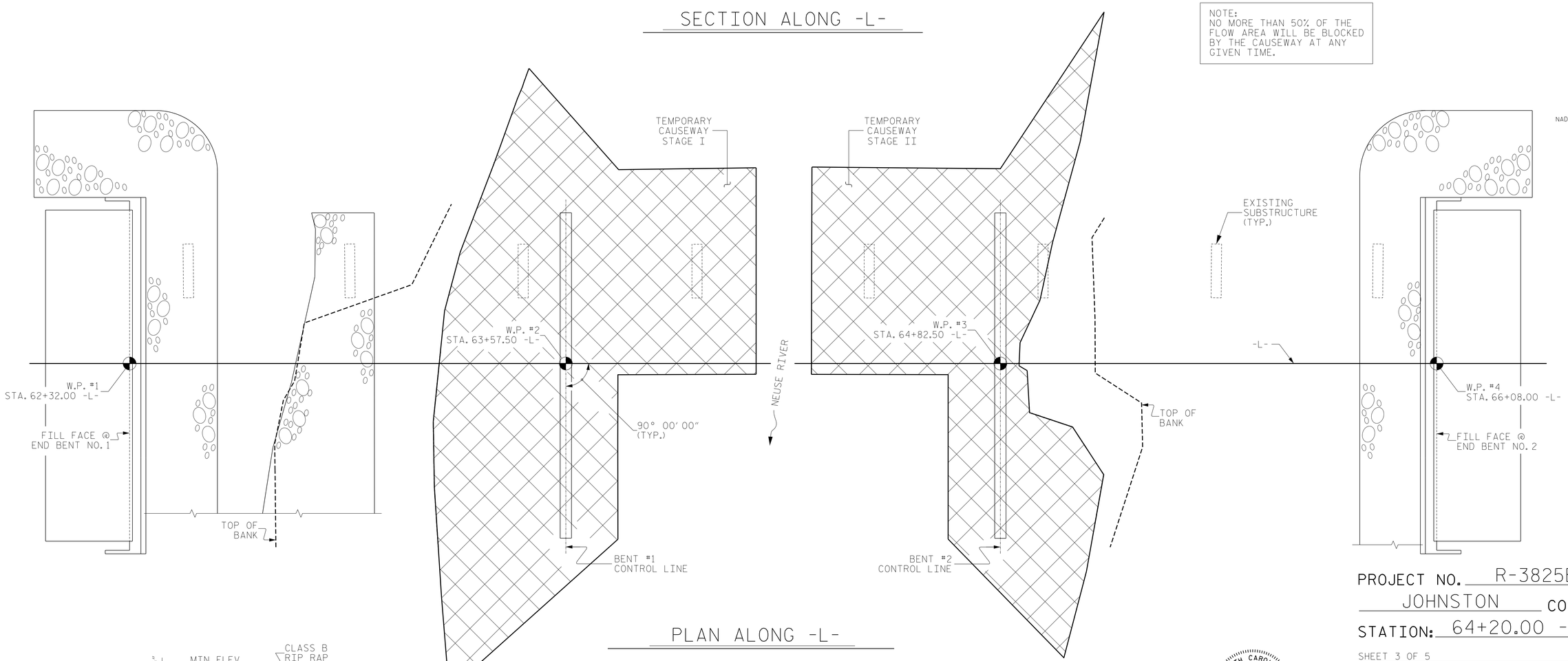

PLAN ALONG -L-

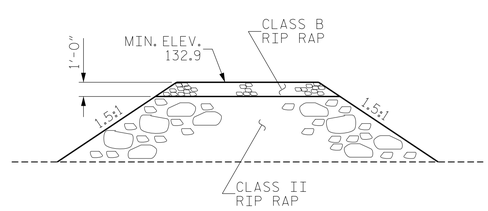

SECTION THRU CAUSEWAY

PROJECT NO. R-3825B

JOHNSTON COUNTY

STATION: 64+20.00 -L-

SHEET 3 OF 5

NORTH CAROLINA PROFESSIONAL SEAL ENGINEER HARDY L. WILLIS

7/17/2018 9:03:43 AM EDT

DOCUMENT NOT CONSIDERED FINAL UNLESS ALL SIGNATURES COMPLETED

V&M
Vaughn & Melton
Consulting Engineers
Asheville, North Carolina
828-253-2796
Raleigh, NC 919-977-9455
Charlotte, NC 704-357-0488
Boone, NC 828-355-9933
Tri-Cities, TN 423-467-8401
Knoxville, TN 865-546-5800
Spartanburg, SC 864-574-4775
Charleston, SC 843-974-5650
Middlesboro, KY 606-248-6600
Atlanta, GA 770-627-3590

Copyright © 2006 Vaughn & Melton, Inc. All Rights Reserved

STATE OF NORTH CAROLINA
DEPARTMENT OF TRANSPORTATION
RALEIGH

GENERAL DRAWING TEMPORARY CAUSEWAY

FOR BRIDGE OVER NEUSE RIVER ON NC42 BETWEEN SR 2008 AND SR 1705

DWN. BY: WDC DATE: 4/2017
CHKD. BY: ACO DATE: 12/2017
DES. EGR. OF RECORD: ACO DATE: 12/2017

REVISIONS						
NO.	BY:	DATE:	NO.	BY:	DATE:	
1			3			
2			4			

SHEET NO. S-3

TOTAL SHEETS 59

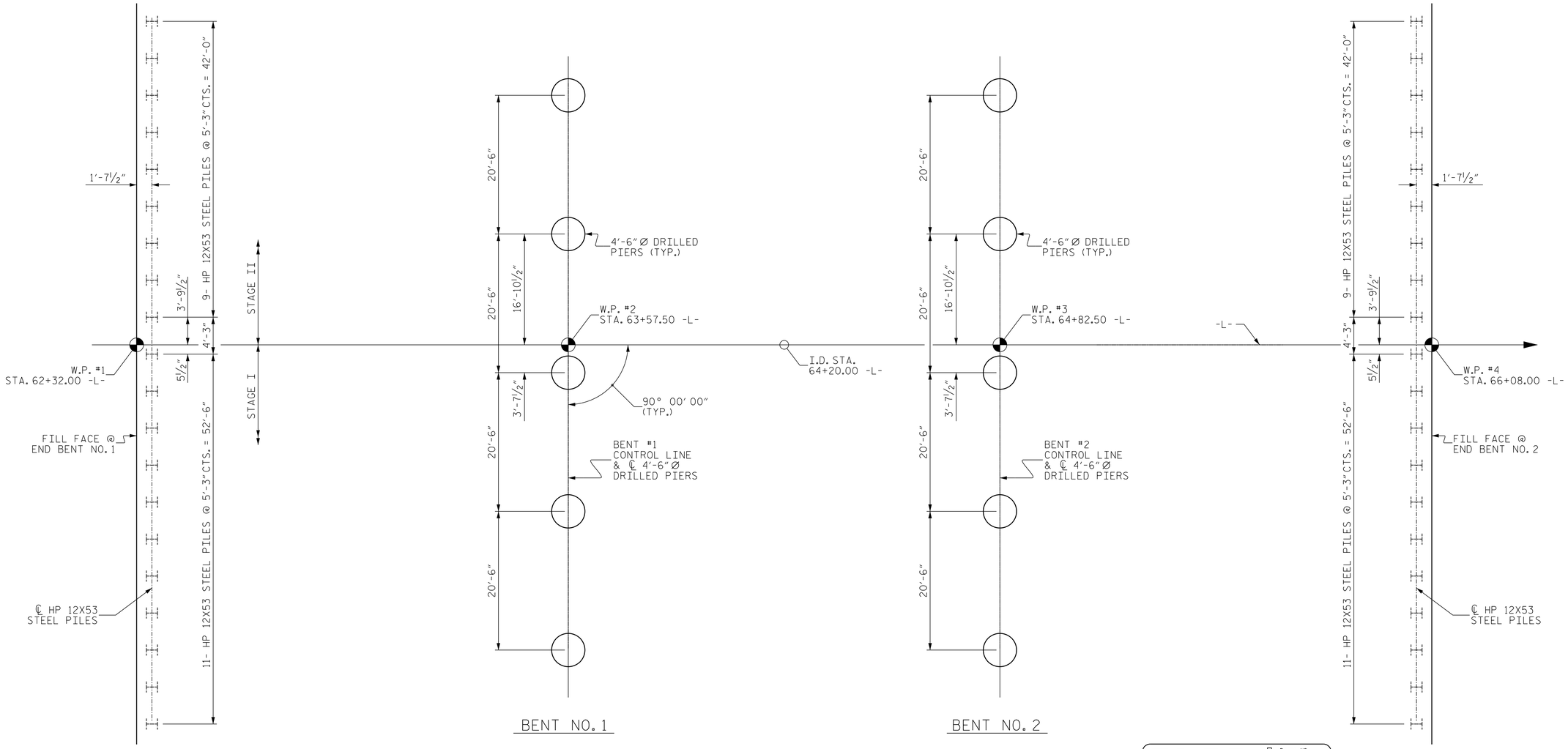

FOUNDATION LAYOUT

(DIMENSIONS LOCATING PILES AND DRILLED PIERS ARE SHOWN TO THE CENTERLINE OF PILES AND DRILLED PIERS)

V&M
Vaughn & Melton
Consulting Engineers
Asheville, North Carolina
828-253-2796
Raleigh, NC 919-977-9455
Charlotte, NC 704-357-0488
Boone, NC 828-355-9933
Tri-Cities, TN 423-467-8401
Knoxville, TN 865-546-5800
Spartanburg, SC 864-574-4775
Charleston, SC 843-974-5650
Middlesboro, KY 606-248-6600
Atlanta, GA 770-627-3590

Copyright © 2006 Vaughn & Melton, Inc. All Rights Reserved

NORTH CAROLINA PROFESSIONAL ENGINEER SEAL 019681 HARDY L. WILLIS
SEAL
019681
7/17/2018 9:03:43 AM EDT

DOCUMENT NOT CONSIDERED FINAL UNLESS ALL SIGNATURES COMPLETED

PROJECT NO. R-3825B
JOHNSTON COUNTY
STATION: 64+20.00 -L-

SHEET 4 OF 5

FOUNDATION NOTES

FOR PILES, SEE SECTION 450 OF THE STANDARD SPECIFICATIONS.

PILES AT END BENT NO. 1 ARE DESIGNED FOR A FACTORED RESISTANCE OF 120 TONS PER PILE.

DRIVE PILES AT END BENT NO. 1 TO A REQUIRED DRIVING RESISTANCE OF 400 TONS PER PILE.

FOR DRILLED PIERS, SEE SECTION 411 OF THE STANDARD SPECIFICATIONS.

DRILLED PIERS AT BENT NO. 1 ARE DESIGNED FOR A FACTORED RESISTANCE OF 910 TONS PER PIER. CHECK FIELD CONDITIONS FOR THE REQUIRED TIP RESISTANCE OF 75 TSF.

PERMANENT STEEL CASINGS ARE REQUIRED FOR DRILLED PIERS AT BENT NO. 1. DO NOT EXTEND PERMANENT CASINGS BELOW ELEVATION 122.4 FT (LT), 121.0 FT (CR), AND 117.0 FT (RT) WITHOUT PRIOR APPROVAL FROM THE ENGINEER.

INSTALL DRILLED PIERS AT BENT NO. 1 TO A TIP ELEVATION NO HIGHER THAN 108.0 FT WITH THE REQUIRED TIP RESISTANCE.

THE SCOUR CRITICAL ELEVATION FOR BENT NO. 1 IS ELEVATION 122.0 FT (LT), 120.0 FT (CR), AND 116.0 FT (RT). SCOUR CRITICAL ELEVATIONS ARE USED TO MONITOR POSSIBLE SCOUR PROBLEMS DURING THE LIFE OF THE STRUCTURE.

DRILLED PIERS AT BENT NO. 2 ARE DESIGNED FOR A FACTORED RESISTANCE OF 911 TONS PER PIER. CHECK FIELD CONDITIONS FOR THE REQUIRED TIP RESISTANCE OF 75 TSF.

PERMANENT STEEL CASINGS ARE REQUIRED FOR DRILLED PIERS AT BENT NO. 2. DO NOT EXTEND PERMANENT CASINGS BELOW ELEVATION 123.0 FT (LT), 123.0 FT (CR), AND 116.0 FT (RT) WITHOUT PRIOR APPROVAL FROM THE ENGINEER.

INSTALL DRILLED PIERS AT BENT NO. 2 TO A TIP ELEVATION NO HIGHER THAN 108.0 FT WITH THE REQUIRED TIP RESISTANCE.

THE SCOUR CRITICAL ELEVATION FOR BENT NO. 2 IS ELEVATION 122.0 FT (LT), 122.0 FT (CR), AND 115.0 FT (RT). SCOUR CRITICAL ELEVATIONS ARE USED TO MONITOR POSSIBLE SCOUR PROBLEMS DURING THE LIFE OF THE STRUCTURE.

PILES AT END BENT NO. 2 ARE DESIGNED FOR A FACTORED RESISTANCE OF 120 TONS PER PILE.

DRIVE PILES AT END BENT NO. 2 TO A REQUIRED DRIVING RESISTANCE OF 200 TONS PER PILE.

DO NOT USE SLURRY CONSTRUCTION FOR DRILLED PIERS AT BENT NO. 1 AND BENT NO. 2.

SID INSPECTIONS MAY BE REQUIRED FOR DRILLED PIERS. THE ENGINEER WILL DETERMINE THE NEED FOR SID INSPECTIONS. FOR SID INSPECTIONS, SEE SECTION 411 OF THE STANDARD SPECIFICATIONS.

CSL TUBES ARE REQUIRED AND CSL TESTING MAY BE REQUIRED FOR DRILLED PIERS. THE ENGINEER WILL DETERMINE THE NEED FOR CSL TESTING. FOR CSL TESTING, SEE SECTION 411 OF THE STANDARD SPECIFICATIONS.

DWN. BY: WDC	DATE: 4/2017
CHKD. BY: ACO	DATE: 12/2017
DES. EGR. OF RECORD: ACO	DATE: 12/2017

STATE OF NORTH CAROLINA
DEPARTMENT OF TRANSPORTATION
RALEIGH

GENERAL DRAWING
FOUNDATION LAYOUT

FOR BRIDGE OVER
NEUSE RIVER ON NC42
BETWEEN SR 2008 AND SR 1705

REVISIONS								SHEET NO.
NO.	BY:	DATE:	NO.	BY:	DATE:			S-4
1			3					TOTAL SHEETS
2			4					59

TOTAL BILL OF MATERIAL

	CONSTRUCTION, MAINTENANCE, & REMOVAL OF TEMPORARY ACCESS	REMOVAL OF EXISTING STRUCTURE	ASBESTOS ASSESSMENT	4'-6" Ø DRILLED PIERS IN SOIL	4'-6" Ø DRILLED PIERS NOT IN SOIL	PERMANENT STEEL CASING FOR 4'-6" Ø DRILLED PIERS	SID INSPECTIONS	CSL TESTING	UNCLASSIFIED STRUCTURE EXCAVATION	REINFORCED CONCRETE DECK SLAB	GROOVING BRIDGE FLOORS	CLASS A CONCRETE	BRIDGE APPROACH SLABS	REINFORCING STEEL	SPIRAL COLUMN REINFORCING STEEL	MODIFIED 72" PRESTRESSED CONCRETE GIRDERS		PILE DRIVING EQUIPMENT SETUP FOR HP 12 X 53 STEEL PILES	HP 12 X 53 STEEL PILES		TWO BAR METAL RAIL	1'-2" X 2'-6" CONCRETE PARAPET
	LUMP SUM	LUMP SUM	LUMP SUM	LIN. FT.	LIN. FT.	LIN. FT.	EACH	EACH	LUMP SUM	SQ.FT.	SQ.FT.	CU.YDS.	LUMP SUM	LBS.	LBS.	NO.	LIN.FT.	EACH	NO.	LIN.FT.	LIN.FT.	LIN.FT.
SUPERSTRUCTURE										36,378	30,818		LUMP SUM			33	4,097.50				733.67	748.67
END BENT NO. 1									LUMP SUM			70.2		11,014				20	20	700		
BENT NO. 1				54.25	72.00	64.60						140.6		37,008	6,145							
BENT NO. 2				54.25	72.00	60.95						140.4		37,008	6,145							
END BENT NO. 2									LUMP SUM			70.2		11,014				20	20	500		
TOTAL	LUMP SUM	LUMP SUM	LUMP SUM	108.50	144.00	125.55	1	1	LUMP SUM	36,378	30,818	421.4	LUMP SUM	96,044	12,290	33	4,097.50	40	40	1200	733.67	748.67

TOTAL BILL OF MATERIAL

	1'-2" X 2'-8" CONCRETE PARAPET	RIP RAP CLASS II (2'-0" THICK)	GEOTEXTILE FOR DRAINAGE	ELASTOMERIC BEARINGS
	LIN.FT.	TONS	SQ. YARDS	LUMP SUM
SUPERSTRUCTURE	423.33			LUMP SUM
END BENT NO. 1		390	435	
BENT NO. 1		323	359	
BENT NO. 2				
END BENT NO. 2		320	355	
TOTAL	423.33	1,033	1,149	LUMP SUM

GENERAL NOTES

ASSUMED LIVE LOAD = HL-93 OR ALTERNATE LOADING.

THIS BRIDGE HAS BEEN DESIGNED IN ACCORDANCE WITH THE REQUIREMENTS OF THE AASHTO LRFD BRIDGE DESIGN SPECIFICATIONS.

THIS BRIDGE IS LOCATED IN SEISMIC ZONE 1.

FOR OTHER DESIGN DATA AND GENERAL NOTES, SEE SHEET SN.

FOR EROSION CONTROL MEASURES, SEE EROSION CONTROL PLANS.

AFTER SERVING AS A TEMPORARY STRUCTURE, THE EXISTING STRUCTURE CONSISTING OF 7 SPANS @ 50' OF REINF CONC CHANNELS WITH REINF CONC DECK WITH AWS, WITH A CLEAR RDWY WIDTH OF 24'-2", ON REINF CONC SPILL THRU END BENTS AND REINF CONC POST AND WEB BENTS ON SPREAD FOOTINGS, LOCATED AT THE PROPOSED SITE SHALL BE REMOVED. THE EXISTING BRIDGE IS PRESENTLY NOT POSTED FOR LOAD LIMIT. SHOULD THE STRUCTURAL INTEGRITY OF THE BRIDGE DETERIORATE DURING CONSTRUCTION OF THE PROPOSED BRIDGE, A LOAD LIMIT MAY BE POSTED AND MAY BE REDUCED AS FOUND NECESSARY DURING THE LIFE OF THE PROJECT.

FOR ASBESTOS ASSESSMENT FOR BRIDGE DEMOLITION AND RENOVATION ACTIVITIES, SEE SPECIAL PROVISIONS.

THE SUBSTRUCTURE OF THE EXISTING BRIDGE INDICATED ON THE PLANS IS FROM THE BEST INFORMATION AVAILABLE. SINCE THIS INFORMATION IS SHOWN FOR THE CONVENIENCE OF THE CONTRACTOR, THE CONTRACTOR SHALL HAVE NO CLAIM WHATSOEVER AGAINST THE DEPARTMENT OF TRANSPORTATION FOR ANY DELAYS OR ADDITIONAL COST INCURRED BASED ON DIFFERENCES BETWEEN THE EXISTING BRIDGE SUBSTRUCTURE SHOWN ON THE PLANS AND THE ACTUAL CONDITIONS AT THE PROJECT SITE.

THIS STRUCTURE HAS BEEN DESIGNED IN ACCORDANCE WITH "HEC 18-EVALUATING SCOUR AT BRIDGES".

FOR SUBMITTAL OF WORKING DRAWINGS, SEE SPECIAL PROVISIONS.

FOR FALSEWORK AND FORMWORK, SEE SPECIAL PROVISIONS.

FOR CRANE SAFETY, SEE SPECIAL PROVISIONS.

FOR GROUT FOR STRUCTURES, SEE SPECIAL PROVISIONS.

THE MATERIAL SHOWN IN THE CROSS-HATCHED AREA SHALL BE EXCAVATED FOR A DISTANCE OF 73 FT. LEFT, AND 80' RIGHT, EACH SIDE OF CENTERLINE ROADWAY AS DIRECTED BY THE ENGINEER. THIS WORK WILL BE PAID FOR AT THE CONTRACT LUMP SUM PRICE FOR UNCLASSIFIED STRUCTURE EXCAVATION. SEE SECTION 412 OF THE STANDARD SPECIFICATIONS.

REMOVABLE FORMS MAY BE USED IN LIEU OF METAL STAY-IN-PLACE FORMS IN ACCORDANCE WITH ARTICLE 420-3 OF THE STANDARD SPECIFICATIONS.

NEEDLE BEAMS WILL NOT BE ALLOWED UNLESS OTHERWISE CALLED FOR ON THE PLANS OR APPROVED BY THE ENGINEER.

FOR LIMITS OF TEMPORARY SHORING FOR MAINTENANCE OF TRAFFIC, SEE TRAFFIC CONTROL PLANS. FOR PAY ITEM FOR TEMPORARY SHORING FOR MAINTENANCE OF TRAFFIC, SEE ROADWAY PLANS.

REMOVAL OF THE EXISTING BRIDGE SHALL BE PERFORMED SO AS NOT TO ALLOW DEBRIS TO FALL INTO THE WATER. THE CONTRACTOR SHALL REMOVE THE BRIDGE AND SUBMIT PLANS FOR DEMOLITION IN ACCORDANCE WITH ARTICLE 402-2 OF THE STANDARD SPECIFICATIONS.

FOR CONSTRUCTION, MAINTENANCE, AND REMOVAL OF TEMPORARY ACCESS, SEE SPECIAL PROVISIONS.

AT THE CONTRACTOR'S OPTION, AND UPON REMOVAL OF THE CAUSEWAY, THE CLASS II RIP RAP USED IN THE CAUSEWAY MAY BE PLACED AS RIP RAP SLOPE PROTECTION. SEE SPECIAL PROVISIONS FOR CONSTRUCTION, MAINTENANCE AND REMOVAL OF TEMPORARY ACCESS AT STATION 64+20.00 -L-.

NO MORE THAN 50% OF THE FLOW AREA WILL BE BLOCKED BY THE CAUSEWAY AT ANY GIVEN TIME.

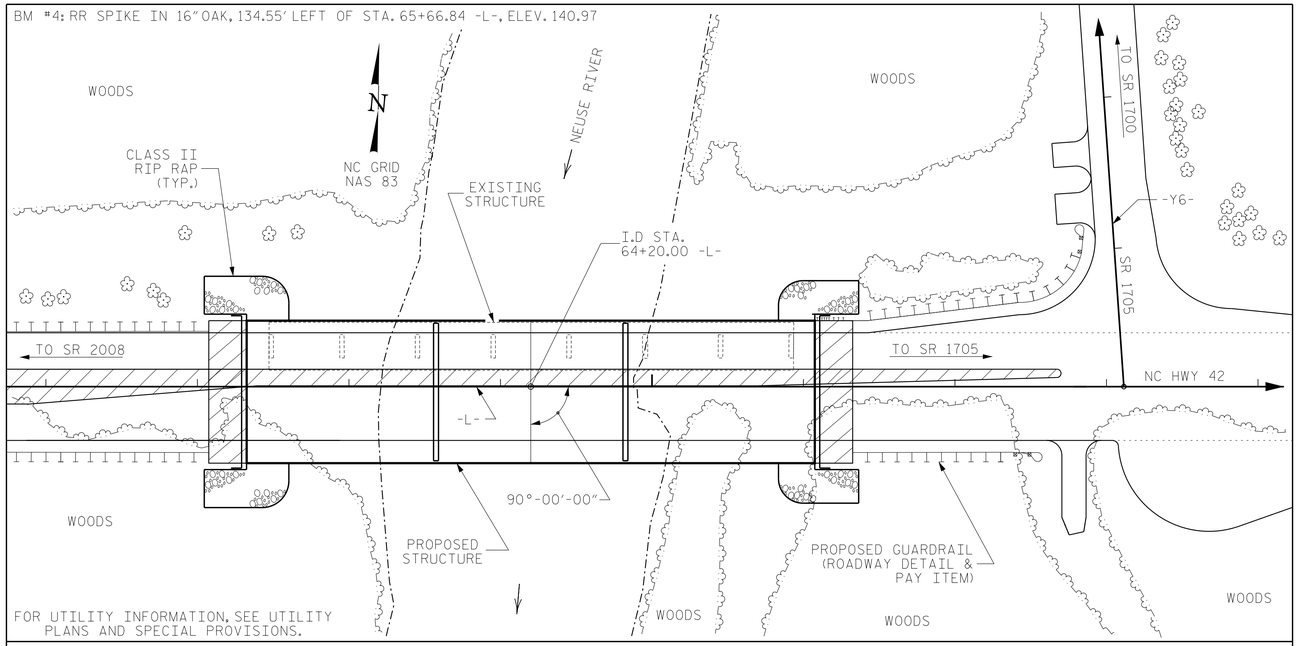

LOCATION SKETCH

HYDRAULIC DATA

DESIGN DISCHARGE	= 22300	CFS
DESIGN FREQUENCY	= 50	YRS
DESIGN HW ELEVATION	= 150.5	FT
BASE DISCHARGE	= 25100	CFS
BASE FREQUENCY	= 100	YRS
BASE HW ELEVATION	= 151.8	FT
DRAINAGE AREA	= 1150	SQ. MI.

OVERTOPPING FLOOD DATA

OVERTOPPING DISCHARGE	= >32400	CFS
OVERTOPPING FREQUENCY	= 500+	YRS
OVERTOPPING ELEVATION	= 160.0✳	FT

✳ - OVERTOPPING AT STA. 69+06 -L-

V&M
Vaughn & Melton
Consulting Engineers
Asheville, North Carolina
828-253-2796
Raleigh, NC 919-977-9455
Charlotte, NC 704-357-0488
Boone, NC 828-355-9933
Tri-Cities, TN 423-467-8401
Knoxville, TN 865-546-5800
Spartanburg, SC 864-574-4775
Charleston, SC 843-974-5650
Middlesboro, KY 606-248-6600
Atlanta, GA 770-627-3590

Copyright © 2006 Vaughn & Melton, Inc. All Rights Reserved

NORTH CAROLINA PROFESSIONAL SEAL ENGINEER HARDY L. WILLIS
SEAL 029717
7/17/2018 9:03:43 AM EDT

DOCUMENT NOT CONSIDERED FINAL UNLESS ALL SIGNATURES COMPLETED

PROJECT NO. R-3825B
JOHNSTON COUNTY
STATION: 64+20.00 -L-

SHEET 5 OF 5

STATE OF NORTH CAROLINA
DEPARTMENT OF TRANSPORTATION
RALEIGH

GENERAL DRAWING
FOR BRIDGE OVER NEUSE RIVER ON NC42 BETWEEN SR 2008 AND SR 1705

DWN. BY: WDC DATE: 4/2017
CHKD. BY: ACO DATE: 12/2017
DES. EGR. OF RECORD: ACO DATE: 12/2017

REVISIONS						SHEET NO.
NO.	BY:	DATE:	NO.	BY:	DATE:	S-5
1			3			TOTAL SHEETS
2			4			59

LOAD AND RESISTANCE FACTOR RATING (LRFR) SUMMARY FOR PRESTRESSED CONCRETE GIRDERS

LEVEL		VEHICLE	WEIGHT (W) (TONS)	CONTROLLING LOAD RATING (#)	MINIMUM RATING FACTORS (RF)	TONS = W × RF	STRENGTH I LIMIT STATE											SERVICE III LIMIT STATE						COMMENT NUMBER
							LIVE-LOAD FACTORS (γ_{LL})	MOMENT					SHEAR					LIVE-LOAD FACTORS (γ_{LL})	MOMENT					
								DISTRIBUTION FACTORS (DF)	RATING FACTOR	SPAN	GIRDER LOCATION	DISTANCE FROM LEFT END OF SPAN (ft)	DISTRIBUTION FACTORS (DF)	RATING FACTOR	SPAN	GIRDER LOCATION	DISTANCE FROM LEFT END OF SPAN (ft)		DISTRIBUTION FACTORS (DF)	RATING FACTOR	SPAN	GIRDER LOCATION	DISTANCE FROM LEFT END OF SPAN (ft)	
DESIGN LOAD RATING		HL-93 (INVENTORY)	N/A	1	1.02	--	1.75	0.918	1.39	A	ER	61.38	0.918	1.35	A	ER	36.82	0.80	0.918	1.02	A	ER	61.38	
		HL-93 (OPERATING)	N/A		1.75	--	1.35	0.918	1.81	A	ER	61.38	0.918	1.75	A	ER	36.82	N/A	--	--	--	--	--	
		HS-20 (INVENTORY)	36.00	2	1.50	53.821	1.75	0.918	2.05	A	ER	61.38	0.918	2.10	A	ER	24.55	0.80	0.918	1.50	A	ER	61.38	
		HS-20 (OPERATING)	36.00		2.65	95.574	1.35	0.918	2.65	A	ER	61.38	0.918	2.73	A	ER	24.55	N/A	--	--	--	--	--	
LEGAL LOAD RATING	SINGLE VEHICLE (SV)	SNSH	13.50		2.39	32.297	1.40	0.918	4.10	A	ER	61.38	0.918	5.70	A	ER	12.28	0.80	0.918	2.39	A	ER	61.38	
		SNGARBS2	20.00		2.39	47.848	1.40	0.918	4.10	A	ER	61.38	0.918	5.22	A	ER	12.28	0.80	0.918	2.39	A	ER	61.38	
		SNAGRIS2	22.00		2.39	52.633	1.40	0.918	4.10	A	ER	61.38	0.918	4.79	A	ER	12.28	0.80	0.918	2.39	A	ER	61.38	
		SNCOTTS3	27.25		1.80	49.185	1.40	0.918	3.09	A	ER	61.38	0.918	3.61	A	ER	24.55	0.80	0.918	1.80	A	ER	61.38	
		SNAGGRS4	34.93		1.46	51.121	1.40	0.918	2.51	A	ER	61.38	0.918	2.79	A	ER	24.55	0.80	0.918	1.46	A	ER	61.38	
		SNS5A	35.55		1.43	51.006	1.40	0.918	2.46	A	ER	61.38	0.918	2.79	A	ER	24.55	0.80	0.918	1.43	A	ER	61.38	
		SNS6A	39.95		1.31	52.256	1.40	0.918	2.24	A	ER	61.38	0.918	2.49	A	ER	24.55	0.80	0.918	1.31	A	ER	61.38	
		SNS7B	42.00		1.24	51.924	1.40	0.918	2.12	A	ER	61.38	0.918	2.37	A	ER	24.55	0.80	0.918	1.24	A	ER	61.38	
	TRUCK TRACTOR SEMI-TRAILER (TTST)	TNAGRIT3	33.00		1.58	52.100	1.40	0.918	2.70	A	ER	61.38	0.918	3.09	A	ER	24.55	0.80	0.918	1.58	A	ER	61.38	
		TNT4A	33.08		1.58	52.259	1.40	0.918	2.71	A	ER	61.38	0.918	3.02	A	ER	24.55	0.80	0.918	1.58	A	ER	61.38	
		TNT6A	41.60		1.28	53.079	1.40	0.918	2.19	A	ER	61.38	0.918	2.50	A	ER	24.55	0.80	0.918	1.28	A	ER	61.38	
		TNT7A	42.00		1.27	53.489	1.40	0.918	2.18	A	ER	61.38	0.918	2.44	A	ER	24.55	0.80	0.918	1.27	A	ER	61.38	
		TNT7B	42.00		1.30	54.480	1.40	0.918	2.22	A	ER	61.38	0.918	2.34	A	ER	24.55	0.80	0.918	1.30	A	ER	61.38	
		TNAGRIT4	43.00		1.25	53.717	1.40	0.918	2.14	A	ER	61.38	0.918	2.25	A	ER	24.55	0.80	0.918	1.25	A	ER	61.38	
		TNAGT5A	45.00		1.19	53.326	1.40	0.918	2.03	A	ER	61.38	0.918	2.19	A	ER	24.55	0.80	0.918	1.19	A	ER	61.38	
		TNAGT5B	45.00	3	1.18	52.985	1.40	0.918	2.02	A	ER	61.38	0.918	2.11	A	ER	24.55	0.80	0.918	1.18	A	ER	61.38	

LOAD FACTORS:

DESIGN LOAD RATING FACTORS	LIMIT STATE	γ_{DC}	γ_{DW}
	STRENGTH I	1.25	1.50
	SERVICE III	1.00	1.00

NOTES:

MINIMUM RATING FACTORS ARE BASED ON THE STRENGTH I AND SERVICE III LIMIT STATES.

ALLOWABLE STRESSES FOR SERVICE III LIMIT STATE ARE AS REQUIRED FOR DESIGN.

COMMENTS:

1.
2.
3.
4.

(#) CONTROLLING LOAD RATING

(1) DESIGN LOAD RATING (HL-93)

(2) DESIGN LOAD RATING (HS-20)

(3) LEGAL LOAD RATING **

** SEE CHART FOR VEHICLE TYPE

GIRDER LOCATION

I - INTERIOR GIRDER
EL - EXTERIOR LEFT GIRDER
ER - EXTERIOR RIGHT GIRDER

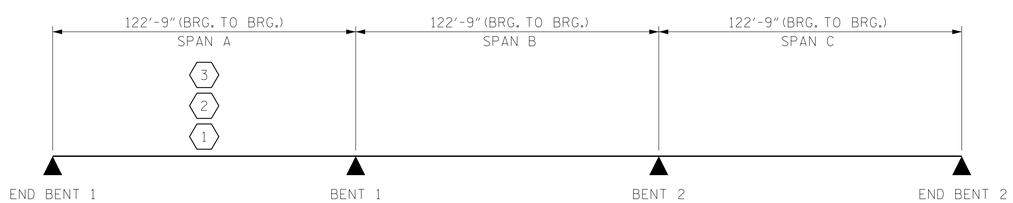

LRFR SUMMARY

PROJECT NO. R-3825B
JOHNSTON COUNTY
STATION: 64+20.00 -L-

Vaughn & Melton
Consulting Engineers
Asheville, North Carolina
828-253-2796
Raleigh, NC 919-977-9455
Charlotte, NC 704-357-0488
Boone, NC 828-355-9933
Tri-Cities, TN 423-467-8401
Knoxville, TN 865-546-5800
Spartanburg, SC 864-574-4775
Charleston, SC 843-974-5650
Middlesboro, KY 606-248-6600
Atlanta, GA 770-627-3590

Copyright © 2006 Vaughn & Melton, Inc. All Rights Reserved

NORTH CAROLINA PROFESSIONAL SEAL ENGINEER HANDY L. WILLIS
DocuSigned by: Handy Willis
CC287FC0220481...
7/17/2018 9:03:43 AM EDT

DOCUMENT NOT CONSIDERED FINAL UNLESS ALL SIGNATURES COMPLETED

DWN. BY: WDC DATE: 4/2017
CHKD. BY: ACO DATE: 12/2017
DES. EGR. OF RECORD: ACO DATE: 12/2017

STATE OF NORTH CAROLINA
DEPARTMENT OF TRANSPORTATION
RALEIGH

LRFR SUMMARY FOR PRESTRESSED CONCRETE GIRDERS

(NON-INTERSTATE TRAFFIC)

REVISIONS						
NO.	BY:	DATE:	NO.	BY:	DATE:	
1			3			
2			4			

SHEET NO. S-6
TOTAL SHEETS 59

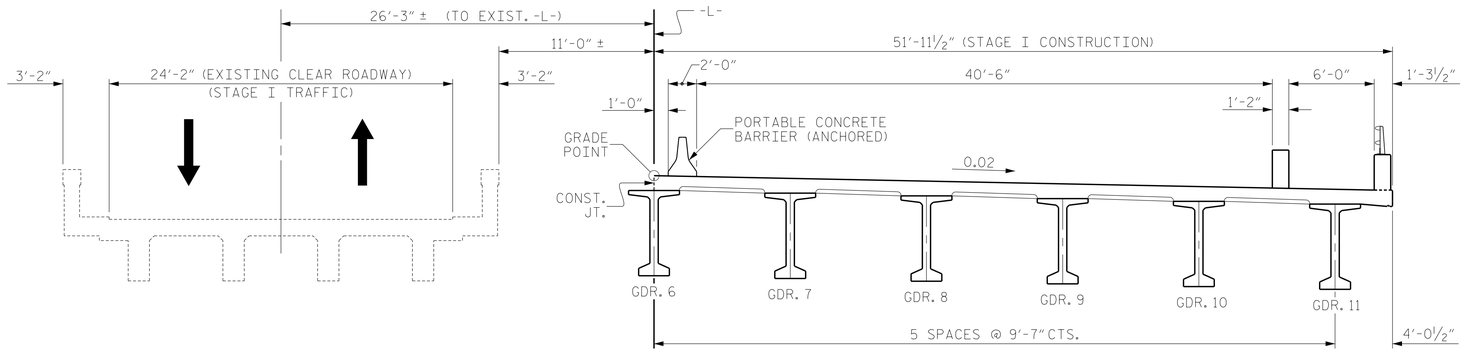

STAGE I

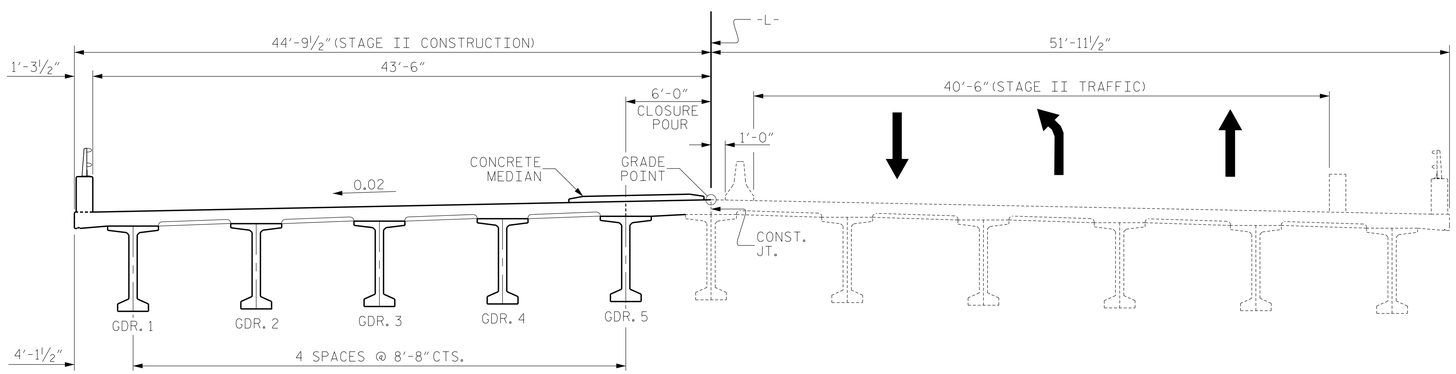

STAGE II

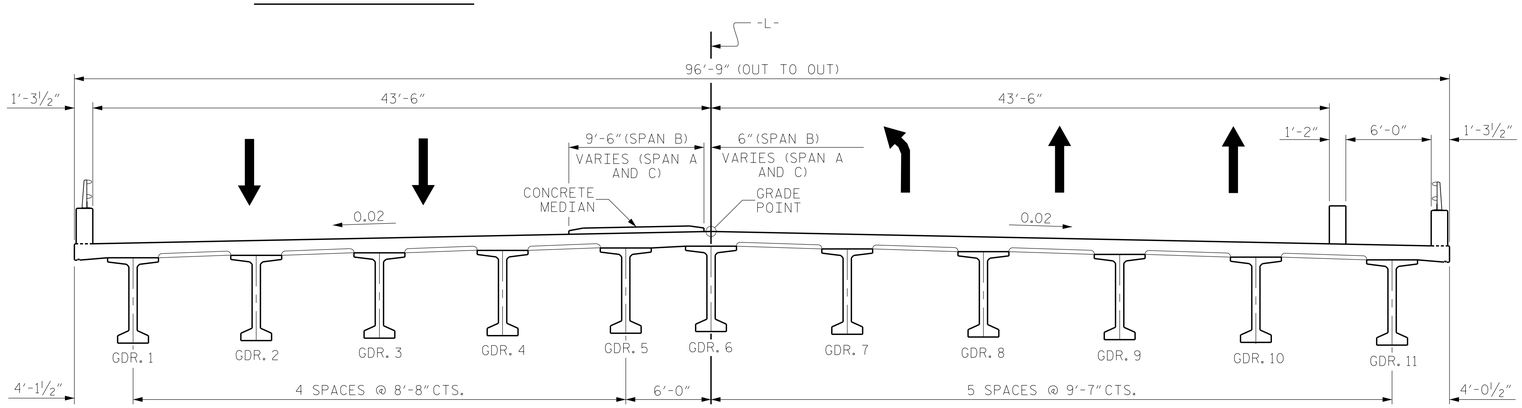

FINAL SECTION

SEE TRAFFIC CONTROL PLAN FOR LOCATION
AND PAY LIMITS OF PORTABLE CONCRETE BARRIER

V&M
Vaughn & Melton
Consulting Engineers
Asheville, North Carolina
828-253-2796
Raleigh, NC 919-977-9455
Charlotte, NC 704-357-0488
Boone, NC 828-355-9933
Tri-Cities, TN 423-467-8401
Knoxville, TN 865-546-5800
Spartanburg, SC 864-574-4775
Charleston, SC 843-974-5650
Middlesboro, KY 606-248-6600
Atlanta, GA 770-627-3590

Copyright © 2006 Vaughn & Melton, Inc. All Rights Reserved

PROJECT NO. R-3825B
JOHNSTON COUNTY
STATION: 64+20.00 -L-

NORTH CAROLINA PROFESSIONAL SEAL ENGINEER HARDY L. WILLIS
Hardy L. Willis
7/17/2018 9:03:43 AM EDT

DOCUMENT NOT CONSIDERED
FINAL UNLESS ALL
SIGNATURES COMPLETED

STATE OF NORTH CAROLINA
DEPARTMENT OF TRANSPORTATION
RALEIGH

CONSTRUCTION STAGING SEQUENCE

DWN. BY: WDC	DATE: 5/2017	
CHKD. BY: ACO	DATE: 12/2017	
DES. EGR. OF RECORD: ACO	DATE: 12/2017	

REVISIONS						SHEET NO.
NO.	BY:	DATE:	NO.	BY:	DATE:	S-7
1			3			TOTAL SHEETS
2			4			59

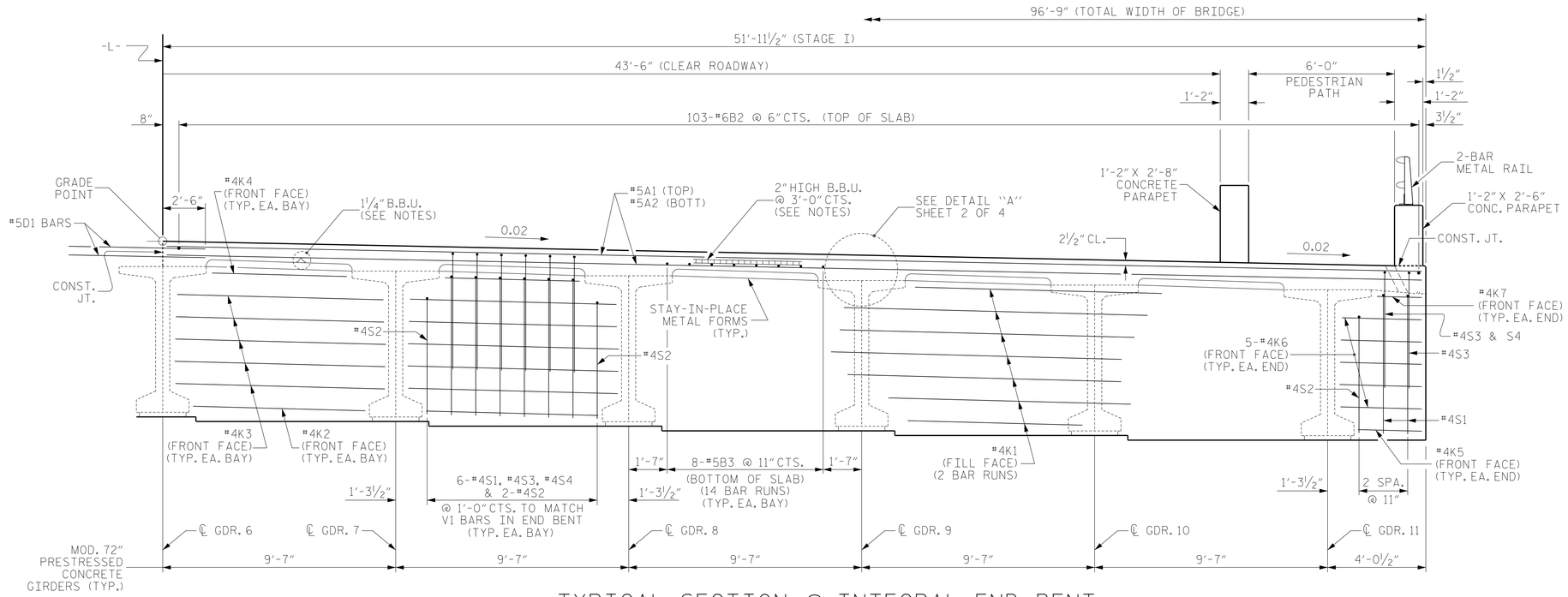

TYPICAL SECTION @ INTEGRAL END BENT

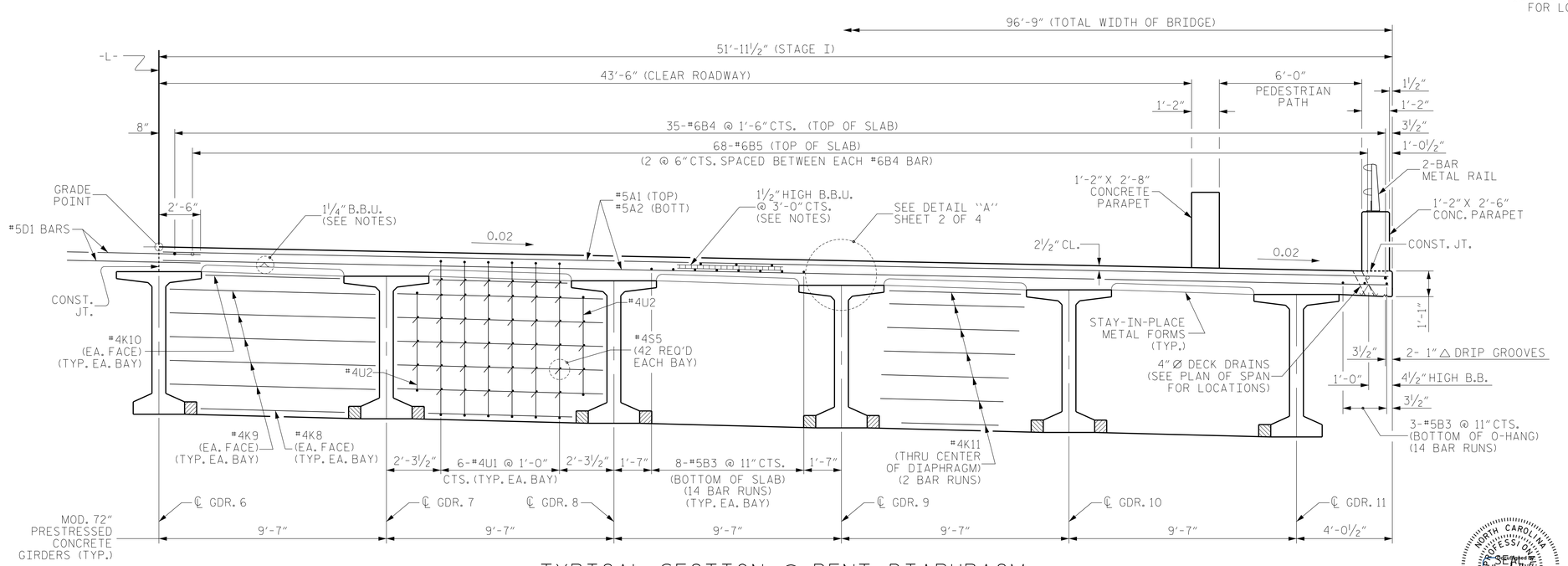

TYPICAL SECTION @ BENT DIAPHRAGM

NOTES

PROVIDE 1 1/4" HIGH BEAM BOLSTERS UPPER AT 4'-0" CTS. ATOP THE METAL STAY-IN-PLACE FORMS TO SUPPORT THE BOTTOM MAT OF 'A' BARS. WHEN USING REMOVABLE FORMS, PROVIDE CONTINUOUS HIGH CHAIRS FOR METAL DECK (C.H.C.M.) @ 4'-0" CTS. WITH A HEIGHT TO SUPPORT THE BOTTOM MAT OF 'A' BARS A CLEAR DISTANCE OF 2 1/2" ABOVE THE TOP OF THE REMOVABLE FORM.

LONGITUDINAL STEEL MAY BE SHIFTED SLIGHTLY, AS NECESSARY, TO AVOID INTERFERENCE WITH STIRRUPS IN PRESTRESSED CONCRETE GIRDERS.

DOWELS SHALL BE PLACED IN THE SAME HORIZONTAL PLANE AS THE TOP SLAB REINFORCING STEEL.

PREVIOUSLY CAST CONCRETE IN A CONTINUOUS UNIT SHALL HAVE ATTAINED A MINIMUM COMPRESSIVE STRENGTH OF 3,000 PSI BEFORE ADDITIONAL CONCRETE IS CAST IN THE UNIT.

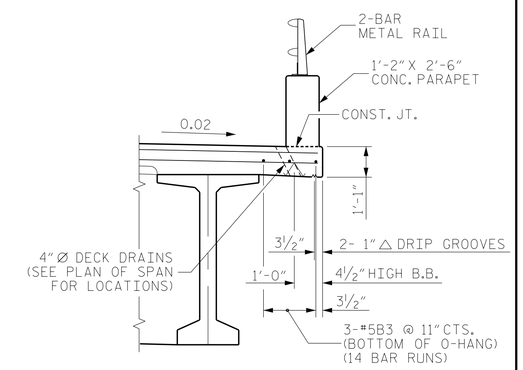

OVERHANG DETAIL

Vaughn & Melton
Consulting Engineers
Asheville, North Carolina
828-253-2796
Boone, NC 828-355-9933
Tri-Cities, TN 423-467-840
Knoxville, TN 865-546-5800
Spartanburg, SC 864-574-4775
Charleston, SC 843-974-5650
Middlesboro, KY 606-248-5600
Atlanta, GA 770-627-3590
Raleigh, NC 919-977-9455
Charlotte, NC 704-357-0488

Copyright © 2006 Vaughn & Melton, Inc. All Rights Reserved

PROJECT NO. R-3825B

JOHNSTON COUNTY

STATION: 64+20.00 -L-

SHEET 1 OF 4

STATE OF NORTH CAROLINA
DEPARTMENT OF TRANSPORTATION
RALEIGH

SUPERSTRUCTURE

TYPICAL SECTION (STAGE I)

NORTH CAROLINA PROFESSIONAL ENGINEER SEAL HARDY L. WILLIS

Digitally signed by Hardy Willis
DN: cn=Hardy Willis, c=US, o=NCDOT, ou=Engineering, ou=Certificate Type: Individual, ou=Serial Number: 5000000000
Date: 2018.07.17 09:03:43 -04'00'

7/17/2018 9:03:43 AM EDT

DOCUMENT NOT CONSIDERED FINAL UNLESS ALL SIGNATURES COMPLETED

DRAWN BY :	WDC	DATE :	5/2017
CHECKED BY :	ACO	DATE :	12/2017
DESIGN ENGINEER OF RECORD:	ACO	DATE :	12/2017

REVISIONS

NO.	BY:	DATE:	NO.	BY:	DATE:
1			3		
2			4		

SHEET NO. S-8

TOTAL SHEETS 59

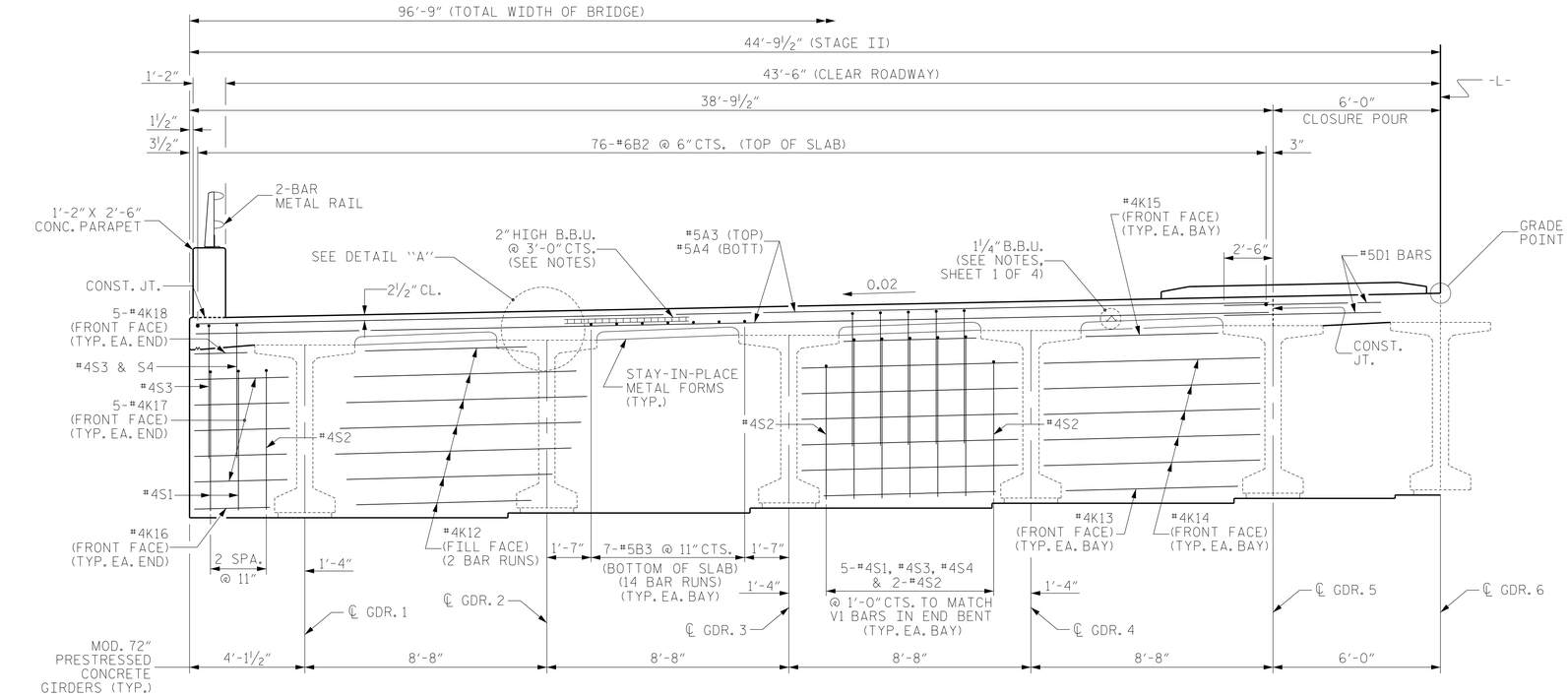

TYPICAL SECTION @ INTEGRAL END BENT

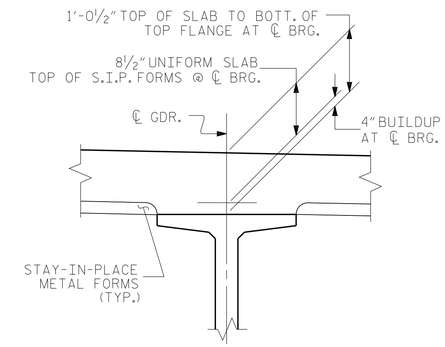

DETAIL "A"

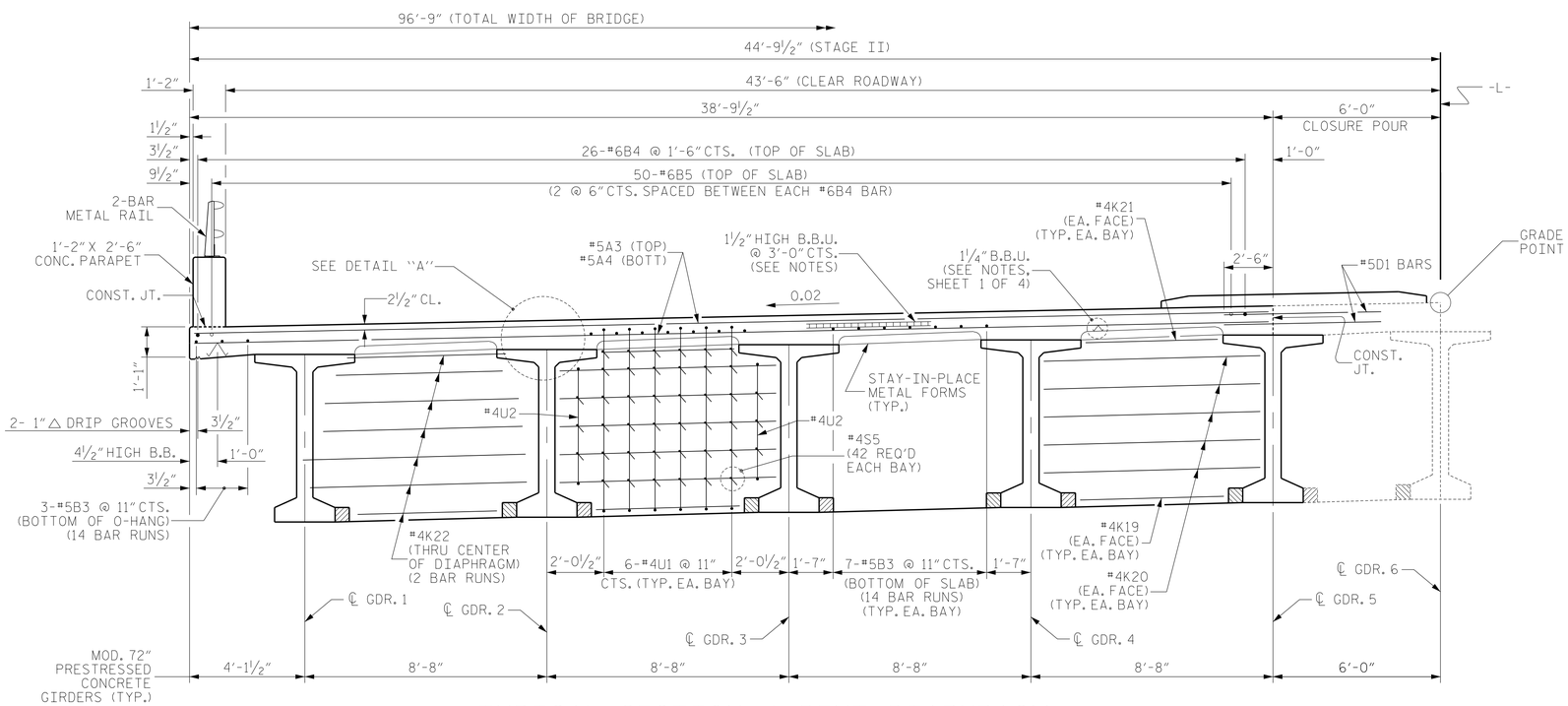

TYPICAL SECTION @ BENT DIAPHRAGM

Vaughn & Melton
Consulting Engineers
Asheville, North Carolina
828-253-2796

- Boone, NC 828-355-9933
- Tri-Cities, TN 423-467-8401
- Knoxville, TN 865-546-5800
- Spartanburg, SC 864-574-4775
- Charleston, SC 843-974-5650
- Middlesboro, KY 606-248-6600
- Atlanta, GA 770-627-3590
- Raleigh, NC 919-977-9455
- Charlotte, NC 704-357-0488

Copyright © 2006 Vaughn & Melton, Inc. All Rights Reserved

PROJECT NO. R-3825B
JOHNSTON COUNTY
STATION: 64+20.00 -L-

SHEET 2 OF 4

STATE OF NORTH CAROLINA
DEPARTMENT OF TRANSPORTATION
RALEIGH

SUPERSTRUCTURE

TYPICAL SECTION (STAGE II)

NORTH CAROLINA PROFESSIONAL SEAL ENGINEER HARDY L. WILLIS 027141 ACCEPTED FOR RECORD

7/17/2018 9:03:43 AM EDT

DOCUMENT NOT CONSIDERED FINAL UNLESS ALL SIGNATURES COMPLETED

REVISIONS							SHEET NO.
NO.	BY:	DATE:	NO.	BY:	DATE:		S-9
1			3				TOTAL SHEETS
2			4				59

DRAWN BY : WDC DATE : 5/2017
CHECKED BY : ACO DATE : 12/2017
DESIGN ENGINEER OF RECORD: ACO DATE : 12/2017

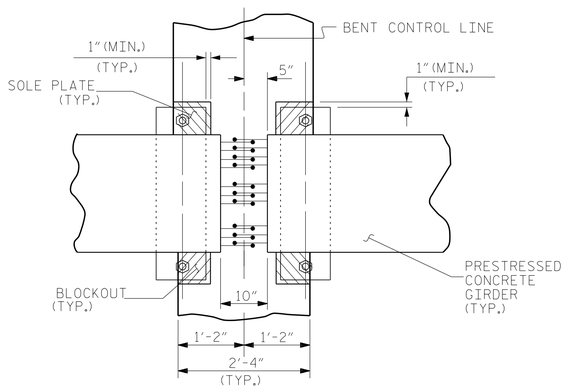

PLAN

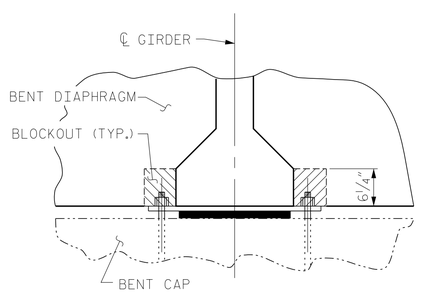

SECTION

BENT DIAPHRAGM BLOCKOUT DETAIL

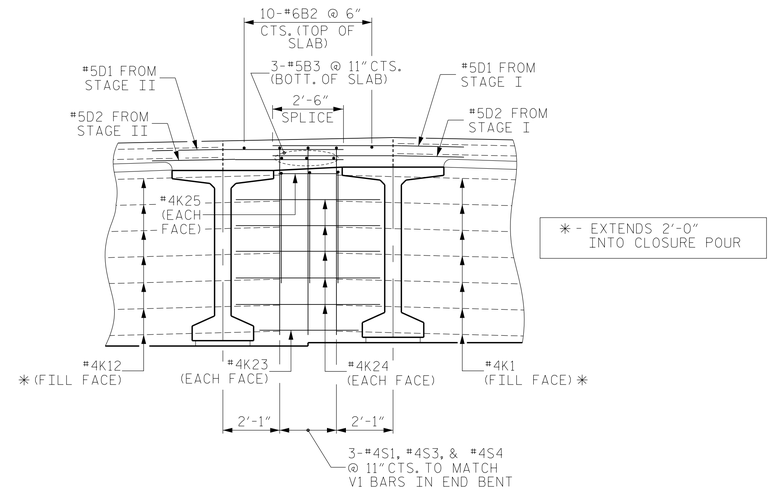

CLOSURE POUR DETAIL @ INTEGRAL END BENT

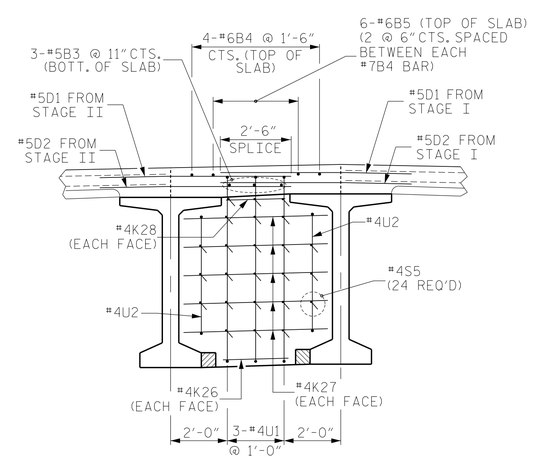

CLOSURE POUR DETAIL @ BENT DIAPHRAGM

V&M
Vaughn & Melton
Consulting Engineers
Asheville, North Carolina
828-253-2796
Raleigh, NC 919-977-9455
Charlotte, NC 704-357-0488
Boone, NC 828-355-9933
Tri-Cities, TN 423-467-8401
Knoxville, TN 865-546-5800
Spartanburg, SC 864-574-4775
Charleston, SC 843-974-5650
Middlesboro, KY 606-248-6600
Atlanta, GA 770-627-3590

Copyright © 2006 Vaughn & Melton, Inc. All Rights Reserved

PROJECT NO. R-3825B
JOHNSTON COUNTY
STATION: 64+20.00 -L-

SHEET 3 OF 4

STATE OF NORTH CAROLINA
DEPARTMENT OF TRANSPORTATION
RALEIGH

SUPERSTRUCTURE

TYPICAL SECTION (STAGE I & II)

NORTH CAROLINA PROFESSIONAL SEAL ENGINEER HAROLD L. WILLIS
DocuSigned by: Harold Willis
CC287CF0C2394B...
7/17/2018 9:03:43 AM EDT

DOCUMENT NOT CONSIDERED FINAL UNLESS ALL SIGNATURES COMPLETED

REVISIONS							SHEET NO.
NO.	BY:	DATE:	NO.	BY:	DATE:		S-10
1			3				TOTAL SHEETS
2			4				59

DRAWN BY : WDC DATE : 5/2017
CHECKED BY : ACO DATE : 12/2017
DESIGN ENGINEER OF RECORD: ACO DATE : 12/2017

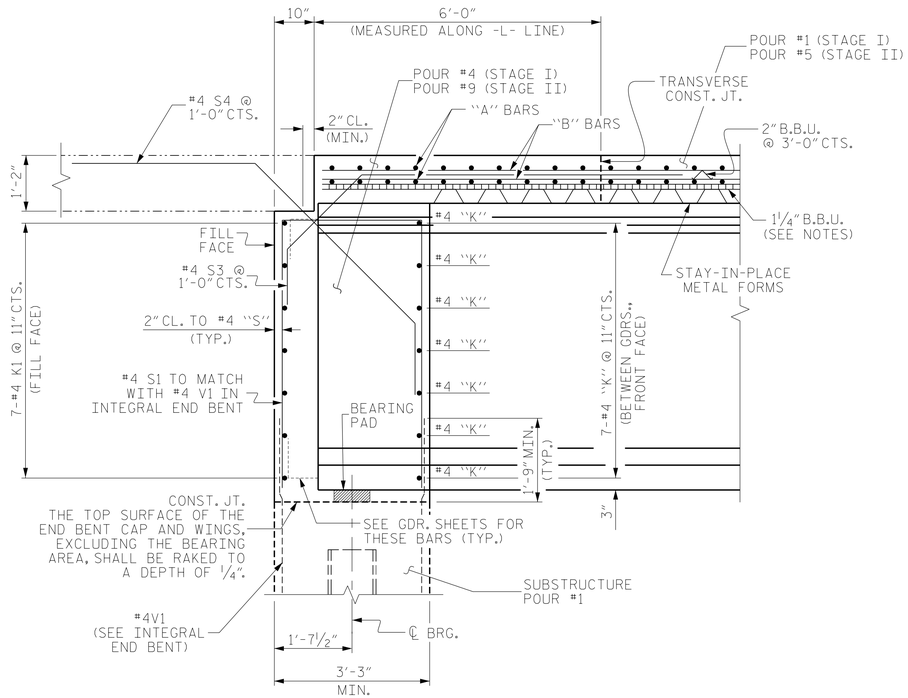

SECTION THRU INTEGRAL END BENT

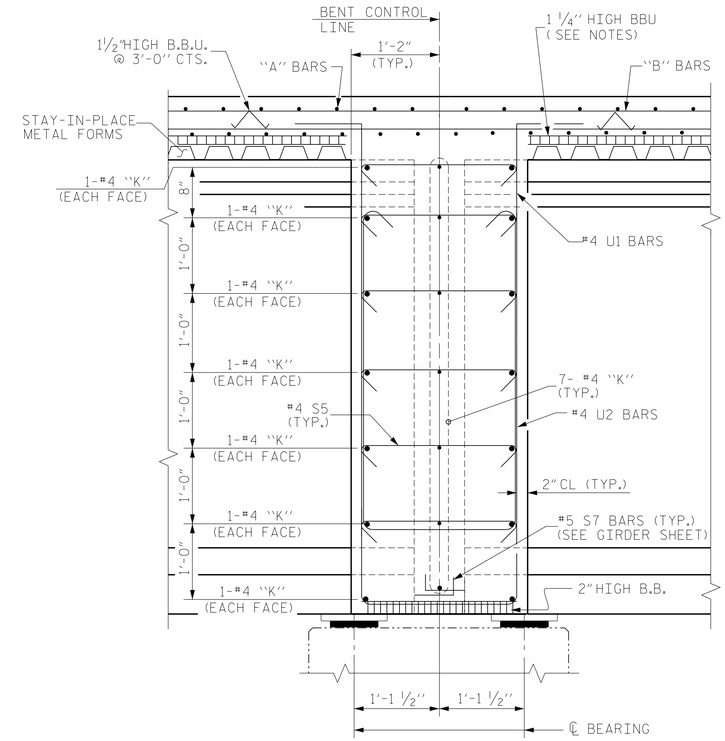

SECTION THRU BENT DIAPHRAGM

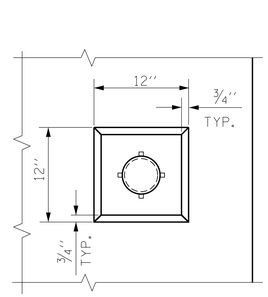

PLAN OF RECESS

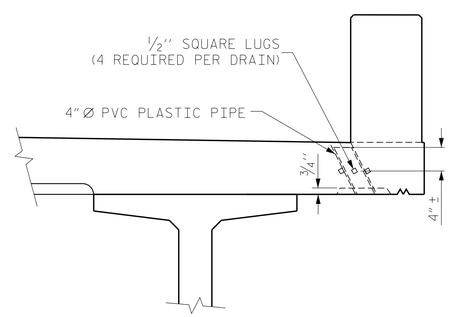

ELEVATION

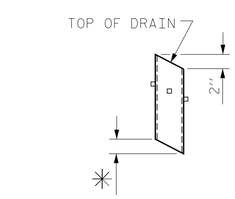

✳ TO BE SET TO MATCH SLOPE
OF BOTTOM OF OVERHANG
(10 DRAINS REQUIRED)

PIPE DETAIL

DRAIN DETAILS

TOP OF FLOOR DRAINS TO BE SET ⅜" BELOW SURFACE OF SLAB.

4 - ½" SQUARE LUGS TO BE GLUED TO THE P.V.C. PLASTIC PIPE AT EQUAL SPACES AROUND THE PIPE DRAIN APPROXIMATELY 4" FROM THE TOP OF THE PIPE.

THE 4" Ø PVC PLASTIC PIPE AND FITTINGS SHALL BE SCHEDULE 40 AND CONFORM TO ASTM D1785.

Vaughn & Melton
Consulting Engineers
Asheville, North Carolina
828-253-2796
Raleigh, NC 919-977-9455
Charlotte, NC 704-357-0488
Boone, NC 828-355-9933
Tri-Cities, TN 423-467-8401
Knoxville, TN 865-546-5800
Spartanburg, SC 864-574-4775
Charleston, SC 843-974-5650
Middlesboro, KY 606-248-6600
Atlanta, GA 770-627-3590

Copyright © 2006 Vaughn & Melton, Inc. All Rights Reserved

PROJECT NO. R-3825B
JOHNSTON COUNTY
STATION: 64+20.00 -L-

SHEET 4 OF 4

STATE OF NORTH CAROLINA
DEPARTMENT OF TRANSPORTATION
RALEIGH

SUPERSTRUCTURE

TYPICAL SECTION
(STAGE I & II)

NORTH CAROLINA PROFESSIONAL ENGINEER SEAL 019401 HARDY L. WILLIS
Signature Authorized By: Hardy Willis
CC2875CC-0E9A-4B1...
7/17/2018 9:03:43 AM EDT

DOCUMENT NOT CONSIDERED FINAL UNLESS ALL SIGNATURES COMPLETED

REVISIONS						SHEET NO.
NO.	BY:	DATE:	NO.	BY:	DATE:	S-11
1			3			TOTAL SHEETS
2			4			59

DRAWN BY : WDC DATE : 5/2017
CHECKED BY : ACO DATE : 12/2017
DESIGN ENGINEER OF RECORD: ACO DATE : 12/2017

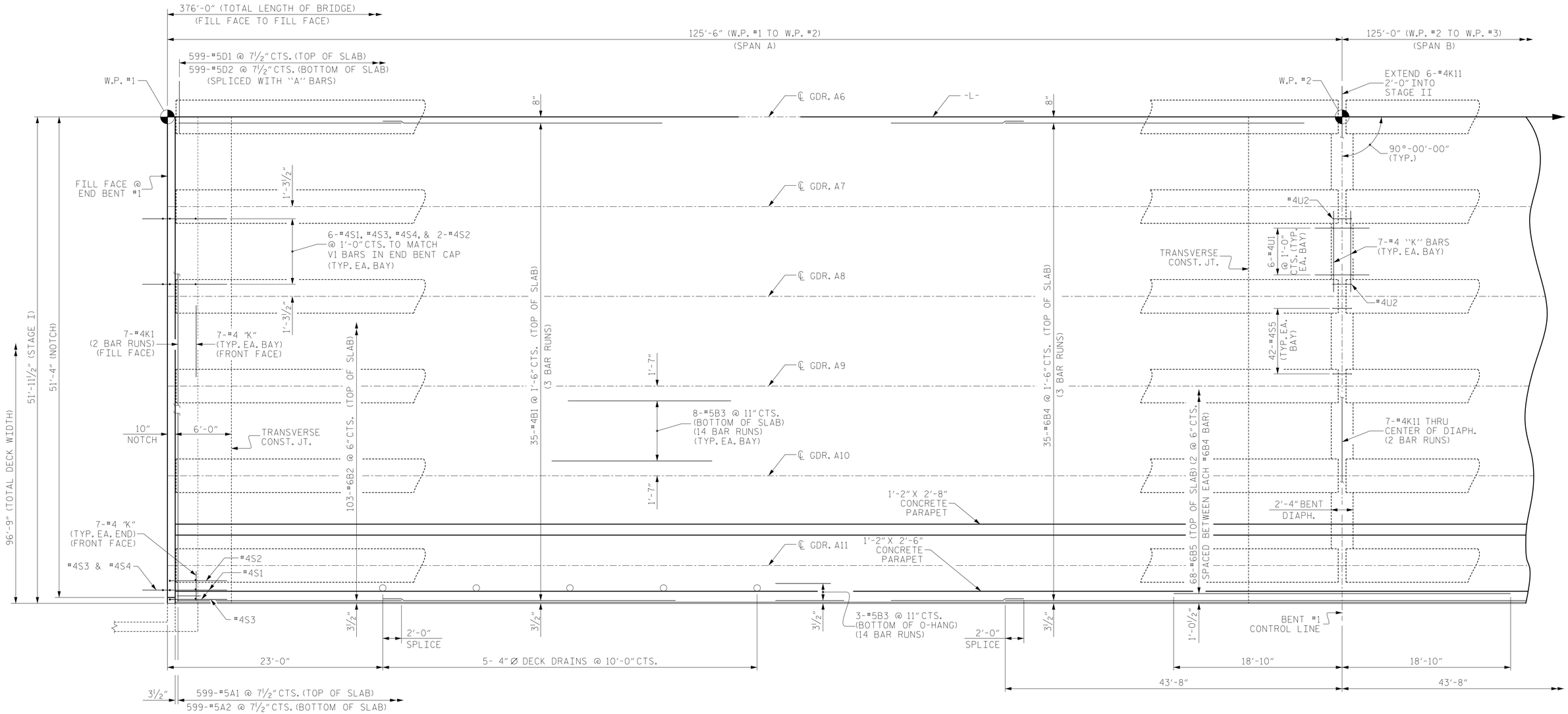

PLAN OF SPAN A

PROJECT NO. R-3825B

JOHNSTON COUNTY

STATION: 64+20.00 -L-

SHEET 1 OF 6

STATE OF NORTH CAROLINA
DEPARTMENT OF TRANSPORTATION
RALEIGH

SUPERSTRUCTURE

PLAN OF SPAN A
(STAGE I)

Vaughn & Melton
Consulting Engineers
Asheville, North Carolina
828-253-2796
Raleigh, NC 919-977-9455
Charlotte, NC 704-357-0488
Boone, NC 828-355-9933
Tri-Cities, TN 423-467-8401
Knoxville, TN 865-546-5800
Spartanburg, SC 864-574-4775
Charleston, SC 843-974-5650
Middlesboro, KY 606-248-6600
Atlanta, GA 770-627-3590

Copyright © 2006 Vaughn & Melton, Inc. All Rights Reserved

NORTH CAROLINA PROFESSIONAL ENGINEER SEAL HARDY L. WILLIS

Electronically Signed by Hardy L. Willis
(PE#22872) on 7/17/2018

7/17/2018 9:03:43 AM EDT

DOCUMENT NOT CONSIDERED FINAL UNLESS ALL SIGNATURES COMPLETED

DRAWN BY :	WDC	DATE :	7-2017
CHECKED BY :	ACO	DATE :	12-2017
DESIGN ENGINEER OF RECORD:	ACO	DATE :	12-2017

REVISIONS						SHEET NO.
NO.	BY:	DATE:	NO.	BY:	DATE:	S-12
1			3			TOTAL SHEETS
2			4			59

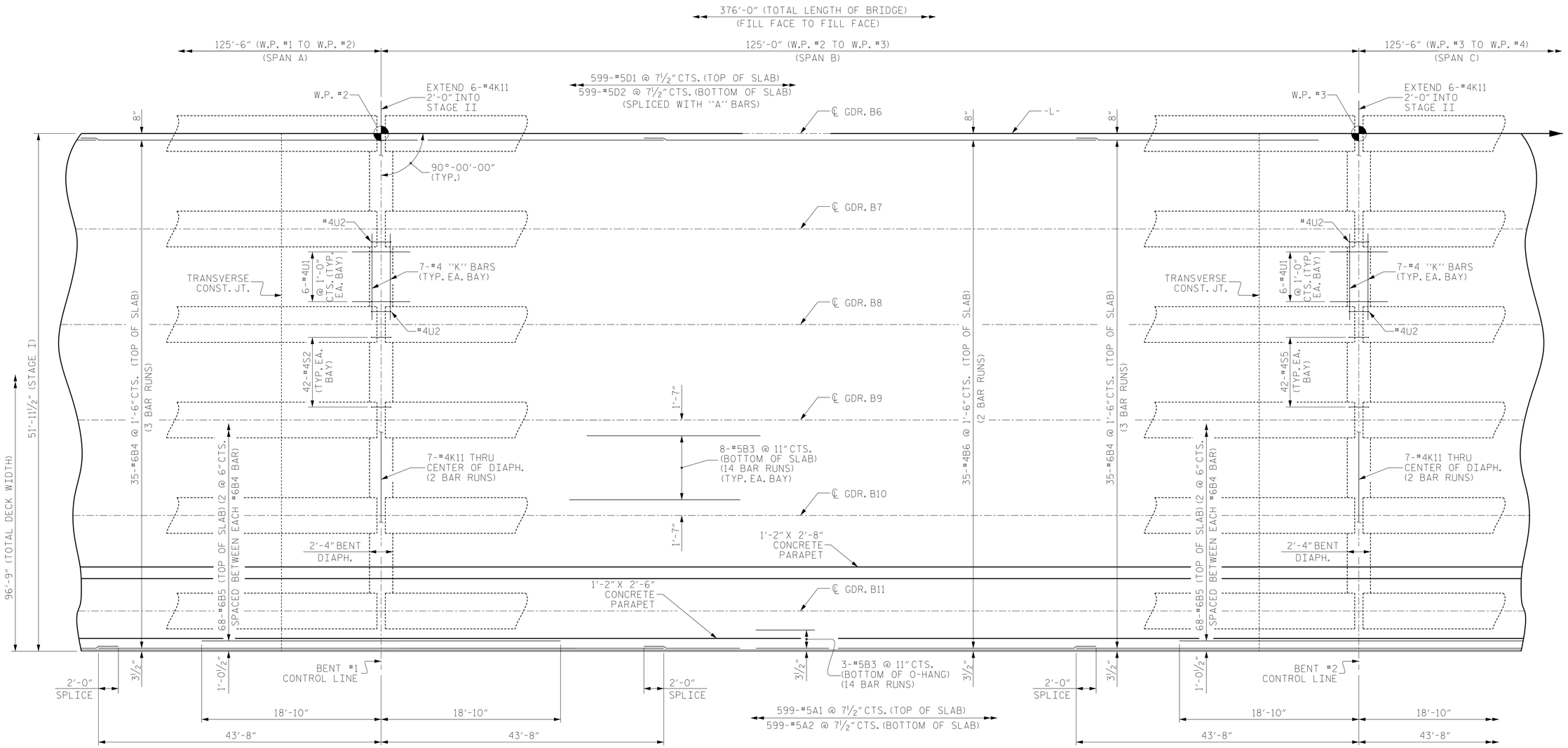

PLAN OF SPAN B

PROJECT NO. R-3825B

JOHNSTON COUNTY

STATION: 64+20.00 -L-

SHEET 2 OF 6

STATE OF NORTH CAROLINA
DEPARTMENT OF TRANSPORTATION
RALEIGH

SUPERSTRUCTURE

PLAN OF SPAN B
(STAGE I)

REVISIONS							SHEET NO.
NO.	BY:	DATE:	NO.	BY:	DATE:		S-13
1			3				TOTAL SHEETS
2			4				59

DRAWN BY : WDC DATE : 7-2017
CHECKED BY : ACO DATE : 12-2017
DESIGN ENGINEER OF RECORD: ACO DATE : 12-2017

V&M
Vaughn & Melton
Consulting Engineers
Asheville, North Carolina
828-253-2796
Raleigh, NC 919-977-9455
Charlotte, NC 704-357-0488
Boone, NC 828-355-9933
Tri-Cities, TN 423-467-8401
Knoxville, TN 865-546-5800
Spartanburg, SC 864-574-4775
Charleston, SC 843-974-5650
Middlesboro, KY 606-248-6600
Atlanta, GA 770-627-3590
Copyright © 2006 Vaughn & Melton, Inc. All Rights Reserved

NORTH CAROLINA PROFESSIONAL SEAL ENGINEER HARDY L. WILLIS
SEAL 025125
Hardy L. Willis
CC2818 C-0206 S-0481
7/17/2018 9:03:43 AM EDT

DOCUMENT NOT CONSIDERED FINAL UNLESS ALL SIGNATURES COMPLETED

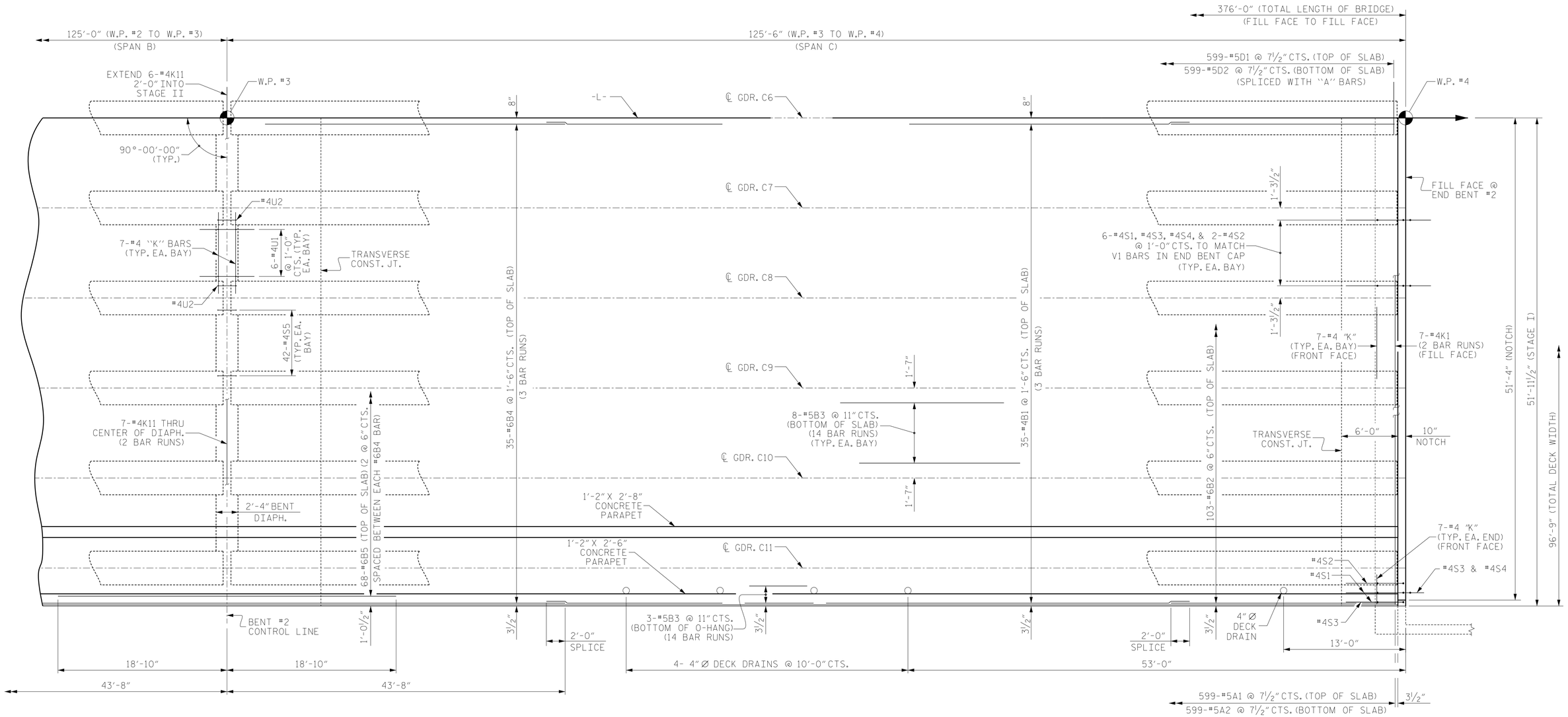

PLAN OF SPAN C

PROJECT NO. R-3825B

JOHNSTON COUNTY

STATION: 64+20.00 -L-

SHEET 3 OF 6

STATE OF NORTH CAROLINA
DEPARTMENT OF TRANSPORTATION
RALEIGH

SUPERSTRUCTURE

PLAN OF SPAN C
(STAGE I)

V&M
Vaughn & Melton
Consulting Engineers
Asheville, North Carolina
828-253-2796
Raleigh, NC 919-977-9455
Charlotte, NC 704-357-0488
Boone, NC 828-355-9933
Tri-Cities, TN 423-467-8401
Knoxville, TN 865-546-6800
Spartanburg, SC 864-574-4775
Charleston, SC 843-974-5650
Middlesboro, KY 606-248-6600
Atlanta, GA 770-627-3590

Copyright © 2006 Vaughn & Melton, Inc. All Rights Reserved

NORTH CAROLINA PROFESSIONAL SEAL ENGINEER HARDY L. WILLIS
Signature: Hardy Willis
Registration Number 19082
7/17/2018 9:03:43 AM EDT

DOCUMENT NOT CONSIDERED FINAL UNLESS ALL SIGNATURES COMPLETED

REVISIONS						SHEET NO.
NO.	BY:	DATE:	NO.	BY:	DATE:	S-14
1			3			TOTAL SHEETS
2			4			59

DRAWN BY : WDC DATE : 7-2017
CHECKED BY : ACO DATE : 12-2017
DESIGN ENGINEER OF RECORD: ACO DATE : 12-2017

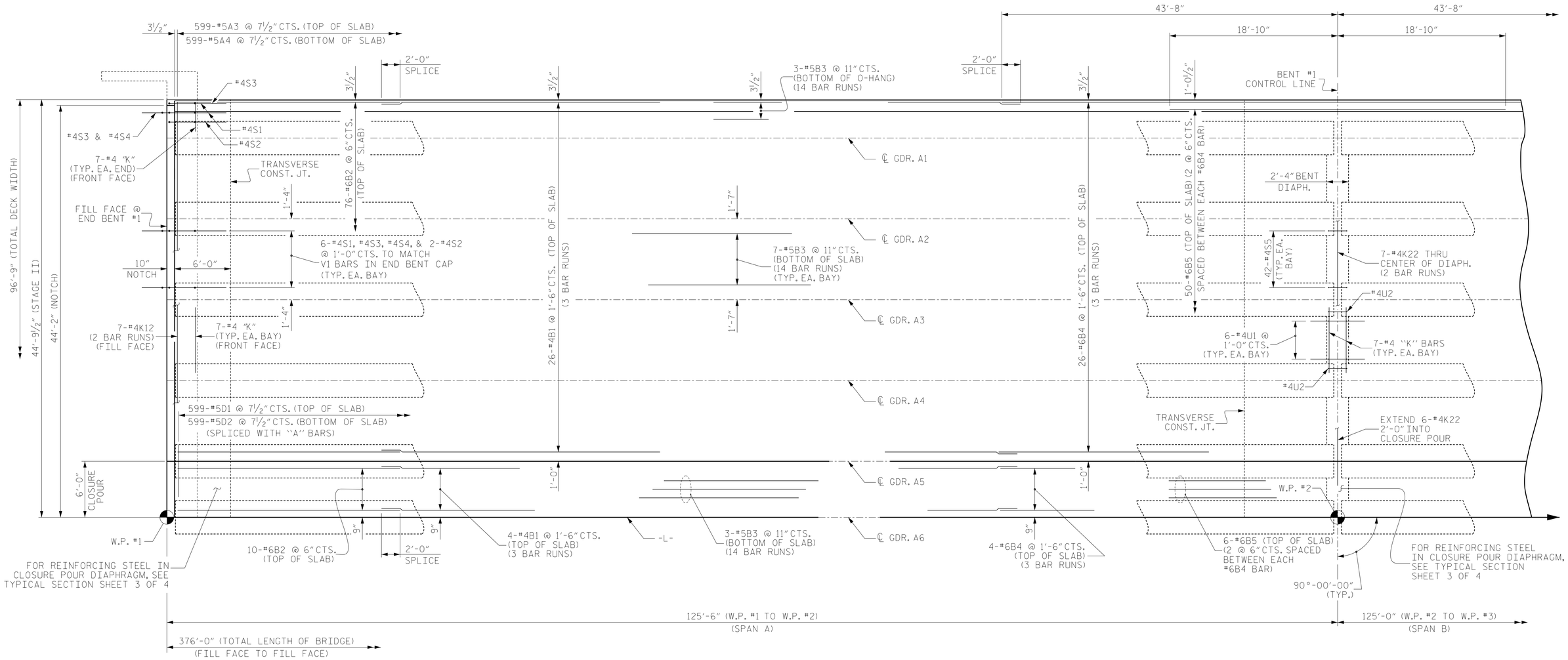

PLAN OF SPAN A

PROJECT NO. R-3825B

JOHNSTON COUNTY

STATION: 64+20.00 -L-

SHEET 4 OF 6

STATE OF NORTH CAROLINA
DEPARTMENT OF TRANSPORTATION
RALEIGH

SUPERSTRUCTURE

PLAN OF SPAN A
(STAGE II)

Vaughn & Melton
Consulting Engineers
Asheville, North Carolina
828-253-2796
Raleigh, NC 919-977-9455
Charlotte, NC 704-357-0488
Boone, NC 828-355-9933
Tri-Cities, TN 423-467-8401
Knoxville, TN 865-546-5800
Spartanburg, SC 864-574-4775
Charleston, SC 843-974-5650
Middlesboro, KY 606-248-6600
Atlanta, GA 770-627-3590

Copyright © 2006 Vaughn & Melton, Inc. All Rights Reserved

NORTH CAROLINA PROFESSIONAL ENGINEER SEAL HARDY L. WILLIS CC2017.0202.001
7/17/2018 9:03:43 AM EDT

DOCUMENT NOT CONSIDERED FINAL UNLESS ALL SIGNATURES COMPLETED

REVISIONS						
NO.	BY:	DATE:	NO.	BY:	DATE:	
1			3			
2			4			

SHEET NO. S-15
TOTAL SHEETS 59

DRAWN BY : WDC DATE : 7-2017
CHECKED BY : ACO DATE : 12-2017
DESIGN ENGINEER OF RECORD: ACO DATE : 12-2017

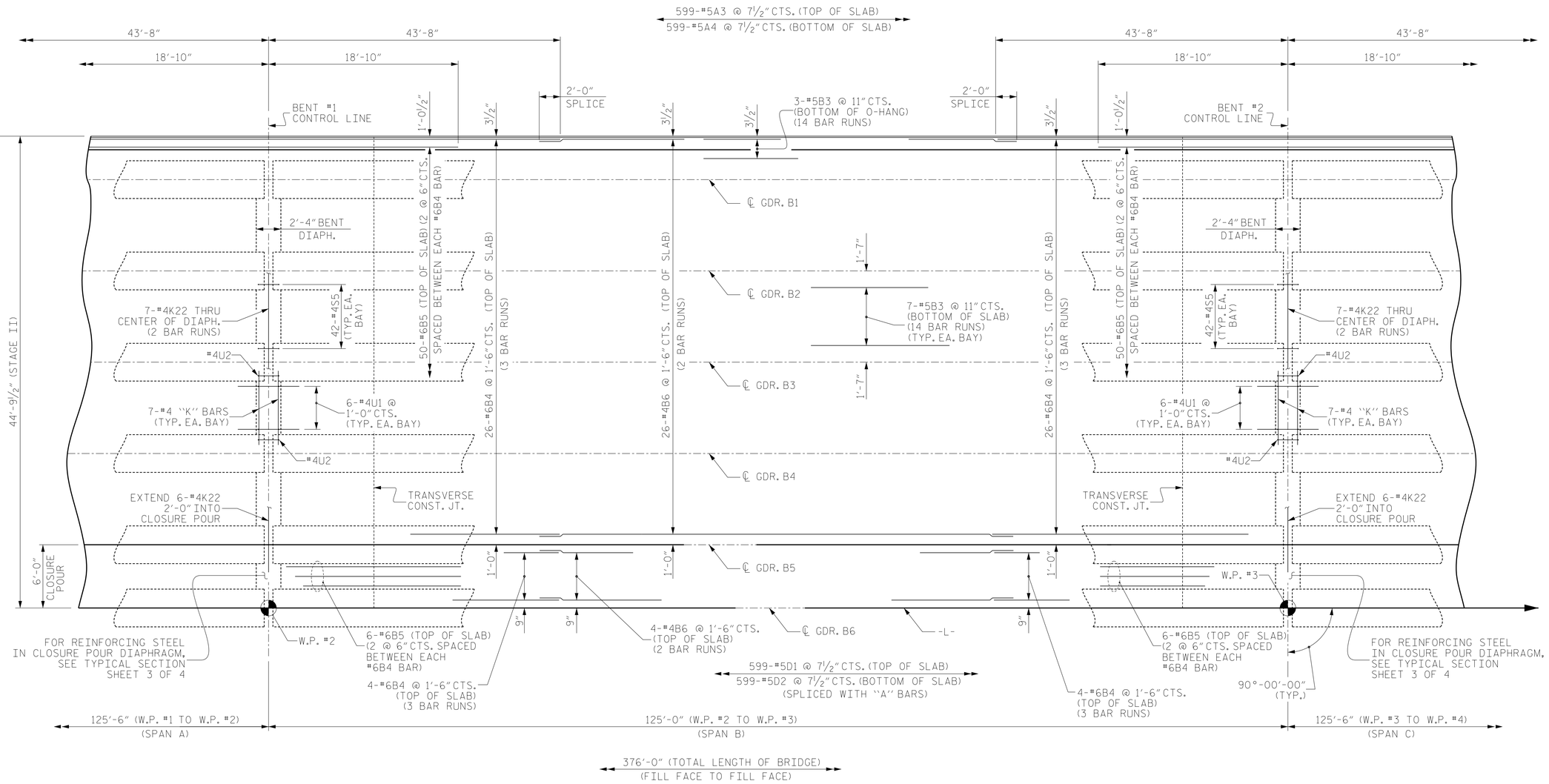

PLAN OF SPAN B

PROJECT NO. R-3825B

JOHNSTON COUNTY

STATION: 64+20.00 -L-

SHEET 5 OF 6

STATE OF NORTH CAROLINA
DEPARTMENT OF TRANSPORTATION
RALEIGH

SUPERSTRUCTURE

PLAN OF SPAN B
(STAGE II)

V&M
Vaughn & Melton
Consulting Engineers
Asheville, North Carolina
828-253-2796
Raleigh, NC 919-977-9455
Charlotte, NC 704-357-0488
Boone, NC 828-355-9933
Tri-Cities, TN 423-467-8401
Knoxville, TN 865-546-5800
Spartanburg, SC 864-574-4775
Charleston, SC 843-974-5650
Middlesboro, KY 606-248-6600
Atlanta, GA 770-627-3590

Copyright © 2006 Vaughn & Melton, Inc. All Rights Reserved

NORTH CAROLINA PROFESSIONAL SEAL ENGINEER HARDY L. WILLIS
7/17/2018 9:03:43 AM EDT

DOCUMENT NOT CONSIDERED FINAL UNLESS ALL SIGNATURES COMPLETED

REVISIONS							SHEET NO.
NO.	BY:	DATE:	NO.	BY:	DATE:		S-16
1			3				TOTAL SHEETS
2			4				59

DRAWN BY : WDC DATE : 7-2017
CHECKED BY : ACO DATE : 12-2017
DESIGN ENGINEER OF RECORD: ACO DATE : 12-2017

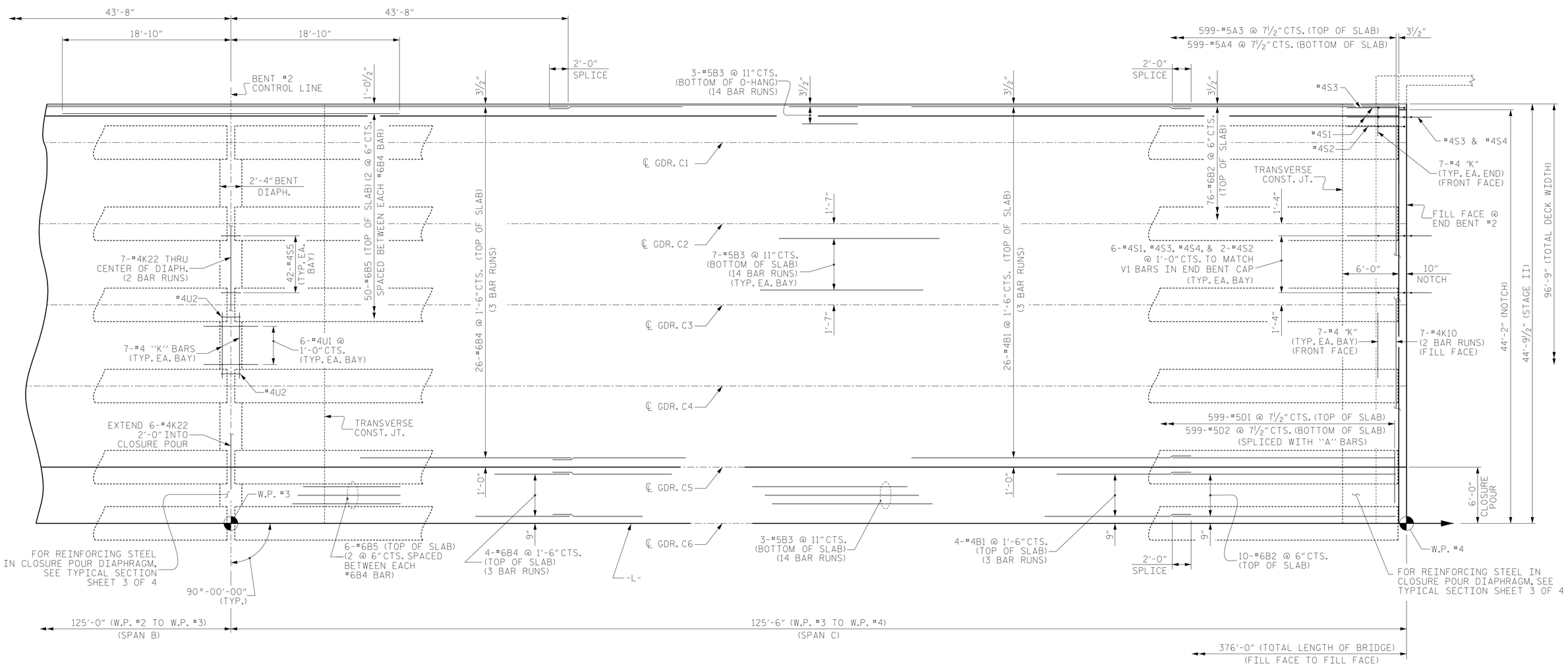

PLAN OF SPAN C

PROJECT NO. R-3825B

JOHNSTON COUNTY

STATION: 64+20.00 -L-

SHEET 6 OF 6

STATE OF NORTH CAROLINA
DEPARTMENT OF TRANSPORTATION
RALEIGH

SUPERSTRUCTURE

PLAN OF SPAN C
(STAGE II)

DRAWN BY : WDC DATE : 7-2017
CHECKED BY : ACO DATE : 12-2017
DESIGN ENGINEER OF RECORD: ACO DATE : 12-2017

V&M
Vaughn & Melton
Consulting Engineers
Asheville, North Carolina
828-253-2796
Raleigh, NC 919-977-9455
Charlotte, NC 704-357-0488
Boone, NC 828-355-9933
Tri-Cities, TN 423-467-8401
Knoxville, TN 865-546-5800
Spartanburg, SC 864-574-4775
Charleston, SC 843-974-5650
Middlesboro, KY 606-248-6600
Atlanta, GA 770-627-3590

Copyright © 2006 Vaughn & Melton, Inc. All Rights Reserved

NORTH CAROLINA PROFESSIONAL ENGINEER SEAL HARDY L. WILLIS
DocuSigned by: Hardy Willis
CC2B7C4D0025481...
7/17/2018 9:03:43 AM EDT

DOCUMENT NOT CONSIDERED FINAL UNLESS ALL SIGNATURES COMPLETED

REVISIONS						SHEET NO.
NO.	BY:	DATE:	NO.	BY:	DATE:	S-17
1			3			TOTAL SHEETS
2			4			59

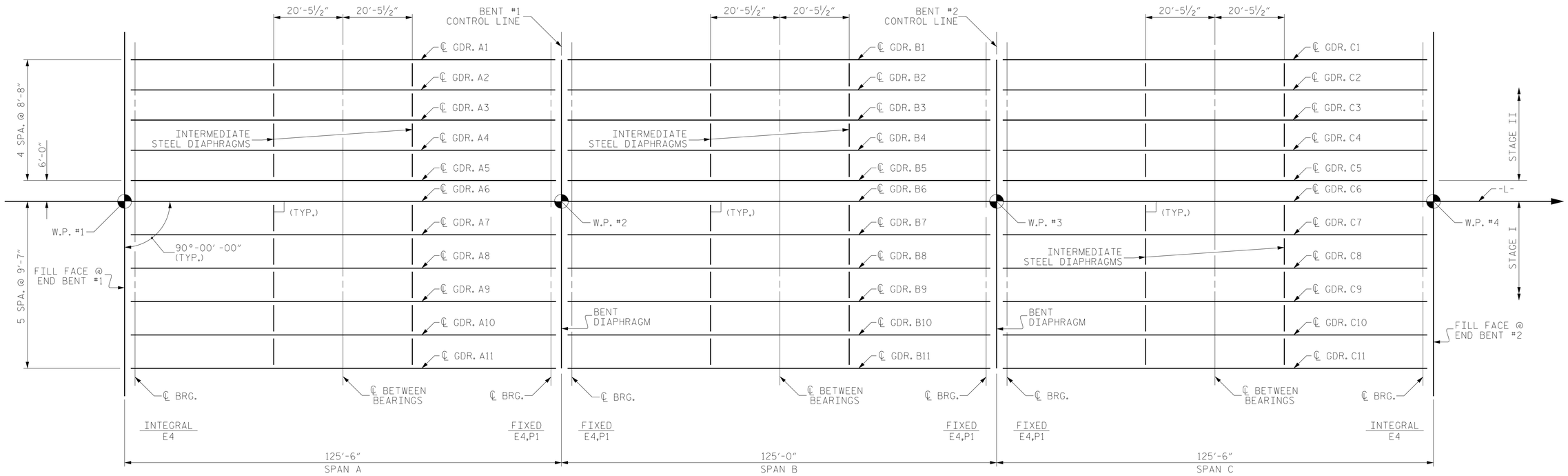

GIRDER LAYOUT

FOR INTERMEDIATE STEEL DIAPHRAGM DETAILS,
SEE "INTERMEDIATE STEEL DIAPHRAGMS FOR PRESTRESSED
CONCRETE GIRDERS" SHEET.

NORTH CAROLINA PROFESSIONAL ENGINEER SEAL 024772 HARDY L. WILLIS

7/17/2018 9:03:43 AM EDT

DOCUMENT NOT CONSIDERED
FINAL UNLESS ALL
SIGNATURES COMPLETED

PROJECT NO. R-3825B
JOHNSTON COUNTY
STATION: 64+20.00 -L-

V&M
Vaughn & Melton
Consulting Engineers
Asheville, North Carolina
828-253-2796
Raleigh, NC 919-977-9455
Charlotte, NC 704-357-0488
Boone, NC 828-355-9933
Tri-Cities, TN 423-467-8401
Knoxville, TN 865-546-5800
Spartanburg, SC 864-574-4775
Charleston, SC 843-974-5650
Middlesboro, KY 606-248-6600
Atlanta, GA 770-627-3590

Copyright © 2006 Vaughn & Melton, Inc. All Rights Reserved

STATE OF NORTH CAROLINA
DEPARTMENT OF TRANSPORTATION
RALEIGH

SUPERSTRUCTURE
GIRDER LAYOUT

REVISIONS						SHEET NO.
NO.	BY:	DATE:	NO.	BY:	DATE:	S-18
1			3			TOTAL SHEETS
2			4			59

DRAWN BY : WDC DATE : 7-2017
CHECKED BY : ACO DATE : 12-2017
DESIGN ENGINEER OF RECORD: ACO DATE : 12-2017

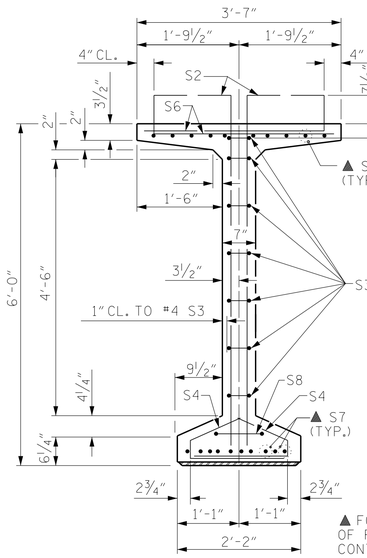

▲ FOR S7 BARS, SEE DETAIL "B" OF PRESTRESSED CONCRETE GIRDER CONTINUOUS FOR LIVE LOAD SHEET.

SECTION A-A

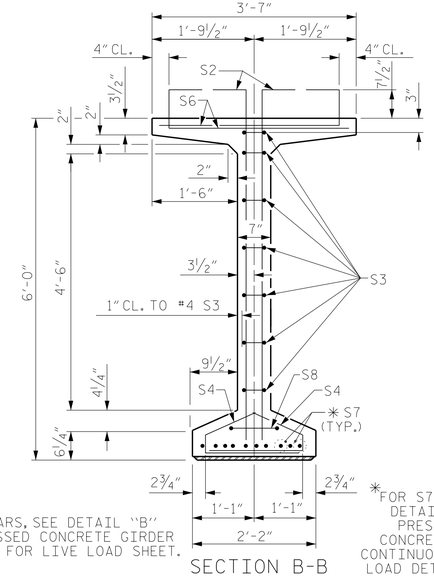

✱FOR S7 BARS. SEE DETAIL "C" OF PRESTRESSED CONCRETE GIRDER CONTINUOUS FOR LIVE LOAD DETAILS SHEET

SECTION B-B

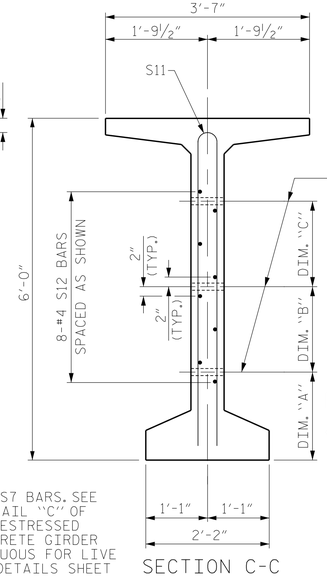

SECTION C-C

(S1, S6 AND S9 BARS NOT SHOWN)

DEBONDING LEGEND

- ● FULLY BONDED STRANDS
- ▣ STRANDS DEBONDED FOR 4'-0" FROM END OF GIRDER
- ⬢ STRANDS DEBONDED FOR 12'-0" FROM END OF GIRDER

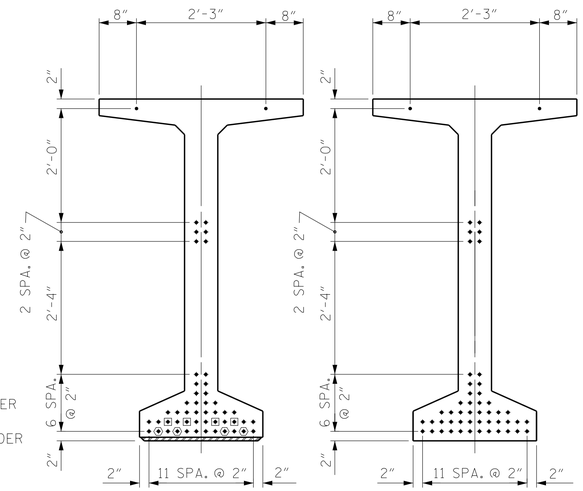

AT END OF GIRDER

AT ℄ OF GIRDER

0.6"Ø LOW RELAXATION STRAND LAYOUT

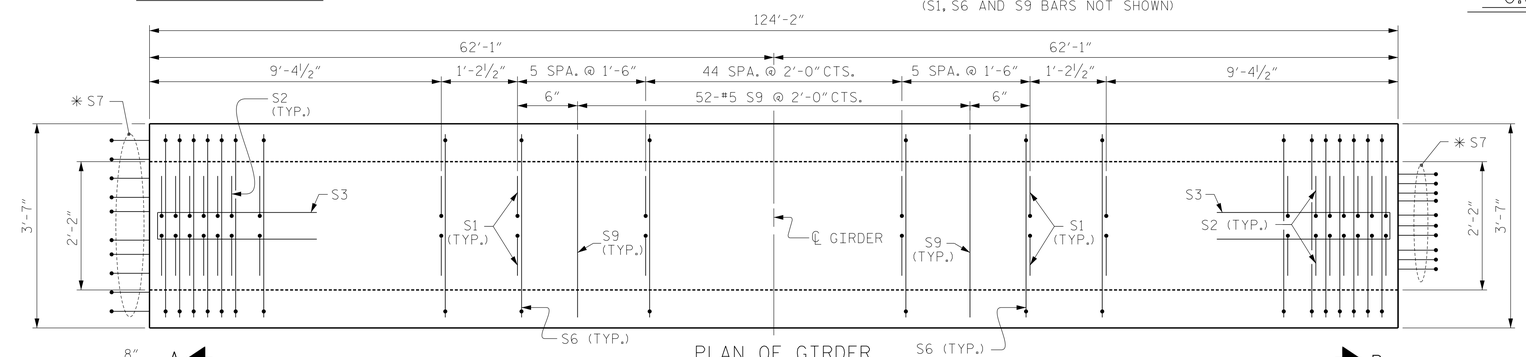

PLAN OF GIRDER

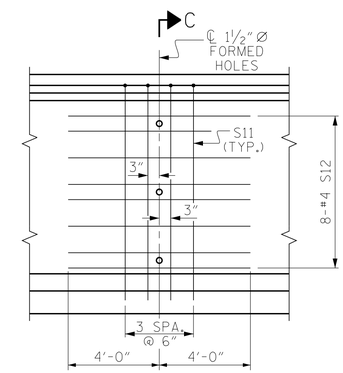

PARTIAL ELEVATION

SHOWING INTERMEDIATE STEEL DIAPHRAGM REINFORCING STEEL

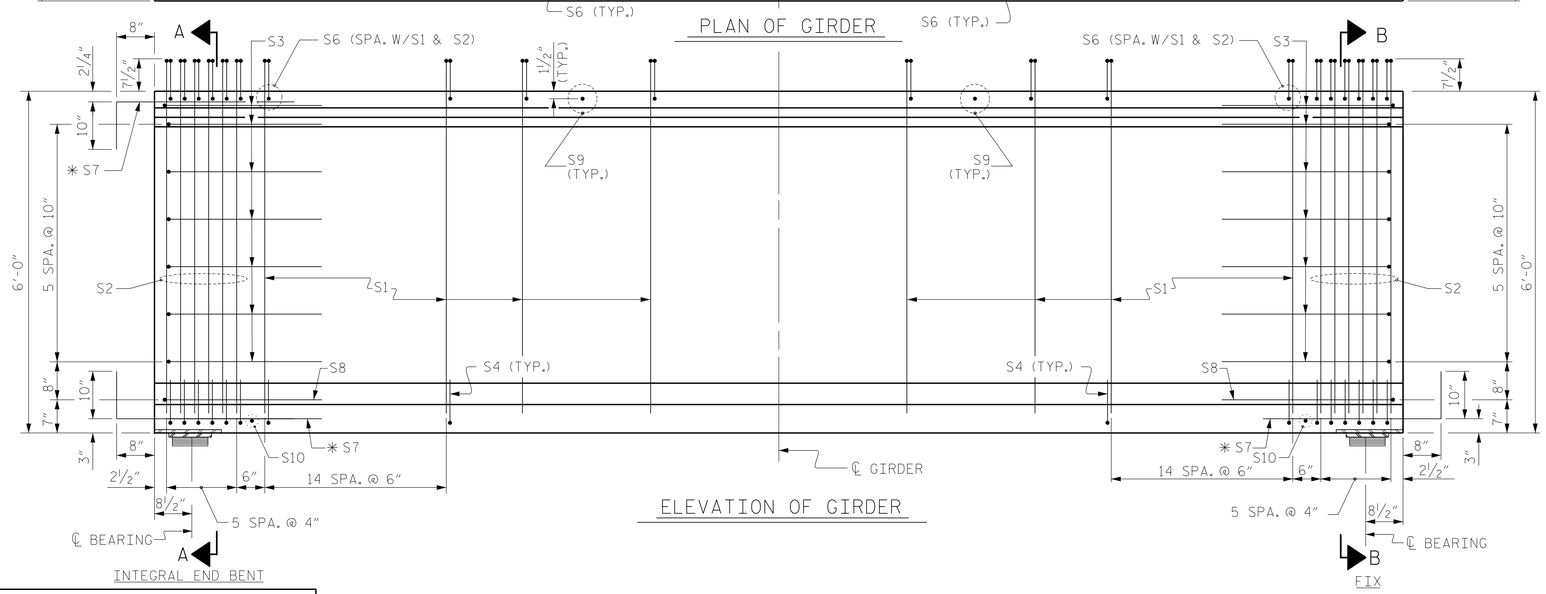

ELEVATION OF GIRDER

INTEGRAL END BENT

FIX

0.6"Ø L. R. GRADE 270 STRANDS		
AREA (SQUARE INCHES)	ULTIMATE STRENGTH (LBS. PER STRAND)	APPLIED PRESTRESS (LBS. PER STRAND)
0.217	58,600	43,950

REINFORCING STEEL FOR ONE GDR

BAR	NUMBER	SIZE	TYPE	LENGTH	WEIGHT
S1	170	#4	1	7'-0"	795
S2	24	#5	1	7'-0"	175
S3	14	#4	2	8'-5"	79
S4	84	#4	3	3'-0"	168
S6	194	#5	4	4'-5"	894
✱ S7	30	#5	STR	3'-8"	115
S8	2	#5	2	9'-0"	19
S9	52	#5	STR	3'-3"	176
S10	2	#3	STR	1'-10"	1
S11	8	#5	5	11'-6"	96
S12	16	#4	STR	8'-0"	86

✱ NOTE: S7 BARS SHALL BE BENT BEFORE SHIPMENT. HEAT BENDING SHALL NOT BE ALLOWED.

BAR TYPES

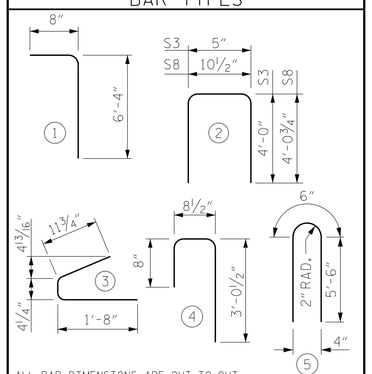

ALL BAR DIMENSIONS ARE OUT-TO-OUT

QUANTITIES FOR ONE GIRDER

	REINFORCING STEEL	10000 PSI CONCRETE	0.6"Ø L.R. STRANDS
	LB.	C.Y.	No.
	2604	26.6	50

GIRDERS REQUIRED

NUMBER	LENGTH	TOTAL LENGTH
11	124'-2"	1365'-10"

SEAL 047844 NORTH CAROLINA PROFESSIONAL ENGINEER HARDY L. WILLIS

7/17/2018 9:03:43 AM EDT

DOCUMENT NOT CONSIDERED FINAL UNLESS ALL SIGNATURES COMPLETED

V&M Vaughn & Melton Consulting Engineers
Asheville, North Carolina 828-253-2796
Raleigh, NC 919-977-9455 · Charlotte, NC 704-357-0488
Boone, NC 828-355-9933 · Tri-Cities, TN 423-467-8401 · Knoxville, TN 865-546-5800 · Spartanburg, SC 864-574-4775 · Charleston, SC 843-974-5650 · Middlesboro, KY 606-248-6600 · Atlanta, GA 770-627-3590

Copyright © 2006 Vaughn & Melton, Inc. All Rights Reserved

PROJECT NO. R-3825B
JOHNSTON COUNTY
STATION: 64+20.00 -L-

SHEET 1 OF 4

STATE OF NORTH CAROLINA
DEPARTMENT OF TRANSPORTATION
RALEIGH

STANDARD
72" PRESTRESSED CONCRETE MODIFIED BULB TEE CONTINUOUS FOR LIVE LOAD SPAN 'A'

REVISIONS						SHEET NO.
NO.	BY:	DATE:	NO.	BY:	DATE:	S-19
1			3			TOTAL SHEETS
2			4			59

ASSEMBLED BY :	WDC	DATE :	7/2017
CHECKED BY :	ACO	DATE :	12/2017
DRAWN BY :	EEM 2/6/97	REV. 10/1/11	MAA/GM
CHECKED BY :	VAP 2/6/97	REV. 6/13	MAA/GM
		REV. 1/15	MAA/TMG

STD. NO. PCG8

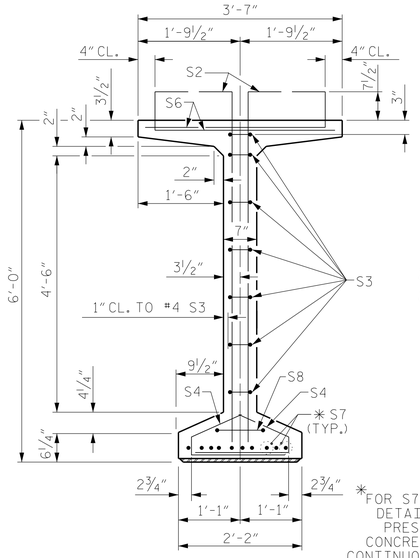

SECTION B-B

*FOR S7 BARS. SEE DETAIL "C" OF PRESTRESSED CONCRETE GIRDER CONTINUOUS FOR LIVE LOAD DETAILS SHEET

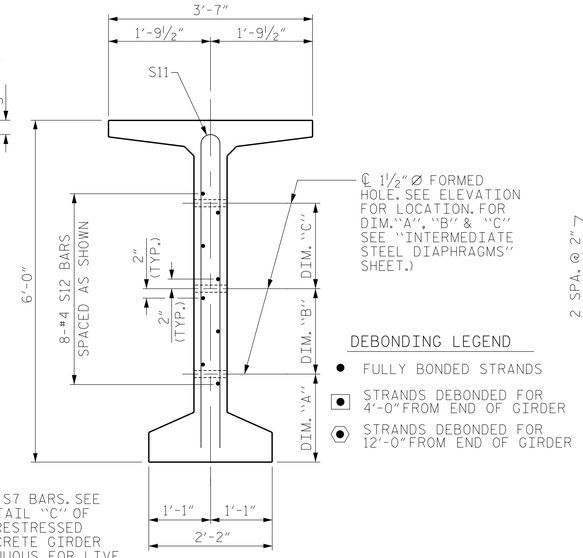

SECTION C-C

(S1, S6 AND S9 BARS NOT SHOWN)

DEBONDING LEGEND

- ● FULLY BONDED STRANDS
- ▣ STRANDS DEBONDED FOR 4'-0" FROM END OF GIRDER
- ⬢ STRANDS DEBONDED FOR 12'-0" FROM END OF GIRDER

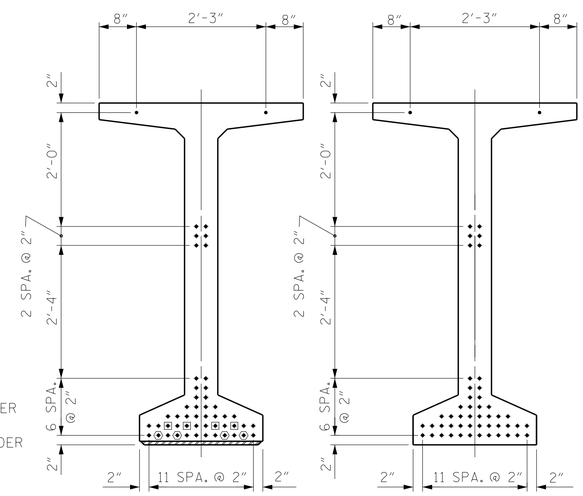

AT END OF GIRDER

AT ℄ OF GIRDER

0.6" Ø LOW RELAXATION STRAND LAYOUT

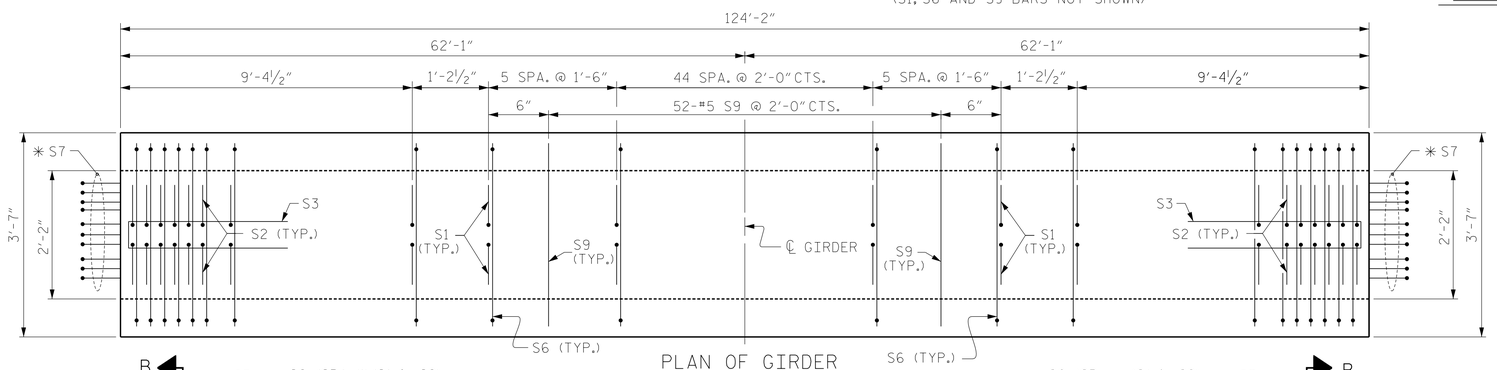

PLAN OF GIRDER

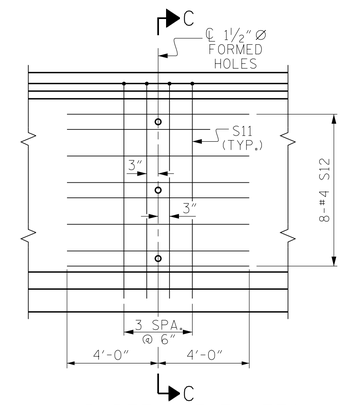

PARTIAL ELEVATION

SHOWING INTERMEDIATE STEEL DIAPHRAGM REINFORCING STEEL FOR GIRDERS

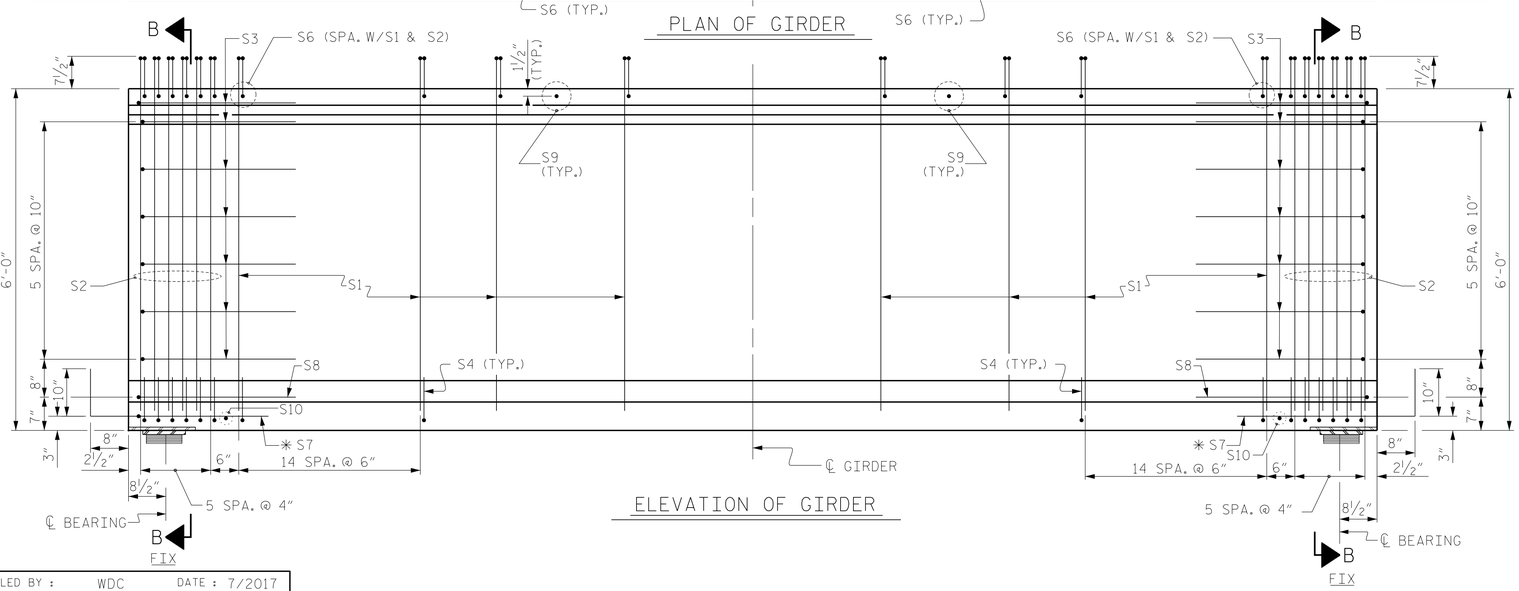

ELEVATION OF GIRDER

0.6" Ø L. R. GRADE 270 STRANDS		
AREA (SQUARE INCHES)	ULTIMATE STRENGTH (LBS. PER STRAND)	APPLIED PRESTRESS (LBS. PER STRAND)
0.217	58,600	43,950

REINFORCING STEEL FOR ONE GDR

BAR	NUMBER	SIZE	TYPE	LENGTH	WEIGHT
S1	170	#4	1	7'-0"	795
S2	24	#5	1	7'-0"	175
S3	14	#4	2	8'-5"	79
S4	84	#4	3	3'-0"	168
S6	194	#5	4	4'-5"	894
* S7	20	#5	STR	3'-8"	76
S8	2	#5	2	9'-0"	19
S9	52	#5	STR	3'-3"	176
S10	2	#3	STR	1'-10"	1
S11	8	#5	5	11'-6"	96
S12	16	#4	STR	8'-0"	86

* NOTE: S7 BARS SHALL BE BENT BEFORE SHIPMENT. HEAT BENDING SHALL NOT BE ALLOWED.

BAR TYPES

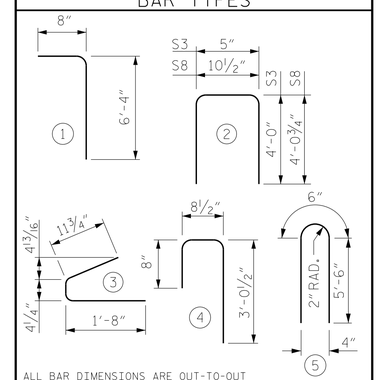

ALL BAR DIMENSIONS ARE OUT-TO-OUT

QUANTITIES FOR ONE GIRDER

	REINFORCING STEEL	10000 PSI CONCRETE	0.6" Ø L.R. STRANDS
	LB.	C.Y.	No.
	2565	26.6	50

GIRDERS REQUIRED

NUMBER	LENGTH	TOTAL LENGTH
11	124'-2"	1365'-10"

NORTH CAROLINA PROFESSIONAL SEAL ENGINEER HARDY L. WILLIS

Authorized by: Hardy L. Willis 2017

7/17/2018 9:03:43 AM EDT

DOCUMENT NOT CONSIDERED FINAL UNLESS ALL SIGNATURES COMPLETED

PROJECT NO. R-3825B

JOHNSTON COUNTY

STATION: 64+20.00 -L-

SHEET 2 OF 4

STATE OF NORTH CAROLINA
DEPARTMENT OF TRANSPORTATION
RALEIGH

STANDARD
72" PRESTRESSED CONCRETE MODIFIED BULB TEE CONTINUOUS FOR LIVE LOAD SPAN 'B'

V&M Vaughn & Melton Consulting Engineers
Asheville, North Carolina 828-253-2796
Raleigh, NC 919-977-9455
Charlotte, NC 704-357-0488
Boone, NC 828-355-9933
Tri-Cities, TN 423-467-8401
Knoxville, TN 865-546-5800
Spartanburg, SC 864-574-4775
Charleston, SC 843-974-5650
Middlesboro, KY 606-248-6600
Atlanta, GA 770-627-3590

Copyright © 2006 Vaughn & Melton, Inc. All Rights Reserved

ASSEMBLED BY : WDC	DATE : 7/2017
CHECKED BY : ACO	DATE : 12/2017
DRAWN BY : EEM 2/6/97	REV. 10/1/11 MAA/GM
CHECKED BY : VAP 2/6/97	REV. 6/13 MAA/GM
	REV. 1/15 MAA/TMG

REVISIONS						SHEET NO.
NO.	BY:	DATE:	NO.	BY:	DATE:	S-20
1			3			TOTAL SHEETS
2			4			59

STD. NO. PCG8

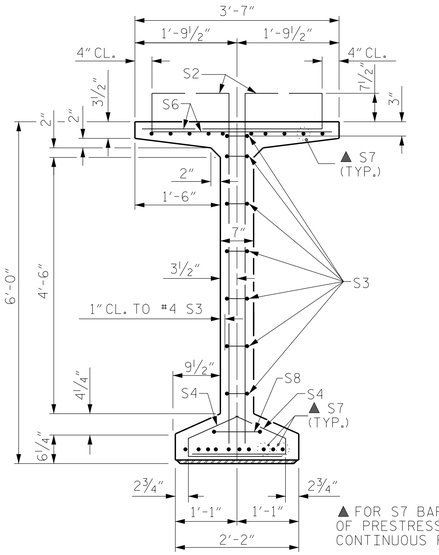

▲ FOR S7 BARS, SEE DETAIL "B" OF PRESTRESSED CONCRETE GIRDER CONTINUOUS FOR LIVE LOAD SHEET.

SECTION A-A

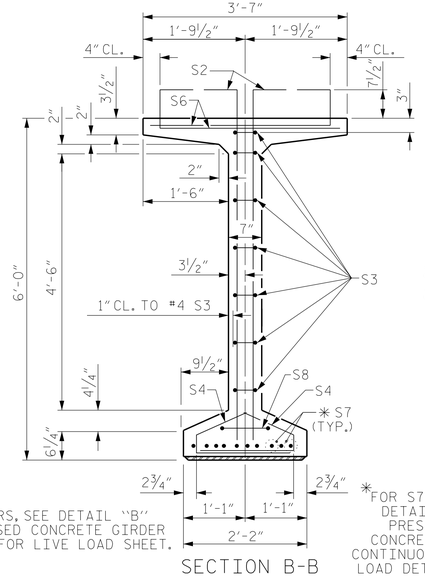

✱ FOR S7 BARS, SEE DETAIL "C" OF PRESTRESSED CONCRETE GIRDER CONTINUOUS FOR LIVE LOAD DETAILS SHEET

SECTION B-B

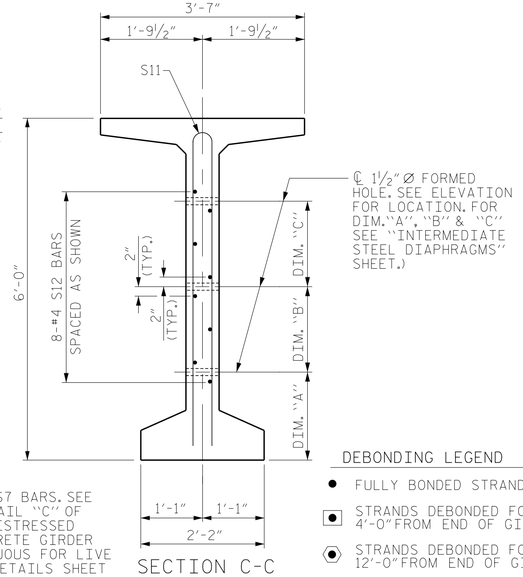

SECTION C-C

(S1, S6 AND S9 BARS NOT SHOWN)

DEBONDING LEGEND

- ● FULLY BONDED STRANDS
- ⊡ STRANDS DEBONDED FOR 4'-0" FROM END OF GIRDER
- ⬡ STRANDS DEBONDED FOR 12'-0" FROM END OF GIRDER

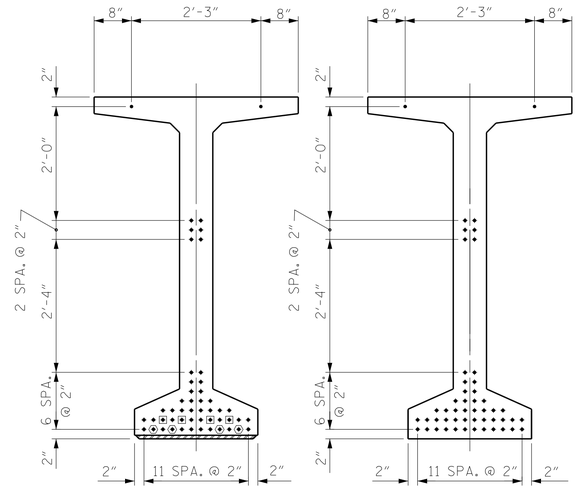

AT END OF GIRDER

AT ℄ OF GIRDER

0.6" Ø LOW RELAXATION STRAND LAYOUT

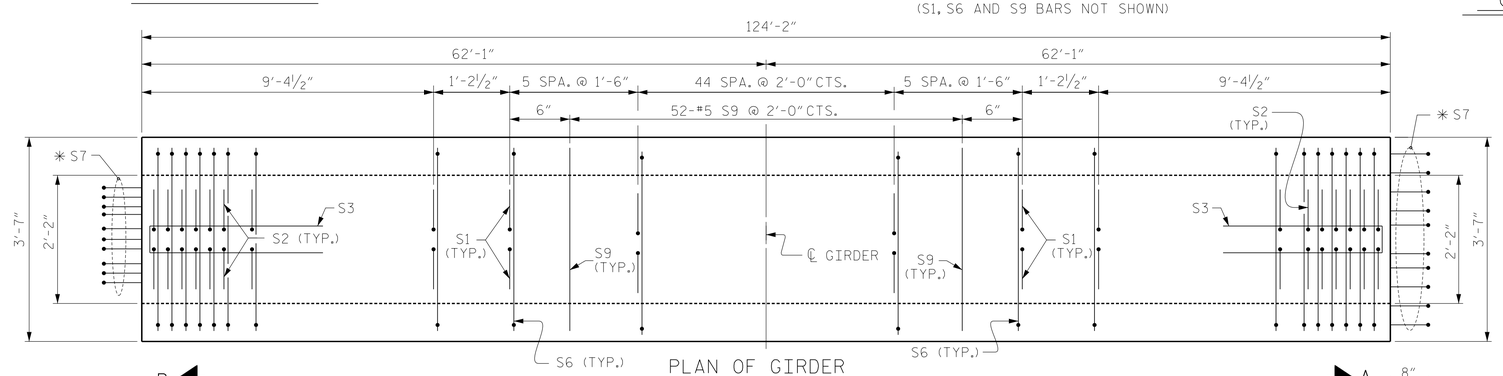

PLAN OF GIRDER

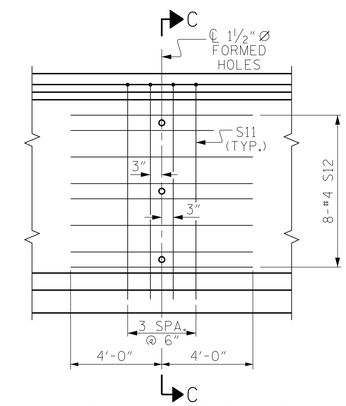

PARTIAL ELEVATION

SHOWING INTERMEDIATE STEEL DIAPHRAGM REINFORCING STEEL FOR GIRDERS

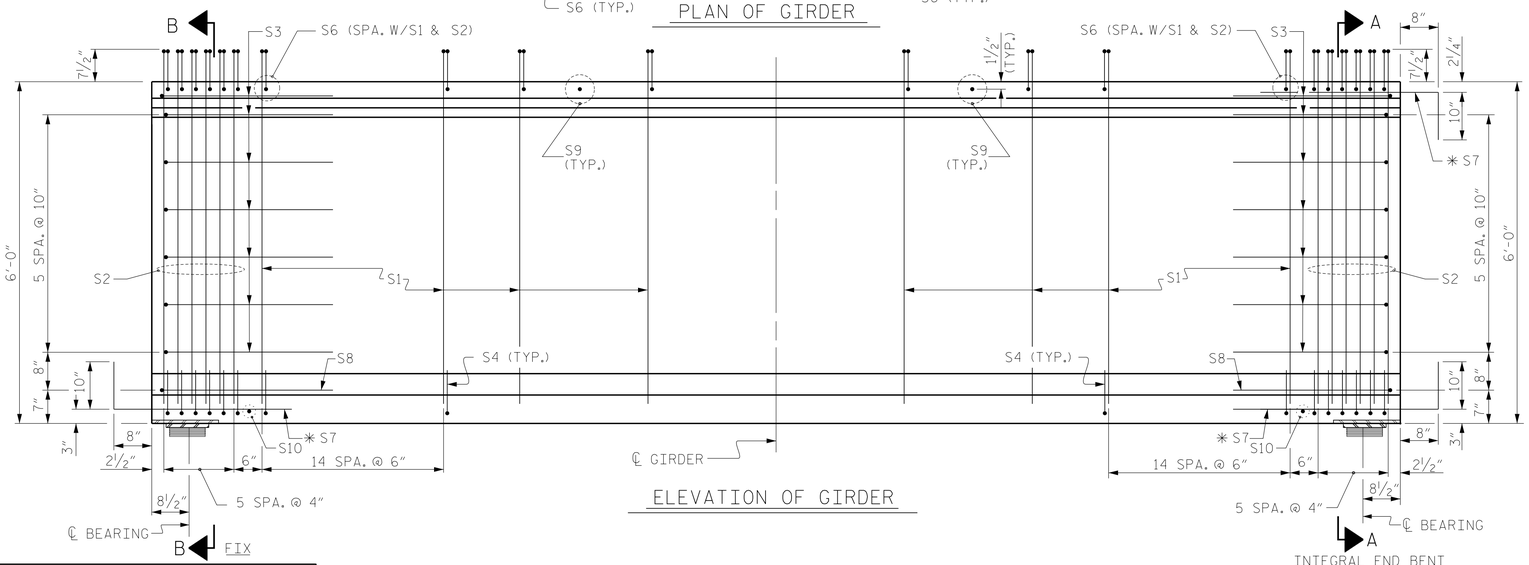

ELEVATION OF GIRDER

0.6" Ø L. R. GRADE 270 STRANDS		
AREA (SQUARE INCHES)	ULTIMATE STRENGTH (LBS. PER STRAND)	APPLIED PRESTRESS (LBS. PER STRAND)
0.217	58,600	43,950

REINFORCING STEEL FOR ONE GDR

BAR	NUMBER	SIZE	TYPE	LENGTH	WEIGHT
S1	170	#4	1	7'-0"	795
S2	24	#5	1	7'-0"	175
S3	14	#4	2	8'-5"	79
S4	84	#4	3	3'-0"	168
S6	194	#5	4	4'-5"	894
✱ S7	30	#5	STR	3'-8"	115
S8	2	#5	2	9'-0"	19
S9	52	#5	STR	3'-3"	176
S10	2	#3	STR	1'-10"	1
S11	8	#5	5	11'-6"	96
S12	16	#4	STR	8'-0"	86

✱ NOTE: S7 BARS SHALL BE BENT BEFORE SHIPMENT. HEAT BENDING SHALL NOT BE ALLOWED.

BAR TYPES

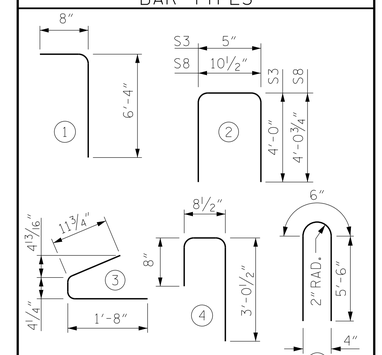

ALL BAR DIMENSIONS ARE OUT-TO-OUT

QUANTITIES FOR ONE GIRDER

	REINFORCING STEEL	10000 PSI CONCRETE	0.6" Ø L.R. STRANDS
	LB.	C.Y.	No.
	2604	26.6	50

GIRDERS REQUIRED

NUMBER	LENGTH	TOTAL LENGTH
11	124'-2"	1365'-10"

NORTH CAROLINA PROFESSIONAL ENGINEER SEAL 26471 HARDY L. WILLIS

DocuSigned by: Hardy Willis 2B4AFF7F4A4C4A0... CC287FCDF0C4C0...

7/17/2018 9:13:46 AM EDT

DOCUMENT NOT CONSIDERED FINAL UNLESS ALL SIGNATURES COMPLETED

PROJECT NO. R-3825B

JOHNSTON COUNTY

STATION: 64+20.00 -L-

SHEET 3 OF 4

STATE OF NORTH CAROLINA
DEPARTMENT OF TRANSPORTATION
RALEIGH

STANDARD
72" PRESTRESSED CONCRETE MODIFIED BULB TEE CONTINUOUS FOR LIVE LOAD SPAN 'C'

V&M Vaughn & Melton Consulting Engineers
Asheville, North Carolina
828-253-2796

- Boone, NC 828-355-9933
- Tri-Cities, TN 423-467-8401
- Knoxville, TN 865-546-5800
- Spartanburg, SC 864-574-4775
- Charleston, SC 843-974-5650
- Middlesboro, KY 606-248-6600
- Atlanta, GA 770-627-3590
- ■ Raleigh, NC 919-977-9455
- Charlotte, NC 704-357-0488

Copyright © 2006 Vaughn & Melton, Inc. All Rights Reserved

ASSEMBLED BY : WDC	DATE : 7/2017
CHECKED BY : ACO	DATE : 12/2017

DRAWN BY : EEM 2/6/97	REV. 10/1/11	MAA/GM
CHECKED BY : VAP 2/6/97	REV. 6/13	MAA/GM
	REV. 1/15	MAA/TMG

REVISIONS						SHEET NO.
NO.	BY:	DATE:	NO.	BY:	DATE:	S-21
1			3			TOTAL SHEETS
2			4			59

STD. NO. PCG8

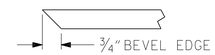

SECTION "F"

(SEE NOTES)

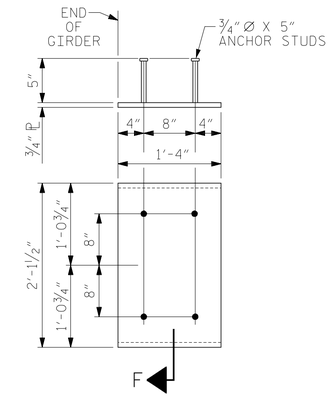

EMBEDDED PLATE "B-1" DETAILS FOR 72" MODIFIED BULB TEES

(2 REQ'D PER GIRDER)

NOTES

ALL PRESTRESSING STRANDS SHALL BE 7-WIRE LOW-RELAXATION GRADE 270 STRANDS AND SHALL CONFORM TO AASHTO M203 EXCEPT FOR SAMPLING REQUIREMENTS WHICH SHALL BE IN ACCORDANCE WITH THE STANDARD SPECIFICATIONS.

ALL REINFORCING STEEL SHALL BE GRADE 60.

EMBEDDED PLATE "B-1" SHALL BE GALVANIZED IN ACCORDANCE WITH THE STANDARD SPECIFICATIONS.

ANCHOR STUDS SHALL CONFORM TO AASHTO M169 GRADES 1010 THROUGH 1020 OR APPROVED EQUAL, AND SHALL MEET THE TYPE "B" REQUIREMENTS OF SUBSECTION 7.3 OF THE ANSI/AASHTO/AWS D1.5 BRIDGE WELDING CODE.

AT ENDS OF GIRDERS TO BE EMBEDDED IN CONCRETE DIAPHRAGMS OR END WALLS, PRESTRESSING STRANDS MAY EXTEND A MAXIMUM OF 2" BEYOND THE GIRDER ENDS. OTHERWISE, PRESTRESSING STRANDS SHALL BE CUT FLUSH WITH THE GIRDER ENDS.

THE TRANSFER OF LOAD FROM THE ANCHORAGES TO THE GIRDER SHALL BE DONE WHEN CONCRETE HAS REACHED A COMPRESSIVE STRENGTH OF NOT LESS THAN 8000 PSI.

DEPENDING ON THE TYPE OF SYSTEM USED TO SUPPORT THE DECK SLAB FORMS, PRESET ANCHORS MAY BE NECESSARY IN THE PRESTRESSED CONCRETE GIRDER.

THE TOP SURFACE OF THE GIRDER, EXCLUDING THE OUTSIDE 4", SHALL BE RAKED TO A DEPTH OF 1/4".

A 2" x 2" CHAMFER IS ALLOWED AT THE INTERSECTION OF THE WEB AND THE BOTTOM FLANGE OF THE 72" MODIFIED BULB TEES.

THE CONTRACTOR HAS THE OPTION TO PROVIDE, AT NO ADDITIONAL COST TO THE DEPARTMENT, 2 ADDITIONAL STRANDS AT THE TOP OF THE GIRDER TO FACILITATE TYING OF THE REINFORCING STEEL. THESE STRANDS SHALL BE PULLED TO A LOAD OF 4500 lbs.

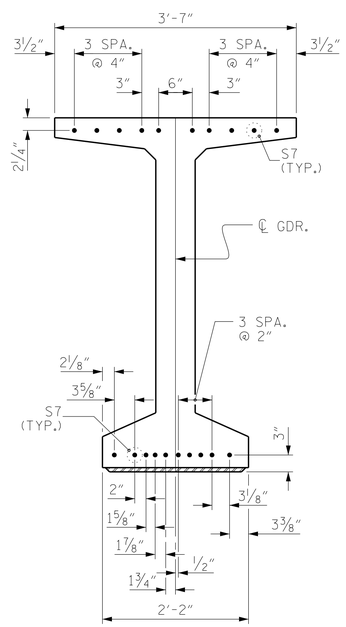

DETAIL "B"

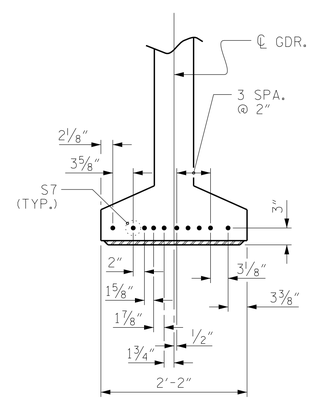

DETAIL "C"

NORTH CAROLINA PROFESSIONAL SEAL 20777 ENGINEER HARDY L. WILLIS

7/17/2018 9:13:46 AM EDT

DOCUMENT NOT CONSIDERED FINAL UNLESS ALL SIGNATURES COMPLETED

PROJECT NO. R-3825B

JOHNSTON COUNTY

STATION: 64+20.00 -L-

SHEET 4 OF 4

STATE OF NORTH CAROLINA
DEPARTMENT OF TRANSPORTATION
RALEIGH

STANDARD

PRESTRESSED CONCRETE GIRDER CONTINUOUS FOR LIVE LOAD DETAILS

V&M
Vaughn & Melton
Consulting Engineers
Asheville, North Carolina
828-253-2796
Raleigh, NC 919-977-9455
Charlotte, NC 704-357-0488
Boone, NC 828-355-9933
Tri-Cities, TN 423-467-8401
Knoxville, TN 865-546-5800
Spartanburg, SC 864-574-4775
Charleston, SC 843-974-5650
Middlesboro, KY 606-248-6600
Atlanta, GA 770-627-3590

Copyright © 2006 Vaughn & Melton, Inc. All Rights Reserved

ASSEMBLED BY : WDC	DATE : 7-2017
CHECKED BY : ACO	DATE : 12-2017
DRAWN BY : ELR 11/91	REV. 10/1/11 MAA/GM
CHECKED BY : GRP 11/91	REV. 1/15 MAA/TMG
	REV. 2/15 MAA/TMG

REVISIONS						SHEET NO.
NO.	BY:	DATE:	NO.	BY:	DATE:	S-22
1			3			TOTAL SHEETS
2			4			59

STD. NO. PCG9

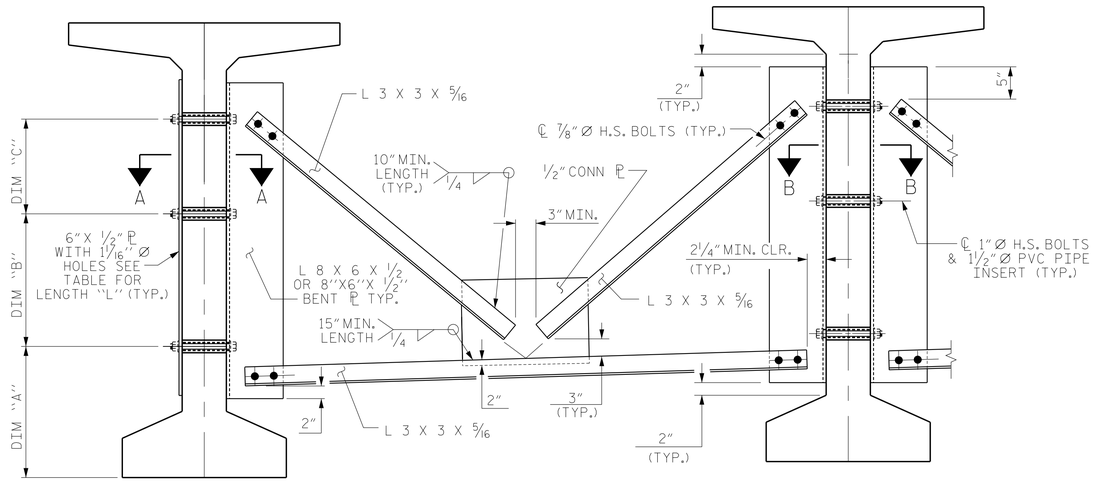

EXTERIOR GIRDER

INTERIOR GIRDER

PART SECTION AT INTERMEDIATE DIAPHRAGM

(72" BULB TEE GIRDER SHOWN)

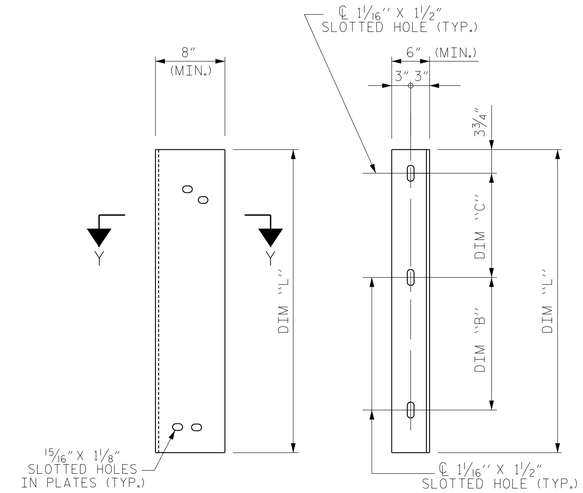

DIAPHRAGM FACE

WEB FACE

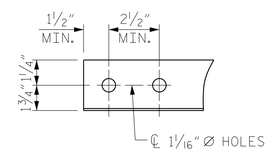

ANGLE END

(L 3 X 3 X 5/16)

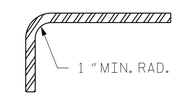

SECTION Y-Y

CONNECTOR PLATE DETAIL

STRUCTURAL STEEL NOTES

ALL INTERMEDIATE DIAPHRAGM STEEL AND CONNECTOR PLATES SHALL BE AASHTO M270 GRADE 50 OR APPROVED EQUAL.

TENSION ON THE ASTM A325 BOLTS THROUGH THE ANGLE MEMBER SHALL BE CALIBRATED USING DIRECT TENSION INDICATOR WASHERS IN ACCORDANCE WITH THE STANDARD SPECIFICATIONS.

TENSION ON THE ASTM A449 BOLTS THROUGH THE GIRDER WEB SHALL BE SNUG TIGHTENED FOLLOWED BY AN ADDITIONAL 1/4 TURN.

THE PLATES, BENT PLATES, AND ANGLES SHALL BE GALVANIZED OR METALLIZED IN ACCORDANCE WITH THE STANDARD SPECIFICATIONS. FOR THERMAL SPRAYED COATINGS (METALLIZATION), SEE SPECIAL PROVISIONS.

FOR METALLIZATION, APPLY AN 8 MIL THICK 99.99 PERCENT ZINC (W-Zn-1) THERMAL SPRAYED COATING WITH A 0.5 MIL THICK SEAL COAT TO ALL STEEL DIAPHRAGM SURFACES IN ACCORDANCE WITH THE THERMAL SPRAYED COATINGS SPECIAL PROVISION AND SECTION 442 OF THE STANDARD SPECIFICATIONS.

GALVANIZE THE HIGH STRENGTH BOLTS, NUTS, WASHERS AND DIRECT TENSION INDICATORS IN ACCORDANCE WITH THE STANDARD SPECIFICATIONS.

USE AN ASTM F436 HARDENED WASHER WITH STANDARD AND SLOTTED HOLES UNDER EACH BOLT HEAD AND NUT.

FOR BOLTS THROUGH THE GIRDER WEB, PROVIDE SUFFICIENT LENGTH OF THREADS ON ALL BOLTS TO ACCOMMODATE WASHERS AND THE THICKNESS OF CONNECTING MEMBER PLUS AT LEAST 1/4" PROJECTION BEYOND THE NUT.

INTERMEDIATE DIAPHRAGM ASSEMBLY SHALL COMPLY WITH SECTION 1072 OF THE STANDARD SPECIFICATIONS.

SUBMIT TWO SETS OF WORKING DRAWINGS FOR THE INTERMEDIATE DIAPHRAGM ASSEMBLY FOR REVIEW, COMMENTS AND ACCEPTANCE. AFTER REVIEW, COMMENTS, AND ACCEPTANCE, SUBMIT SEVEN SETS FOR DISTRIBUTION.

IN THE EXTERIOR BAYS, PLACE TEMPORARY STRUTS BETWEEN PRESTRESSED GIRDERS ADJACENT TO THE STEEL DIAPHRAGMS. STRUTS SHALL REMAIN IN PLACE 3 DAYS AFTER CONCRETE IS PLACED.

THE COST OF THE STEEL DIAPHRAGMS AND ASSEMBLIES SHALL BE INCLUDED IN THE UNIT PRICE BID FOR PRESTRESSED CONCRETE GIRDERS.

TABLE

GIRDER TYPE	DIM "A"	DIM "B"	DIM "C"	DIM "L"
72" BULB TEE	1'-8 1/2"	1'-6"	1'-8 1/4"	4'-2"

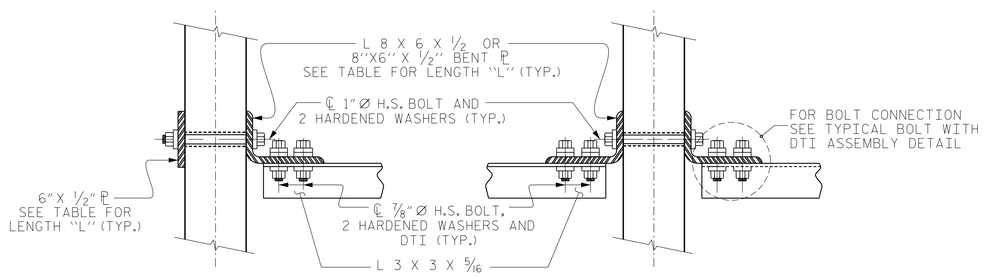

SECTION A-A

SECTION B-B

CONNECTION DETAILS

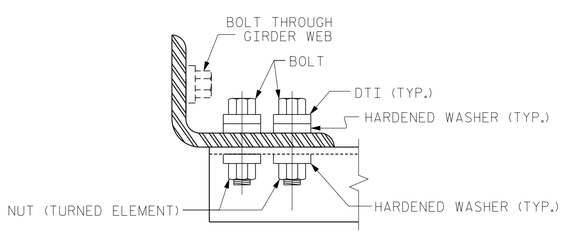

BOLT WITH DTI ASSEMBLY DETAIL

NORTH CAROLINA PROFESSIONAL SEAL & ENGINEER HARDY L. WILLIS

7/17/2018 9:13:46 AM EDT

DOCUMENT NOT CONSIDERED FINAL UNLESS ALL SIGNATURES COMPLETED

PROJECT NO. R-3825B

JOHNSTON COUNTY

STATION: 64+20.00 -L-

STATE OF NORTH CAROLINA
DEPARTMENT OF TRANSPORTATION
RALEIGH

STANDARD

INTERMEDIATE STEEL DIAPHRAGMS 72" MODIFIED BULB TEE PRESTRESSED CONCRETE GIRDERS

REVISIONS						SHEET NO.
NO.	BY:	DATE:	NO.	BY:	DATE:	S-23
1			3			TOTAL SHEETS
2			4			59

STD. NO. PCG11

V&M
Vaughn & Melton
Consulting Engineers
Asheville, North Carolina
828 253 2796
Raleigh, NC 919-977-9455
Charlotte, NC 704-357-0488
Boone, NC 828-355-9933
Tri-Cities, TN 423-467-8401
Knoxville, TN 865-546-5800
Spartanburg, SC 864-574-4775
Charleston, SC 843-974-5650
Middlesboro, KY 606-248-6600
Atlanta, GA 770-627-3590

Copyright © 2006 Vaughn & Melton, Inc. All Rights Reserved

ASSEMBLED BY : WDC	DATE : 7-2017
CHECKED BY : ACO	DATE : 12-2017
DRAWN BY : RWW 11/09	ADDED 11/23/09R
CHECKED BY : GM 11/09	REV. 10/1/11 MAA/GM

DEAD LOAD DEFLECTION TABLE FOR GIRDERS

0.6"Ø LOW RELAXATION	GIRDER A1, B1, C1																				
	BRG.	0.05	0.1	0.15	0.2	0.25	0.3	0.35	0.4	0.45	0.5	0.55	0.6	0.65	0.7	0.75	0.8	0.85	0.90	0.95	BRG.
CAMBER (GIRDER IN PLACE) ↑	0	0.051	0.101	0.148	0.190	0.229	0.261	0.287	0.305	0.317	0.321	0.317	0.305	0.287	0.261	0.229	0.190	0.148	0.101	0.051	0
✳ DEFLECTION DUE TO SUPERIMPOSED D.L. ↓	0	0.026	0.053	0.080	0.105	0.125	0.140	0.151	0.159	0.167	0.176	0.167	0.159	0.151	0.140	0.125	0.105	0.080	0.053	0.026	0
FINAL CAMBER ↑	0	5/16"	9/16"	13/16"	1"	1 1/4"	1 7/16"	1 5/8"	1 13/16"	1 13/16"	1 13/16"	1 13/16"	1 13/16"	1 5/8"	1 7/16"	1 1/4"	1"	13/16"	9/16"	5/16"	0

✳ INCLUDES FUTURE WEARING SURFACE.
ALL VALUES ARE SHOWN IN FEET (DECIMAL FORM), EXCEPT "FINAL CAMBER", WHICH IS GIVEN IN INCHES (FRACTION FORM).

DEAD LOAD DEFLECTION TABLE FOR GIRDERS

0.6"Ø LOW RELAXATION	GIRDER A2, B2, C2																				
	BRG.	0.05	0.1	0.15	0.2	0.25	0.3	0.35	0.4	0.45	0.5	0.55	0.6	0.65	0.7	0.75	0.8	0.85	0.90	0.95	BRG.
CAMBER (GIRDER IN PLACE) ↑	0	0.051	0.101	0.148	0.190	0.229	0.261	0.287	0.305	0.317	0.321	0.317	0.305	0.287	0.261	0.229	0.190	0.148	0.101	0.051	0
✳ DEFLECTION DUE TO SUPERIMPOSED D.L. ↓	0	0.027	0.054	0.081	0.106	0.126	0.141	0.152	0.160	0.168	0.178	0.168	0.160	0.152	0.141	0.126	0.106	0.081	0.054	0.027	0
FINAL CAMBER ↑	0	5/16"	9/16"	13/16"	1"	1 1/4"	1 7/16"	1 5/8"	1 3/4"	1 13/16"	1 13/16"	1 13/16"	1 3/4"	1 5/8"	1 7/16"	1 1/4"	1"	13/16"	9/16"	5/16"	0

✳ INCLUDES FUTURE WEARING SURFACE.
ALL VALUES ARE SHOWN IN FEET (DECIMAL FORM), EXCEPT "FINAL CAMBER", WHICH IS GIVEN IN INCHES (FRACTION FORM).

DEAD LOAD DEFLECTION TABLE FOR GIRDERS

0.6"Ø LOW RELAXATION	GIRDER A3, B3, C3																				
	BRG.	0.05	0.1	0.15	0.2	0.25	0.3	0.35	0.4	0.45	0.5	0.55	0.6	0.65	0.7	0.75	0.8	0.85	0.90	0.95	BRG.
CAMBER (GIRDER IN PLACE) ↑	0	0.051	0.101	0.148	0.190	0.229	0.261	0.287	0.305	0.317	0.321	0.317	0.305	0.287	0.261	0.229	0.190	0.148	0.101	0.051	0
✳ DEFLECTION DUE TO SUPERIMPOSED D.L. ↓	0	0.026	0.053	0.080	0.104	0.124	0.139	0.149	0.158	0.165	0.174	0.165	0.158	0.149	0.139	0.124	0.104	0.080	0.053	0.026	0
FINAL CAMBER ↑	0	5/16"	9/16"	13/16"	1 1/16"	1 1/4"	1 7/16"	1 5/8"	1 3/4"	1 13/16"	1 13/16"	1 13/16"	1 3/4"	1 5/8"	1 7/16"	1 1/4"	1 1/16"	13/16"	9/16"	5/16"	0

✳ INCLUDES FUTURE WEARING SURFACE.
ALL VALUES ARE SHOWN IN FEET (DECIMAL FORM), EXCEPT "FINAL CAMBER", WHICH IS GIVEN IN INCHES (FRACTION FORM).

PROJECT NO. R-3825B
JOHNSTON COUNTY
STATION: 64+20.00 -L-

SHEET 1 OF 3

STATE OF NORTH CAROLINA
DEPARTMENT OF TRANSPORTATION
RALEIGH

SUPERSTRUCTURE

DEAD LOAD DEFLECTIONS

V&M
Vaughn & Melton
Consulting Engineers
Asheville, North Carolina
828-253-2796
Raleigh, NC 919-977-9455
Charlotte, NC 704-357-0488
Boone, NC 828-355-9933
Tri-Cities, TN 423-467-8401
Knoxville, TN 865-546-5800
Spartanburg, SC 864-574-4775
Charleston, SC 843-974-5650
Middlesboro, KY 606-248-6600
Atlanta, GA 770-627-3590

Copyright © 2006 Vaughn & Melton, Inc. All Rights Reserved

NORTH CAROLINA PROFESSIONAL ENGINEER SEAL 20111 HARDY L. WILLIS
Digitally signed by HARDY WILLIS
DN: c=US, st=NORTH CAROLINA, l=RALEIGH, o=VAUGHN & MELTON, ou=ENGINEERING, cn=HARDY WILLIS, email=hwillis@vandm.com
7/17/2018 9:13:46 AM EDT

DOCUMENT NOT CONSIDERED FINAL UNLESS ALL SIGNATURES COMPLETED

REVISIONS						SHEET NO.
NO.	BY:	DATE:	NO.	BY:	DATE:	S-24
1			3			TOTAL SHEETS
2			4			59

DRAWN BY : WDC DATE : 7/2017
CHECKED BY : ACO DATE : 12/2017
DESIGN ENGINEER OF RECORD: ACO DATE : 12/2017

DEAD LOAD DEFLECTION TABLE FOR GIRDERS

0.6"Ø LOW RELAXATION	GIRDER A4, B4, C4																				
	BRG.	0.05	0.1	0.15	0.2	0.25	0.3	0.35	0.4	0.45	0.5	0.55	0.6	0.65	0.7	0.75	0.8	0.85	0.90	0.95	BRG.
CAMBER (GIRDER IN PLACE) ↑	0	0.051	0.101	0.148	0.190	0.229	0.261	0.287	0.305	0.317	0.321	0.317	0.305	0.287	0.261	0.229	0.190	0.148	0.101	0.051	0
✳ DEFLECTION DUE TO SUPERIMPOSED D.L. ↓	0	0.027	0.055	0.083	0.108	0.128	0.143	0.154	0.163	0.171	0.180	0.171	0.163	0.154	0.143	0.128	0.108	0.083	0.055	0.027	0
FINAL CAMBER ↑	0	5/16"	9/16"	3/4"	1"	1 3/16"	1 7/16"	1 5/8"	1 11/16"	1 3/4"	1 3/4"	1 3/4"	1 11/16"	1 5/8"	1 7/16"	1 3/16"	1"	3/4"	9/16"	5/16"	0

✳ INCLUDES FUTURE WEARING SURFACE.
ALL VALUES ARE SHOWN IN FEET (DECIMAL FORM), EXCEPT "FINAL CAMBER", WHICH IS GIVEN IN INCHES (FRACTION FORM).

DEAD LOAD DEFLECTION TABLE FOR GIRDERS

0.6"Ø LOW RELAXATION	GIRDER A5, B5, C5																				
	BRG.	0.05	0.1	0.15	0.2	0.25	0.3	0.35	0.4	0.45	0.5	0.55	0.6	0.65	0.7	0.75	0.8	0.85	0.90	0.95	BRG.
CAMBER (GIRDER IN PLACE) ↑	0	0.051	0.101	0.148	0.190	0.229	0.261	0.287	0.305	0.317	0.321	0.317	0.305	0.287	0.261	0.229	0.190	0.148	0.101	0.051	0
✳ DEFLECTION DUE TO SUPERIMPOSED D.L. ↓	0	0.023	0.046	0.068	0.089	0.107	0.119	0.128	0.135	0.142	0.149	0.142	0.135	0.128	0.119	0.107	0.089	0.068	0.046	0.023	0
FINAL CAMBER ↑	0	5/16"	11/16"	15/16"	1 3/16"	1 7/16"	1 11/16"	1 15/16"	2 1/16"	2 1/8"	2 1/8"	2 1/8"	2 1/16"	1 15/16"	1 11/16"	1 7/16"	1 3/16"	15/16"	11/16"	5/16"	0

✳ INCLUDES FUTURE WEARING SURFACE.
ALL VALUES ARE SHOWN IN FEET (DECIMAL FORM), EXCEPT "FINAL CAMBER", WHICH IS GIVEN IN INCHES (FRACTION FORM).

DEAD LOAD DEFLECTION TABLE FOR GIRDERS

0.6"Ø LOW RELAXATION	GIRDER A6, B6, C6																				
	BRG.	0.05	0.1	0.15	0.2	0.25	0.3	0.35	0.4	0.45	0.5	0.55	0.6	0.65	0.7	0.75	0.8	0.85	0.90	0.95	BRG.
CAMBER (GIRDER IN PLACE) ↑	0	0.051	0.101	0.148	0.190	0.229	0.261	0.287	0.305	0.317	0.321	0.317	0.305	0.287	0.261	0.229	0.190	0.148	0.101	0.051	0
✳ DEFLECTION DUE TO SUPERIMPOSED D.L. ↓	0	0.023	0.048	0.073	0.094	0.113	0.126	0.136	0.143	0.151	0.159	0.151	0.143	0.136	0.126	0.113	0.094	0.073	0.048	0.023	0
FINAL CAMBER ↑	0	5/16"	5/8"	7/8"	1 1/8"	1 3/8"	1 5/8"	1 13/16"	1 15/16"	2"	2"	2"	1 15/16"	1 13/16"	1 5/8"	1 3/8"	1 1/8"	7/8"	5/8"	5/16"	0

✳ INCLUDES FUTURE WEARING SURFACE.
ALL VALUES ARE SHOWN IN FEET (DECIMAL FORM), EXCEPT "FINAL CAMBER", WHICH IS GIVEN IN INCHES (FRACTION FORM).

PROJECT NO. R-3825B
JOHNSTON COUNTY
STATION: 64+20.00 -L-

SHEET 2 OF 3

STATE OF NORTH CAROLINA
DEPARTMENT OF TRANSPORTATION
RALEIGH

SUPERSTRUCTURE

DEAD LOAD DEFLECTIONS

V&M
Vaughn & Melton
Consulting Engineers
Asheville, North Carolina
828-253-2796
Raleigh, NC 919-977-9455
Charlotte, NC 704-357-0488
Boone, NC 828-355-9933
Tri-Cities, TN 423-467-8401
Knoxville, TN 865-546-5800
Spartanburg, SC 864-574-4775
Charleston, SC 843-974-5650
Middlesboro, KY 606-248-6600
Atlanta, GA 770-627-3590

Copyright © 2006 Vaughn & Melton, Inc. All Rights Reserved

NORTH CAROLINA PROFESSIONAL ENGINEER SEAL 028726 HARDY L. WILLIS
7/17/2018 9:13:46 AM EDT

DOCUMENT NOT CONSIDERED FINAL UNLESS ALL SIGNATURES COMPLETED

REVISIONS						
NO.	BY:	DATE:	NO.	BY:	DATE:	
1			3			
2			4			

SHEET NO. S-25
TOTAL SHEETS 59

DRAWN BY : WDC DATE : 7/2017
CHECKED BY : ACO DATE : 12/2017
DESIGN ENGINEER OF RECORD: ACO DATE : 12/2017

DEAD LOAD DEFLECTION TABLE FOR GIRDERS

0.6"Ø LOW RELAXATION	GIRDER A7, A8, B7, B8, C7, C8																				
	BRG.	0.05	0.1	0.15	0.2	0.25	0.3	0.35	0.4	0.45	0.5	0.55	0.6	0.65	0.7	0.75	0.8	0.85	0.90	0.95	BRG.
CAMBER (GIRDER IN PLACE) ↑	0	0.051	0.101	0.148	0.190	0.229	0.261	0.287	0.305	0.317	0.321	0.317	0.305	0.287	0.261	0.229	0.190	0.148	0.101	0.051	0
✳ DEFLECTION DUE TO SUPERIMPOSED D.L. ↓	0	0.028	0.058	0.087	0.113	0.135	0.151	0.163	0.173	0.181	0.191	0.181	0.173	0.163	0.151	0.135	0.113	0.087	0.058	0.028	0
FINAL CAMBER ↑	0	1/4"	1/2"	3/4"	15/16"	1 1/8"	1 5/16"	1 1/2"	1 9/16"	1 5/8"	1 5/8"	1 5/8"	1 9/16"	1 1/2"	1 5/16"	1 1/8"	15/16"	3/4"	1/2"	1/4"	0

✳ INCLUDES FUTURE WEARING SURFACE.
ALL VALUES ARE SHOWN IN FEET (DECIMAL FORM), EXCEPT "FINAL CAMBER", WHICH IS GIVEN IN INCHES (FRACTION FORM).

DEAD LOAD DEFLECTION TABLE FOR GIRDERS

0.6"Ø LOW RELAXATION	GIRDER A9, B9, C9																				
	BRG.	0.05	0.1	0.15	0.2	0.25	0.3	0.35	0.4	0.45	0.5	0.55	0.6	0.65	0.7	0.75	0.8	0.85	0.90	0.95	BRG.
CAMBER (GIRDER IN PLACE) ↑	0	0.051	0.101	0.148	0.190	0.229	0.261	0.287	0.305	0.317	0.321	0.317	0.305	0.287	0.261	0.229	0.190	0.148	0.101	0.051	0
✳ DEFLECTION DUE TO SUPERIMPOSED D.L. ↓	0	0.029	0.059	0.089	0.116	0.138	0.155	0.168	0.177	0.186	0.196	0.186	0.177	0.168	0.155	0.138	0.116	0.089	0.059	0.029	0
FINAL CAMBER ↑	0	1/4"	1/2"	11/16"	7/8"	1 1/16"	1 1/4"	1 7/16"	1 9/16"	1 9/16"	1 9/16"	1 9/16"	1 9/16"	1 7/16"	1 1/4"	1 1/16"	7/8"	11/16"	1/2"	1/4"	0

✳ INCLUDES FUTURE WEARING SURFACE.
ALL VALUES ARE SHOWN IN FEET (DECIMAL FORM), EXCEPT "FINAL CAMBER", WHICH IS GIVEN IN INCHES (FRACTION FORM).

DEAD LOAD DEFLECTION TABLE FOR GIRDERS

0.6"Ø LOW RELAXATION	GIRDER A10, B10, C10																				
	BRG.	0.05	0.1	0.15	0.2	0.25	0.3	0.35	0.4	0.45	0.5	0.55	0.6	0.65	0.7	0.75	0.8	0.85	0.90	0.95	BRG.
CAMBER (GIRDER IN PLACE) ↑	0	0.051	0.101	0.148	0.190	0.229	0.261	0.287	0.305	0.317	0.321	0.317	0.305	0.287	0.261	0.229	0.190	0.148	0.101	0.051	0
✳ DEFLECTION DUE TO SUPERIMPOSED D.L. ↓	0	0.030	0.061	0.092	0.119	0.143	0.160	0.173	0.182	0.191	0.202	0.191	0.182	0.173	0.160	0.143	0.119	0.092	0.061	0.030	0
FINAL CAMBER ↑	0	1/4"	1/2"	11/16"	7/8"	1 1/16"	1 3/16"	1 3/8"	1 1/2"	1 1/2"	1 1/2"	1 1/2"	1 1/2"	1 3/8"	1 3/16"	1 1/16"	7/8"	11/16"	1/2"	1/4"	0

✳ INCLUDES FUTURE WEARING SURFACE.
ALL VALUES ARE SHOWN IN FEET (DECIMAL FORM), EXCEPT "FINAL CAMBER", WHICH IS GIVEN IN INCHES (FRACTION FORM).

DEAD LOAD DEFLECTION TABLE FOR GIRDERS

0.6"Ø LOW RELAXATION	GIRDER A11, B11, C11																				
	BRG.	0.05	0.1	0.15	0.2	0.25	0.3	0.35	0.4	0.45	0.5	0.55	0.6	0.65	0.7	0.75	0.8	0.85	0.90	0.95	BRG.
CAMBER (GIRDER IN PLACE) ↑	0	0.051	0.101	0.148	0.190	0.229	0.261	0.287	0.305	0.317	0.321	0.317	0.305	0.287	0.261	0.229	0.190	0.148	0.101	0.051	0
✳ DEFLECTION DUE TO SUPERIMPOSED D.L. ↓	0	0.029	0.059	0.089	0.116	0.138	0.155	0.167	0.176	0.184	0.194	0.184	0.176	0.167	0.155	0.138	0.116	0.089	0.059	0.029	0
FINAL CAMBER ↑	0	1/4"	1/2"	11/16"	7/8"	1 1/16"	1 1/4"	1 7/16"	1 9/16"	1 5/8"	1 5/8"	1 5/8"	1 9/16"	1 7/16"	1 1/4"	1 1/16"	7/8"	11/16"	1/2"	1/4"	0

✳ INCLUDES FUTURE WEARING SURFACE.
ALL VALUES ARE SHOWN IN FEET (DECIMAL FORM), EXCEPT "FINAL CAMBER", WHICH IS GIVEN IN INCHES (FRACTION FORM).

PROJECT NO. R-3825B
JOHNSTON COUNTY
STATION: 64+20.00 -L-

SHEET 3 OF 3

STATE OF NORTH CAROLINA
DEPARTMENT OF TRANSPORTATION
RALEIGH

SUPERSTRUCTURE

DEAD LOAD DEFLECTIONS

V&M
Vaughn & Melton
Consulting Engineers
Asheville, North Carolina
828-253-2796
Raleigh, NC 919-977-9455
Charlotte, NC 704-357-0488
Boone, NC 828-355-9933
Tri-Cities, TN 423-467-8401
Knoxville, TN 865-546-5800
Spartanburg, SC 864-574-4775
Charleston, SC 843-974-5650
Middlesboro, KY 606-248-6600
Atlanta, GA 770-627-3590

Copyright © 2006 Vaughn & Melton, Inc. All Rights Reserved

NORTH CAROLINA PROFESSIONAL SEAL ENGINEER HARDY L. WILLIS
Established by: Hardy Willis
7/17/2018 9:13:46 AM EDT

DOCUMENT NOT CONSIDERED FINAL UNLESS ALL SIGNATURES COMPLETED

REVISIONS						
NO.	BY:	DATE:	NO.	BY:	DATE:	
1			3			
2			4			

SHEET NO. S-26
TOTAL SHEETS 59

DRAWN BY : WDC DATE : 7/2017
CHECKED BY : ACO DATE : 12/2017
DESIGN ENGINEER OF RECORD: ACO DATE : 12/2017

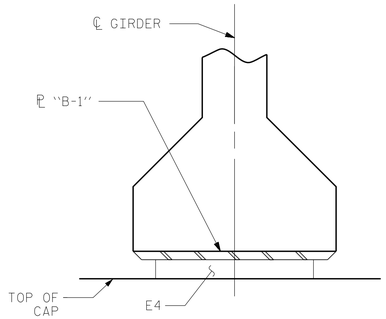

SECTION D-D

(SHOWING INTEGRAL END BENT)

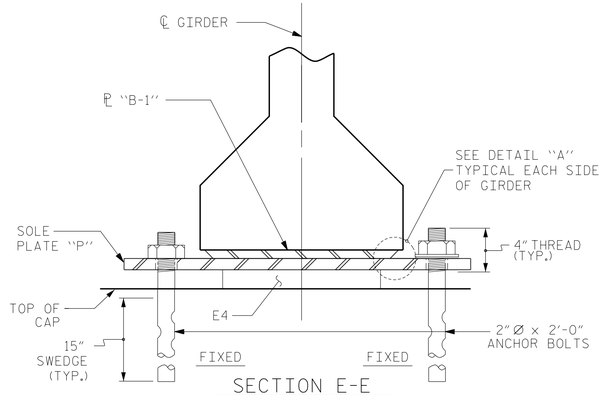

SECTION E-E

(SHOWING CONTINUOUS BENT)

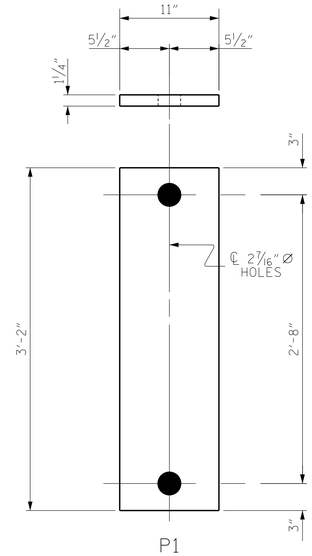

P1
(FIXED)

(44 REQ'D)

SOLE PLATE DETAILS ("P")

NOTES

AT ALL FIXED POINTS OF SUPPORT, NUTS FOR ANCHOR BOLTS ARE TO BE TIGHTENED FINGER TIGHT AND THEN BACKED OFF ½ TURN. THE THREAD OF THE NUT AND BOLT SHALL THEN BE BURRED WITH A SHARP POINTED TOOL.

STEEL SOLE PLATES, ANCHOR BOLTS, NUTS, AND WASHERS SHALL BE GALVANIZED IN ACCORDANCE WITH THE STANDARD SPECIFICATIONS.

PRIOR TO WELDING, GRIND THE GALVANIZED SURFACE OF THE PORTION OF THE EMBEDDED PLATE AND SOLE PLATE THAT ARE TO BE WELDED. AFTER WELDING, DAMAGED GALVANIZED SURFACES SHALL BE REPAIRED IN ACCORDANCE WITH THE STANDARD SPECIFICATIONS.

WHEN WELDING THE SOLE PLATE TO THE EMBEDDED PLATE IN THE GIRDER, USE TEMPERATURE INDICATING WAX PENS, OR OTHER SUITABLE MEANS, TO ENSURE THAT THE TEMPERATURE OF THE SOLE PLATE DOES NOT EXCEED 300°F. TEMPERATURES ABOVE THIS MAY DAMAGE THE ELASTOMER.

SOLE PLATE "P", BOLTS, NUTS, WASHERS, AND PIPE SLEEVE SHALL BE INCLUDED IN THE PAY ITEM FOR PRESTRESSED CONCRETE GIRDERS.

ANCHOR BOLTS SHALL MEET THE REQUIREMENTS OF ASTM A449. NUTS SHALL MEET THE REQUIREMENTS OF AASHTO M291-DH OR AASHTO M292-2H. WASHERS SHALL MEET THE REQUIREMENTS OF AASHTO M293. NO SHOP DRAWINGS ARE REQUIRED FOR ANCHOR BOLTS, NUTS AND WASHERS. SHOP INSPECTION IS REQUIRED.

ALL SURFACES OF BEARING PLATES SHALL BE SMOOTH AND STRAIGHT.

THE ELASTOMER IN THE STEEL REINFORCED BEARINGS SHALL HAVE A SHEAR MODULUS OF 0.160 KSI, IN ACCORDANCE WITH AASHTO M251.

FOR STEEL REINFORCED ELASTOMERIC BEARINGS, SEE SPECIAL PROVISIONS.

ALL SOLE PLATES SHALL BE AASHTO M270 GRADE 36.

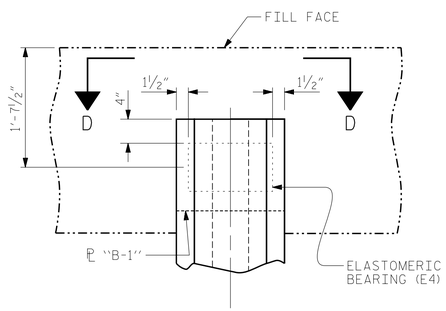

PLAN VIEW AT END BENTS

(SHOWING INTEGRAL END BENT)

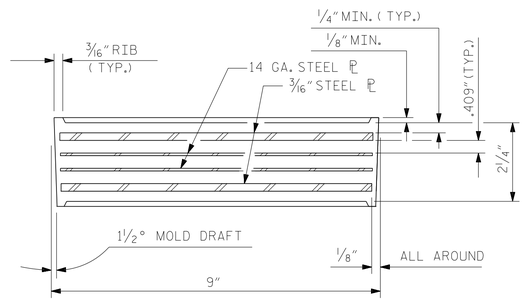

TYPICAL SECTION OF ELASTOMERIC BEARING

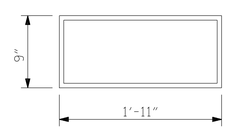

E4 (66 REQ'D)

PLAN VIEW OF ELASTOMERIC BEARING

TYPE V

MAXIMUM ALLOWABLE SERVICE LOADS	
D.L.+L.L. (NO IMPACT)	
TYPE V	365 k

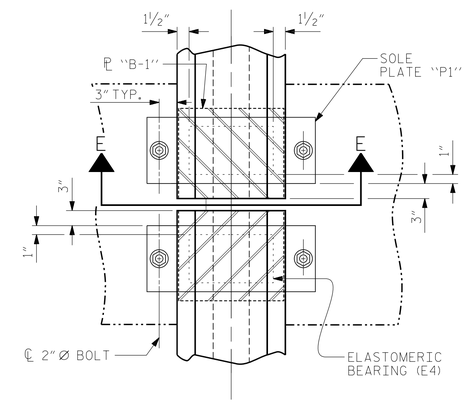

PLAN VIEW AT BENTS

(SHOWING CONTINUOUS BENT)

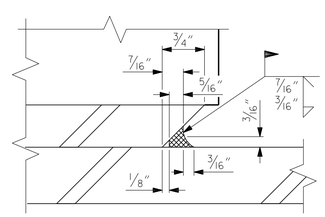

DETAIL "A"

PROJECT NO. R-3825B

JOHNSTON COUNTY

STATION: 64+20.00 -L-

V&M
Vaughn & Melton
Consulting Engineers
Asheville, North Carolina
828-253-2796
Raleigh, NC 919-977-9455
Charlotte, NC 704-357-0488
Boone, NC 828-355-9933
Tri-Cities, TN 423-467-8401
Knoxville, TN 865-546-5800
Spartanburg, SC 864-574-4775
Charleston, SC 843-974-5650
Middlesboro, KY 606-248-6600
Atlanta, GA 770-627-3590

Copyright © 2006 Vaughn & Melton, Inc. All Rights Reserved

NORTH CAROLINA PROFESSIONAL SEAL ENGINEER HARDY L. WILLIS
SEALED for Hardy Willis
7/17/2018 9:13:46 AM EDT

DOCUMENT NOT CONSIDERED FINAL UNLESS ALL SIGNATURES COMPLETED

STATE OF NORTH CAROLINA
DEPARTMENT OF TRANSPORTATION
RALEIGH

STANDARD

ELASTOMERIC BEARING DETAILS

PRESTRESSED CONCRETE GIRDER SUPERSTRUCTURE

REVISIONS						SHEET NO.
NO.	BY:	DATE:	NO.	BY:	DATE:	S-27
1			3			TOTAL SHEETS
2			4			59

STD. NO. EB4

ASSEMBLED BY :	WDC	DATE :	7/2017
CHECKED BY :	ACO	DATE :	12/2017
DRAWN BY : EEM	2/97	REV. 10/1/11	MAA/GM
CHECKED BY : VAP	2/97	REV. 6/13	AAC/MAA
		REV. 1/15	MAA/TMG

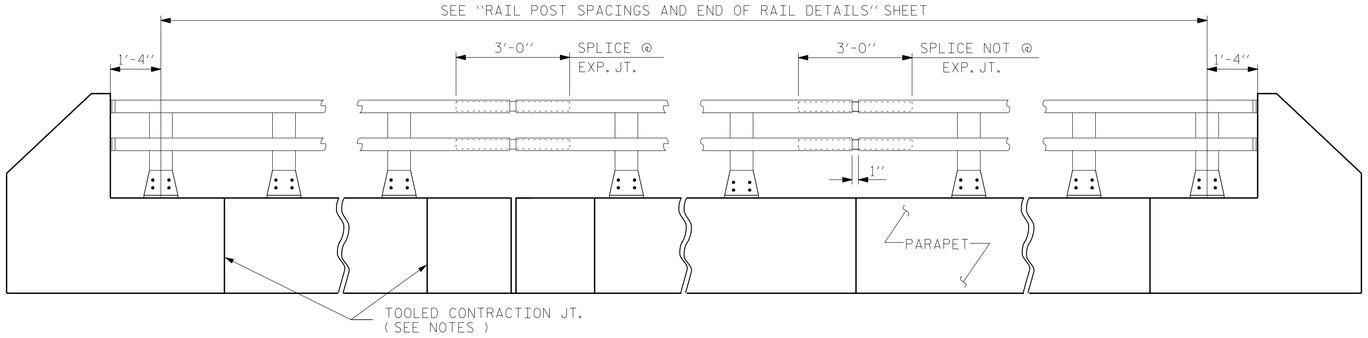

ELEVATION

NOTE : FOR ATTACHMENT OF METAL RAIL TO END POST, SEE STANDARD NO. BMR2.

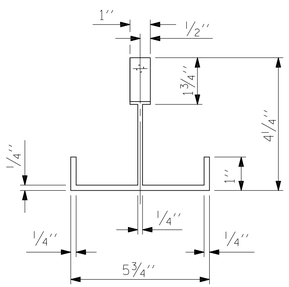

PLAN

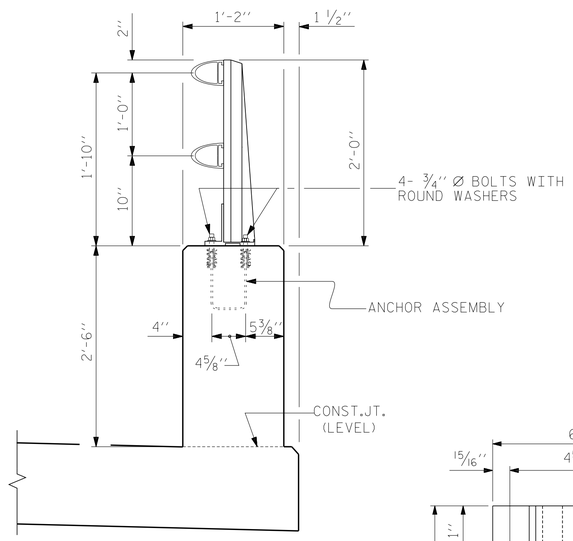

SECTION THRU PARAPET AND RAIL

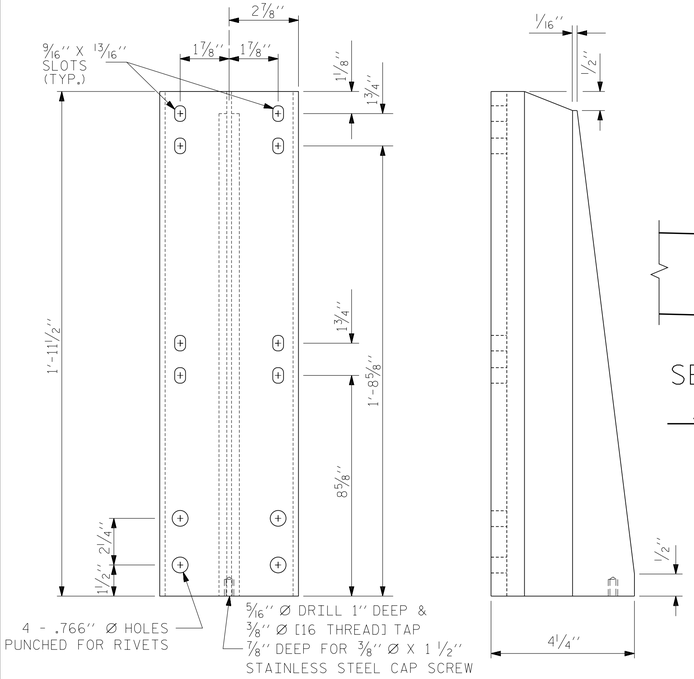

FRONT ELEVATION

SIDE ELEVATION

DETAILS OF POST

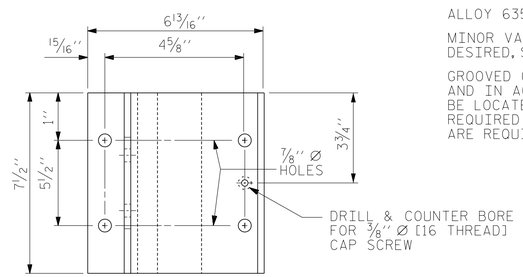

PLAN

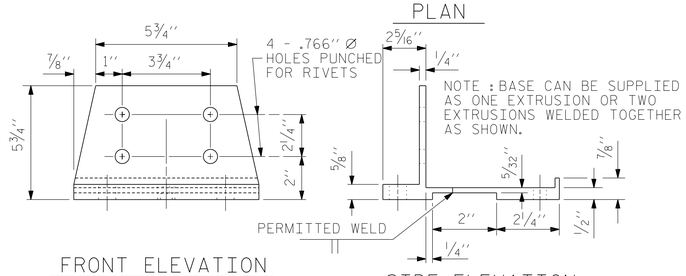

FRONT ELEVATION

SIDE ELEVATION

POST BASE DETAILS

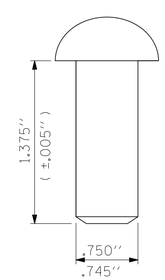

RIVET DETAIL

NOTES

AT THE CONTRACTOR'S OPTION, METAL RAIL MAY BE EITHER ALUMINUM OR GALVANIZED STEEL IN ACCORDANCE WITH THE REQUIREMENTS OF THE GENERAL NOTES AND THE FOLLOWING SPECIFICATIONS FOR THE ALTERNATE MATERIALS; HOWEVER, THE CONTRACTOR WILL BE REQUIRED TO USE THE SAME RAIL MATERIAL ON ALL STRUCTURES ON THE PROJECT FOR WHICH METAL RAIL IS DESIGNATED.

UNLESS OTHERWISE REQUIRED IN THE CONTRACT DOCUMENTS, THE CONTRACTOR HAS THE OPTION TO USE AN ALTERNATE TO THE 2 BAR METAL RAIL. THE ALTERNATE RAIL SHALL MEET THE REQUIREMENTS OF THE AASHTO LRFD BRIDGE DESIGN SPECIFICATIONS AND MUST BE LISTED ON THE DEPARTMENT'S APPROVED PRODUCTS LIST (APL) UNDER "2 BAR METAL RAIL ALTERNATE". ADJUSTMENTS TO THE CONCRETE PARAPET WILL NOT BE ALLOWED.

ALUMINUM RAILS

MATERIAL FOR POSTS, BASES AND RAILS, EXPANSION BARS AND CLAMP BARS SHALL BE ASTM B-221 ALLOY 6061-T6.

MATERIAL FOR RIVETS SHALL BE ASTM B316 ALLOY 6061-T6. RIVETS SHALL BE STANDARD BUTTON HEAD AND CONE POINT COLD DRIVEN AS PER DRAWING.

THE BASE OF RAIL POSTS, OR ANY OTHER ALUMINUM SURFACE IN CONTACT WITH CONCRETE SHALL BE THOROUGHLY COATED WITH AN ALUMINUM IMPREGNATED CAULKING COMPOUND OF APPROVED QUALITY.

MATERIAL FOR SHIMS TO BE ASTM B209 ALLOY 6061-T6.

GALVANIZED STEEL RAILS

MATERIAL AND GALVANIZING ARE TO CONFORM TO THE FOLLOWING SPECIFICATIONS:

POST, POST BASES, RAILS, EXPANSION BARS AND CLAMP BARS: AASHTO M270 GRADE 36 STRUCTURAL STEEL - GALVANIZED TO AASHTO M111.

RIVETS: RIVETS SHALL MEET THE REQUIREMENTS OF ASTM A502 FOR GRADE 1 RIVETS.

THE CUT ENDS OF GALVANIZED STEEL RAILING, AFTER GRINDING SMOOTH SHALL BE GIVEN TWO COATS OF ZINC RICH PAINT MEETING THE REQUIREMENTS OF FEDERAL SPECIFICATION MIL-P-26915 USAF TYPE 1, OR OF FEDERAL SPECIFICATIONS TT-P-641.

SHIMS: SHIMS SHALL MEET THE REQUIREMENTS OF ASTM A570 FOR GRADE 33 OR A611 FOR GRADE C AND SHALL BE GALVANIZED IN ACCORDANCE WITH AASHTO M111.

RAIL CAPS: RAIL CAPS SHALL MEET THE REQUIREMENTS OF ASTM A570 FOR GRADE 33 OR A611 FOR GRADE C AND SHALL BE GALVANIZED IN ACCORDANCE WITH AASHTO M111.

GENERAL NOTES

RAILING SHALL BE CONTINUOUS FROM END POST TO END POST OF BRIDGE. EACH JOINT IN RAIL LENGTH SHALL BE SPLICED AS DETAILED. PANEL LENGTHS OF RAIL SHALL BE ATTACHED TO A MINIMUM OF THREE POSTS.

FOR END OF RAIL TO CLEAR FACE OF CONCRETE END POST DIMENSION, SEE STANDARD NO. BMR2.

CAP SCREWS SHALL BE ASTM F593 ALLOY 305 STAINLESS STEEL. WASHERS SHALL MEET THE REQUIREMENTS OF ASTM F844 EXCEPT THEY SHALL BE MADE FROM ALLOY 304 STAINLESS STEEL.

CERTIFIED MILL REPORTS ARE REQUIRED FOR RAILS AND POSTS. SHOP INSPECTION IS NOT REQUIRED.

METAL RAIL POSTS SHALL BE SET NORMAL TO CURB GRADE.

METHOD OF MEASUREMENT FOR METAL RAILS: FOR LENGTH OF METAL RAILS TO BE PAID FOR, SEE THE STANDARD SPECIFICATIONS.

CURVED RAIL USAGE: WHERE RAILS ARE TO BE USED ON BRIDGES ON HORIZONTAL AND/OR VERTICAL CURVATURE THE CONTRACTOR MAY, AT HIS OPTION, HAVE THE REQUIRED CURVATURE IN THE RAIL FORMED IN THE SHOP OR IN THE FIELD. IN EITHER EVENT, THE RAIL SHALL CONFORM WITHOUT BUCKLING OR KINKING TO THE REQUIRED CURVATURE IN A UNIFORM MANNER ACCEPTABLE TO THE ENGINEER.

TO INSURE FUTURE IDENTIFICATION OF THE FABRICATOR, A PERMANENT IDENTIFYING MARK SHALL BE PLACED ON EACH POST. THE METHOD OF MARKING AND LOCATION SHALL BE SUCH THAT IT DOES NOT DETRACT FROM THE APPEARANCE OF THE POST, BUT REMAINS VISIBLE AFTER RAIL PLACEMENT.

SHIMS SHALL BE USED AS NECESSARY FOR POST ALIGNMENT.

ALLOY 6351-T5 MAY BE SUBSTITUTED FOR ALLOY 6061-T6 WHERE APPLICABLE.

MINOR VARIATIONS IN DETAILS OF METAL RAIL WILL BE CONSIDERED. DETAILS OF SUCH VARIATIONS, IF DESIRED, SHALL BE SUBMITTED FOR APPROVAL.

GROOVED CONTRACTION JOINTS, 1/2" IN DEPTH, SHALL BE TOOLED IN ALL EXPOSED FACES OF THE PARAPET AND IN ACCORDANCE WITH ARTICLE 825-10(B) OF THE STANDARD SPECIFICATIONS. A CONTRACTION JOINT SHALL BE LOCATED AT EACH THIRD POINT BETWEEN PARAPET EXPANSION JOINTS. ONLY ONE CONTRACTION JOINT IS REQUIRED AT MIDPOINT OF PARAPET SEGMENTS LESS THAN 20 FEET IN LENGTH AND NO CONTRACTION JOINTS ARE REQUIRED FOR THOSE SEGMENTS LESS THAN 10 FEET IN LENGTH.

PAY LENGTH = 733.67 LIN. FT.

NORTH CAROLINA PROFESSIONAL ENGINEER SEAL 20117 HARDY L. WILLIS
Docusigned by: Hardy Willis
7/17/2018 9:13:46 AM EDT

DOCUMENT NOT CONSIDERED FINAL UNLESS ALL SIGNATURES COMPLETED

V&M
Vaughn & Melton
Consulting Engineers
Asheville, North Carolina
828-253-2796
Raleigh, NC 919-977-9455
Charlotte, NC 704-357-0488
Boone, NC 828-355-9933
Tri-Cities, TN 423-467-8401
Knoxville, TN 865-546-5800
Spartanburg, SC 864-574-4775
Charleston, SC 843-974-5650
Middlesboro, KY 606-248-6600
Atlanta, GA 770-627-3590

Copyright © 2006 Vaughn & Melton, Inc. All Rights Reserved

PROJECT NO. R-3825B
JOHNSTON COUNTY
STATION: 64+20.00 -L-

SHEET 1 OF 2

STATE OF NORTH CAROLINA
DEPARTMENT OF TRANSPORTATION
RALEIGH

STANDARD

2 BAR METAL RAIL

REVISIONS						SHEET NO.
NO.	BY:	DATE:	NO.	BY:	DATE:	S-28
1			3			TOTAL SHEETS
2			4			59

ASSEMBLED BY : WDC	DATE : 7/2017	
CHECKED BY : ACO	DATE : 12/2017	
DRAWN BY : EEM 6/94	REV. 5/1/06	TLA/GM
CHECKED BY : RGW 6/94	REV. 10/1/11	MAA/GM
	REV. 6/13	MAA/GM

STD. NO. BMR3

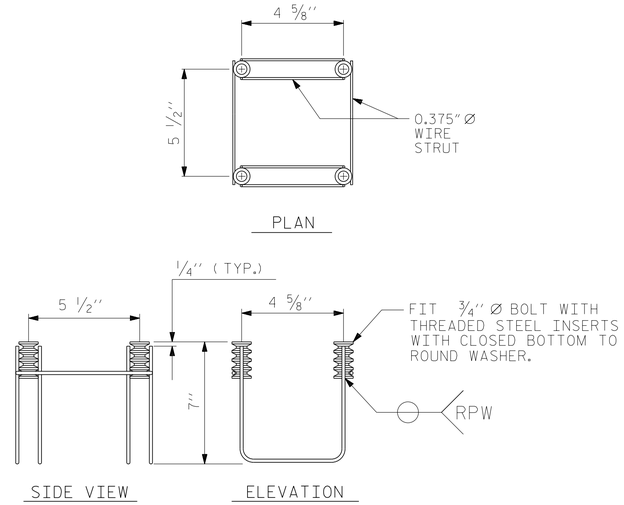

4-BOLT METAL RAIL ANCHOR ASSEMBLY

(124 ASSEMBLIES REQUIRED)

NOTES

STRUCTURAL CONCRETE ANCHOR ASSEMBLY

THE STRUCTURAL CONCRETE ANCHOR ASSEMBLY SHALL CONSIST OF THE FOLLOWING COMPONENTS :

A. FERRULES SHALL BE MADE FROM STEEL MEETING THE REQUIREMENTS OF AASHTO M169, GRADE 12L14 AND SHALL HAVE A MINIMUM LENGTH OF THREADS OF 2'' FOR 3/4'' FERRULES.

B. 4 - 3/4'' Ø X 2 1/2'' BOLTS WITH WASHERS. BOLTS SHALL CONFORM TO THE REQUIREMENTS OF ASTM A307. BOLTS AND WASHERS SHALL BE GALVANIZED. AT THE CONTRACTOR'S OPTION, STAINLESS STEEL BOLTS AND WASHERS MAY BE USED AS AN ALTERNATE FOR THE 3/4'' Ø X 2 1/2'' GALVANIZED BOLTS AND WASHERS. THEY SHALL CONFORM TO OR EXCEED THE MECHANICAL REQUIREMENTS OF ASTM A307. THE USE OF THIS ALTERNATE SHALL BE APPROVED BY THE ENGINEER.

C. WIRE STRUT SHOWN IN THE CONCRETE ANCHOR ASSEMBLY DETAIL IS THE MINIMUM ALLOWABLE SIZE AND SHALL HAVE A MINIMUM TENSILE STRENGTH OF 100,000 PSI. AS AN OPTION, A 7/16'' Ø WIRE STRUT WITH A MINIMUM TENSILE STRENGTH OF 90,000 PSI IS ACCEPTABLE.

D. THE METAL RAIL ANCHOR ASSEMBLIES TO BE HOT DIPPED GALVANIZED TO CONFORM TO REQUIREMENTS OF AASHTO M111.

E. THE COST OF THE METAL RAIL ANCHOR ASSEMBLY WITH BOLTS AND WASHERS COMPLETE IN PLACE SHALL BE INCLUDED IN THE PRICE BID FOR LINEAR FEET OF METAL RAIL.

F. BOLTS TO BE TIGHTENED ONE-HALF TURN WITH A WRENCH FROM A FINGER-TIGHT POSITION.

THE CONTRACTOR MAY USE ADHESIVELY ANCHORED ANCHOR BOLTS IN PLACE OF THE METAL RAIL ANCHOR ASSEMBLY. LEVEL ONE FIELD TESTING IS REQUIRED, AND THE YIELD LOAD OF THE 3/4" Ø BOLT IS 10 KIPS. FOR ADHESIVELY ANCHORED ANCHOR BOLTS OR DOWELS, SEE THE STANDARD SPECIFICATIONS.

WHEN ADHESIVELY ANCHORED ANCHOR BOLTS ARE USED, BOLTS SHALL MEET THE REQUIREMENTS OF ASTM F593 ALLOY 304 STAINLESS STEEL WITH MINIMUM 75,000 PSI ULTIMATE STRENGTH. NUTS SHALL MEET THE REQUIREMENTS OF ASTM F594 ALLOY 304 STAINLESS STEEL AND WASHERS SHALL MEET THE REQUIREMENTS OF ASTM F844 EXCEPT THEY SHALL BE MADE FROM ALLOY 304 STAINLESS STEEL.

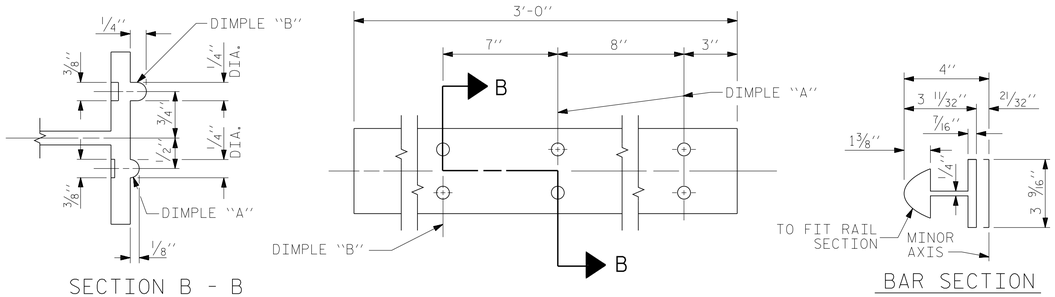

EXPANSION BAR DETAILS

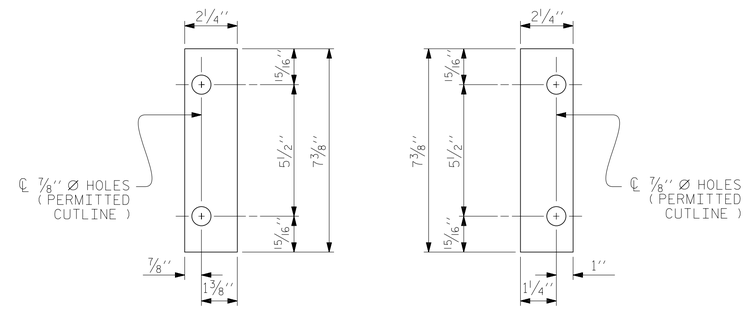

SHIM DETAILS

NOTE :
SHIMS MAY BE CUT ALONG PERMITTED CUTLINE OR SLOTTED TO EDGE OF PLATE TO FACILITATE PLACEMENT.

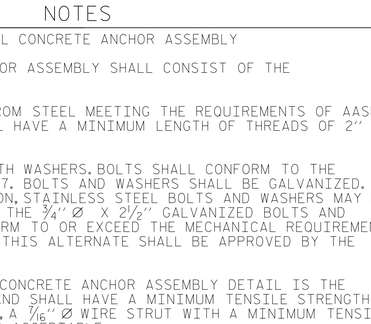

RAIL SECTION

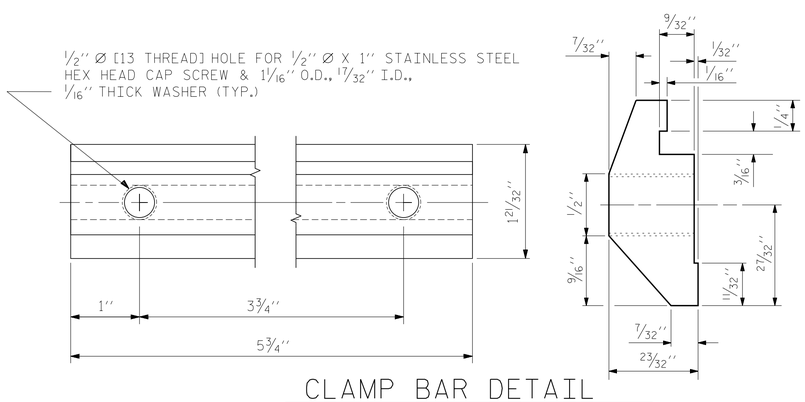

CLAMP BAR DETAIL

(4 REQUIRED PER POST)

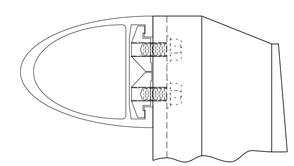

CLAMP ASSEMBLY

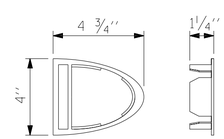

RAIL CAP

NORTH CAROLINA PROFESSIONAL SEAL 8077 HARDY L. WILLIS ENGINEER
7/17/2018 9:13:46 AM EDT

DOCUMENT NOT CONSIDERED FINAL UNLESS ALL SIGNATURES COMPLETED

V&M
Vaughn & Melton
Consulting Engineers
Asheville, North Carolina
828-253-2796
Raleigh, NC 919-977-9455
Charlotte, NC 704-357-0488
Boone, NC 828-355-9933
Tri-Cities, TN 423-467-8401
Knoxville, TN 865-546-5800
Spartanburg, SC 864-574-4775
Charleston, SC 843-974-5650
Middlesboro, KY 606-248-6600
Atlanta, GA 770-627-3590

Copyright © 2006 Vaughn & Melton, Inc. All Rights Reserved

PROJECT NO. R-3825B
JOHNSTON COUNTY
STATION: 64+20.00 -L-

SHEET 2 OF 2

STATE OF NORTH CAROLINA
DEPARTMENT OF TRANSPORTATION
RALEIGH

STANDARD

2 BAR METAL RAIL

ASSEMBLED BY : WDC	DATE : 7/2017
CHECKED BY : ACO	DATE : 12/2017

DRAWN BY : EEM 6/94	REV. 8/16/99	MAB/LES
CHECKED BY : RGW 6/94	REV. 5/1/06R	KMM/GM
	REV. 10/1/11	MAA/GM

REVISIONS						SHEET NO.
NO.	BY:	DATE:	NO.	BY:	DATE:	S-29
1			3			TOTAL SHEETS
2			4			59

STD. NO. BMR4

SEE SHEET 2 OF 2 FOR
RAIL POSTS SPACING

NOTES

STRUCTURAL CONCRETE INSERT

THE STRUCTURAL CONCRETE INSERT ASSEMBLY SHALL CONSIST OF THE FOLLOWING COMPONENTS:

A. FERRULES SHALL BE MADE FROM STEEL MEETING THE REQUIREMENTS OF AASHTO M169, GRADE 12L14 AND SHALL HAVE A MINIMUM LENGTH OF THREADS OF 1½''.

B. 1 - ¾'' Ø X 1⅝'' BOLT WITH WASHER. BOLT SHALL CONFORM TO THE REQUIREMENTS OF ASTM A307. BOLT AND WASHER SHALL BE GALVANIZED. (AT THE CONTRACTOR'S OPTION, STAINLESS STEEL BOLT AND WASHER MAY BE USED AS AN ALTERNATE FOR THE ¾'' Ø X 1⅝'' GALVANIZED BOLT AND WASHER. THEY SHALL CONFORM TO OR EXCEED THE MECHANICAL REQUIREMENTS OF ASTM A307. THE USE OF THIS ALTERNATE SHALL BE APPROVED BY THE ENGINEER.)

C. WIRE STRUT SHOWN IN THE CONCRETE INSERT ASSEMBLY DETAIL IS THE MINIMUM ALLOWABLE SIZE AND SHALL HAVE A MINIMUM TENSILE STRENGTH OF 100,000 PSI. AS AN OPTION, A 7/16'' Ø WIRE STRUT WITH A MINIMUM TENSILE STRENGTH OF 90,000 PSI IS ACCEPTABLE.

NOTES

METAL RAIL TO END POST CONNECTION

THE METAL RAIL TO END POST CONNECTION SHALL CONSIST OF THE FOLLOWING COMPONENTS:

A. ½'' PLATES SHALL CONFORM TO AASHTO M270 GRADE 36 AND SHALL BE GALVANIZED AFTER FABRICATION.

B. ¾'' STRUCTURAL CONCRETE INSERT SHALL HAVE A WORKING LOAD SHEAR CAPACITY OF 4800 LBS. THE FERRULES SHALL ENGAGE A ¾''Ø X 1⅝'' BOLT WITH 2'' O.D. WASHER IN PLACE. THE ¾''Ø X 1⅝'' BOLT SHALL HAVE N. C. THREADS.

C. CAP SCREWS FOR RAIL ATTACHMENT TO ANGLE SHALL CONFORM TO THE REQUIREMENTS OF ASTM F593 ALLOY 305 STAINLESS STEEL. CAP SCREWS TO BE CENTERED IN SLOTS AT 60°F.

D. STANDARD CLAMP BARS (SEE METAL RAIL SHEET).

E. ½'' Ø PIPE SLEEVES (IF REQUIRED) TO BE GALVANIZED.

THE COST OF THE STANDARD CLAMP BARS AND CAP SCREWS USED IN THE METAL RAIL TO END POST CONNECTION SHALL BE INCLUDED IN THE UNIT CONTRACT PRICE BID FOR LINEAR FEET OF 1 OR 2 BAR METAL RAILS.

THE ¾'' STRUCTURAL CONCRETE INSERT WITH BOLT SHALL BE ASSEMBLED IN THE SHOP.

THE COST OF THE ¾'' STRUCTURAL CONCRETE INSERT ASSEMBLY, AND THE ½'' PLATES COMPLETE IN PLACE SHALL BE INCLUDED IN THE VARIOUS PAY ITEMS.

THE CONTRACTOR, AT HIS OPTION, MAY USE AN ADHESIVE BONDING SYSTEM IN LIEU OF THE STRUCTURAL CONCRETE INSERT EMBEDDED IN THE END POST. IF THE ADHESIVE BONDING SYSTEM IS USED, THE ¾'' Ø X 1⅝'' BOLT WITH WASHER SHALL BE REPLACED WITH A ¾''Ø X 6½'' BOLT AND 2'' O.D. WASHER. ALL SPECIFICATIONS THAT APPLY TO THE ¾'' Ø X 1⅝'' BOLT SHALL APPLY TO THE ¾''Ø X 6 ½'' BOLT. FIELD TESTING OF THE ADHESIVE BONDING SYSTEM IS NOT REQUIRED.

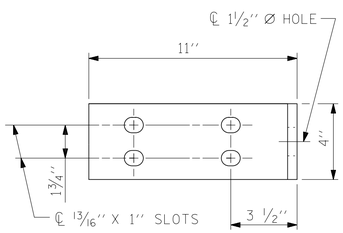

ELEVATION

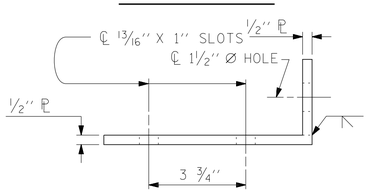

TOP VIEW

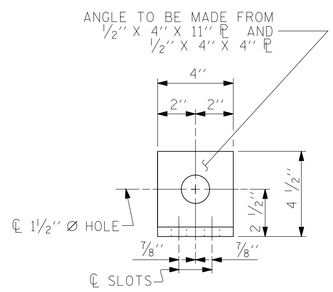

END VIEW (FIX AND EXP.)

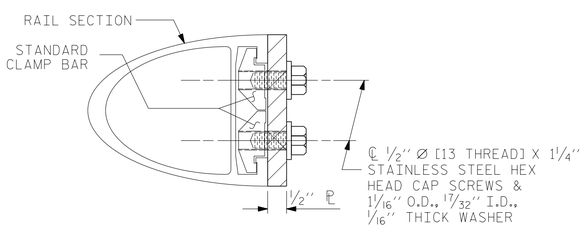

SECTION H-H (FIX)

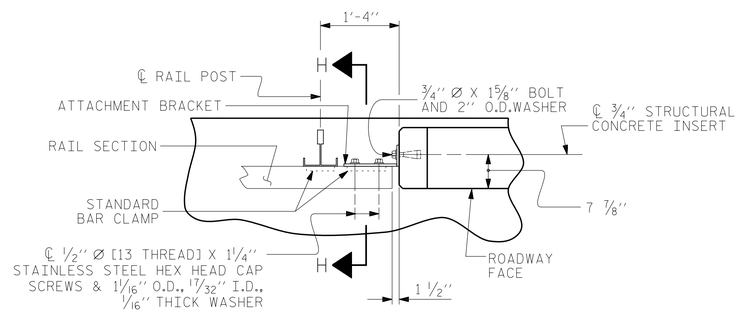

PLAN - RAIL AND END POST

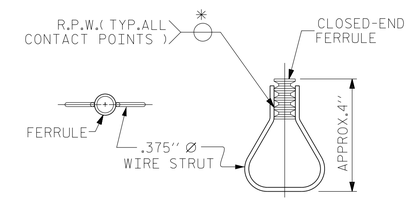

PLAN ELEVATION

STRUCTURAL CONCRETE INSERT

* EACH WELDED ATTACHMENT OF WIRE TO FERRULE SHALL DEVELOP THE TENSILE STRENGTH OF THE WIRE.

NORTH CAROLINA PROFESSIONAL ENGINEER SEAL 022877 HARDY L. WILLIS
7/17/2018 9:13:46 AM EDT

DOCUMENT NOT CONSIDERED FINAL UNLESS ALL SIGNATURES COMPLETED

PROJECT NO. R-3825B
JOHNSTON COUNTY
STATION: 64+20.00 -L-

SHEET 1 OF 2

STATE OF NORTH CAROLINA
DEPARTMENT OF TRANSPORTATION
RALEIGH

STANDARD

RAIL POST SPACINGS
AND
END OF RAIL DETAILS
FOR TWO BAR METAL RAILS

V&M
Vaughn & Melton
Consulting Engineers
Asheville, North Carolina
828-253-2796
Boone, NC 828-355-9933
Tri-Cities, TN 423-467-8401
Knoxville, TN 865-546-5800
Spartanburg, SC 864-574-4775
Charleston, SC 843-974-5650
Middlesboro, KY 606-248-6600
Atlanta, GA 770-627-3590
Raleigh, NC 919-977-9455
Charlotte, NC 704-357-0488

Copyright © 2006 Vaughn & Melton, Inc. All Rights Reserved

ASSEMBLED BY : WDC		DATE : 7/2017	
CHECKED BY : ACO		DATE : 12/2017	
DRAWN BY : FCJ 1/88	REV. 5/7/03	RWW/JTE	
CHECKED BY : CRK 3/89	REV. 5/1/06	TLA/GM	
	REV. 10/1/11	MAA/GM	

DETAILS FOR ATTACHING METAL RAIL TO END POST

REVISIONS						SHEET NO.
NO.	BY:	DATE:	NO.	BY:	DATE:	S-30
1			3			TOTAL SHEETS
2			4			59

STD. NO. BMR2

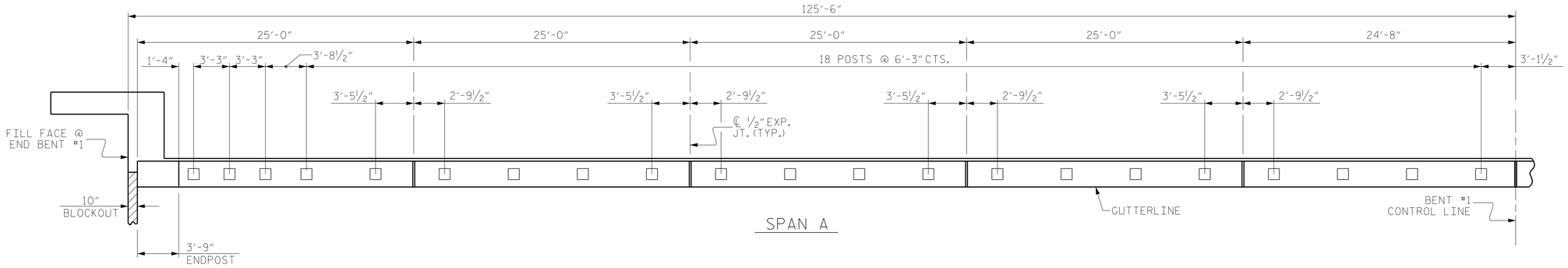

SPAN A

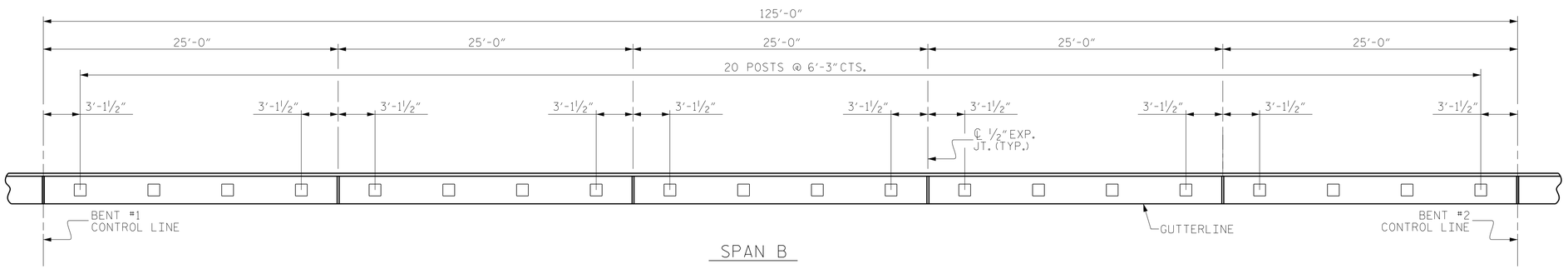

SPAN B

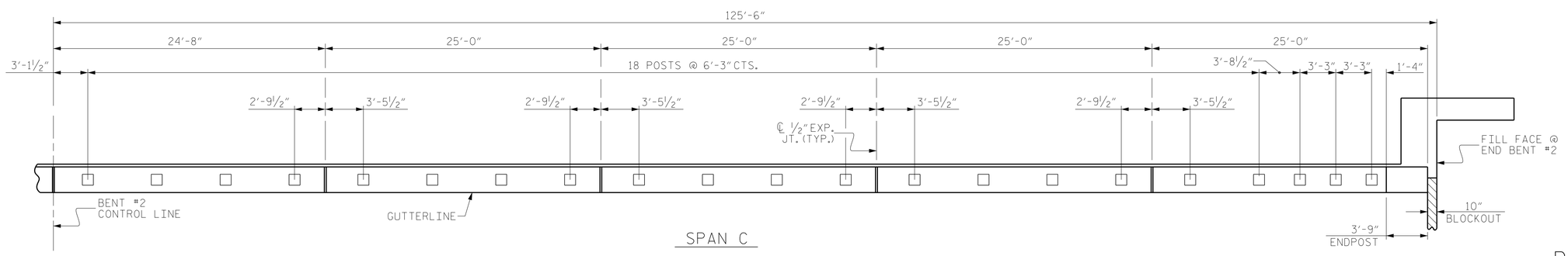

SPAN C

PLAN OF RAIL POSTS SPACING

(LEFT SIDE SHOWN, RIGHT SIDE SIMILAR)

PROJECT NO. R-3825B

JOHNSTON COUNTY

STATION: 64+20.00 -L-

SHEET 2 OF 2

STATE OF NORTH CAROLINA
DEPARTMENT OF TRANSPORTATION
RALEIGH

SUPERSTRUCTURE

RAIL POSTS SPACING

Vaughn & Melton
Consulting Engineers
Asheville, North Carolina
828-253-2796
Raleigh, NC 919-977-9455
Charlotte, NC 704-357-0488
Boone, NC 828-355-9933
Tri-Cities, TN 423-467-8401
Knoxville, TN 865-546-5800
Spartanburg, SC 864-574-4775
Charleston, SC 843-974-5650
Middlesboro, KY 606-248-6600
Atlanta, GA 770-627-3590

Copyright © 2006 Vaughn & Melton, Inc. All Rights Reserved

NORTH CAROLINA PROFESSIONAL ENGINEER HARDY L. WILLIS
Docusigned by: Hardy L. Willis 2BFF7
CC287FCF02464...
7/17/2018 9:13:46 AM EDT

DOCUMENT NOT CONSIDERED FINAL UNLESS ALL SIGNATURES COMPLETED

REVISIONS						
NO.	BY:	DATE:	NO.	BY:	DATE:	
1			3			
2			4			

SHEET NO. S-31

TOTAL SHEETS 59

DRAWN BY : WDC DATE : 7/2017
CHECKED BY : ACO DATE : 12/2017
DESIGN ENGINEER OF RECORD: ACO DATE : 12/2017

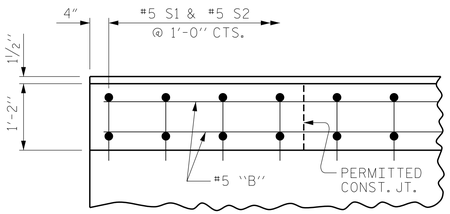

PLAN OF PARAPET

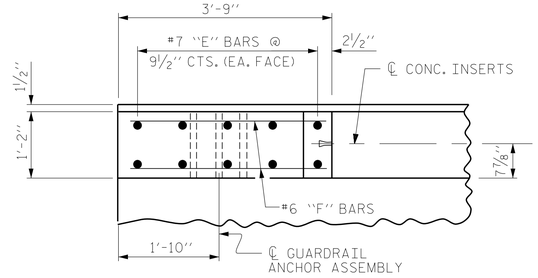

PLAN OF END POST

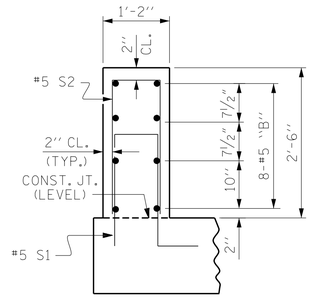

SECTION THROUGH PARAPET

NOTES

CONCRETE PARAPET IN A CONTINUOUS UNIT SHALL NOT BE CAST UNTIL ALL SLAB CONCRETE IN THE UNIT HAS BEEN CAST AND HAS REACHED A MINIMUM COMPRESSIVE STRENGTH OF 3,000 PSI.

ALL REINFORCING STEEL IN PARAPET AND END POSTS SHALL BE EPOXY COATED.

GROOVED CONTRACTION JOINTS, ½" IN DEPTH, SHALL BE TOOLED IN ALL EXPOSED FACES OF THE PARAPET AND IN ACCORDANCE WITH ARTICLE 825-10(B) OF THE STANDARD SPECIFICATIONS. A CONTRACTION JOINT SHALL BE LOCATED AT EACH THIRD POINT BETWEEN PARAPET EXPANSION JOINTS. ONLY ONE CONTRACTION JOINT IS REQUIRED AT MIDPOINT OF PARAPET SEGMENTS LESS THAN 20 FEET IN LENGTH AND NO CONTRACTION JOINTS ARE REQUIRED FOR THOSE SEGMENTS LESS THAN 10 FEET IN LENGTH.

FOR DETAILS OF CONCRETE INSERTS IN END POSTS, SEE "RAIL POST SPACINGS AND END OF RAIL DETAILS" SHEET.

FOR LOCATION OF GUARDRAIL ANCHOR ASSEMBLIES, SEE "GUARDRAIL ANCHORAGE DETAILS FOR METAL RAILS" SHEET.

BAR TYPES

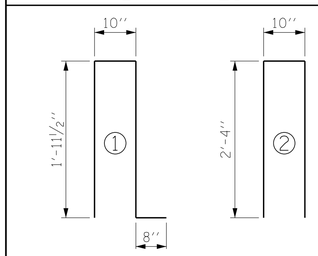

ALL BAR DIMENSIONS ARE OUT TO OUT.

BILL OF MATERIAL

2 PARAPETS AND 4 END POSTS

BAR	NO.	SIZE	TYPE	LENGTH	WEIGHT
* B1	208	#5	STR	24'-8"	5351
* B2	32	#5	STR	24'-4"	812
* E1	8	#7	STR	2'-6"	41
* E2	8	#7	STR	3'-0"	49
* E3	8	#7	STR	3'-6"	57
* E4	8	#7	STR	4'-0"	65
* E5	8	#7	STR	4'-4"	71
* F1	8	#6	STR	1'-10"	22
* F2	8	#6	STR	2'-10"	34
* F3	8	#6	STR	3'-6"	42
* S1	750	#5	1	5'-5"	4237
* S2	750	#5	2	5'-6"	4302

* EPOXY COATED REINFORCING STEEL	LBS.	15,083
CLASS AA CONCRETE	CU. YDS.	83.3
1'-2" X 2'-6" CONCRETE PARAPET	LIN. FT.	748.67

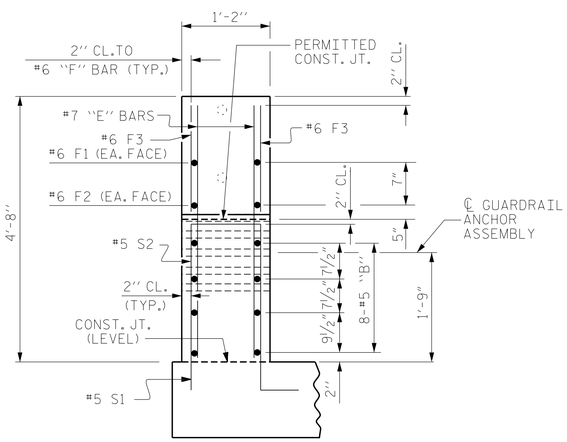

END VIEW

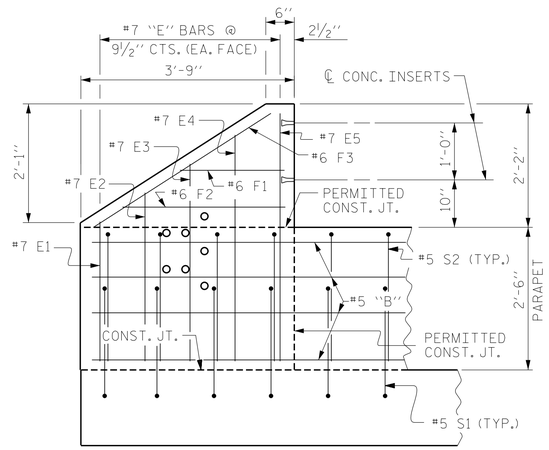

ELEVATION

PARAPET AND END POST FOR TWO BAR RAIL

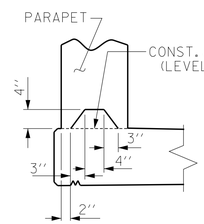

SECTION S-S

AT DAM IN OPEN JOINT
(THIS IS TO BE USED ONLY
WHEN SLIP FORM IS USED)

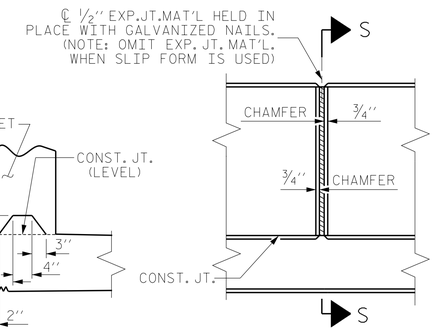

ELEVATION AT
EXPANSION JOINTS

CONCRETE PARAPET DETAILS

V&M
Vaughn & Melton
Consulting Engineers
Asheville, North Carolina
828-253-2796
Raleigh, NC 919-977-9455
Charlotte, NC 704-357-0488
Boone, NC 828-355-9933
Tri-Cities, TN 423-467-8401
Knoxville, TN 865-546-5800
Spartanburg, SC 864-574-4775
Charleston, SC 843-974-5650
Middlesboro, KY 606-248-6600
Atlanta, GA 770-627-3590

Copyright © 2006 Vaughn & Melton, Inc. All Rights Reserved

NORTH CAROLINA PROFESSIONAL SEAL ENGINEER HARDY L. WILLIS
Digitally signed by Hardy Willis
DN: cn=Hardy Willis, c=US, o=Vaughn & Melton, ou=Engineering, email=hwillis@v-m.com, C=US
2007.05.09 08:38:41 -05'00'
(CC2875CC2C1C2B)

7/17/2018 9:13:46 AM EDT

DOCUMENT NOT CONSIDERED FINAL UNLESS ALL SIGNATURES COMPLETED

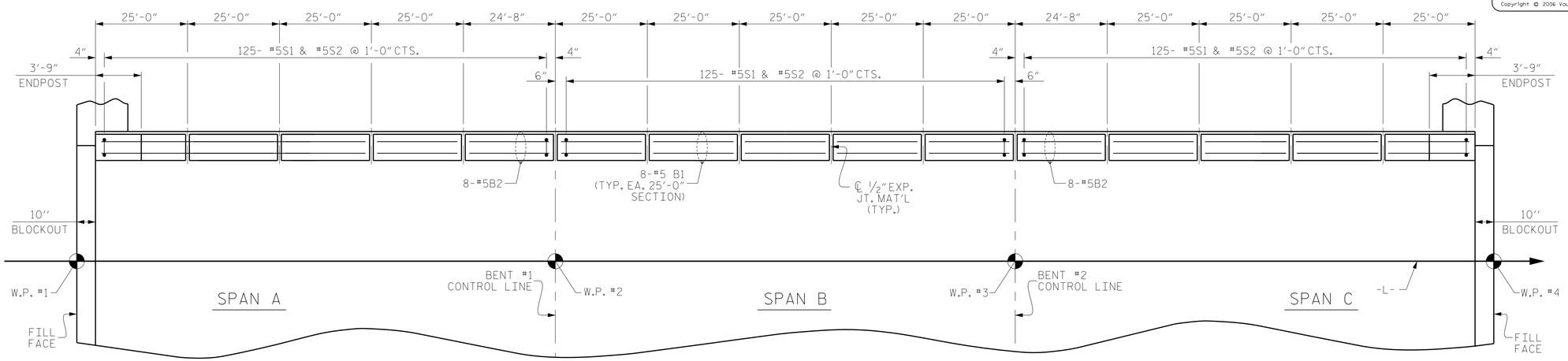

PLAN OF PARAPET

(LEFT SIDE SHOWN, RIGHT SIDE SIMILAR)

PROJECT NO. R-3825B

JOHNSTON COUNTY

STATION: 64+20.00 -L-

STATE OF NORTH CAROLINA
DEPARTMENT OF TRANSPORTATION
RALEIGH

SUPERSTRUCTURE

CONCRETE PARAPET
AND
END POST DETAILS

REVISIONS						SHEET NO.
NO.	BY:	DATE:	NO.	BY:	DATE:	S-32
1			3			TOTAL SHEETS
2			4			59

DRAWN BY :	WDC	DATE :	7-2017
CHECKED BY :	ACO	DATE :	12-2017

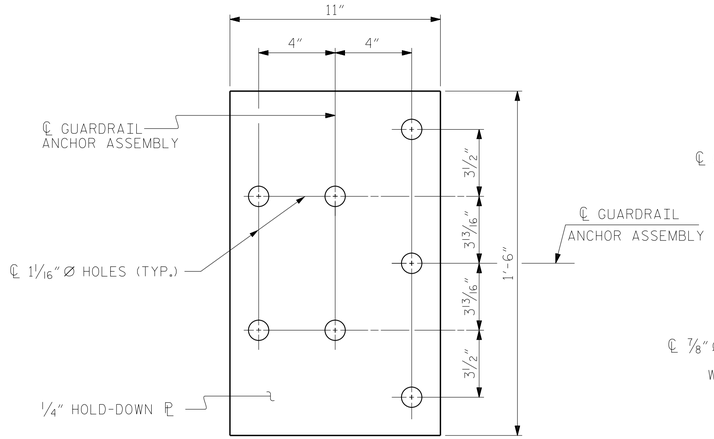

PLAN

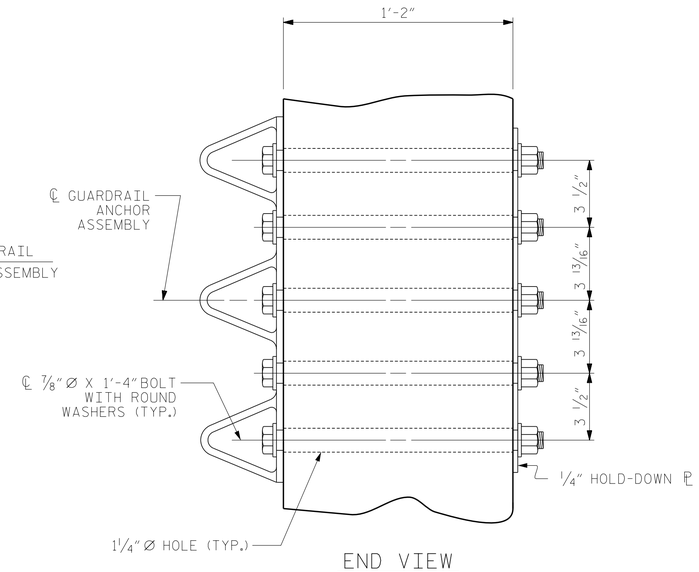

END VIEW

GUARDRAIL ANCHOR ASSEMBLY DETAILS

NOTES

THE GUARDRAIL ANCHOR ASSEMBLY SHALL CONSIST OF A 1/4" HOLD DOWN PLATE AND 7 - 7/8" Ø BOLTS WITH NUTS AND WASHERS.

THE HOLD-DOWN PLATE SHALL CONFORM TO AASHTO M270 GRADE 36. AFTER FABRICATION, THE HOLD-DOWN PLATE SHALL BE HOT-DIP GALVANIZED IN ACCORDANCE WITH AASHTO M111.

BOLTS SHALL CONFORM TO THE REQUIREMENTS OF ASTM A307 AND NUTS SHALL CONFORM TO THE REQUIREMENTS OF AASHTO M291. BOLTS, NUTS AND WASHERS SHALL BE GALVANIZED. AT THE CONTRACTOR'S OPTION, STAINLESS STEEL BOLTS, NUTS AND WASHERS MAY BE USED AS AN ALTERNATE FOR THE 7/8" Ø GALVANIZED BOLTS, NUTS AND WASHERS. THEY SHALL CONFORM TO OR EXCEED THE MECHANICAL REQUIREMENTS OF ASTM A307. THE USE OF THIS ALTERNATE SHALL BE APPROVED BY THE ENGINEER.

THE GUARDRAIL ANCHOR ASSEMBLY IS REQUIRED AT ALL POINTS WHERE APPROACH GUARDRAIL IS TO BE ATTACHED TO THE END OF THE PARAPET. FOR POINTS OF ATTACHMENT, SEE SKETCH.

AFTER INSTALLATION, THE EXPOSED THREAD OF THE BOLT SHALL BE BURRED WITH A SHARP POINTED TOOL.

THE COST OF THE GUARDRAIL ANCHOR ASSEMBLIES WITH BOLTS, NUTS AND WASHERS COMPLETE IN PLACE, SHALL BE INCLUDED IN THE VARIOUS PAY ITEMS.

THE VERTICAL REINFORCING BARS MAY BE SHIFTED SLIGHTLY IN THE END POST TO CLEAR ASSEMBLY BOLTS.

THE 1 1/4" Ø HOLES SHALL BE FORMED OR DRILLED WITH A CORE BIT. IMPACT TOOLS WILL NOT BE PERMITTED. ANY CONCRETE DAMAGED BY THIS WORK SHALL BE REPAIRED TO THE SATISFACTION OF THE ENGINEER.

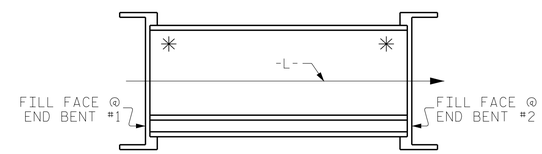

SKETCH SHOWING POINTS OF ATTACHMENT

✳ LOCATION OF GUARDRAIL ATTACHMENT

NORTH CAROLINA PROFESSIONAL SEAL ENGINEER HARDY L. WILLIS
7/17/2018 9:13:46 AM EDT

DOCUMENT NOT CONSIDERED FINAL UNLESS ALL SIGNATURES COMPLETED

V&M
Vaughn & Melton
Consulting Engineers
Asheville, North Carolina
828-253-2796
Raleigh, NC 919-977-9455
Charlotte, NC 704-357-0488
Boone, NC 828-355-9933
Tri-Cities, TN 423-467-8401
Knoxville, TN 865-546-5800
Spartanburg, SC 864-574-4775
Charleston, SC 843-974-5650
Middlesboro, KY 606-248-6600
Atlanta, GA 770-627-3590

Copyright © 2006 Vaughn & Melton, Inc. All Rights Reserved

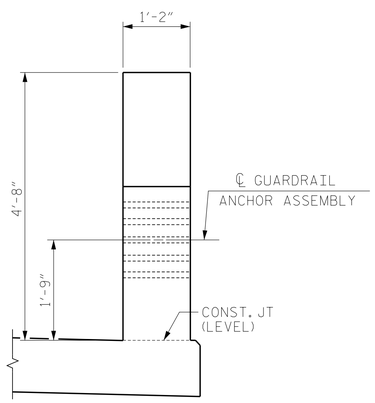

END VIEW
(TWO BAR METAL RAIL)

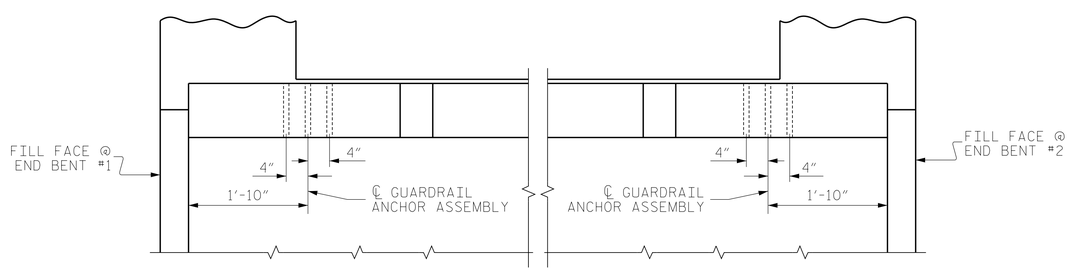

PLAN

LOCATION OF GUARDRAIL ANCHOR AT END POST

PROJECT NO. R-3825B
JOHNSTON COUNTY
STATION: 64+20.00 -L-

STATE OF NORTH CAROLINA
DEPARTMENT OF TRANSPORTATION
RALEIGH
STANDARD

GUARDRAIL ANCHORAGE DETAILS FOR 2-BAR METAL RAIL

ASSEMBLED BY : WDC	DATE : 7/2017
CHECKED BY : ACO	DATE : 12/2017
DRAWN BY : MAA 5/10	REV. 12/5/11 MAA/GM
CHECKED BY : GM 5/10	REV. 6/13 MAA/GM
	REV. 1/15 MAA/TMG

REVISIONS

NO.	BY:	DATE:	NO.	BY:	DATE:
1			3		
2			4		

SHEET NO. S-33
TOTAL SHEETS 59

STD. NO. GRA3

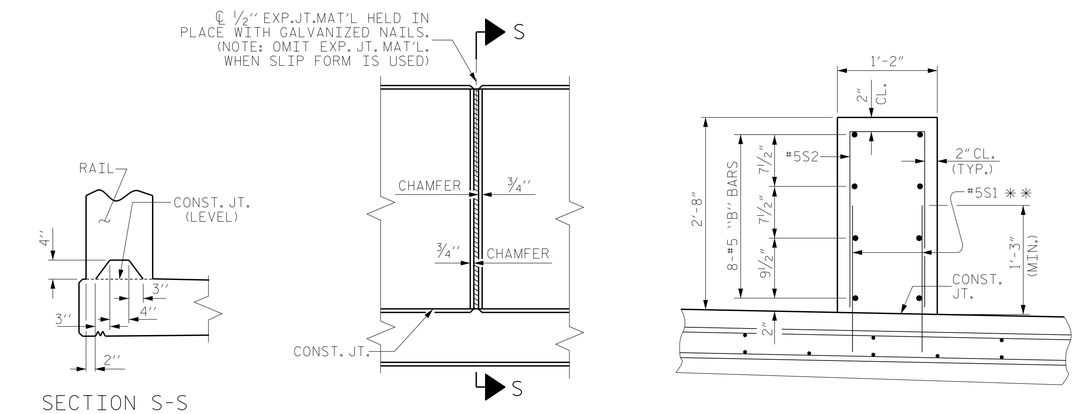

SECTION S-S
AT DAM IN OPEN JOINT
(THIS IS TO BE USED ONLY WHEN SLIP FORM IS USED)

ELEVATION AT EXPANSION JOINTS

SECTION THROUGH RAIL

1'-2" X 2'-8" CONCRETE PARAPET DETAILS

NOTES

THE PARAPET IN A CONTINUOUS UNIT SHALL NOT BE CAST UNTIL ALL SLAB CONCRETE IN THE UNIT HAS BEEN CAST AND HAS REACHED A MINIMUM COMPRESSIVE STRENGTH OF 3,000 PSI.

ALL REINFORCING STEEL IN THE PARAPET SHALL BE EPOXY COATED.

GROOVED CONTRACTION JOINTS, 1/2" IN DEPTH, SHALL BE TOOLED IN ALL EXPOSED FACES OF THE PARAPET AND IN ACCORDANCE WITH ARTICLE 825-10(B) OF THE STANDARD SPECIFICATIONS. A CONTRACTION JOINT SHALL BE LOCATED AT EACH THIRD POINT BETWEEN PARAPET EXPANSION JOINTS. ONLY ONE CONTRACTION JOINT IS REQUIRED AT MIDPOINT OF RAIL SEGMENTS LESS THAN 20 FEET IN LENGTH AND NO CONTRACTION JOINTS ARE REQUIRED FOR THOSE SEGMENTS LESS THAN 10 FEET IN LENGTH.

FOR LOCATION OF GUARDRAIL ANCHOR ASSEMBLIES, SEE "GUARDRAIL ANCHORAGE DETAILS FOR 1'-2" X 2'-8" CONCRETE PARAPET" SHEET.

** THE CONTRACTOR SHALL USE ADHESIVELY ANCHORED #5S1 BARS. LEVEL 2 FIELD TESTING IS REQUIRED, AND THE YIELD LOAD OF THE #5S1 IS 18.6 KIPS. FOR ADHESIVELY ANCHORED ANCHOR BOLTS OR DOWELS, SEE STANDARD SPECIFICATIONS.

BAR TYPE

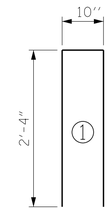

ALL BAR DIMENSIONS ARE OUT TO OUT.

BILL OF MATERIAL

1'-2" X 2'-8" CONCRETE PARAPET

BAR	NO.	SIZE	TYPE	LENGTH	WEIGHT
* B1	104	#5	STR	24'-8"	2676
* B2	16	#5	STR	24'-4"	406
* S1	750	#5	STR	1'-9"	1369
* S2	375	#5	1	5'-6"	2151

* EPOXY COATED REINFORCING STEEL	LBS.	6,602
CLASS AA CONCRETE	CU. YDS.	43.1
1'-2" X 2'-8" CONCRETE PARAPET	LIN. FT.	374.33

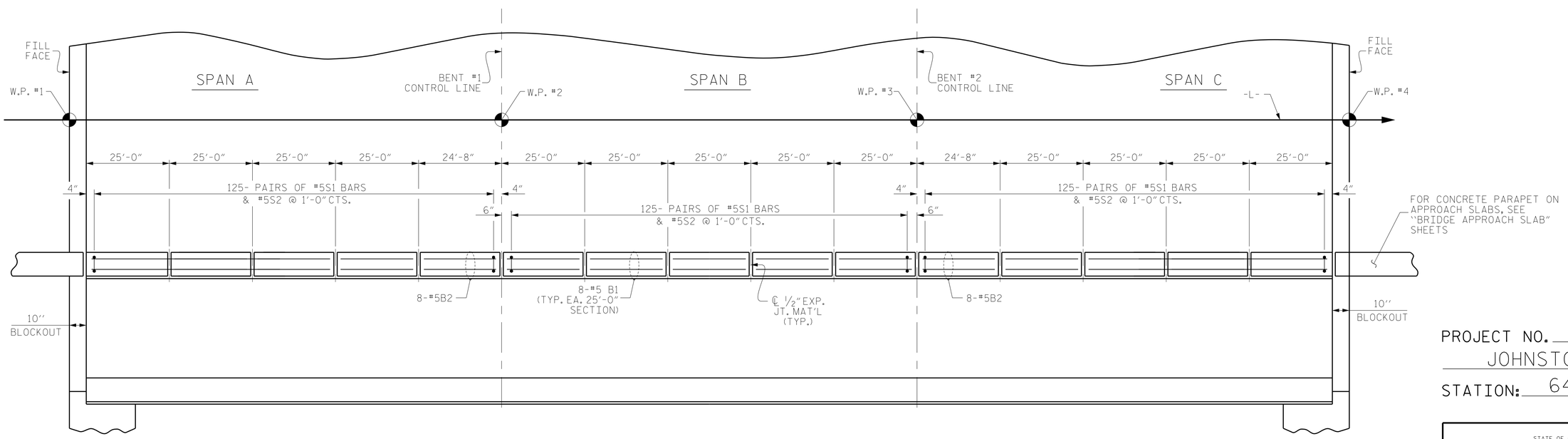

PLAN

PROJECT NO. R-3825B
JOHNSTON COUNTY
STATION: 64+20.00 -L-

STATE OF NORTH CAROLINA
DEPARTMENT OF TRANSPORTATION
RALEIGH

SUPERSTRUCTURE

1'-2" X 2'-8"
CONCRETE PARAPET

V&M
Vaughn & Melton
Consulting Engineers
Asheville, North Carolina
828-253-2796
Raleigh, NC 919-977-9455
Charlotte, NC 704-357-0488
Boone, NC 828-355-9933
Tri-Cities, TN 423-467-8401
Knoxville, TN 865-546-5800
Spartanburg, SC 864-574-4775
Charleston, SC 843-974-5650
Middlesboro, KY 606-248-6600
Atlanta, GA 770-627-3590

Copyright © 2006 Vaughn & Melton, Inc. All Rights Reserved

NORTH CAROLINA PROFESSIONAL ENGINEER SEAL HARDY L. WILLIS
P.E. Project Engineer
Hardy L. Willis
CC2017-020461
7/17/2018 9:13:46 AM EDT

DOCUMENT NOT CONSIDERED FINAL UNLESS ALL SIGNATURES COMPLETED

REVISIONS							
NO.	BY:	DATE:	NO.	BY:	DATE:	SHEET NO.	S-34
1			3			TOTAL SHEETS	59
2			4				

DRAWN BY : WDC DATE : 7-2017
CHECKED BY : ACO DATE : 12-2017

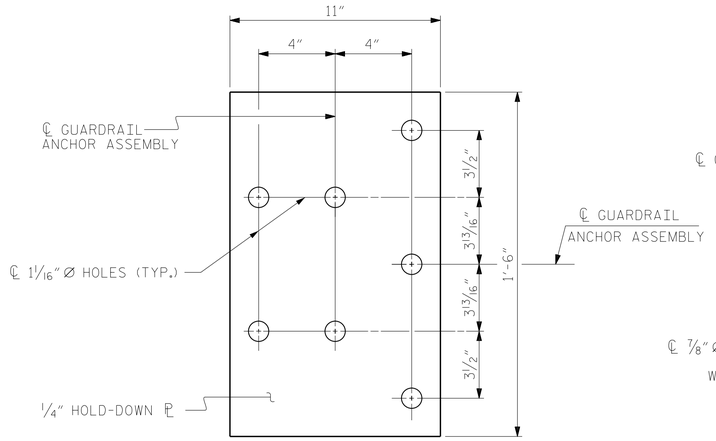

PLAN

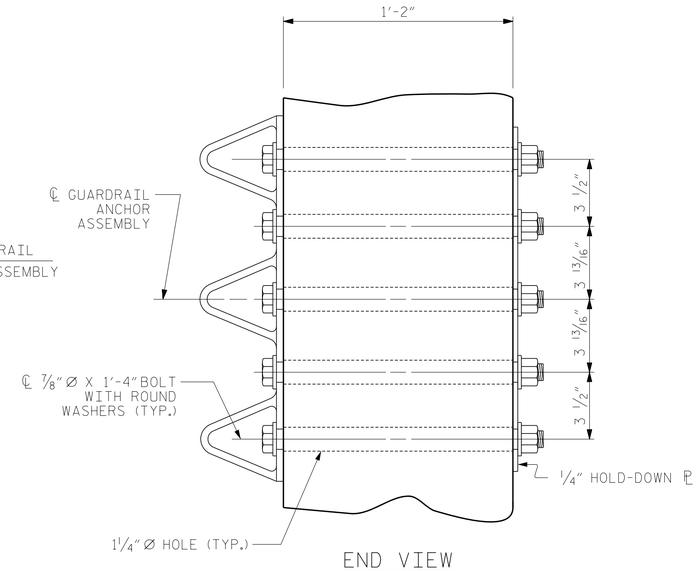

END VIEW

GUARDRAIL ANCHOR ASSEMBLY DETAILS

NOTES

THE GUARDRAIL ANCHOR ASSEMBLY SHALL CONSIST OF A 1/4" HOLD DOWN PLATE AND 7 - 7/8" Ø BOLTS WITH NUTS AND WASHERS.

THE HOLD-DOWN PLATE SHALL CONFORM TO AASHTO M270 GRADE 36. AFTER FABRICATION, THE HOLD-DOWN PLATE SHALL BE HOT-DIP GALVANIZED IN ACCORDANCE WITH AASHTO M111.

BOLTS SHALL CONFORM TO THE REQUIREMENTS OF ASTM A307 AND NUTS SHALL CONFORM TO THE REQUIREMENTS OF AASHTO M291. BOLTS, NUTS AND WASHERS SHALL BE GALVANIZED. AT THE CONTRACTOR'S OPTION, STAINLESS STEEL BOLTS, NUTS AND WASHERS MAY BE USED AS AN ALTERNATE FOR THE 7/8" Ø GALVANIZED BOLTS, NUTS AND WASHERS. THEY SHALL CONFORM TO OR EXCEED THE MECHANICAL REQUIREMENTS OF ASTM A307. THE USE OF THIS ALTERNATE SHALL BE APPROVED BY THE ENGINEER.

THE GUARDRAIL ANCHOR ASSEMBLY IS REQUIRED AT ALL POINTS WHERE APPROACH GUARDRAIL IS TO BE ATTACHED TO THE END OF THE CONCRETE PARAPET. FOR POINTS OF ATTACHMENT, SEE SKETCH.

AFTER INSTALLATION, THE EXPOSED THREAD OF THE BOLT SHALL BE BURRED WITH A SHARP POINTED TOOL.

THE COST OF THE GUARDRAIL ANCHOR ASSEMBLIES WITH BOLTS, NUTS AND WASHERS COMPLETE IN PLACE, SHALL BE INCLUDED IN THE VARIOUS PAY ITEMS.

THE VERTICAL REINFORCING BARS MAY BE SHIFTED SLIGHTLY IN THE RAIL TO CLEAR ASSEMBLY BOLTS.

THE 1 1/4" Ø HOLES SHALL BE FORMED OR DRILLED WITH A CORE BIT. IMPACT TOOLS WILL NOT BE PERMITTED. ANY CONCRETE DAMAGED BY THIS WORK SHALL BE REPAIRED TO THE SATISFACTION OF THE ENGINEER.

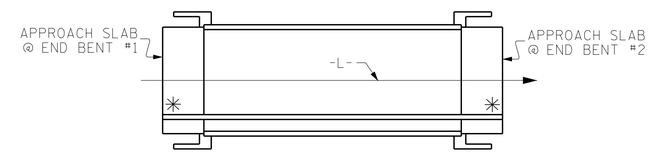

SKETCH SHOWING POINTS OF ATTACHMENT

✳ LOCATION OF GUARDRAIL ATTACHMENT

NORTH CAROLINA PROFESSIONAL SEAL ENGINEER HARDY L. WILLIS

7/17/2018 9:13:46 AM EDT

DOCUMENT NOT CONSIDERED FINAL UNLESS ALL SIGNATURES COMPLETED

V&M Vaughn & Melton Consulting Engineers
Asheville, North Carolina 828-253-2796
Raleigh, NC 919-977-9455
Charlotte, NC 704-357-0488
Boone, NC 828-355-9933
Tri-Cities, TN 423-467-8401
Knoxville, TN 865-546-5800
Spartanburg, SC 864-574-4775
Charleston, SC 843-974-5650
Middlesboro, KY 606-248-6600
Atlanta, GA 770-627-3590

Copyright © 2006 Vaughn & Melton, Inc. All Rights Reserved

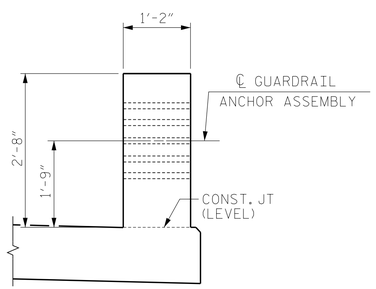

END VIEW

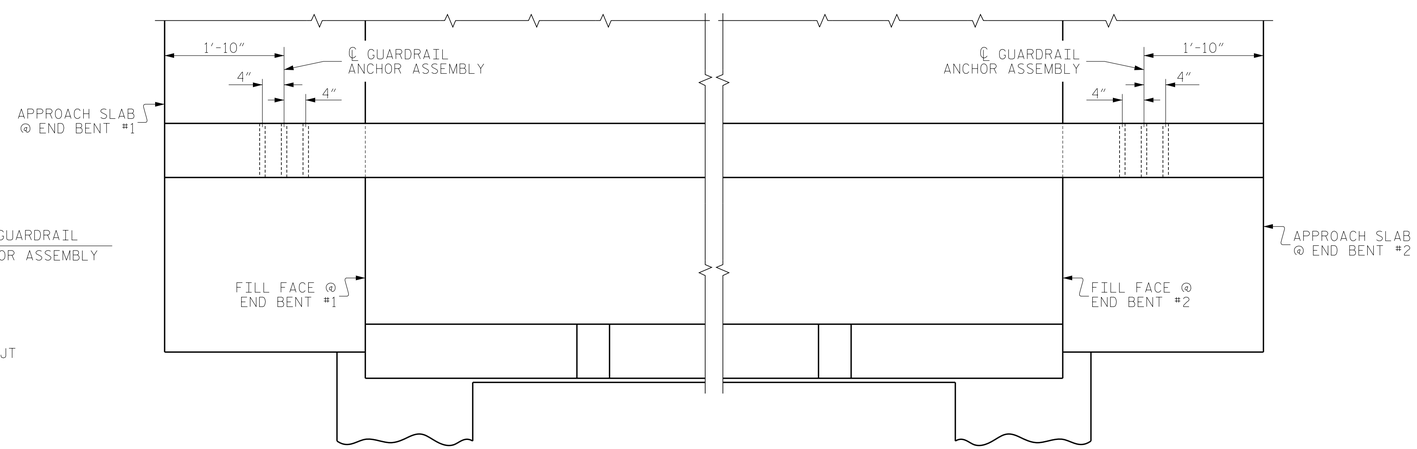

PLAN

LOCATION OF GUARDRAIL ANCHOR AT END OF 1'-2" X 2'-8" CONCRETE PARAPET

PROJECT NO. R-3825B

JOHNSTON COUNTY

STATION: 64+20.00 -L-

STATE OF NORTH CAROLINA
DEPARTMENT OF TRANSPORTATION
RALEIGH

GUARDRAIL ANCHORAGE DETAILS FOR 1'-2" X 2'-8" CONCRETE PARAPET

REVISIONS						SHEET NO.
NO.	BY:	DATE:	NO.	BY:	DATE:	S-35
1			3			TOTAL SHEETS
2			4			59

ASSEMBLED BY : WDC DATE : 7/2017
CHECKED BY : ACO DATE : 12/2017

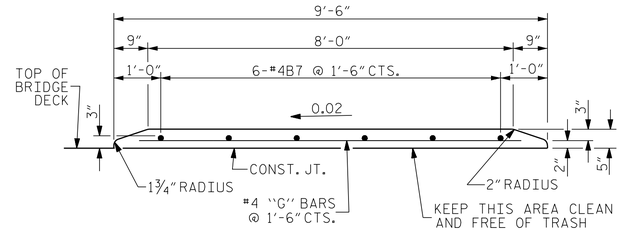

SECTION THRU MEDIAN

BILL OF MATERIAL CONCRETE MEDIAN					
BAR	NO.	SIZE	TYPE	LENGTH	WEIGHT
✳ B7	84	#4	STR	28'-7"	1604
✳ G1	2	#4	STR	8'-9"	12
✳ G2	2	#4	STR	8'-6"	11
✳ G3	221	#4	STR	8'-5"	1243
✳ G4	5	#4	STR	8'-2"	27
✳ G5	5	#4	STR	8'-0"	27
✳ G6	5	#4	STR	7'-9"	26
✳ G7	5	#4	STR	7'-7"	25
✳ G8	5	#4	STR	7'-4"	24
✳ EPOXY COATED REINF. STEEL					2,999 LBS.
CLASS AA CONCRETE					52.0 C.Y.

NOTES

CONCRETE MEDIAN IN A CONTINUOUS UNIT SHALL NOT BE CAST UNTIL ALL SLAB CONCRETE IN THE UNIT HAS BEEN CAST AND HAS REACHED A MINIMUM COMPRESSIVE STRENGTH OF 3,000 PSI.

ALL REINFORCING STEEL IN THE CONCRETE MEDIAN SHALL BE EPOXY COATED.

GROOVED CONTRACTION JOINTS, ½" IN DEPTH, SHALL BE TOOLED IN ALL EXPOSED FACES OF THE MEDIAN AND IN ACCORDANCE WITH ARTICLE 825-10(B) OF THE STANDARD SPECIFICATIONS. A CONTRACTION JOINT SHALL BE LOCATED AT EACH THIRD POINT BETWEEN MEDIAN EXPANSION JOINTS. ONLY ONE CONTRACTION JOINT IS REQUIRED AT MIDPOINT OF MEDIAN SEGMENTS LESS THAN 20 FEET IN LENGTH AND NO CONTRACTION JOINTS ARE REQUIRED FOR THOSE SEGMENTS LESS THAN 10 FEET IN LENGTH.

FOR CONCRETE MEDIAN REINFORCING STEEL AND CONCRETE QUANTITIES, SEE SUPERSTRUCTURE "BILL OF MATERIAL".

THE COST FOR MATERIALS AND PLACEMENT OF THE CONCRETE MEDIAN SHALL BE INCLUDED IN THE PAY ITEM FOR "REINFORCED CONCRETE DECK SLAB".

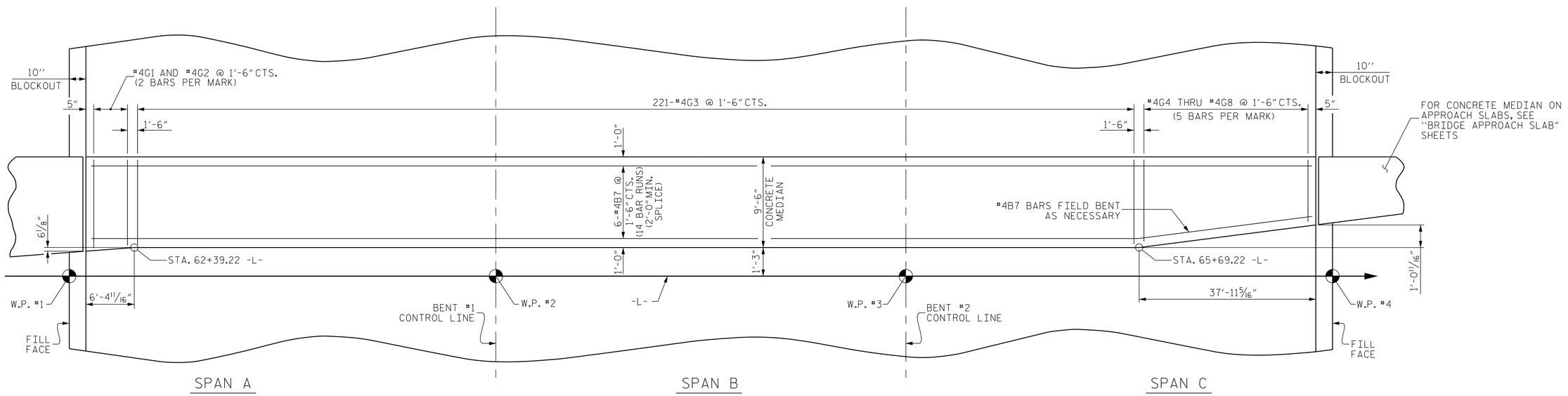

PLAN

PROJECT NO. R-3825B

JOHNSTON COUNTY

STATION: 64+20.00 -L-

STATE OF NORTH CAROLINA
DEPARTMENT OF TRANSPORTATION
RALEIGH

SUPERSTRUCTURE

CONCRETE MEDIAN

Vaughn & Melton
Consulting Engineers
Asheville, North Carolina
828-253-2796
Raleigh, NC 919-977-9455
Charlotte, NC 704-357-0488
Boone, NC 828-355-9933
Tri-Cities, TN 423-467-8401
Knoxville, TN 865-546-5800
Spartanburg, SC 864-574-4775
Charleston, SC 843-974-5650
Middlesboro, KY 606-248-6600
Atlanta, GA 770-627-3590

Copyright © 2006 Vaughn & Melton, Inc. All Rights Reserved

NORTH CAROLINA PROFESSIONAL ENGINEER SEAL 027711 HARDY L. WILLIS
Electronically Signed by HARDY L. WILLIS
7/17/2018 9:13:46 AM EDT

DOCUMENT NOT CONSIDERED FINAL UNLESS ALL SIGNATURES COMPLETED

REVISIONS						SHEET NO.
NO.	BY:	DATE:	NO.	BY:	DATE:	S-36
1			3			TOTAL SHEETS
2			4			59

DRAWN BY : WDC DATE : 7-2017
CHECKED BY : ACO DATE : 12-2017

BILL OF MATERIAL
STAGE I

BAR	NO.	SIZE	TYPE	LENGTH	WEIGHT
✳ A1	599	#5	STR	51'-7"	32,227
A2	599	#5	STR	51'-7"	32,227
✳ B1	210	#4	STR	21'-4"	2,993
✳ B2	206	#6	STR	25'-0"	7,735
B3	602	#5	STR	28'-9"	18,052
✳ B4	210	#6	STR	32'-8"	10,304
✳ B5	136	#6	STR	37'-8"	7,694
✳ B6	70	#4	STR	21'-10"	1,029
✳ D1	599	#5	STR	6'-9"	4,217
D2	599	#5	STR	6'-9"	4,217
K1	28	#4	STR	27'-10"	521
K2	10	#4	STR	7'-1"	47
K3	50	#4	STR	8'-8"	289
K4	10	#4	STR	5'-6"	37
K5	2	#4	STR	2'-7"	3
K6	10	#4	STR	3'-5"	23
K7	2	#4	STR	1'-10"	2
K8	20	#4	STR	6'-0"	80
K9	100	#4	STR	8'-8"	579
K10	20	#4	STR	5'-8"	76
K11	28	#4	STR	25'-10"	483
S1	64	#4	4	14'-5"	616
S2	22	#4	4	12'-1"	178
✳ S3	64	#4	1	11'-11"	509
✳ S4	62	#4	1	10'-3"	425
S5	420	#4	5	2'-9"	772
U1	60	#4	3	16'-6"	661
U2	20	#4	2	10'-11"	146
REINFORCING STEEL					59,009 LBS.
✳ EPOXY COATED REINF. STEEL					67,133 LBS.

BILL OF MATERIAL
STAGE II

BAR	NO.	SIZE	TYPE	LENGTH	WEIGHT
✳ A3	599	#5	STR	44'-5"	27,750
A4	599	#5	STR	44'-5"	27,750
✳ B1	156	#4	STR	21'-4"	2,223
✳ B2	152	#6	STR	25'-0"	5,708
B3	434	#5	STR	28'-9"	13,014
✳ B4	156	#6	STR	32'-8"	7,654
✳ B5	100	#6	STR	37'-8"	5,658
✳ B6	52	#4	STR	21'-10"	758
✳ D1	599	#5	STR	6'-9"	4,217
D2	599	#5	STR	6'-9"	4,217
K12	28	#4	STR	21'-6"	402
K13	8	#4	STR	6'-2"	33
K14	40	#4	STR	7'-9"	207
K15	8	#4	STR	4'-9"	25
K16	2	#4	STR	2'-8"	4
K17	10	#4	STR	3'-6"	23
K18	2	#4	STR	1'-10"	2
K19	16	#4	STR	5'-1"	54
K20	80	#4	STR	7'-9"	414
K21	16	#4	STR	4'-8"	50
K22	28	#4	STR	18'-4"	343
S1	44	#4	4	14'-5"	424
S2	18	#4	4	12'-1"	145
✳ S3	44	#4	1	11'-11"	350
✳ S4	42	#4	1	10'-3"	288
S5	336	#4	5	2'-9"	617
U1	48	#4	3	16'-6"	529
U2	16	#4	2	10'-11"	117
REINFORCING STEEL					48,370 LBS.
✳ EPOXY COATED REINF. STEEL					54,606 LBS.

BILL OF MATERIAL
CLOSURE POUR

BAR	NO.	SIZE	TYPE	LENGTH	WEIGHT
✳ B1	24	#4	STR	21'-4"	342
✳ B2	20	#6	STR	25'-0"	751
B3	42	#5	STR	28'-9"	1,259
✳ B4	24	#6	STR	32'-8"	1,178
✳ B5	12	#6	STR	37'-8"	679
✳ B6	8	#4	STR	21'-10"	117
K23	4	#4	STR	3'-6"	9
K24	20	#4	STR	5'-1"	68
K25	4	#4	STR	2'-1"	6
K26	4	#4	STR	2'-3"	6
K27	20	#4	STR	5'-1"	68
K28	4	#4	STR	2'-1"	6
S1	6	#4	4	14'-5"	58
✳ S3	6	#4	1	11'-11"	48
✳ S4	6	#4	1	10'-3"	41
S5	48	#4	5	2'-9"	88
U1	6	#4	3	16'-6"	66
U2	4	#4	2	10'-11"	29
REINFORCING STEEL					1,663 LBS.
✳ EPOXY COATED REINF. STEEL					3,156 LBS.

BAR TYPES

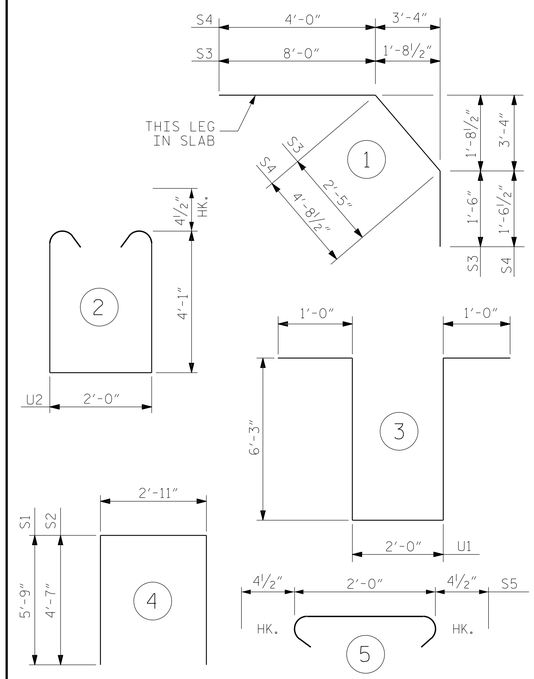

ALL BAR DIMENSIONS ARE OUT TO OUT

SUPERSTRUCTURE BILL OF MATERIAL

	CLASS AA CONCRETE	REINFORCING STEEL	EPOXY COATED REINFORCING STEEL
	(CU. YDS.)	(LBS.)	(LBS.)
POUR 1	196.7	——	——
POUR 2	243.8	——	——
POUR 3	245.2	——	——
POUR 4	95.4	——	——
POUR 5	148.9	——	——
POUR 6	183.6	——	——
POUR 7	184.7	——	——
POUR 8	70.0	——	——
POUR 9	88.9	——	——
TOTALS✳✳	1457.2	109,042	124,895

✳✳ QUANTITIES FOR PARAPETS AND END POSTS ARE NOT INCLUDED.

SUPERSTRUCTURE REINFORCING STEEL LENGTHS ARE BASED ON THE FOLLOWING MINIMUM SPLICE LENGTHS

BAR SIZE	SUPERSTRUCTURE EXCEPT APPROACH SLABS, PARAPET, AND BARRIER RAIL		APPROACH SLABS		PARAPET AND BARRIER RAIL
	EPOXY COATED	UNCOATED	EPOXY COATED	UNCOATED	
#4	2'-0"	1'-9"	2'-0"	1'-9"	2'-9"
#5	2'-6"	2'-2"	2'-6"	2'-2"	3'-5"
#6	3'-0"	2'-7"	3'-10"	2'-7"	4'-4"
#7	5'-3"	3'-6"			
#8	6'-10"	4'-7"			

GROOVING BRIDGE FLOORS

STAGE I		
APPROACH SLABS	2,058	SQ.FT.
BRIDGE DECK	15,708	SQ.FT.
TOTAL	17,766	SQ.FT.

STAGE II		
APPROACH SLABS	1,458	SQ.FT.
BRIDGE DECK	11,594	SQ.FT.
TOTAL	13,052	SQ.FT.

TOTAL		
APPROACH SLABS	3,516	SQ.FT.
BRIDGE DECK	27,302	SQ.FT.
TOTAL	30,818	SQ.FT.

PROJECT NO. R-3825B
JOHNSTON COUNTY
STATION: 64+20.00 -L-

Vaughn & Melton
Consulting Engineers
Asheville, North Carolina
828-253-2796
Raleigh, NC 919-977-9455
Charlotte, NC 704-357-0488
Boone, NC 828-355-9933
Tri-Cities, TN 423-467-8401
Knoxville, TN 865-546-5800
Spartanburg, SC 864-574-4775
Charleston, SC 843-974-5650
Middlesboro, KY 606-248-6600
Atlanta, GA 770-627-3590

Copyright © 2006 Vaughn & Melton, Inc. All Rights Reserved

NORTH CAROLINA PROFESSIONAL SEAL ENGINEER HARDY L. WILLIS
7/17/2018 9:13:46 AM EDT

DOCUMENT NOT CONSIDERED FINAL UNLESS ALL SIGNATURES COMPLETED

STATE OF NORTH CAROLINA
DEPARTMENT OF TRANSPORTATION
RALEIGH

SUPERSTRUCTURE
BILL OF MATERIAL

REVISIONS							SHEET NO.
NO.	BY:	DATE:	NO.	BY:	DATE:		S-37
1			3				TOTAL SHEETS
2			4				59

DRAWN BY : WDC DATE : 7-2017
CHECKED BY : ACO DATE : 12-2017
DESIGN ENGINEER OF RECORD: ACO DATE : 12-2017

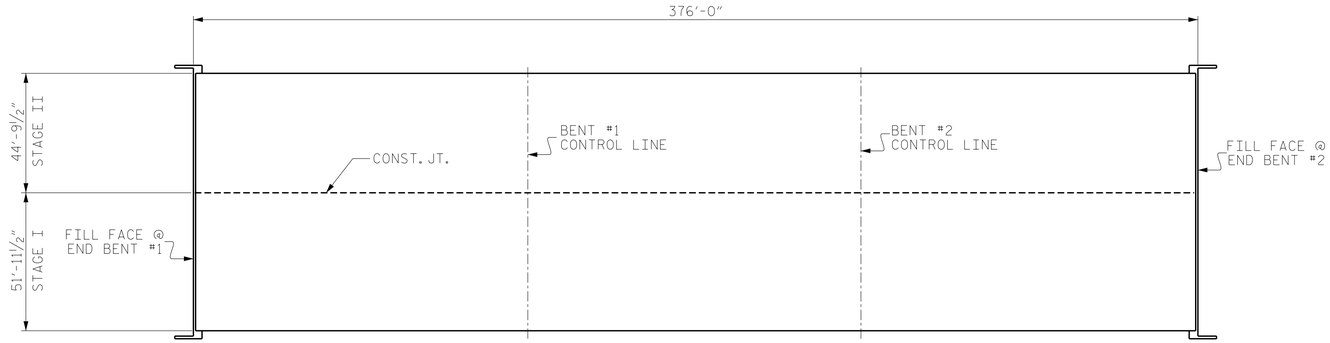

LAYOUT FOR COMPUTING AREA
REINFORCED CONCRETE DECK SLAB

(STAGE I = 19,536 SQ. FT.)
(STAGE II = 16,842 SQ. FT.)
(TOTAL = 36,378 SQ. FT.)

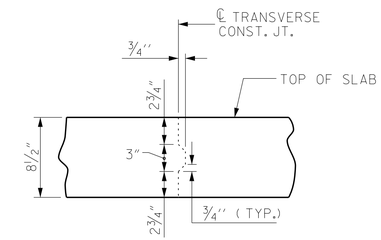

TRANSVERSE CONSTRUCTION JOINT DETAIL

NOTE: REINFORCING STEEL IN SLAB NOT SHOWN.
LONGITUDINAL REINFORCING STEEL SHALL BE
CONTINUOUS THRU JOINT

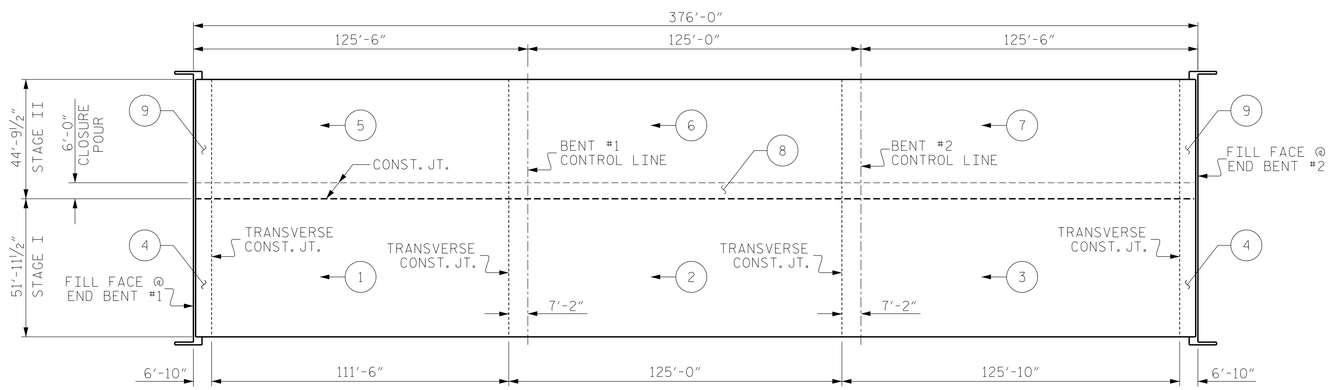

POURING SEQUENCE

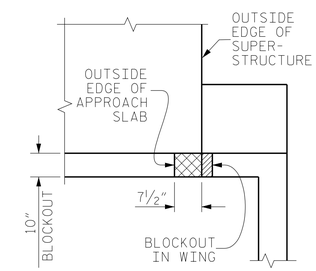

CORNER DETAIL

CONCRETE SHALL BE POURED IN THE CROSSHATCHED AREA TO MATCH THE TOP OF END BENT WING ELEVATIONS. UNLESS OTHERWISE DIRECTED BY THE ENGINEER, THE CONCRETE IN THESE AREAS SHALL BE PLACED AT THE SAME TIME THE BLOCKOUTS IN THE END BENT WINGS ARE POURED AS NOTED ON SHEET 1 OF "INTEGRAL END BENT 1" AND SHEET 1 OF "INTEGRAL END BENT 2" SHEETS.

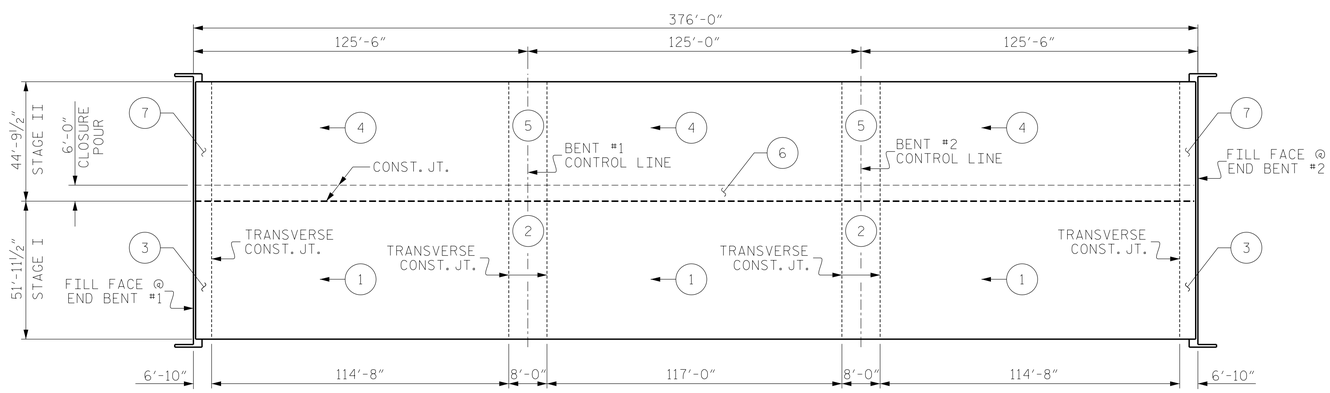

OPTIONAL
POURING SEQUENCE

IN EACH STAGE, POUR 2 OR 5 SHALL NOT BE STARTED UNTIL BOTH ADJACENT 1 OR 4 POURS REACH A MINIMUM STRENGTH OF 3000 PSI.

NORTH CAROLINA PROFESSIONAL ENGINEER SEAL 024414 HARDY L. WILLIS
Hardy L. Willis
CC287FC6B7A481...
7/17/2018 9:13:46 AM EDT

DOCUMENT NOT CONSIDERED FINAL UNLESS ALL SIGNATURES COMPLETED

V&M
Vaughn & Melton
Consulting Engineers
Asheville, North Carolina
828-253-2796
Boone, NC 828-355-9933
Tri-Cities, TN 423-467-8401
Knoxville, TN 865-546-5800
Spartanburg, SC 864-574-4775
Charleston, SC 843-974-5650
Middlesboro, KY 606-248-6600
Atlanta, GA 770-627-3590
Raleigh, NC 919-977-9455
Charlotte, NC 704-357-0488

Copyright © 2006 Vaughn & Melton, Inc. All Rights Reserved

PROJECT NO. R-3825B
JOHNSTON COUNTY
STATION: 64+20.00 -L-

STATE OF NORTH CAROLINA
DEPARTMENT OF TRANSPORTATION
RALEIGH

SUPERSTRUCTURE

POURING SEQUENCE AND DECK SLAB AREA

REVISIONS						SHEET NO.
NO.	BY:	DATE:	NO.	BY:	DATE:	S-38
1			3			TOTAL SHEETS
2			4			59

DRAWN BY : WDC DATE : 7-2017
CHECKED BY : ACO DATE : 12-2017
DESIGN ENGINEER OF RECORD: ACO DATE : 12-2017

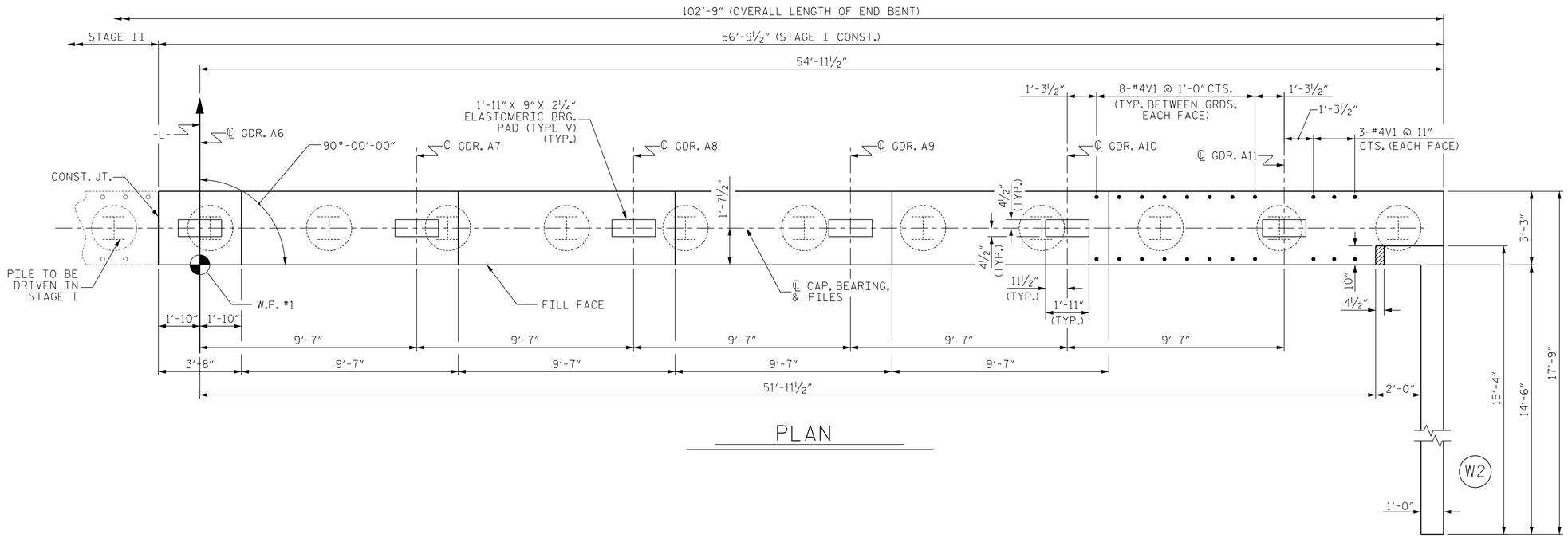

PLAN

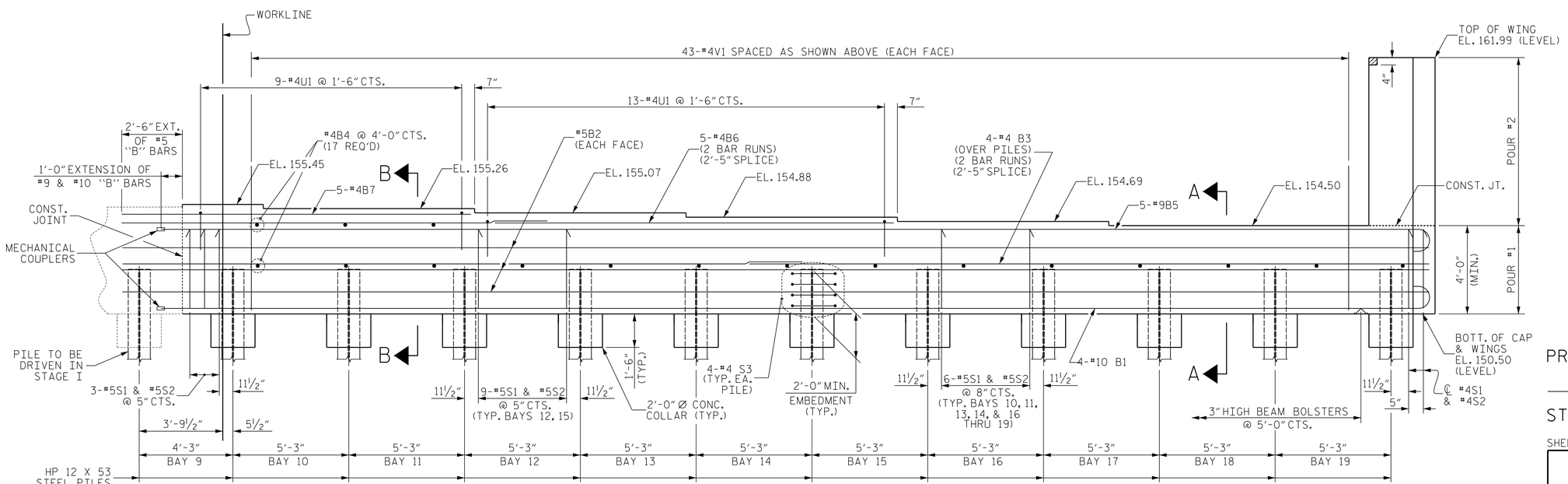

ELEVATION

NOTES

THE TOP SURFACE OF THE END BENT CAP, EXCEPT THE BEARING AREA, SHALL BE RAKED TO A DEPTH OF ¼".

THE CONCRETE IN THE SHADED AREA OF THE WING SHALL BE POURED AFTER THE PARAPET IS CAST IF SLIP FORMING IS USED.

FOR SECTION A-A AND B-B, SEE SHEET 4 OF 4.

FOR PILE SPLICE DETAILS, SEE SHEET 4 OF 4.

FOR WING DETAILS, SEE SHEET 3 OF 4.

NORTH CAROLINA PROFESSIONAL SEAL ENGINEER HARRY L. WILLIS 20777 Registration for Engineering Firm C-0287 CC287FC0-B5B9

7/17/2018 9:13:46 AM EDT

DOCUMENT NOT CONSIDERED FINAL UNLESS ALL SIGNATURES COMPLETED

PROJECT NO. R-3825B

JOHNSTON COUNTY

STATION: 64+20.00 -L-

SHEET 1 OF 4

STATE OF NORTH CAROLINA
DEPARTMENT OF TRANSPORTATION
RALEIGH

SUBSTRUCTURE

END BENT 1
(STAGE I)

Vaughn & Melton
Consulting Engineers
Asheville, North Carolina
828-253-2796
Raleigh, NC 919-977-9455
Charlotte, NC 704-357-0488
Boone, NC 828-355-9933
Tri-Cities, TN 423-467-8401
Knoxville, TN 865-546-5800
Spartanburg, SC 864-574-4775
Charleston, SC 843-974-5650
Middlesboro, KY 606-248-6600
Atlanta, GA 770-627-3590

Copyright © 2006 Vaughn & Melton, Inc. All Rights Reserved

DWN. BY: WDC	DATE: 7/2017
CHKD. BY: ACO	DATE: 12/2017
DES. EGR. OF RECORD: ACO	DATE: 12/2017

REVISIONS								SHEET NO.
NO.	BY:	DATE:	NO.	BY:	DATE:			S-39
1			3					TOTAL SHEETS
2			4					59

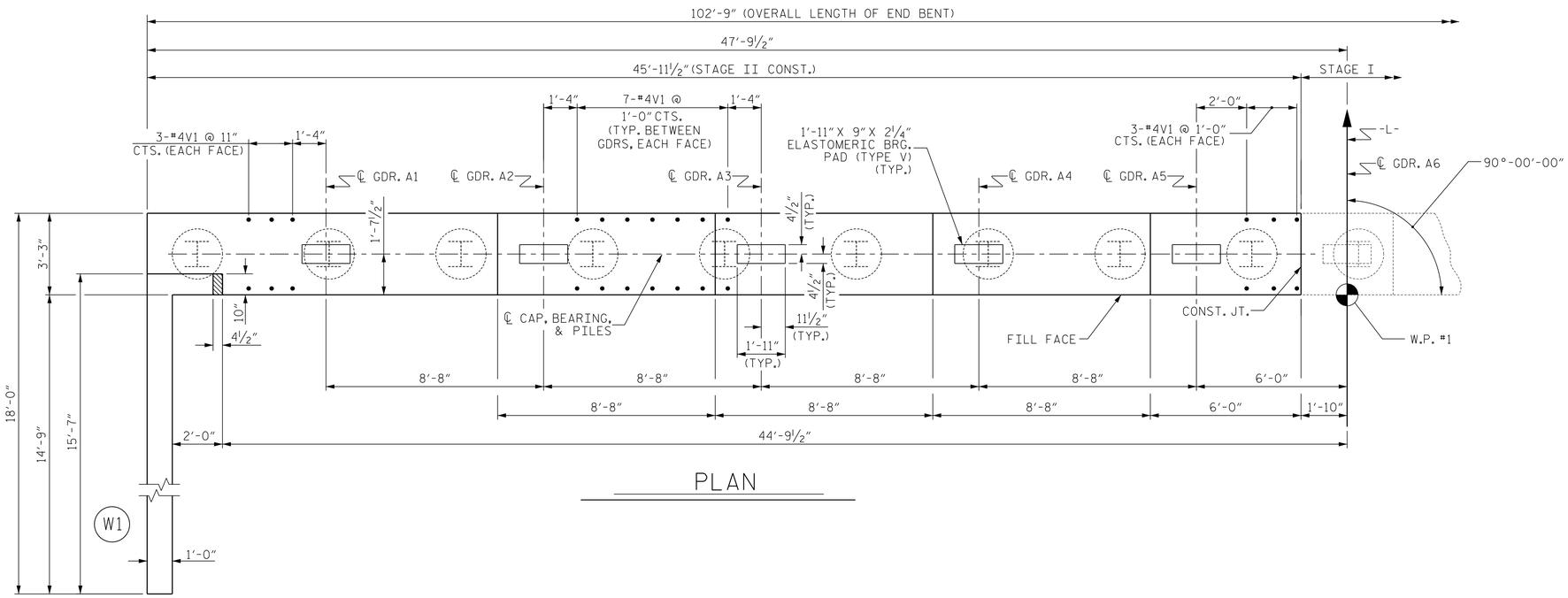

PLAN

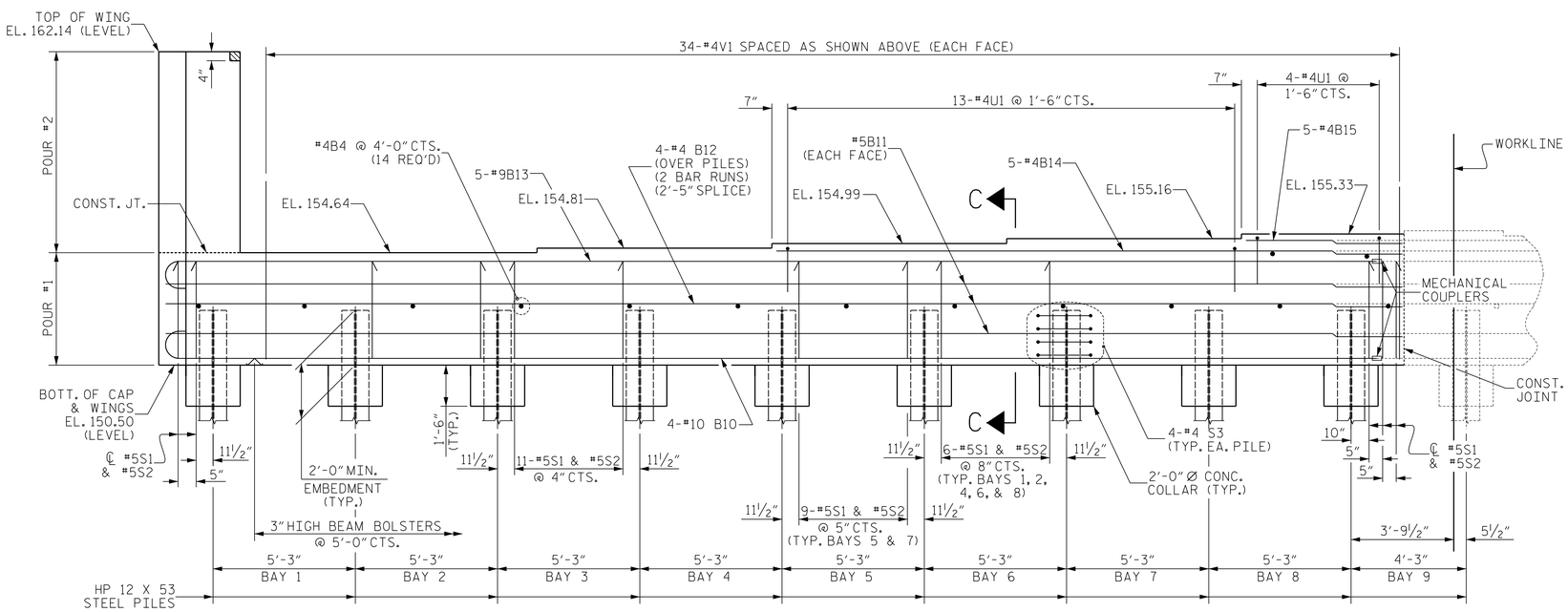

ELEVATION

NOTES

THE TOP SURFACE OF THE END BENT CAP, EXCEPT THE BEARING AREA, SHALL BE RAKED TO A DEPTH OF ¼".

THE CONCRETE IN THE SHADED AREA OF THE WING SHALL BE POURED AFTER THE PARAPET IS CAST IF SLIP FORMING IS USED.

FOR SECTION C-C, SEE SHEET 4 OF 4.

FOR PILE SPLICE DETAILS, SEE SHEET 4 OF 4.

FOR WING DETAILS, SEE SHEET 3 OF 4.

NORTH CAROLINA PROFESSIONAL SEAL ENGINEER HARDY L. WILLIS

7/17/2018 9:13:46 AM EDT

DOCUMENT NOT CONSIDERED FINAL UNLESS ALL SIGNATURES COMPLETED

PROJECT NO. R-3825B

JOHNSTON COUNTY

STATION: 64+20.00 -L-

SHEET 2 OF 4

STATE OF NORTH CAROLINA
DEPARTMENT OF TRANSPORTATION
RALEIGH

SUBSTRUCTURE

END BENT 1
(STAGE II)

REVISIONS						SHEET NO.
NO.	BY:	DATE:	NO.	BY:	DATE:	S-40
1			3			TOTAL SHEETS
2			4			59

Vaughn & Melton
Consulting Engineers
Asheville, North Carolina
828-253-2796
Raleigh, NC 919-977-9455
Charlotte, NC 704-357-0488
Boone, NC 828-355-9933
Tri-Cities, TN 423-467-8401
Knoxville, TN 865-546-5800
Spartanburg, SC 864-574-4775
Charleston, SC 843-974-5650
Middlesboro, KY 606-248-6600
Atlanta, GA 770-627-3590

Copyright © 2006 Vaughn & Melton, Inc. All Rights Reserved

DWN. BY: WDC	DATE: 7/2017
CHKD. BY: ACO	DATE: 12/2017
DES. EGR. OF RECORD: ACO	DATE: 12/2017

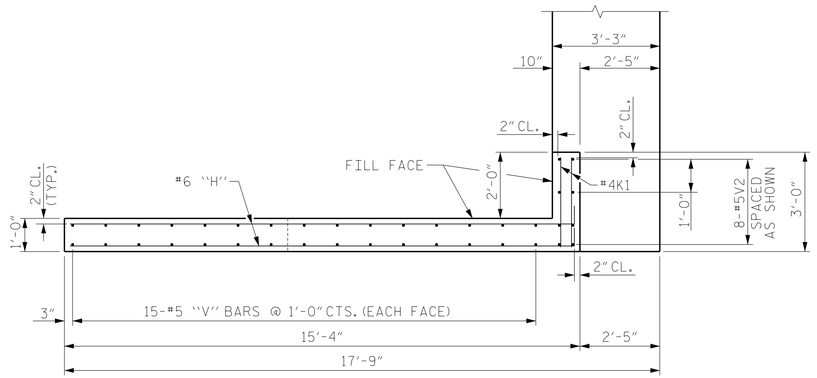

PLAN W2

(STAGE 1)

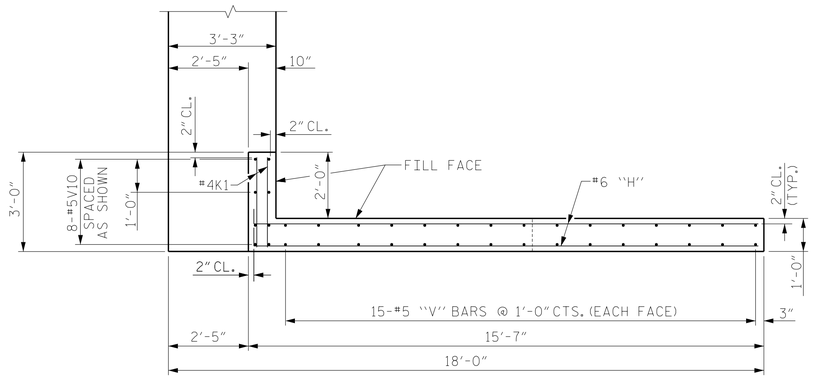

PLAN W1

(STAGE II)

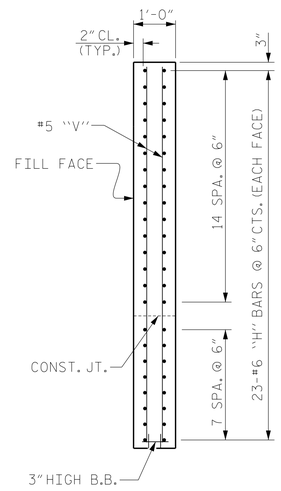

SECTION X-X

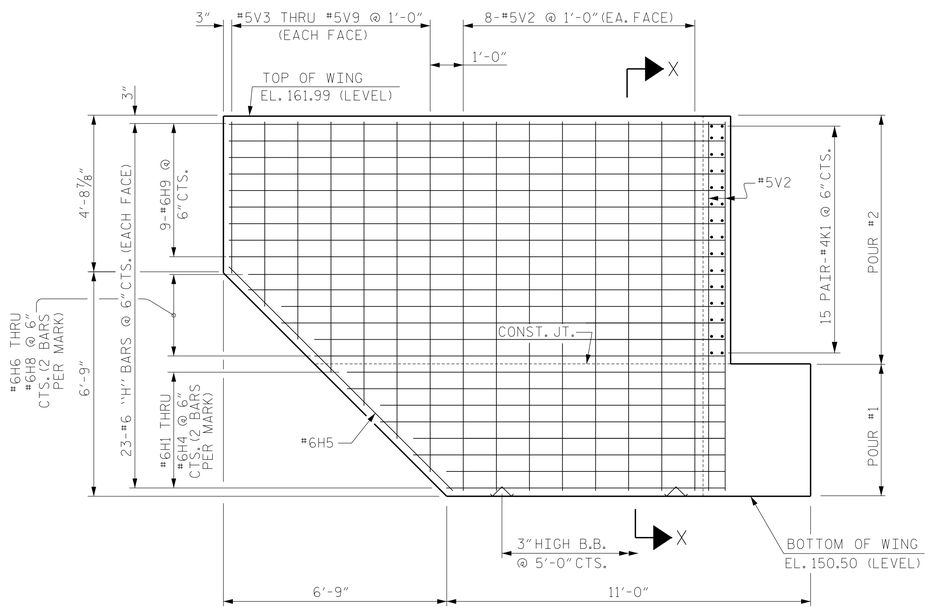

ELEVATION W2

(STAGE I)

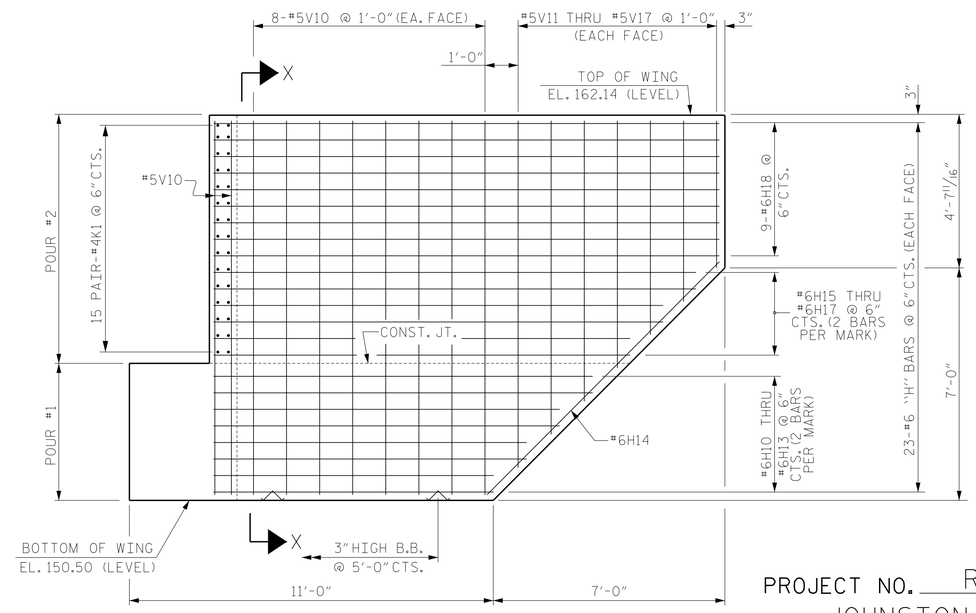

ELEVATION W1

(STAGE II)

PROJECT NO. R-3825B

JOHNSTON COUNTY

STATION: 64+20.00 -L-

SHEET 3 OF 4

STATE OF NORTH CAROLINA
DEPARTMENT OF TRANSPORTATION
RALEIGH

SUBSTRUCTURE

END BENT 1 WING DETAILS

NORTH CAROLINA PROFESSIONAL ENGINEER SEAL 23197 HARDY L. WILLIS

DocuSigned by: Hardy Willis
DC287FCF02C4E5...

7/17/2018 9:22:03 AM EDT

DOCUMENT NOT CONSIDERED FINAL UNLESS ALL SIGNATURES COMPLETED

V&M
Vaughn & Melton
Consulting Engineers
Asheville, North Carolina
828-253-2796
Raleigh, NC 919-977-9455
Charlotte, NC 704-357-0488
Boone, NC 828-355-9933
Tri-Cities, TN 423-467-8401
Knoxville, TN 865-546-5800
Spartanburg, SC 864-574-4775
Charleston, SC 843-974-5650
Middlesboro, KY 606-248-6600
Atlanta, GA 770-627-3590

Copyright © 2006 Vaughn & Melton, Inc. All Rights Reserved

DWN. BY: WDC	DATE: 7/2017	
CHKD. BY: ACO	DATE: 12/2017	
DES. EGR. OF RECORD: ACO	DATE: 12/2017	

REVISIONS						SHEET NO.
NO.	BY:	DATE:	NO.	BY:	DATE:	S-41
1			3			TOTAL SHEETS
2			4			59

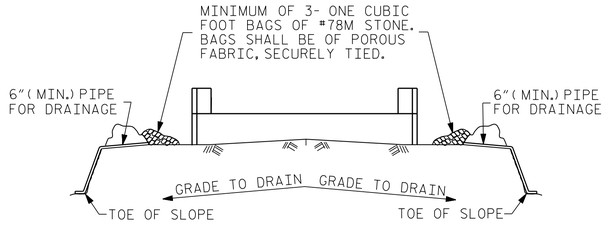

BAGGED STONE AND PIPE SHALL BE PLACED IMMEDIATELY AFTER COMPLETION OF END BENT EXCAVATION. PIPE MAY BE EITHER CONCRETE, CORRUGATED STEEL, CORRUGATED ALUMINUM ALLOY, OR CORRUGATED PLASTIC. PERFORATED PIPE WILL NOT BE ALLOWED.

BAGGED STONE SHALL REMAIN IN PLACE UNTIL THE ENGINEER DIRECTS THAT IT BE REMOVED. THE CONTRACTOR SHALL REMOVE AND DISPOSE OF SILT ACCUMULATIONS AT BAGGED STONE WHEN SO DIRECTED BY THE ENGINEER. BAGS SHALL BE REMOVED AND REPLACED WHENEVER THE ENGINEER DETERMINES THAT THEY HAVE DETERIORATED AND LOST THEIR EFFECTIVENESS.

NO SEPARATE PAYMENT WILL BE MADE FOR THIS WORK AND THE ENTIRE COST OF THIS WORK SHALL BE INCLUDED IN THE UNIT CONTRACT PRICE BID FOR THE SEVERAL PAY ITEMS.

TEMPORARY DRAINAGE AT END BENT

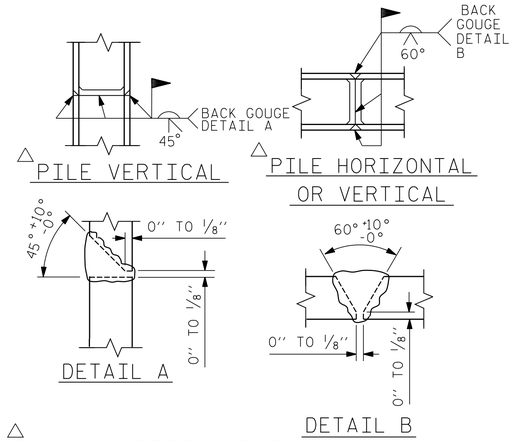

△ POSITION OF PILE DURING WELDING.

PILE SPLICE DETAILS

BAR TYPES

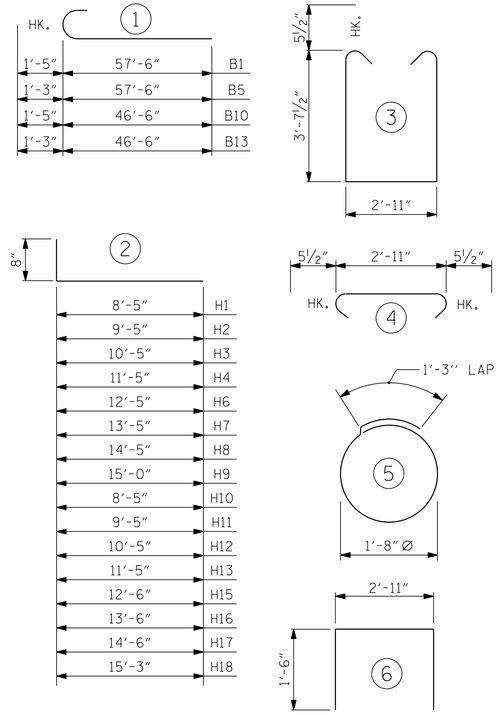

ALL BAR DIMENSIONS ARE OUT TO OUT.

STAGE I	STAGE II
HP 12 X 53 STEEL PILES NO: 12 LIN. FT.= 420	HP 12 X 53 STEEL PILES NO: 8 LIN. FT.= 280
PILE DRIVING EQUIPMENT SETUP FOR HP 12 X 53 STEEL PILES NO: 12	PILE DRIVING EQUIPMENT SETUP FOR HP 12 X 53 STEEL PILES NO: 8

BILL OF MATERIAL

STAGE I

BAR	NO.	SIZE	TYPE	LENGTH	WEIGHT
B1	4	#10	1	58'-11"	1014
B2	6	#5	STR	59'-2"	370
B3	8	#4	STR	30'-10"	165
B4	17	#4	STR	2'-11"	33
B5	5	#9	1	58'-9"	999
B6	10	#4	STR	18'-6"	124
B7	5	#4	STR	15'-7"	52
H1	4	#6	2	9'-1"	55
H2	4	#6	2	10'-1"	61
H3	4	#6	2	11'-1"	67
H4	4	#6	2	12'-1"	73
H5	2	#6	STR	9'-7"	29
H6	4	#6	2	13'-1"	79
H7	4	#6	2	14'-1"	85
H8	4	#6	2	15'-1"	91
H9	18	#6	2	15'-8"	424
K1	30	#4	STR	2'-8"	53
S1	71	#5	3	11'-1"	821
S2	71	#5	4	3'-10"	284
S3	44	#4	5	6'-6"	191
U1	22	#4	6	5'-11"	87
V1	86	#4	STR	6'-6"	373
V2	24	#5	STR	11'-2"	280
V3	2	#5	STR	10'-6"	22
V4	2	#5	STR	9'-4"	19
V5	2	#5	STR	8'-2"	17
V6	2	#5	STR	7'-0"	15
V7	2	#5	STR	5'-10"	12
V8	2	#5	STR	4'-8"	10
V9	2	#5	STR	3'-6"	7

REINFORCING STEEL 5912 LBS.

CLASS A CONCRETE BREAKDOWN

POUR #1	CAP, LOWER PART OF WING & COLLARS	33.3 C.Y.
POUR #2	UPPER PART OF WING	4.6 C.Y.
TOTAL CLASS A CONCRETE		37.9 C.Y.

STAGE II

BAR	NO.	SIZE	TYPE	LENGTH	WEIGHT
B10	4	#10	1	47'-11"	825
B11	6	#5	STR	45'-9"	286
B12	8	#4	STR	24'-0"	128
B4	14	#4	STR	2'-11"	27
B13	5	#9	1	47'-9"	812
B14	5	#4	STR	23'-2"	77
B15	5	#4	STR	5'-10"	19
H10	4	#6	2	9'-1"	55
H11	4	#6	2	10'-1"	61
H12	4	#6	2	11'-1"	67
H13	4	#6	2	12'-1"	73
H14	2	#6	STR	9'-11"	30
H15	4	#6	2	13'-2"	79
H16	4	#6	2	14'-2"	85
H17	4	#6	2	15'-2"	91
H18	18	#6	2	15'-11"	430
K1	30	#4	STR	2'-8"	53
S1	64	#5	3	11'-1"	740
S2	64	#5	4	3'-10"	256
S3	36	#4	5	6'-6"	156
U1	17	#4	6	5'-11"	67
V1	68	#4	STR	6'-6"	295
V10	24	#5	STR	11'-3"	282
V11	2	#5	STR	10'-5"	22
V12	2	#5	STR	9'-5"	20
V13	2	#5	STR	8'-5"	18
V14	2	#5	STR	7'-5"	15
V15	2	#5	STR	6'-5"	13
V16	2	#5	STR	5'-5"	11
V17	2	#5	STR	4'-5"	9

REINFORCING STEEL 5102 LBS.

CLASS A CONCRETE BREAKDOWN

POUR #1	CAP, LOWER PART OF WING & COLLARS	27.6 C.Y.
POUR #2	UPPER PART OF WING	4.7 C.Y.
TOTAL CLASS A CONCRETE		32.3 C.Y.

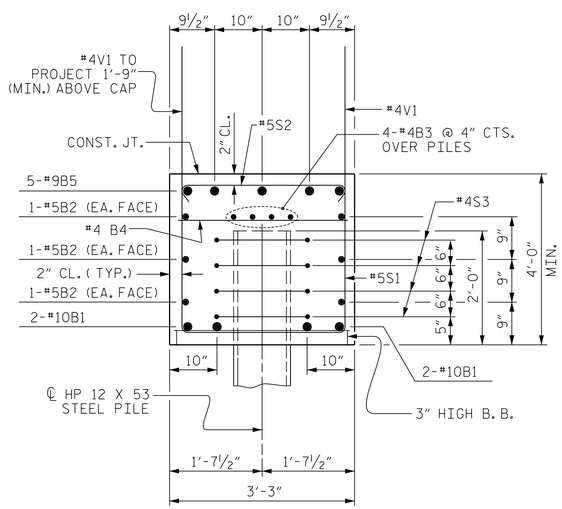

SECTION A-A

(STAGE I)
(CONCRETE COLLAR NOT SHOWN FOR CLARITY)

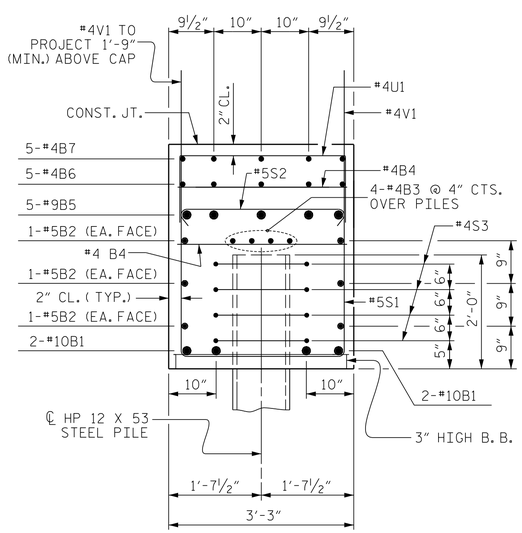

SECTION B-B

(STAGE I)
(CONCRETE COLLAR NOT SHOWN FOR CLARITY)

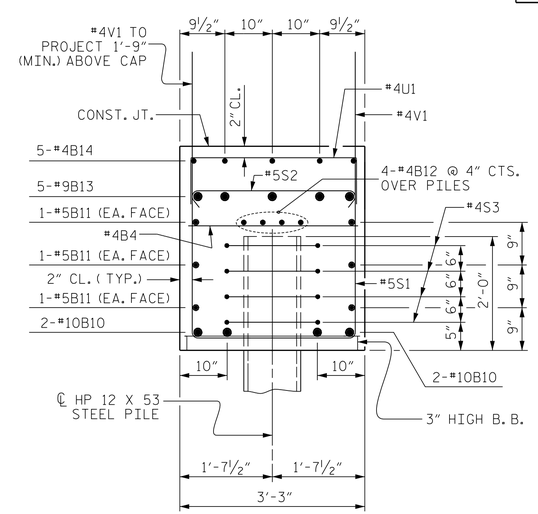

SECTION C-C

(STAGE II)
(CONCRETE COLLAR NOT SHOWN FOR CLARITY)

NORTH CAROLINA PROFESSIONAL ENGINEER SEAL HARDY L. WILLIS CC2018-0025461 DocuSigned by: 7/17/2018

7/17/2018 9:22:03 AM EDT

DOCUMENT NOT CONSIDERED FINAL UNLESS ALL SIGNATURES COMPLETED

Vaughn & Melton
Consulting Engineers
Asheville, North Carolina
828-253-2796
Raleigh, NC 919-977-9455
Charlotte, NC 704-357-0488
Boone, NC 828-355-9933
Tri-Cities, TN 423-467-8401
Knoxville, TN 865-546-5800
Spartanburg, SC 864-574-4775
Charleston, SC 843-974-5650
Middlesboro, KY 606-248-6600
Atlanta, GA 770-627-3590

Copyright © 2006 Vaughn & Melton, Inc. All Rights Reserved

PROJECT NO. R-3825B
JOHNSTON COUNTY
STATION: 64+20.00 -L-

SHEET 4 OF 4

STATE OF NORTH CAROLINA
DEPARTMENT OF TRANSPORTATION
RALEIGH

SUBSTRUCTURE

END BENT 1 DETAILS

REVISIONS						SHEET NO.
NO.	BY:	DATE:	NO.	BY:	DATE:	S-42
1			3			TOTAL SHEETS
2			4			59

DWN. BY: WDC	DATE: 7/2017
CHKD. BY: ACO	DATE: 12/2017
DES. EGR. OF RECORD: ACO	DATE: 12/2017

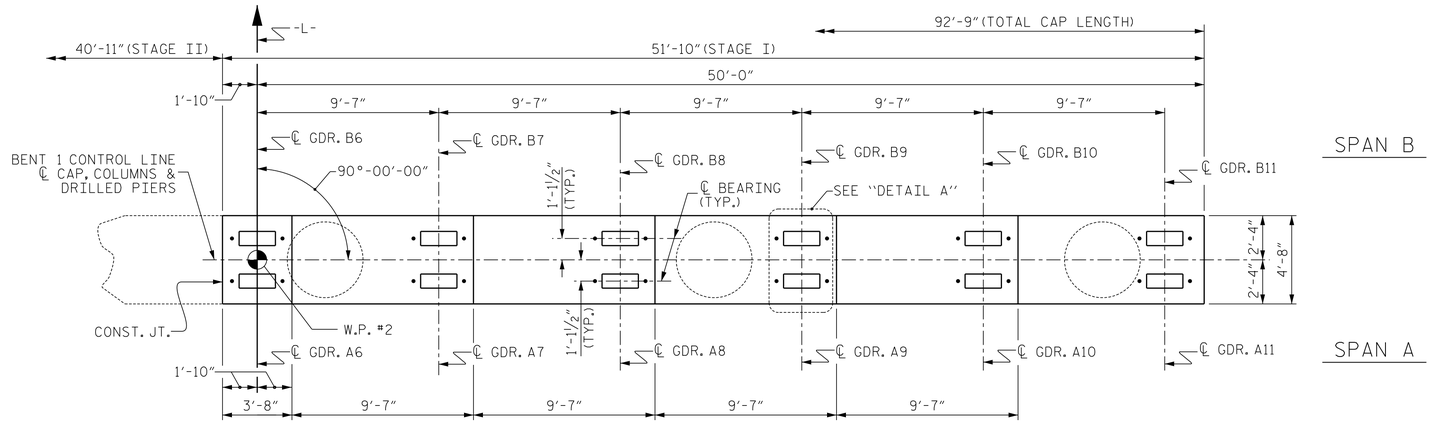

PLAN

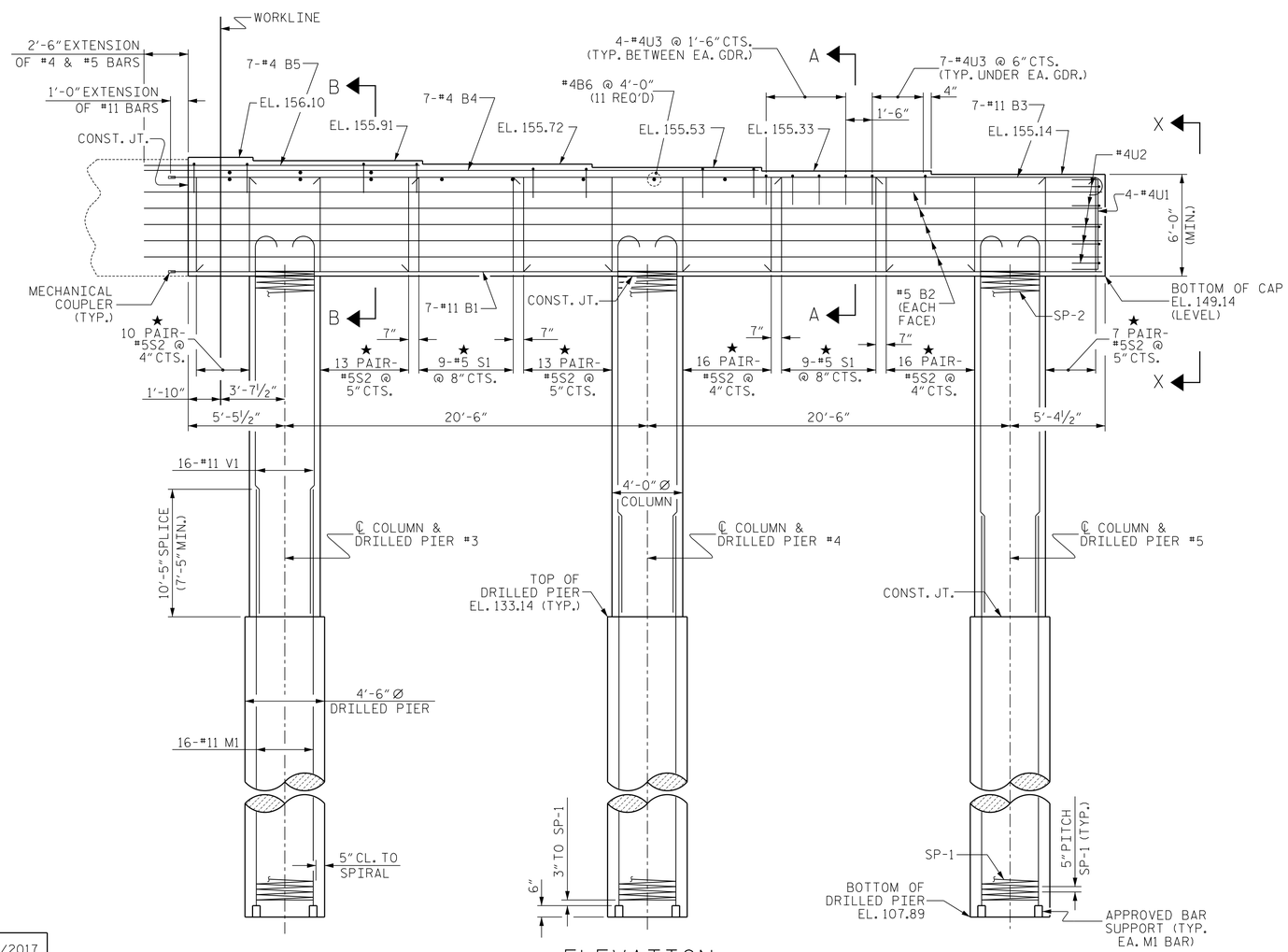

ELEVATION

(INFORMATION SHOWN IS TYPICAL FOR EACH COLUMN AND DRILLED PIER)

NOTES

STIRRUPS IN CAP MAY BE SHIFTED AS NECESSARY TO CLEAR DOWELS.

HOOKS ON "V" BARS MAY BE TURNED AS NECESSARY FOR PLACING REINFORCING STEEL.

FOR DRILLED PIERS, SEE SECTION 411 OF THE STANDARD SPECIFICATIONS.

ALL STEEL IN THE DRILLED PIERS IS INCLUDED IN THE PAY ITEMS FOR "REINFORCING STEEL" AND "SPIRAL COLUMN REINFORCING STEEL."

★ INVERT ALTERNATE STIRRUPS.

DRILLED PIERS SHALL BE TERMINATED ONE FOOT ± ABOVE NORMAL WATER SURFACE ELEVATION FOR SHAFTS LOCATED IN WATER.

THE CONTRACTOR'S ATTENTION IS CALLED TO THE FACT THAT THE LONGITUDINAL REINFORCEMENT FOR DRILLED PIERS IS DETAILED WITH 3 FEET OF EXTRA LENGTH.

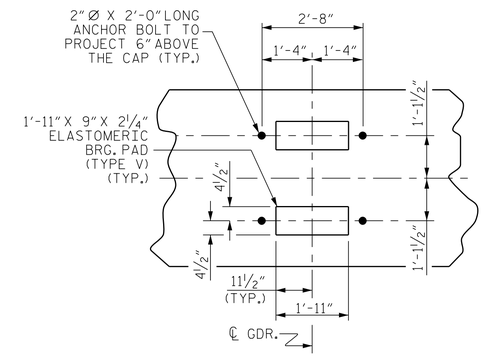

DETAIL A

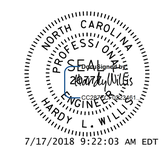

DOCUMENT NOT CONSIDERED FINAL UNLESS ALL SIGNATURES COMPLETED

PROJECT NO. R-3825B

JOHNSTON COUNTY

STATION: 64+20.00 -L-

SHEET 1 OF 4

STATE OF NORTH CAROLINA
DEPARTMENT OF TRANSPORTATION
RALEIGH

SUBSTRUCTURE

BENT 1
(STAGE I)

REVISIONS						SHEET NO.
NO.	BY:	DATE:	NO.	BY:	DATE:	S-43
1			3			TOTAL SHEETS
2			4			59

V&M
Vaughn & Melton
Consulting Engineers
Asheville, North Carolina
828-253-2796
Boone, NC 828-355-9933
Tri-Cities, TN 423-467-8401
Knoxville, TN 865-546-5800
Spartanburg, SC 864-574-4775
Charleston, SC 843-974-5650
Middlesboro, KY 606-248-6600
Atlanta, GA 770-627-3590
Raleigh, NC 919-977-9455
Charlotte, NC 704-357-0488

Copyright © 2006 Vaughn & Melton, Inc. All Rights Reserved

DWN. BY: WDC	DATE: 7/2017
CHKD. BY: ACO	DATE: 12/2017
DES. EGR. OF RECORD: ACO	DATE: 12/2017

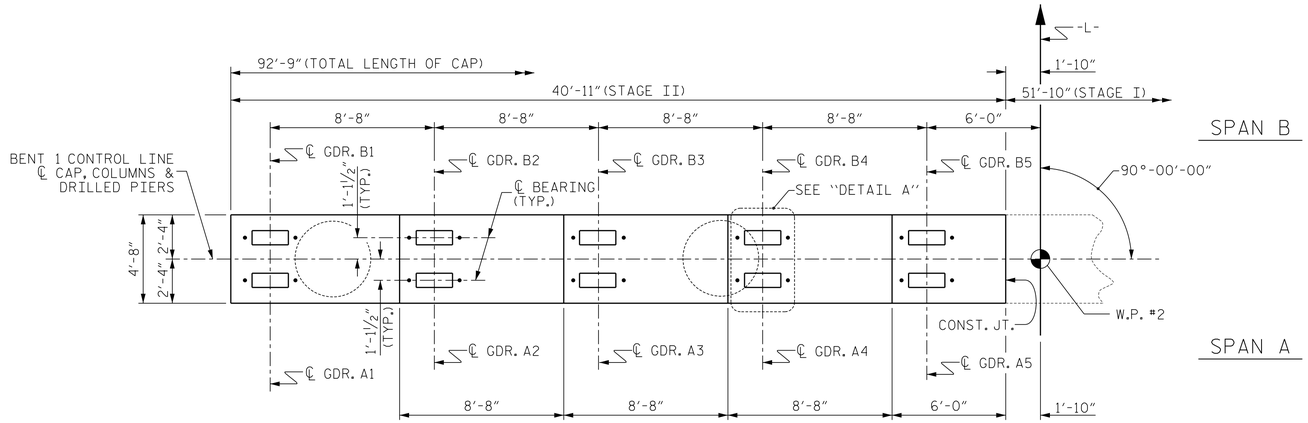

PLAN

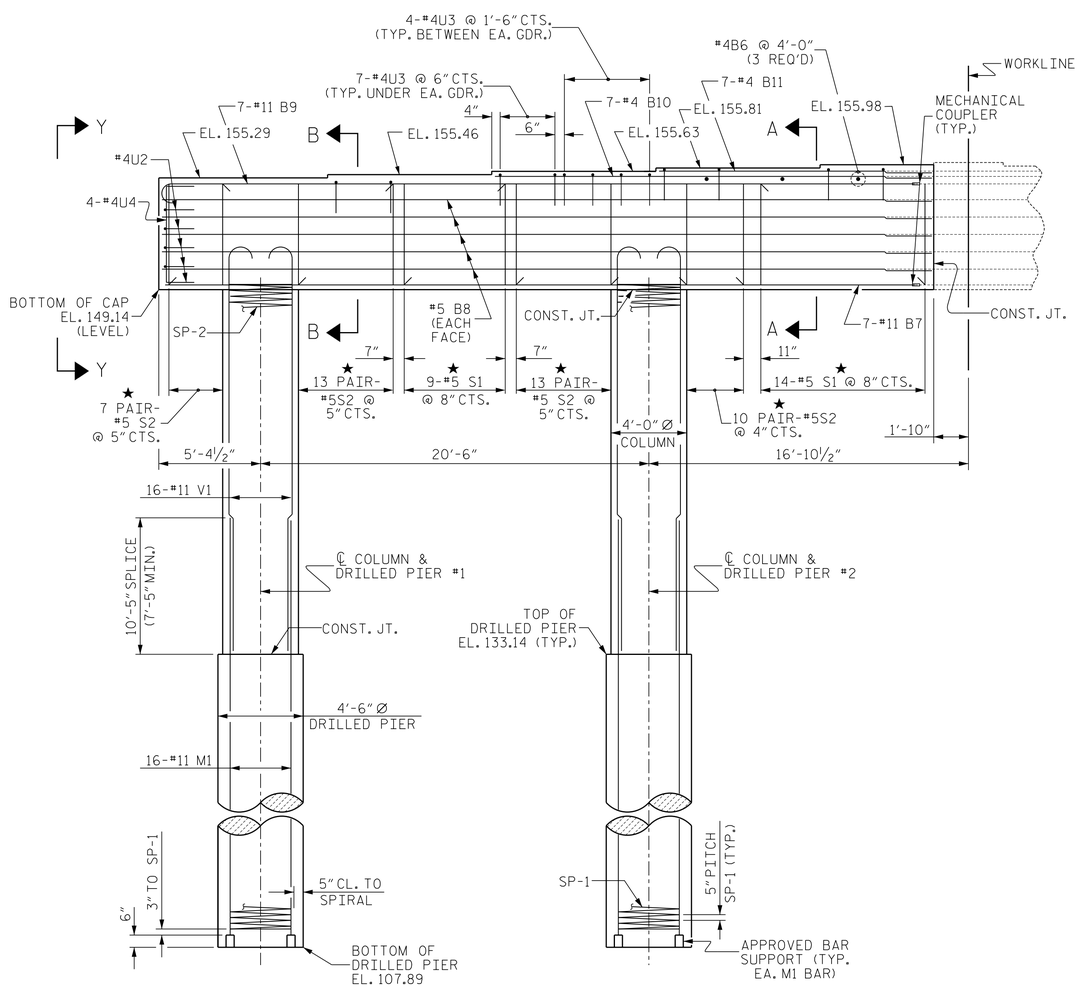

ELEVATION

(INFORMATION SHOWN IS TYPICAL FOR EACH COLUMN AND DRILLED PIER)

NOTES

STIRRUPS IN CAP MAY BE SHIFTED AS NECESSARY TO CLEAR DOWELS.

HOOKS ON "V" BARS MAY BE TURNED AS NECESSARY FOR PLACING REINFORCING STEEL.

FOR DRILLED PIERS, SEE SECTION 411 OF THE STANDARD SPECIFICATIONS.

ALL STEEL IN THE DRILLED PIERS IS INCLUDED IN THE PAY ITEMS FOR "REINFORCING STEEL" AND "SPIRAL COLUMN REINFORCING STEEL."

★ INVERT ALTERNATE STIRRUPS.

DRILLED PIERS SHALL BE TERMINATED ONE FOOT ± ABOVE NORMAL WATER SURFACE ELEVATION FOR SHAFTS LOCATED IN WATER.

THE CONTRACTOR'S ATTENTION IS CALLED TO THE FACT THAT THE LONGITUDINAL REINFORCEMENT FOR DRILLED PIERS IS DETAILED WITH 3 FEET OF EXTRA LENGTH.

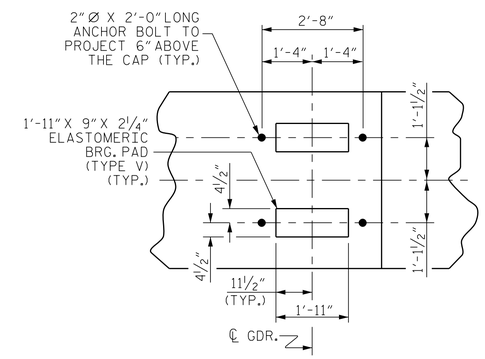

DETAIL A

NORTH CAROLINA PROFESSIONAL SEAL ENGINEER HARDY L. WILLIS

7/17/2018 9:22:03 AM EDT

DOCUMENT NOT CONSIDERED FINAL UNLESS ALL SIGNATURES COMPLETED

PROJECT NO. R-3825B

JOHNSTON COUNTY

STATION: 64+20.00 -L-

SHEET 2 OF 4

STATE OF NORTH CAROLINA
DEPARTMENT OF TRANSPORTATION
RALEIGH

SUBSTRUCTURE

BENT 1
(STAGE II)

DWN. BY: WDC	DATE: 7/2017
CHKD. BY: ACO	DATE: 12/2017
DES. EGR. OF RECORD: ACO	DATE: 12/2017

V&M Vaughn & Melton Consulting Engineers
Asheville, North Carolina 828-253-2796
Raleigh, NC 919-977-9455
Charlotte, NC 704-357-0488
Boone, NC 828-355-9933
Tri-Cities, TN 423-467-8401
Knoxville, TN 865-546-5800
Spartanburg, SC 864-574-4775
Charleston, SC 843-974-5650
Middlesboro, KY 606-248-6600
Atlanta, GA 770-627-3590

Copyright © 2006 Vaughn & Melton, Inc. All Rights Reserved

REVISIONS						SHEET NO.
NO.	BY:	DATE:	NO.	BY:	DATE:	S-44
1			3			TOTAL SHEETS
2			4			59

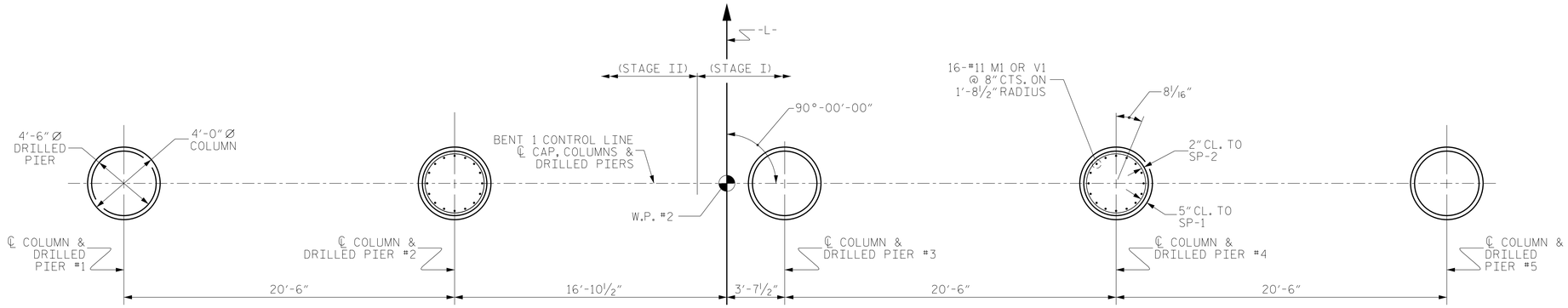

PLAN OF DRILLED PIERS AND COLUMNS

(INFORMATION SHOWN IS TYPICAL FOR EACH COLUMN AND DRILLED PIER)

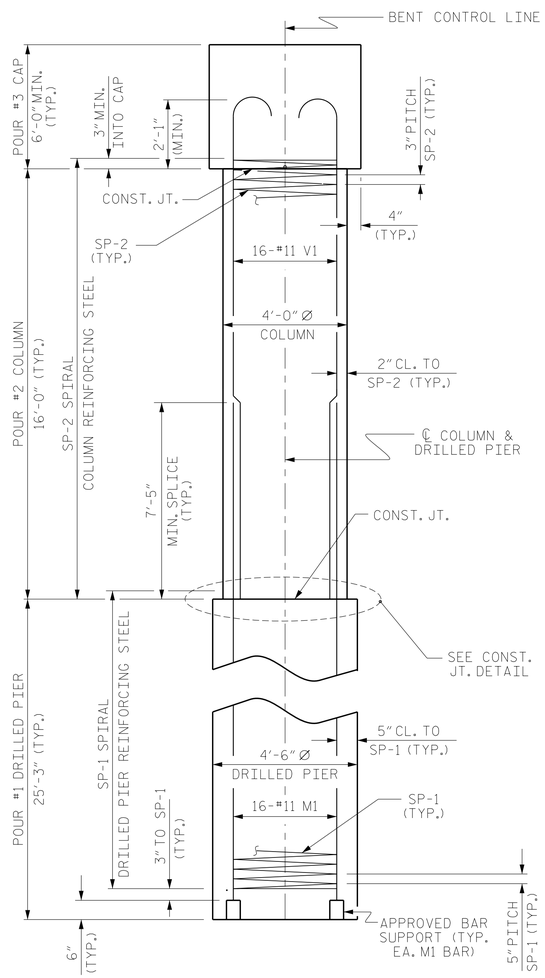

END ELEVATION

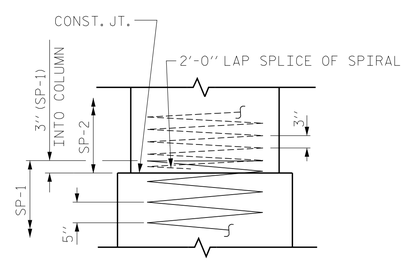

CONSTRUCTION JOINT DETAIL

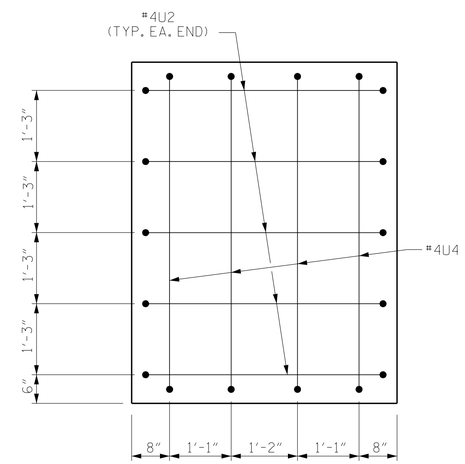

VIEW Y-Y

(LEFT END - STAGE II)

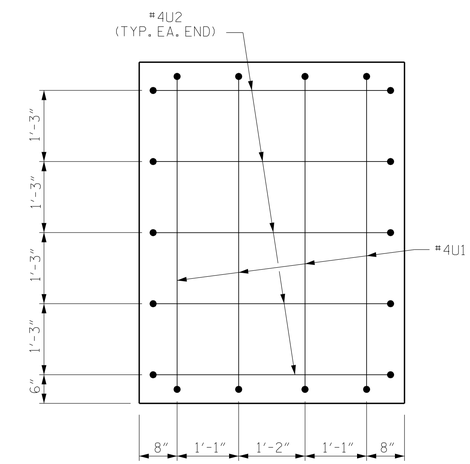

VIEW X-X

(RIGHT END - STAGE I)

NORTH CAROLINA PROFESSIONAL ENGINEER SEAL 20777 HARDY L. WILLIS
Electronically signed by Hardy L. Willis
CC287FCF0C3C3B1...
7/17/2018 9:22:03 AM EDT

DOCUMENT NOT CONSIDERED FINAL UNLESS ALL SIGNATURES COMPLETED

PROJECT NO. R-3825B
JOHNSTON COUNTY
STATION: 64+20.00 -L-

SHEET 3 OF 4

STATE OF NORTH CAROLINA
DEPARTMENT OF TRANSPORTATION
RALEIGH

SUBSTRUCTURE

BENT 1 DETAILS

V&M
Vaughn & Melton
Consulting Engineers
Asheville, North Carolina
828-253-2796
Raleigh, NC 919-977-9455
Charlotte, NC 704-357-0488
Boone, NC 828-355-9933
Tri-Cities, TN 423-467-8401
Knoxville, TN 865-546-5800
Spartanburg, SC 864-574-4775
Charleston, SC 843-974-5650
Middlesboro, KY 606-248-6600
Atlanta, GA 770-627-3590

Copyright © 2006 Vaughn & Melton, Inc. All Rights Reserved

DWN. BY: WDC	DATE: 7/2017
CHKD. BY: ACO	DATE: 12/2017
DES. EGR. OF RECORD: ACO	DATE: 12/2017

REVISIONS						SHEET NO.
NO.	BY:	DATE:	NO.	BY:	DATE:	S-45
1			3			TOTAL SHEETS
2			4			59

BAR TYPES

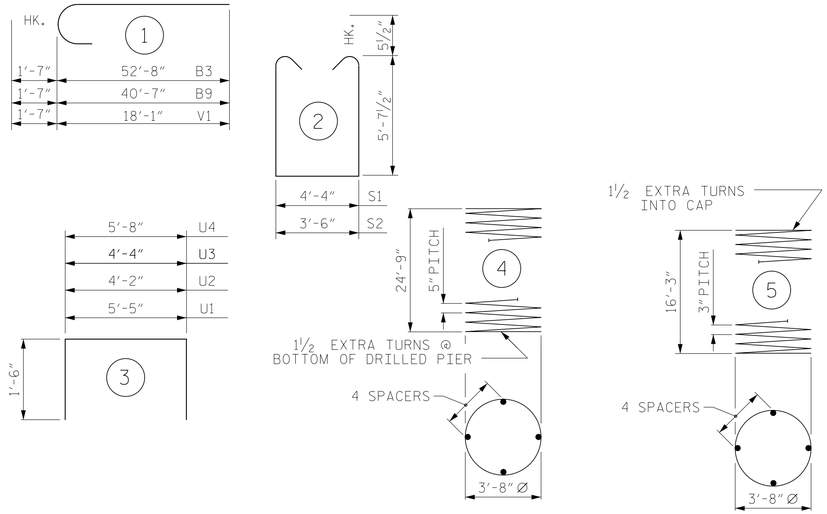

ALL BAR DIMENSIONS ARE OUT TO OUT

BILL OF MATERIAL

BENT 1 - STAGE I

BAR	NO.	SIZE	TYPE	LENGTH	WEIGHT
B1	7	#11	STR	52'-8"	1959
B2	10	#5	STR	54'-2"	565
B3	7	#11	1	54'-3"	2018
B4	7	#4	STR	34'-9"	162
B5	7	#4	STR	15'-7"	73
B6	11	#4	STR	4'-4"	32
M1	48	#11	STR	35'-2"	8968
S1	18	#5	2	16'-6"	310
S2	150	#5	2	15'-8"	2451
U1	4	#4	3	8'-5"	22
U2	5	#4	3	7'-2"	24
U3	62	#4	3	7'-4"	304
V1	48	#11	1	19'-8"	5015
REINFORCING STEEL					21,903 LBS.
SP-1	3	*	4	693'-2"	2169
SP-2	3	**	5	757'-7"	1518
SPIRAL COLUMN REINFORCING STEEL					3687 LBS.

* THE SP-1 SPIRAL REINFORCING STEEL SHALL BE W31 OR D-31 COLD DRAWN WIRE OR #5 PLAIN OR DEFORMED BAR

** THE SP-2 SPIRAL REINFORCING STEEL SHALL BE W20 OR D-20 COLD DRAWN WIRE OR #4 PLAIN OR DEFORMED BAR

CLASS A CONCRETE BREAKDOWN

POUR #2 (COLUMNS)	22.3 C.Y.
POUR #3 (CAP)	57.6 C.Y.
TOTAL CLASS A CONCRETE	79.9 C.Y.

DRILLED PIERS:

DRILLED PIER CONCRETE POUR #1 (DRILLED PIERS)	44.6 C.Y.
4'-6" Ø DRILLED PIERS NOT IN SOIL	43.20 LIN. FT.
4'-6" Ø DRILLED PIERS IN SOIL	32.55 LIN. FT.
PERMANENT STEEL CASING FOR 4'-6" Ø DRILLED PIER	42.42 LIN. FT.
CSL TUBES	321 LIN. FT.

BENT 1 - STAGE II

BAR	NO.	SIZE	TYPE	LENGTH	WEIGHT
B6	3	#4	STR	4'-4"	9
B7	7	#11	STR	40'-7"	1509
B8	10	#5	STR	40'-7"	423
B9	7	#11	1	42'-2"	1568
B10	7	#4	STR	23'-0"	108
B11	7	#4	STR	14'-4"	67
M1	32	#11	STR	35'-2"	5979
S1	23	#5	2	16'-6"	396
S2	86	#5	2	15'-8"	1405
U2	5	#4	3	7'-2"	24
U3	51	#4	3	7'-4"	250
U4	4	#4	3	8'-8"	23
V1	32	#11	1	19'-8"	3344
REINFORCING STEEL					15,105 LBS.
SP-1	2	*	4	693'-2"	1446
SP-2	2	**	5	757'-7"	1012
SPIRAL COLUMN REINFORCING STEEL					2458 LBS.

* THE SP-1 SPIRAL REINFORCING STEEL SHALL BE W31 OR D-31 COLD DRAWN WIRE OR #5 PLAIN OR DEFORMED BAR

** THE SP-2 SPIRAL REINFORCING STEEL SHALL BE W20 OR D-20 COLD DRAWN WIRE OR #4 PLAIN OR DEFORMED BAR

CLASS A CONCRETE BREAKDOWN

POUR #2 (COLUMNS)	14.9 C.Y.
POUR #3 (CAP)	45.8 C.Y.
TOTAL CLASS A CONCRETE	60.7 C.Y.

DRILLED PIERS:

DRILLED PIER CONCRETE POUR #1 (DRILLED PIERS)	29.7 C.Y.
4'-6" Ø DRILLED PIERS NOT IN SOIL	28.80 LIN. FT.
4'-6" Ø DRILLED PIERS IN SOIL	21.70 LIN. FT.
PERMANENT STEEL CASING FOR 4'-6" Ø DRILLED PIER	22.18 LIN. FT.
CSL TUBES	214 LIN. FT.

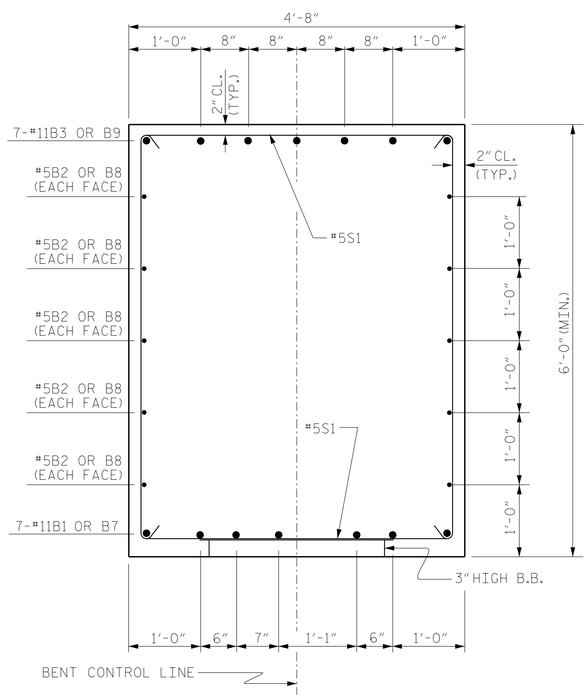

SECTION A-A

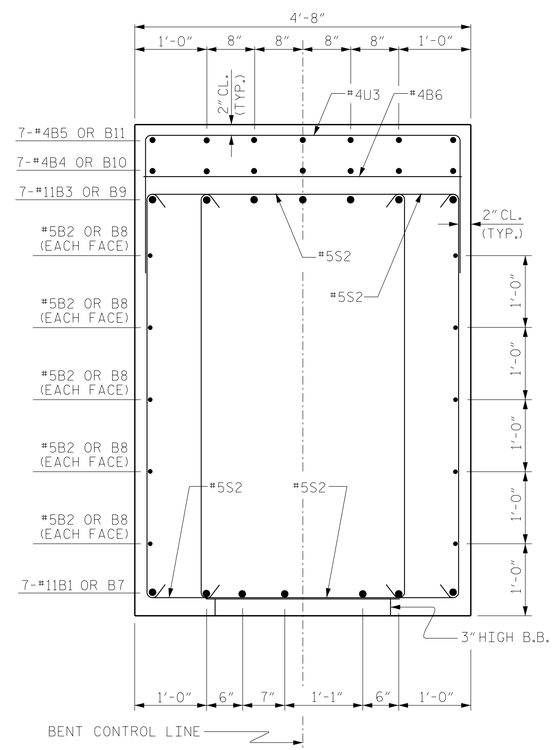

SECTION B-B

(SHOWING STIRRUP PAIRS)

NORTH CAROLINA PROFESSIONAL ENGINEER SEAL HARDY L. WILLIS 024287 PE

7/17/2018 9:22:03 AM EDT

DOCUMENT NOT CONSIDERED FINAL UNLESS ALL SIGNATURES COMPLETED

PROJECT NO. R-3825B
JOHNSTON COUNTY
STATION: 64+20.00 -L-

SHEET 4 OF 4

STATE OF NORTH CAROLINA
DEPARTMENT OF TRANSPORTATION
RALEIGH

SUBSTRUCTURE

BENT 1 DETAILS

V&M
Vaughn & Melton
Consulting Engineers
Asheville, North Carolina
828-253-2796
Raleigh, NC 919-977-9455
Charlotte, NC 704-357-0488
Boone, NC 828-355-9933
Tri-Cities, TN 423-467-8401
Knoxville, TN 865-546-5800
Spartanburg, SC 864-574-4775
Charleston, SC 843-974-5650
Middlesboro, KY 606-248-6600
Atlanta, GA 770-627-3590

Copyright © 2006 Vaughn & Melton, Inc. All Rights Reserved

DWN. BY: WDC	DATE: 7/2017
CHKD. BY: ACO	DATE: 12/2017
DES. EGR. OF RECORD: ACO	DATE: 12/2017

REVISIONS

NO.	BY:	DATE:	NO.	BY:	DATE:
1			3		
2			4		

SHEET NO. S-46

TOTAL SHEETS 59

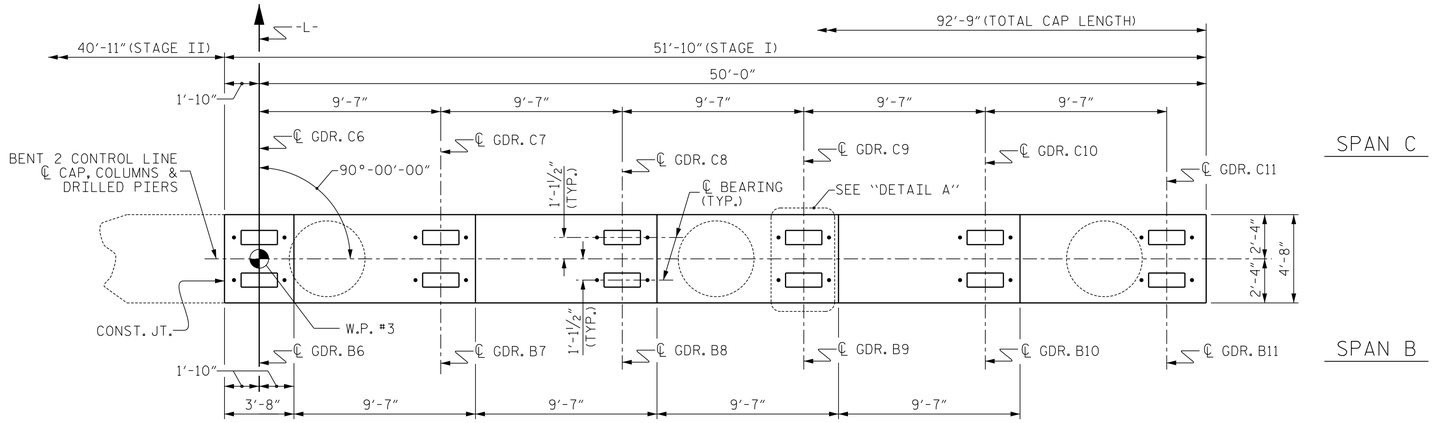

PLAN

NOTES

STIRRUPS IN CAP MAY BE SHIFTED AS NECESSARY TO CLEAR DOWELS.

HOOKS ON "V" BARS MAY BE TURNED AS NECESSARY FOR PLACING REINFORCING STEEL.

FOR DRILLED PIERS, SEE SECTION 411 OF THE STANDARD SPECIFICATIONS.

ALL STEEL IN THE DRILLED PIERS IS INCLUDED IN THE PAY ITEMS FOR "REINFORCING STEEL" AND "SPIRAL COLUMN REINFORCING STEEL."

★ INVERT ALTERNATE STIRRUPS.

DRILLED PIERS SHALL BE TERMINATED ONE FOOT ± ABOVE NORMAL WATER SURFACE ELEVATION FOR SHAFTS LOCATED IN WATER.

THE CONTRACTOR'S ATTENTION IS CALLED TO THE FACT THAT THE LONGITUDINAL REINFORCEMENT FOR DRILLED PIERS IS DETAILED WITH 3 FEET OF EXTRA LENGTH.

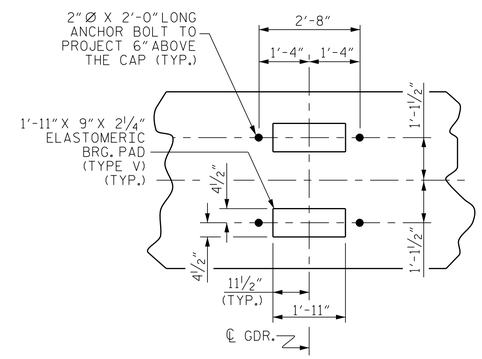

DETAIL A

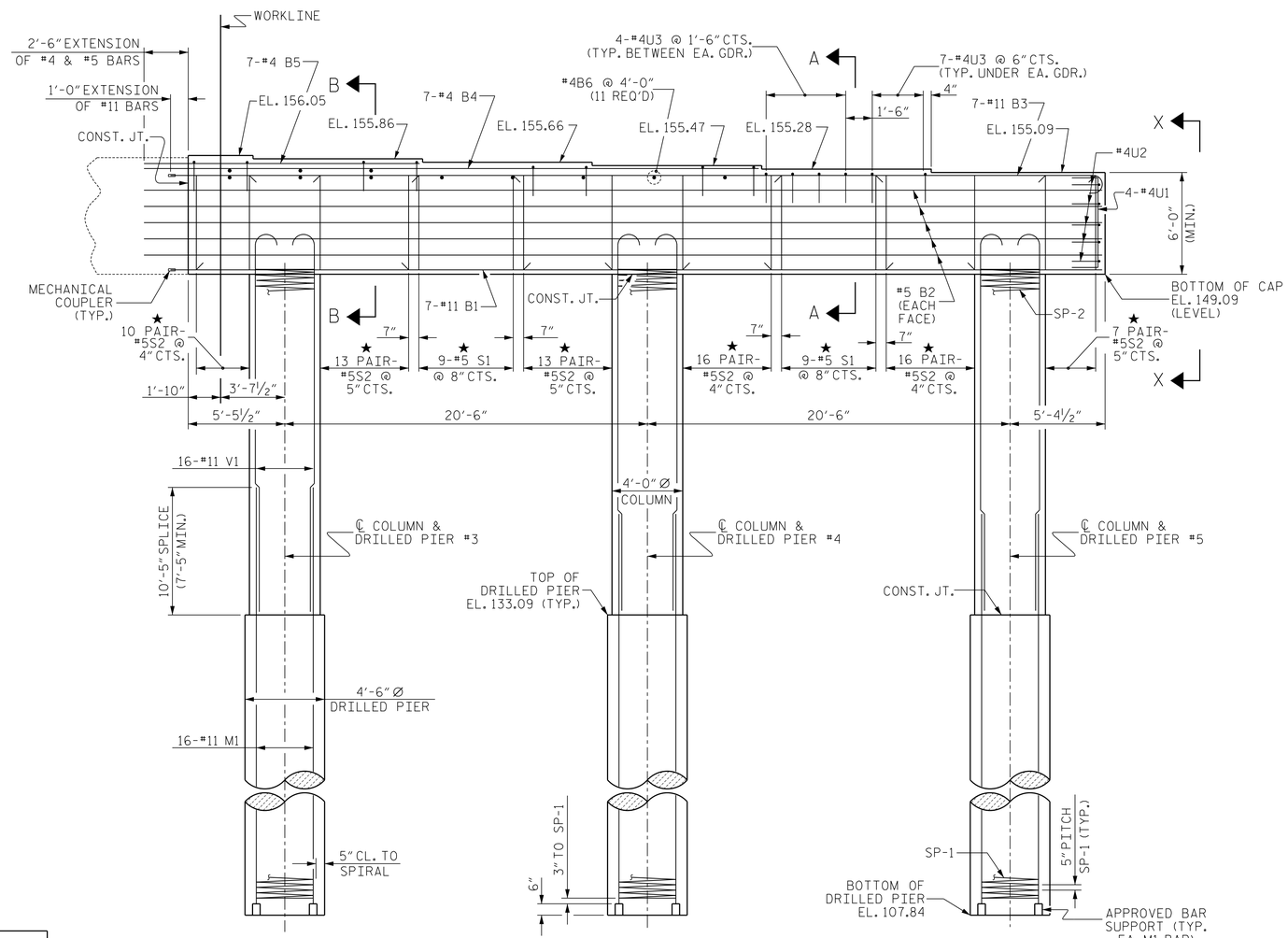

ELEVATION

(INFORMATION SHOWN IS TYPICAL FOR EACH COLUMN AND DRILLED PIER)

NORTH CAROLINA PROFESSIONAL ENGINEER SEAL HARDY L. WILLIS
Hardy L. Willis
7/17/2018 9:22:03 AM EDT

DOCUMENT NOT CONSIDERED FINAL UNLESS ALL SIGNATURES COMPLETED

PROJECT NO. R-3825B
JOHNSTON COUNTY
STATION: 64+20.00 -L-

SHEET 1 OF 4

STATE OF NORTH CAROLINA
DEPARTMENT OF TRANSPORTATION
RALEIGH

SUBSTRUCTURE

BENT 2
(STAGE I)

REVISIONS						SHEET NO.
NO.	BY:	DATE:	NO.	BY:	DATE:	S-47
1			3			TOTAL SHEETS
2			4			59

V&M
Vaughn & Melton
Consulting Engineers
Asheville, North Carolina
828-253-2796
Boone, NC 828-355-9933
Tri-Cities, TN 423-467-8401
Knoxville, TN 865-546-5800
Spartanburg, SC 864-574-4775
Charleston, SC 843-974-5650
Middlesboro, KY 606-248-6600
Atlanta, GA 770-627-3590
Raleigh, NC 919-977-9455
Charlotte, NC 704-357-0488

Copyright © 2006 Vaughn & Melton, Inc. All Rights Reserved

DWN. BY: WDC	DATE: 7/2017
CHKD. BY: ACO	DATE: 12/2017
DES. EGR. OF RECORD: ACO	DATE: 12/2017

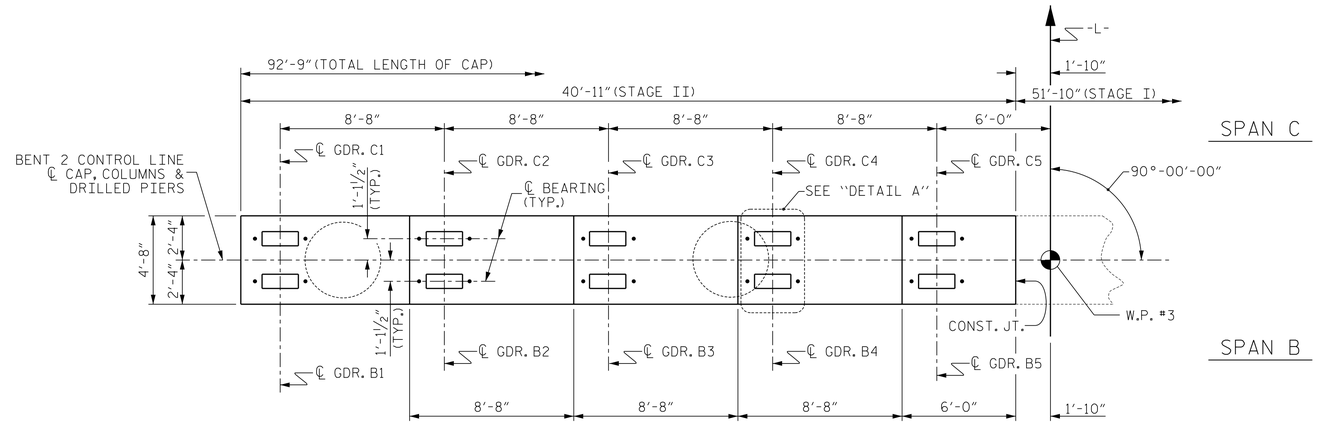

PLAN

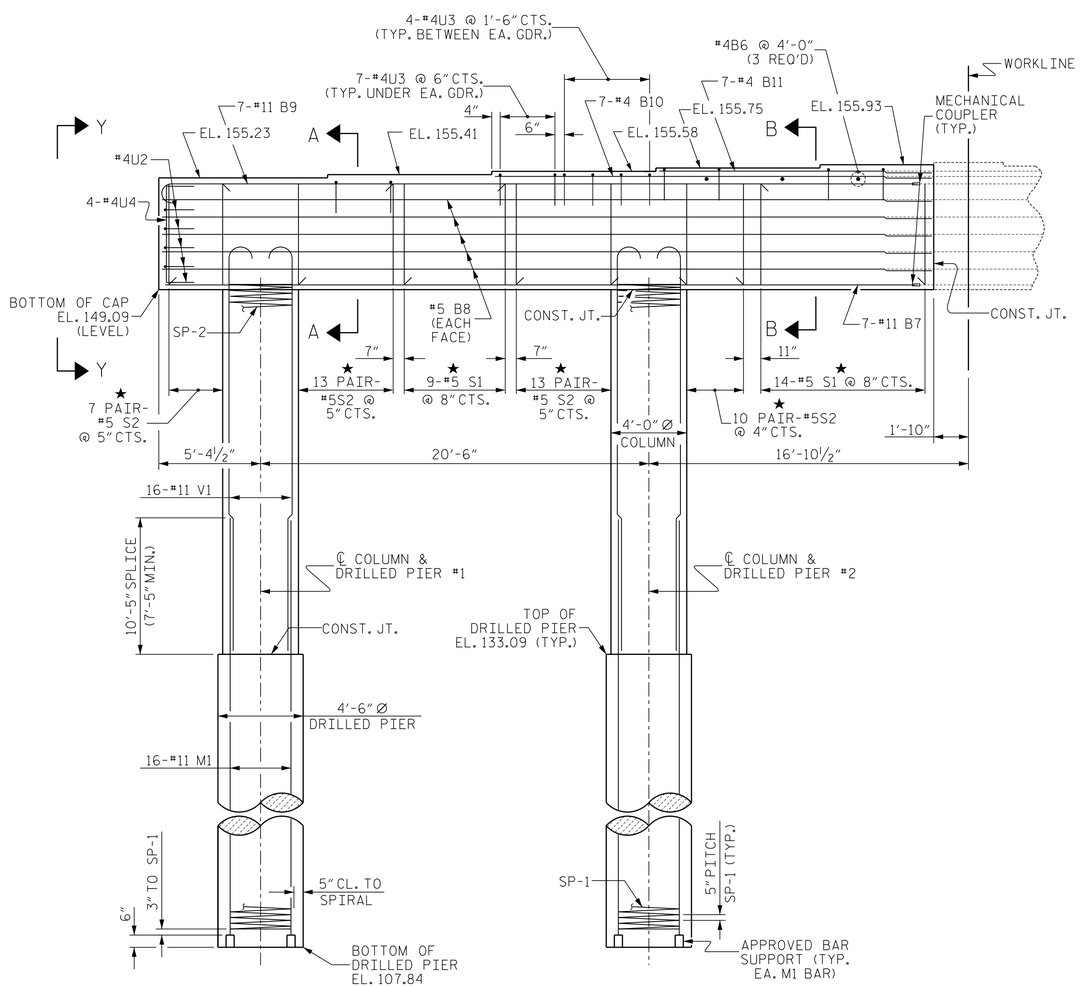

ELEVATION

(INFORMATION SHOWN IS TYPICAL FOR EACH COLUMN AND DRILLED PIER)

NOTES

STIRRUPS IN CAP MAY BE SHIFTED AS NECESSARY TO CLEAR DOWELS.

HOOKS ON "V" BARS MAY BE TURNED AS NECESSARY FOR PLACING REINFORCING STEEL.

FOR DRILLED PIERS, SEE SECTION 411 OF THE STANDARD SPECIFICATIONS.

ALL STEEL IN THE DRILLED PIERS IS INCLUDED IN THE PAY ITEMS FOR "REINFORCING STEEL" AND "SPIRAL COLUMN REINFORCING STEEL."

★ INVERT ALTERNATE STIRRUPS.

DRILLED PIERS SHALL BE TERMINATED ONE FOOT ± ABOVE NORMAL WATER SURFACE ELEVATION FOR SHAFTS LOCATED IN WATER.

THE CONTRACTOR'S ATTENTION IS CALLED TO THE FACT THAT THE LONGITUDINAL REINFORCEMENT FOR DRILLED PIERS IS DETAILED WITH 3 FEET OF EXTRA LENGTH.

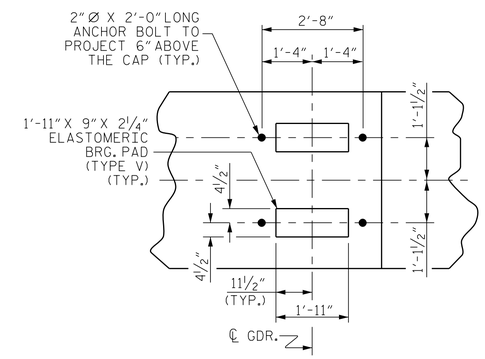

DETAIL A

NORTH CAROLINA PROFESSIONAL SEAL ENGINEER HARDY L. WILLIS

7/17/2018 9:22:03 AM EDT

DOCUMENT NOT CONSIDERED FINAL UNLESS ALL SIGNATURES COMPLETED

PROJECT NO. R-3825B

JOHNSTON COUNTY

STATION: 64+20.00 -L-

SHEET 2 OF 4

STATE OF NORTH CAROLINA
DEPARTMENT OF TRANSPORTATION
RALEIGH

SUBSTRUCTURE

BENT 2
(STAGE II)

DWN. BY: WDC	DATE: 7/2017				
CHKD. BY: ACO	DATE: 12/2017				
DES. EGR. OF RECORD: ACO	DATE: 12/2017				

V&M
Vaughn & Melton
Consulting Engineers
Asheville, North Carolina
828-253-2796
Raleigh, NC 919-977-9455
Charlotte, NC 704-357-0488
Boone, NC 828-355-9933
Tri-Cities, TN 423-467-8401
Knoxville, TN 865-546-5800
Spartanburg, SC 864-574-4775
Charleston, SC 843-974-5650
Middlesboro, KY 606-248-6600
Atlanta, GA 770-627-3590

Copyright © 2006 Vaughn & Melton, Inc. All Rights Reserved

REVISIONS						SHEET NO.
NO.	BY:	DATE:	NO.	BY:	DATE:	S-48
1			3			TOTAL SHEETS
2			4			59

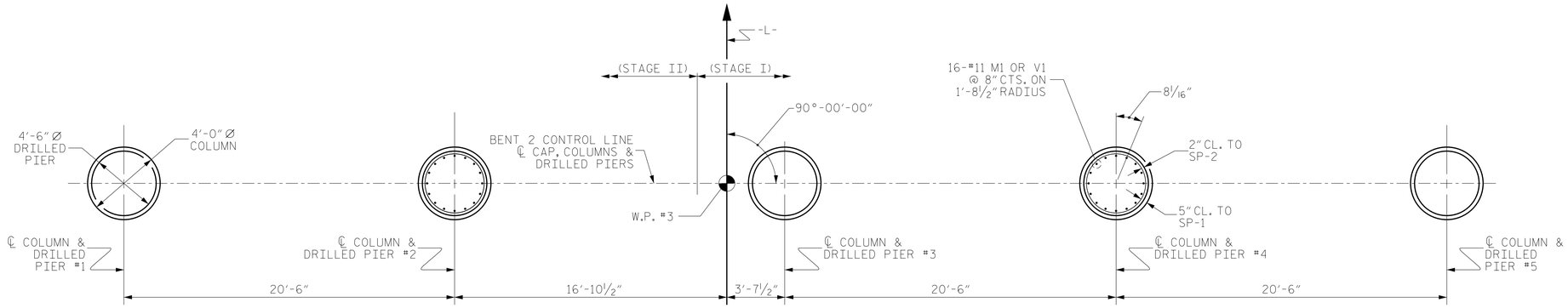

PLAN OF DRILLED PIERS AND COLUMNS

(INFORMATION SHOWN IS TYPICAL FOR EACH COLUMN AND DRILLED PIER)

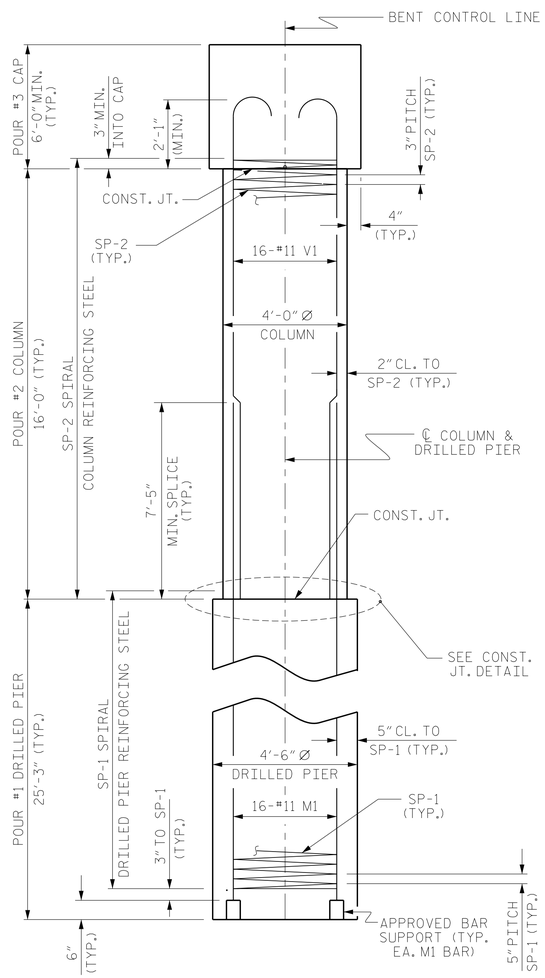

END ELEVATION

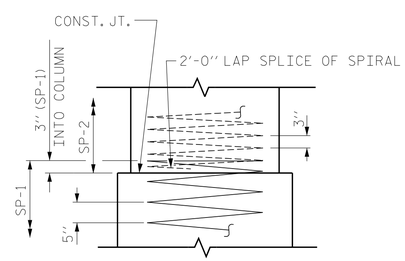

CONSTRUCTION JOINT DETAIL

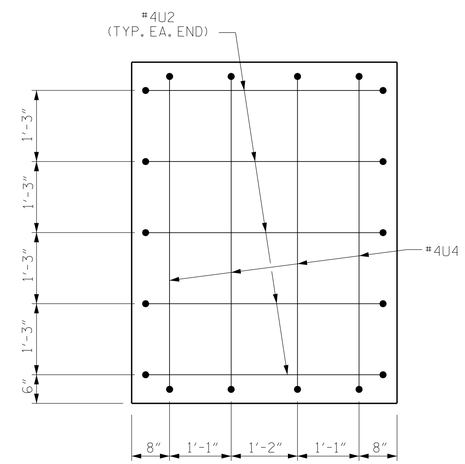

VIEW Y-Y

(LEFT END - STAGE II)

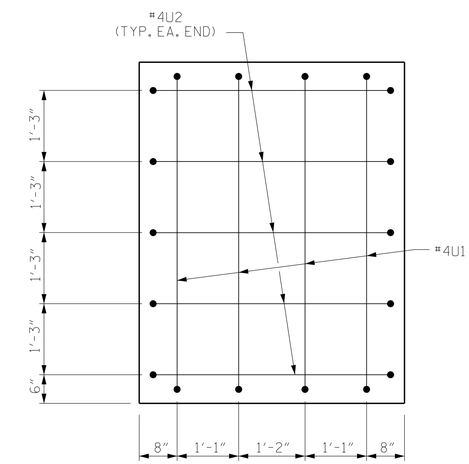

VIEW X-X

(RIGHT END - STAGE I)

NORTH CAROLINA PROFESSIONAL SEAL ENGINEER HARDY L. WILLIS

7/17/2018 9:22:03 AM EDT

DOCUMENT NOT CONSIDERED FINAL UNLESS ALL SIGNATURES COMPLETED

PROJECT NO. R-3825B

JOHNSTON COUNTY

STATION: 64+20.00 -L-

SHEET 3 OF 4

STATE OF NORTH CAROLINA
DEPARTMENT OF TRANSPORTATION
RALEIGH

SUBSTRUCTURE

BENT 2 DETAILS

V&M
Vaughn & Melton
Consulting Engineers
Asheville, North Carolina
828-253-2796
Raleigh, NC 919-977-9455
Charlotte, NC 704-357-0488
Boone, NC 828-355-9933
Tri-Cities, TN 423-467-8401
Knoxville, TN 865-546-5800
Spartanburg, SC 864-574-4775
Charleston, SC 843-974-5650
Middlesboro, KY 606-248-6600
Atlanta, GA 770-627-3590

Copyright © 2006 Vaughn & Melton, Inc. All Rights Reserved

REVISIONS						SHEET NO.
NO.	BY:	DATE:	NO.	BY:	DATE:	S-49
1			3			TOTAL SHEETS
2			4			59

DWN. BY: WDC DATE: 7/2017
CHKD. BY: ACO DATE: 12/2017
DES. EGR. OF RECORD: ACO DATE: 12/2017

BAR TYPES

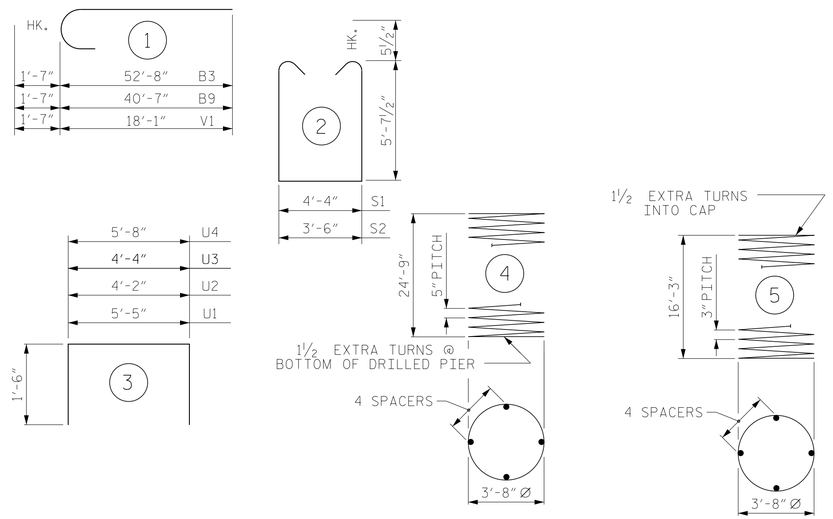

ALL BAR DIMENSIONS ARE OUT TO OUT

BILL OF MATERIAL

BENT 2 - STAGE I

BAR	NO.	SIZE	TYPE	LENGTH	WEIGHT
B1	7	#11	STR	52'-8"	1959
B2	10	#5	STR	54'-2"	565
B3	7	#11	1	54'-3"	2018
B4	7	#4	STR	34'-9"	162
B5	7	#4	STR	15'-7"	73
B6	11	#4	STR	4'-4"	32
M1	48	#11	STR	35'-2"	8968
S1	18	#5	2	16'-6"	310
S2	150	#5	2	15'-8"	2451
U1	4	#4	3	8'-5"	22
U2	5	#4	3	7'-2"	24
U3	62	#4	3	7'-4"	304
V1	48	#11	1	19'-8"	5015
REINFORCING STEEL					21,903 LBS.
SP-1	3	*	4	693'-2"	2169
SP-2	3	**	5	757'-7"	1518
SPIRAL COLUMN REINFORCING STEEL					3687 LBS.

* THE SP-1 SPIRAL REINFORCING STEEL SHALL BE W31 OR D-31 COLD DRAWN WIRE OR #5 PLAIN OR DEFORMED BAR

** THE SP-2 SPIRAL REINFORCING STEEL SHALL BE W20 OR D-20 COLD DRAWN WIRE OR #4 PLAIN OR DEFORMED BAR

CLASS A CONCRETE BREAKDOWN

POUR #2 (COLUMNS)	22.3 C.Y.
POUR #3 (CAP)	57.5 C.Y.
TOTAL CLASS A CONCRETE	79.8 C.Y.

DRILLED PIERS:

DRILLED PIER CONCRETE POUR #1 (DRILLED PIERS)	44.6 C.Y.
4'-6" Ø DRILLED PIERS NOT IN SOIL	43.20 LIN. FT.
4'-6" Ø DRILLED PIERS IN SOIL	32.55 LIN. FT.
PERMANENT STEEL CASING FOR 4'-6" Ø DRILLED PIER	40.77 LIN. FT.
CSL TUBES	321 LIN. FT.

BENT 2 - STAGE II

BAR	NO.	SIZE	TYPE	LENGTH	WEIGHT
B6	3	#4	STR	4'-4"	9
B7	7	#11	STR	40'-7"	1509
B8	10	#5	STR	40'-7"	423
B9	7	#11	1	42'-2"	1568
B10	7	#4	STR	23'-0"	108
B11	7	#4	STR	14'-4"	67
M1	32	#11	STR	35'-2"	5979
S1	23	#5	2	16'-6"	396
S2	86	#5	2	15'-8"	1405
U2	5	#4	3	7'-2"	24
U3	51	#4	3	7'-4"	250
U4	4	#4	3	8'-8"	23
V1	32	#11	1	19'-8"	3344
REINFORCING STEEL					15,105 LBS.
SP-1	2	*	4	693'-2"	1446
SP-2	2	**	5	757'-7"	1012
SPIRAL COLUMN REINFORCING STEEL					2458 LBS.

* THE SP-1 SPIRAL REINFORCING STEEL SHALL BE W31 OR D-31 COLD DRAWN WIRE OR #5 PLAIN OR DEFORMED BAR

** THE SP-2 SPIRAL REINFORCING STEEL SHALL BE W20 OR D-20 COLD DRAWN WIRE OR #4 PLAIN OR DEFORMED BAR

CLASS A CONCRETE BREAKDOWN

POUR #2 (COLUMNS)	14.9 C.Y.
POUR #3 (CAP)	45.7 C.Y.
TOTAL CLASS A CONCRETE	60.6 C.Y.

DRILLED PIERS:

DRILLED PIER CONCRETE POUR #1 (DRILLED PIERS)	29.7 C.Y.
4'-6" Ø DRILLED PIERS NOT IN SOIL	28.80 LIN. FT.
4'-6" Ø DRILLED PIERS IN SOIL	21.70 LIN. FT.
PERMANENT STEEL CASING FOR 4'-6" Ø DRILLED PIER	20.18 LIN. FT.
CSL TUBES	214 LIN. FT.

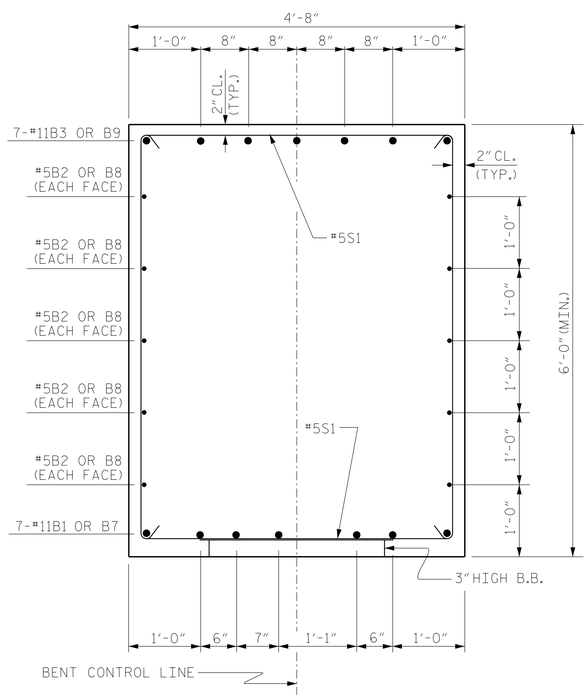

SECTION A-A

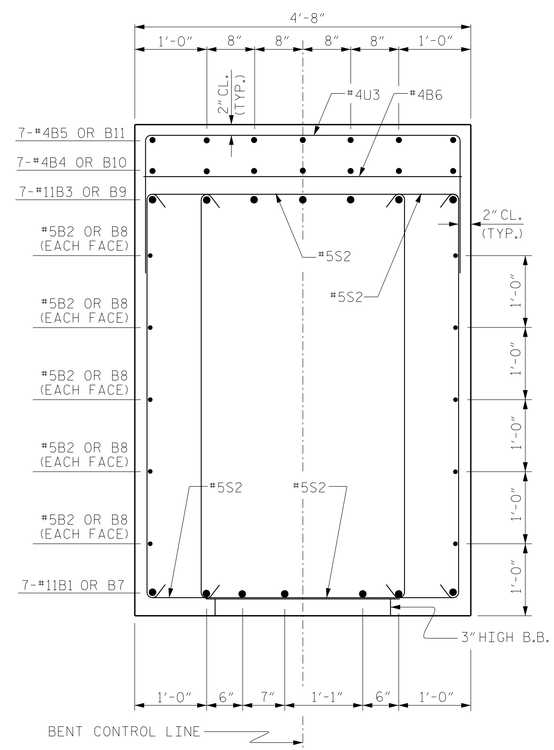

SECTION B-B

(SHOWING STIRRUP PAIRS)

NORTH CAROLINA PROFESSIONAL SEAL 19077 ENGINEER HARDY L. WILLIS

7/17/2018 9:22:03 AM EDT

DOCUMENT NOT CONSIDERED FINAL UNLESS ALL SIGNATURES COMPLETED

V&M
Vaughn & Melton
Consulting Engineers
Asheville, North Carolina
828-253-2796
Raleigh, NC 919-977-9455
Charlotte, NC 704-357-0488
Boone, NC 828-355-9933
Tri-Cities, TN 423-467-8401
Knoxville, TN 865-546-5800
Spartanburg, SC 864-574-4775
Charleston, SC 843-974-5650
Middlesboro, KY 606-248-6600
Atlanta, GA 770-627-3590

Copyright © 2006 Vaughn & Melton, Inc. All Rights Reserved

PROJECT NO. R-3825B

JOHNSTON COUNTY

STATION: 64+20.00 -L-

SHEET 4 OF 4

STATE OF NORTH CAROLINA
DEPARTMENT OF TRANSPORTATION
RALEIGH

SUBSTRUCTURE

BENT 2 DETAILS

REVISIONS						SHEET NO.
NO.	BY:	DATE:	NO.	BY:	DATE:	S-50
1			3			TOTAL SHEETS
2			4			59

DWN. BY: WDC DATE: 7/2017
CHKD. BY: ACO DATE: 12/2017
DES. EGR. OF RECORD: ACO DATE: 12/2017

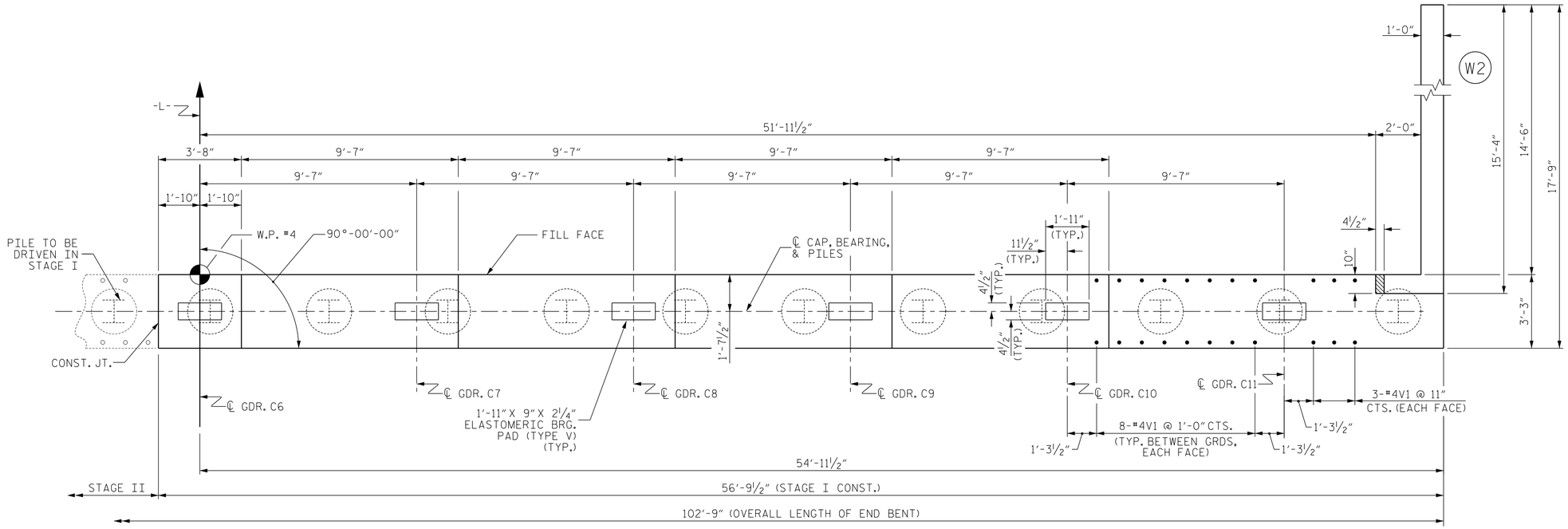

PLAN

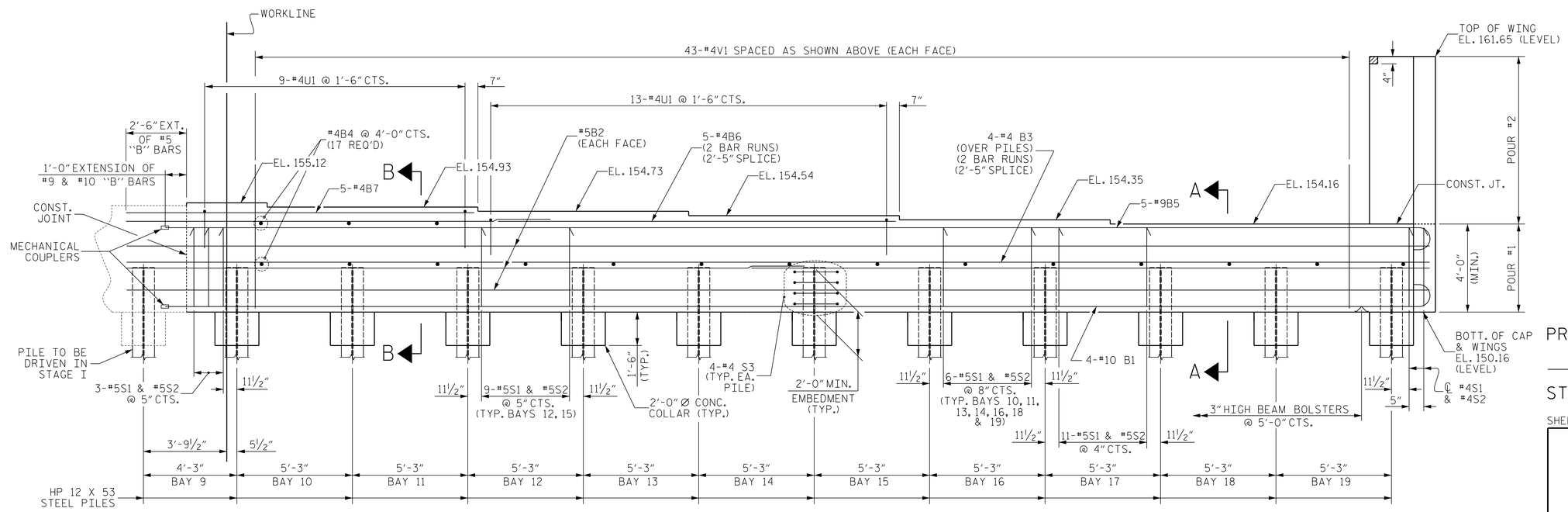

ELEVATION

NOTES

THE TOP SURFACE OF THE END BENT CAP, EXCEPT THE BEARING AREA, SHALL BE RAKED TO A DEPTH OF ¼".

THE CONCRETE IN THE SHADED AREA OF THE WING SHALL BE POURED AFTER THE PARAPET IS CAST IF SLIP FORMING IS USED.

FOR SECTION A-A AND B-B, SEE SHEET 4 OF 4.

FOR PILE SPLICE DETAILS, SEE SHEET 4 OF 4.

FOR WING DETAILS, SEE SHEET 3 OF 4.

NORTH CAROLINA PROFESSIONAL SEAL ENGINEER HARDY L. WILLIS 28221 DOCUSIGNED BY:

7/17/2018 9:22:03 AM EDT

DOCUMENT NOT CONSIDERED FINAL UNLESS ALL SIGNATURES COMPLETED

V&M Vaughn & Melton Consulting Engineers
Asheville, North Carolina
828-253-2796
Boone, NC 828-355-9933
Tri-Cities, TN 423-467-8401
Knoxville, TN 865-546-5800
Spartanburg, SC 864-574-4775
Charleston, SC 843-974-5650
Middlesboro, KY 606-248-6600
Atlanta, GA 770-627-3590
Raleigh, NC 919-977-9455
Charlotte, NC 704-357-0488

Copyright © 2006 Vaughn & Melton, Inc. All Rights Reserved

PROJECT NO. R-3825B

JOHNSTON COUNTY

STATION: 64+20.00 -L-

SHEET 1 OF 4

STATE OF NORTH CAROLINA
DEPARTMENT OF TRANSPORTATION
RALEIGH

SUBSTRUCTURE

END BENT 2
(STAGE I)

REVISIONS						SHEET NO.
NO.	BY:	DATE:	NO.	BY:	DATE:	S-51
1			3			TOTAL SHEETS
2			4			59

DWN. BY: WDC	DATE: 7/2017
CHKD. BY: ACO	DATE: 12/2017
DES. EGR. OF RECORD: ACO	DATE: 12/2017

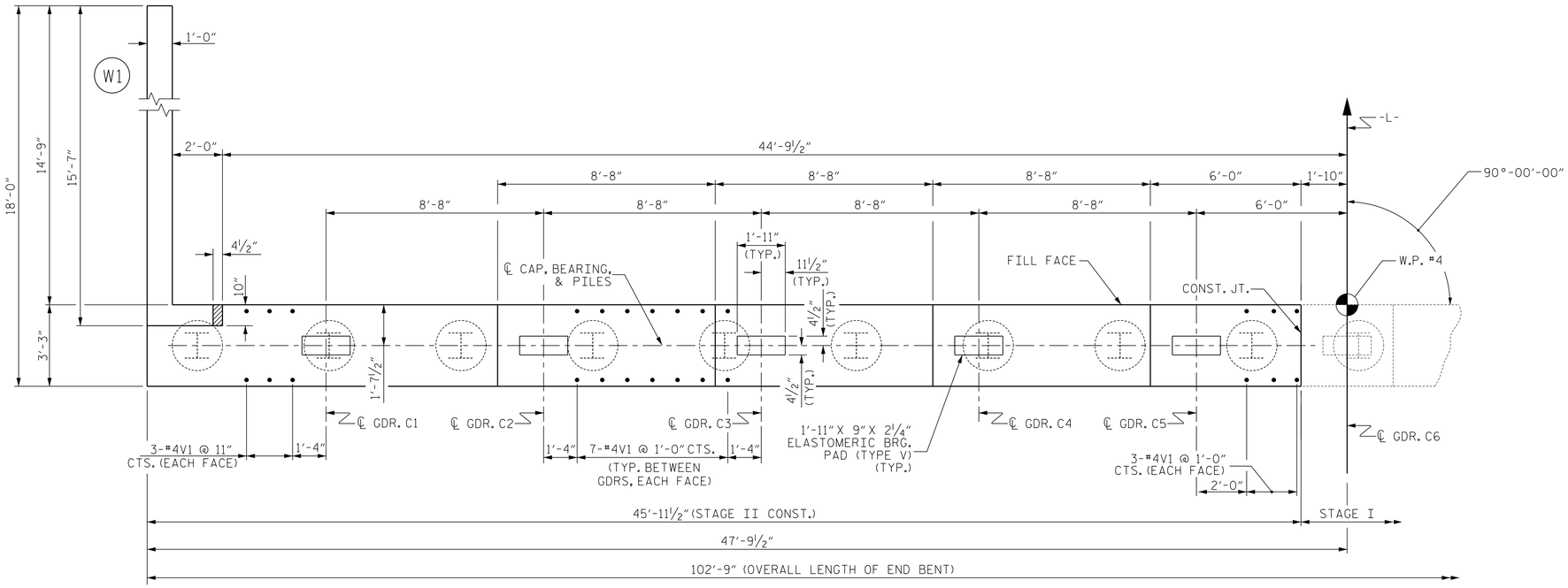

PLAN

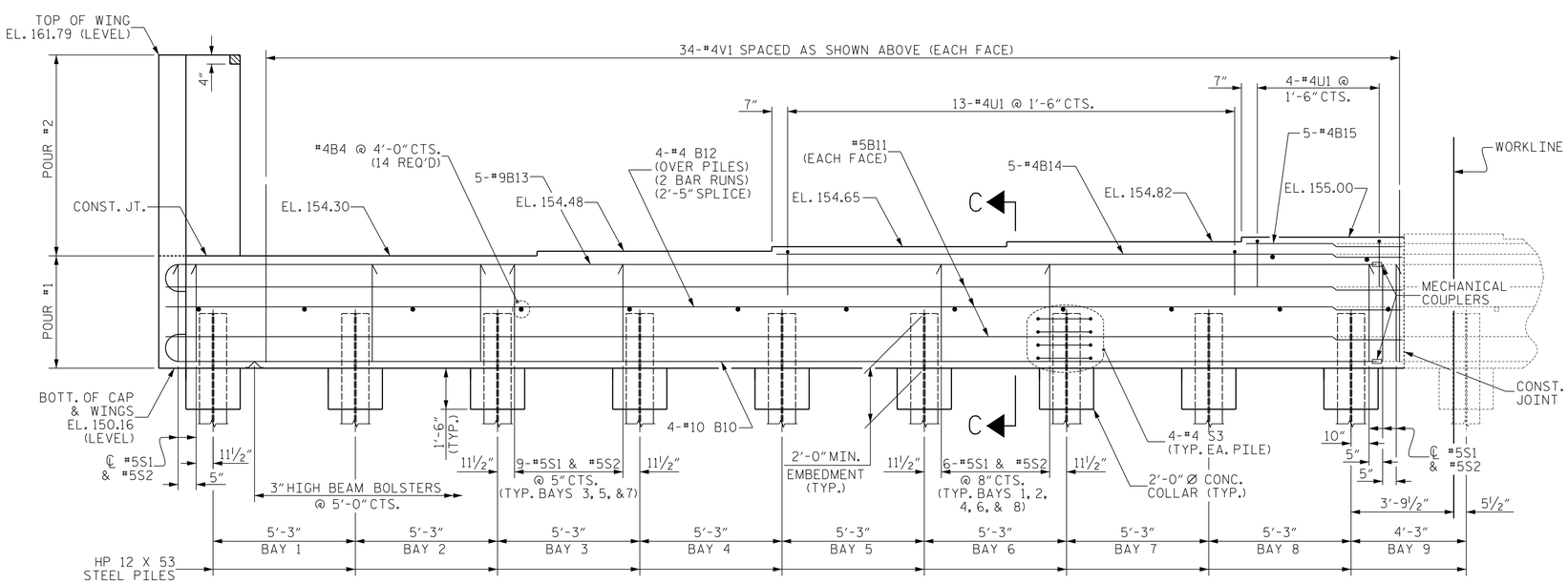

ELEVATION

NOTES

THE TOP SURFACE OF THE END BENT CAP, EXCEPT THE BEARING AREA, SHALL BE RAKED TO A DEPTH OF ¼".

THE CONCRETE IN THE SHADED AREA OF THE WING SHALL BE POURED AFTER THE PARAPET IS CAST IF SLIP FORMING IS USED.

FOR SECTION C-C, SEE SHEET 4 OF 4.

FOR PILE SPLICE DETAILS, SEE SHEET 4 OF 4.

FOR WING DETAILS, SEE SHEET 3 OF 4.

NORTH CAROLINA PROFESSIONAL SEAL ENGINEER HARDY L. WILLIS

7/17/2018 9:22:03 AM EDT

DOCUMENT NOT CONSIDERED FINAL UNLESS ALL SIGNATURES COMPLETED

V&M
Vaughn & Melton
Consulting Engineers
Asheville, North Carolina
828-253-2796
Raleigh, NC 919-977-9455
Charlotte, NC 704-357-0488
Boone, NC 828-355-9933
Tri-Cities, TN 423-467-8401
Knoxville, TN 865-546-5800
Spartanburg, SC 864-574-4775
Charleston, SC 843-974-5650
Middlesboro, KY 606-248-6600
Atlanta, GA 770-627-3590

Copyright © 2006 Vaughn & Melton, Inc. All Rights Reserved

PROJECT NO. R-3825B
JOHNSTON COUNTY
STATION: 64+20.00 -L-

SHEET 2 OF 4

STATE OF NORTH CAROLINA
DEPARTMENT OF TRANSPORTATION
RALEIGH

SUBSTRUCTURE

END BENT 2
(STAGE II)

REVISIONS						SHEET NO.
NO.	BY:	DATE:	NO.	BY:	DATE:	S-52
1			3			TOTAL SHEETS
2			4			59

DWN. BY: WDC	DATE: 7/2017
CHKD. BY: ACO	DATE: 12/2017
DES. EGR. OF RECORD: ACO	DATE: 12/2017

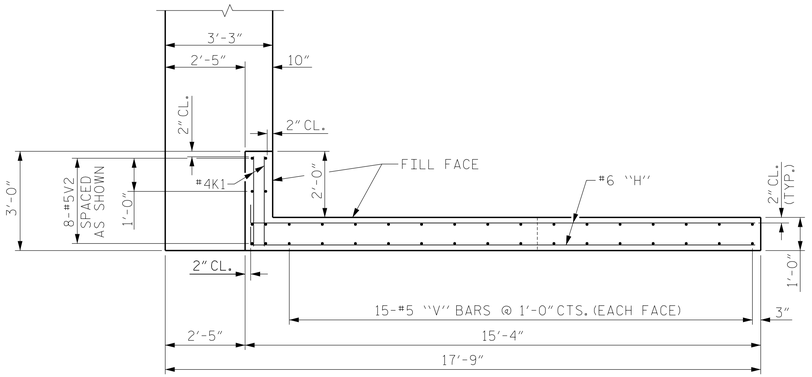

PLAN W2

(STAGE 1)

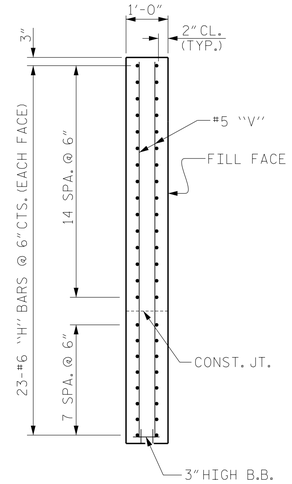

SECTION X-X

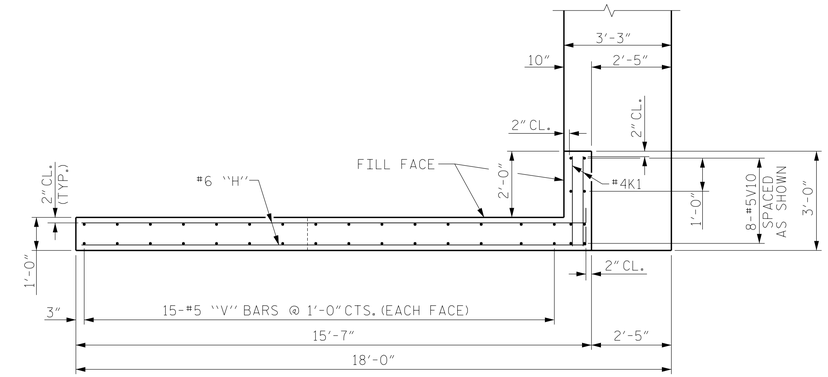

PLAN W1

(STAGE II)

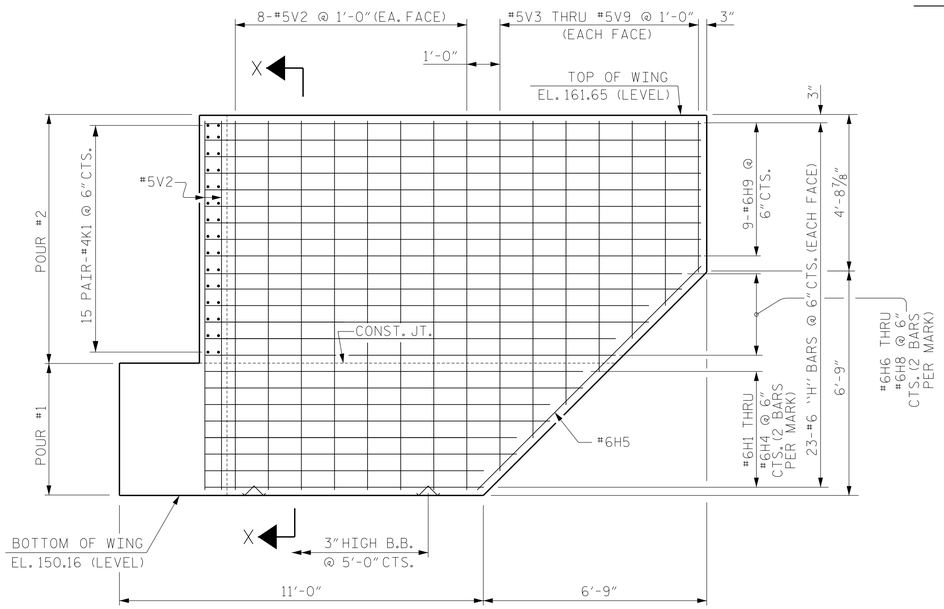

ELEVATION W2

(STAGE I)

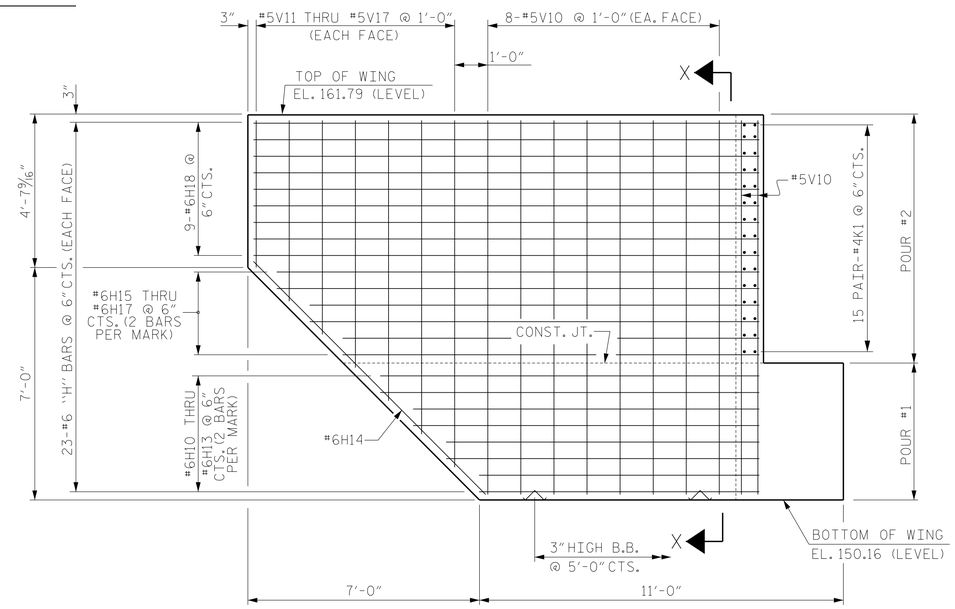

ELEVATION W1

(STAGE II)

PROJECT NO. R-3825B

JOHNSTON COUNTY

STATION: 64+20.00 -L-

SHEET 3 OF 4

STATE OF NORTH CAROLINA
DEPARTMENT OF TRANSPORTATION
RALEIGH

SUBSTRUCTURE

END BENT 2 WING DETAILS

NORTH CAROLINA PROFESSIONAL SEAL ENGINEER HARDY L. WILLIS

7/17/2018 9:22:03 AM EDT

DOCUMENT NOT CONSIDERED FINAL UNLESS ALL SIGNATURES COMPLETED

V&M Vaughn & Melton
Consulting Engineers
Asheville, North Carolina
828-253-2796
Raleigh, NC 919-977-9455
Charlotte, NC 704-357-0488
Boone, NC 828-355-9933
Tri-Cities, TN 423-467-8401
Knoxville, TN 865-546-5800
Spartanburg, SC 864-574-4775
Charleston, SC 843-974-5650
Middlesboro, KY 606-248-6600
Atlanta, GA 770-627-3590

Copyright © 2006 Vaughn & Melton, Inc. All Rights Reserved

DWN. BY: WDC	DATE: 7/2017	
CHKD. BY: ACO	DATE: 12/2017	
DES. EGR. OF RECORD: ACO	DATE: 12/2017	

REVISIONS						SHEET NO.
NO.	BY:	DATE:	NO.	BY:	DATE:	S-53
1			3			TOTAL SHEETS
2			4			59

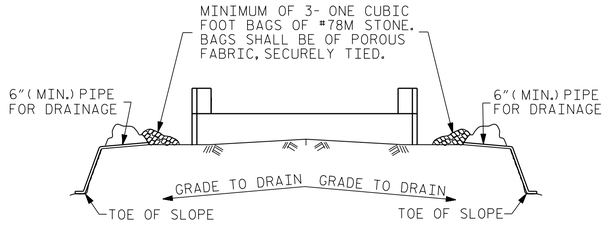

BAGGED STONE AND PIPE SHALL BE PLACED IMMEDIATELY AFTER COMPLETION OF END BENT EXCAVATION. PIPE MAY BE EITHER CONCRETE, CORRUGATED STEEL, CORRUGATED ALUMINUM ALLOY, OR CORRUGATED PLASTIC. PERFORATED PIPE WILL NOT BE ALLOWED.

BAGGED STONE SHALL REMAIN IN PLACE UNTIL THE ENGINEER DIRECTS THAT IT BE REMOVED. THE CONTRACTOR SHALL REMOVE AND DISPOSE OF SILT ACCUMULATIONS AT BAGGED STONE WHEN SO DIRECTED BY THE ENGINEER. BAGS SHALL BE REMOVED AND REPLACED WHENEVER THE ENGINEER DETERMINES THAT THEY HAVE DETERIORATED AND LOST THEIR EFFECTIVENESS.

NO SEPARATE PAYMENT WILL BE MADE FOR THIS WORK AND THE ENTIRE COST OF THIS WORK SHALL BE INCLUDED IN THE UNIT CONTRACT PRICE BID FOR THE SEVERAL PAY ITEMS.

TEMPORARY DRAINAGE AT END BENT

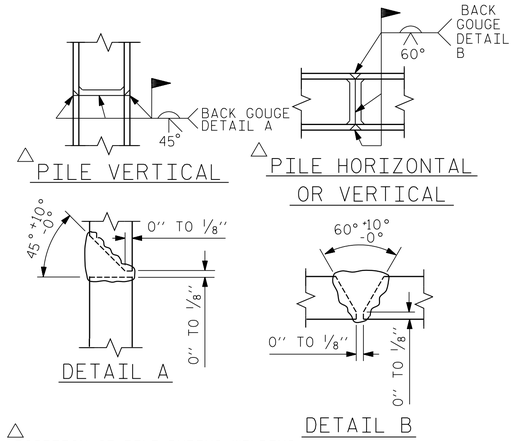

△ POSITION OF PILE DURING WELDING.

PILE SPLICE DETAILS

BAR TYPES

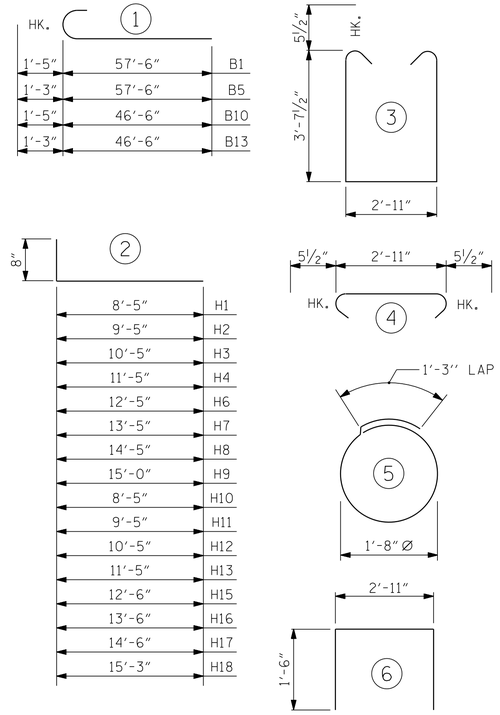

ALL BAR DIMENSIONS ARE OUT TO OUT.

STAGE I	STAGE II
HP 12 X 53 STEEL PILES NO: 12 LIN. FT.= 300	HP 12 X 53 STEEL PILES NO: 8 LIN. FT.= 200
PILE DRIVING EQUIPMENT SETUP FOR HP 12 X 53 STEEL PILES NO: 12	PILE DRIVING EQUIPMENT SETUP FOR HP 12 X 53 STEEL PILES NO: 8

BILL OF MATERIAL

STAGE I

BAR	NO.	SIZE	TYPE	LENGTH	WEIGHT
B1	4	#10	1	58'-11"	1014
B2	6	#5	STR	59'-2"	370
B3	8	#4	STR	30'-10"	165
B4	17	#4	STR	2'-11"	33
B5	5	#9	1	58'-9"	999
B6	10	#4	STR	18'-6"	124
B7	5	#4	STR	15'-7"	52
H1	4	#6	2	9'-1"	55
H2	4	#6	2	10'-1"	61
H3	4	#6	2	11'-1"	67
H4	4	#6	2	12'-1"	73
H5	2	#6	STR	9'-7"	29
H6	4	#6	2	13'-1"	79
H7	4	#6	2	14'-1"	85
H8	4	#6	2	15'-1"	91
H9	18	#6	2	15'-8"	424
K1	30	#4	STR	2'-8"	53
S1	73	#5	3	11'-1"	844
S2	73	#5	4	3'-10"	292
S3	44	#4	5	6'-6"	191
U1	22	#4	6	5'-11"	87
V1	86	#4	STR	6'-6"	373
V2	24	#5	STR	11'-2"	280
V3	2	#5	STR	10'-6"	22
V4	2	#5	STR	9'-4"	19
V5	2	#5	STR	8'-2"	17
V6	2	#5	STR	7'-0"	15
V7	2	#5	STR	5'-10"	12
V8	2	#5	STR	4'-8"	10
V9	2	#5	STR	3'-6"	7

REINFORCING STEEL 5943 LBS.

CLASS A CONCRETE BREAKDOWN

POUR #1	CAP, LOWER PART OF WING & COLLARS	33.3 C.Y.
POUR #2	UPPER PART OF WING	4.6 C.Y.
TOTAL CLASS A CONCRETE		37.9 C.Y.

STAGE II

BAR	NO.	SIZE	TYPE	LENGTH	WEIGHT
B10	4	#10	1	47'-11"	825
B11	6	#5	STR	45'-9"	286
B12	8	#4	STR	24'-0"	128
B4	14	#4	STR	2'-11"	27
B13	5	#9	1	47'-9"	812
B14	5	#4	STR	23'-2"	77
B15	5	#4	STR	5'-10"	19
H10	4	#6	2	9'-1"	55
H11	4	#6	2	10'-1"	61
H12	4	#6	2	11'-1"	67
H13	4	#6	2	12'-1"	73
H14	2	#6	STR	9'-11"	30
H15	4	#6	2	13'-2"	79
H16	4	#6	2	14'-2"	85
H17	4	#6	2	15'-2"	91
H18	18	#6	2	15'-11"	430
K1	30	#4	STR	2'-8"	53
S1	62	#5	3	11'-1"	717
S2	62	#5	4	3'-10"	248
S3	36	#4	5	6'-6"	156
U1	17	#4	6	5'-11"	67
V1	68	#4	STR	6'-6"	295
V10	24	#5	STR	11'-3"	282
V11	2	#5	STR	10'-5"	22
V12	2	#5	STR	9'-5"	20
V13	2	#5	STR	8'-5"	18
V14	2	#5	STR	7'-5"	15
V15	2	#5	STR	6'-5"	13
V16	2	#5	STR	5'-5"	11
V17	2	#5	STR	4'-5"	9

REINFORCING STEEL 5071 LBS.

CLASS A CONCRETE BREAKDOWN

POUR #1	CAP, LOWER PART OF WING & COLLARS	27.6 C.Y.
POUR #2	UPPER PART OF WING	4.7 C.Y.
TOTAL CLASS A CONCRETE		32.3 C.Y.

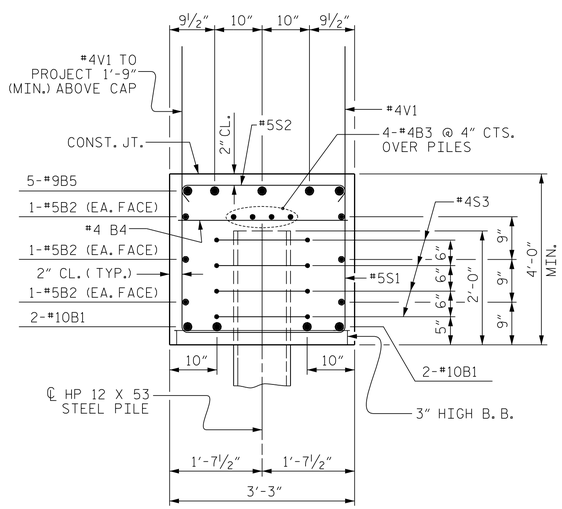

SECTION A-A

(STAGE I)
(CONCRETE COLLAR NOT SHOWN FOR CLARITY)

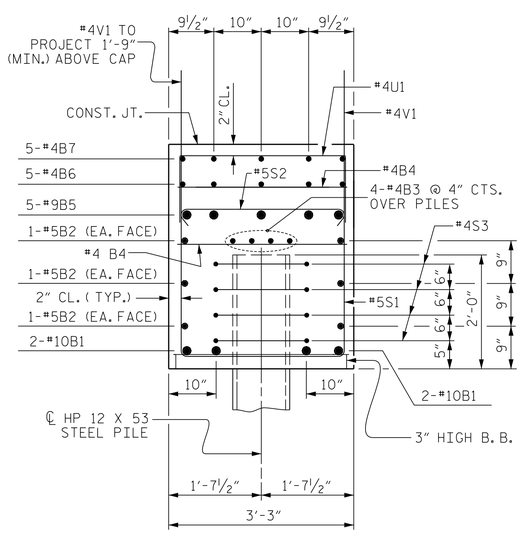

SECTION B-B

(STAGE I)
(CONCRETE COLLAR NOT SHOWN FOR CLARITY)

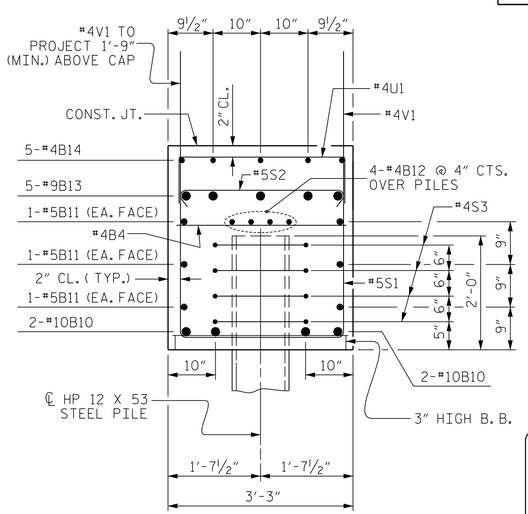

SECTION C-C

(STAGE II)
(CONCRETE COLLAR NOT SHOWN FOR CLARITY)

NORTH CAROLINA PROFESSIONAL SEAL ENGINEER HARDY L. WILLIS

7/17/2018 9:22:03 AM EDT

DOCUMENT NOT CONSIDERED FINAL UNLESS ALL SIGNATURES COMPLETED

V&M Vaughn & Melton Consulting Engineers
Asheville, North Carolina 828-253-2796
Raleigh, NC 919-977-9455
Charlotte, NC 704-357-0488
Boone, NC 828-355-9933
Tri-Cities, TN 423-467-8401
Knoxville, TN 865-546-5800
Spartanburg, SC 864-574-4775
Charleston, SC 843-974-5650
Middlesboro, KY 606-248-6600
Atlanta, GA 770-627-3590

Copyright © 2006 Vaughn & Melton, Inc. All Rights Reserved

PROJECT NO. R-3825B
JOHNSTON COUNTY
STATION: 64+20.00 -L-

SHEET 4 OF 4

STATE OF NORTH CAROLINA
DEPARTMENT OF TRANSPORTATION
RALEIGH

SUBSTRUCTURE

END BENT 2 DETAILS

REVISIONS						SHEET NO.
NO.	BY:	DATE:	NO.	BY:	DATE:	S-54
1			3			TOTAL SHEETS
2			4			59

DWN. BY: WDC	DATE: 7/2017
CHKD. BY: ACO	DATE: 12017
DES. EGR. OF RECORD: ACO	DATE: 12017

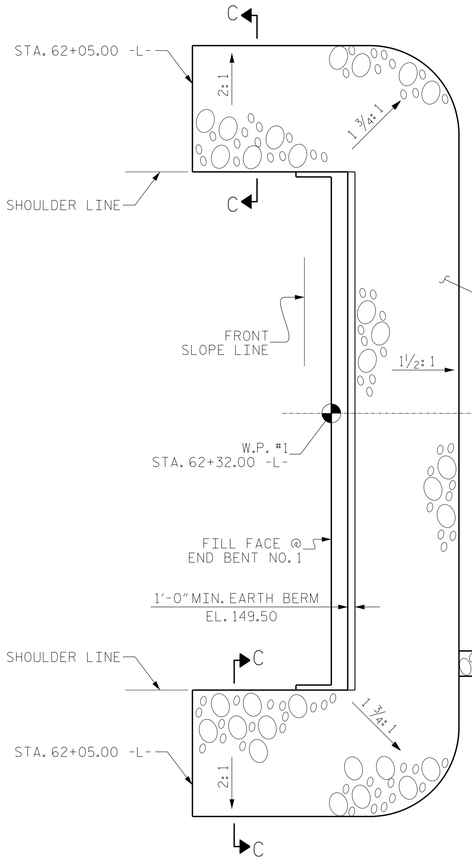

PLAN @ END BENT NO. 1

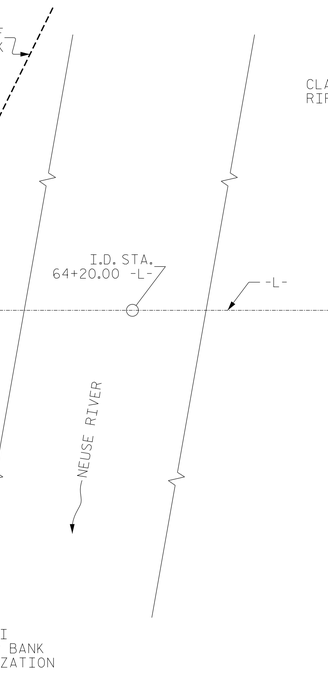

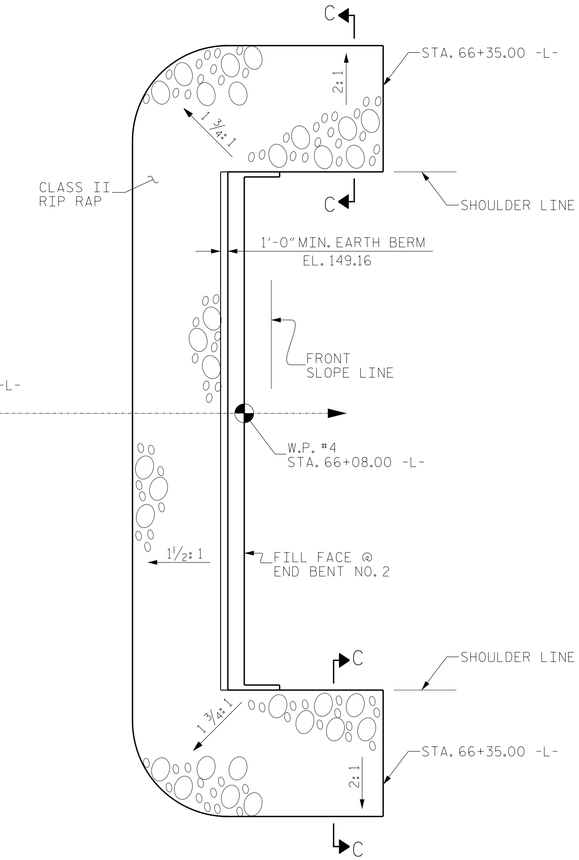

PLAN @ END BENT NO. 2

ESTIMATED QUANTITIES		
BRIDGE @ STA. 64+20.00 -L-	RIP RAP CLASS II (2'-0" THICK)	GEOTEXTILE FOR DRAINAGE
	TONS	SQUARE YARDS
END BENT 1	390	435
BANK STABILIZATION	323	359
END BENT 2	320	355
TOTAL	1033	1149

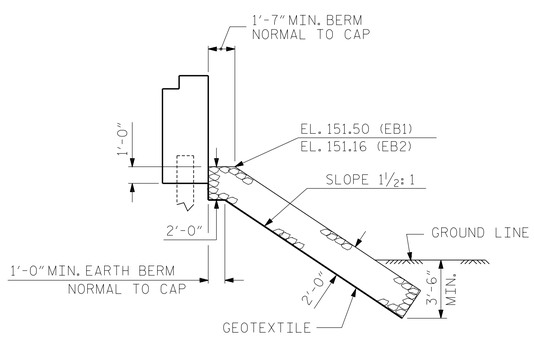

℄ SECTION
BERM RIP RAPPED

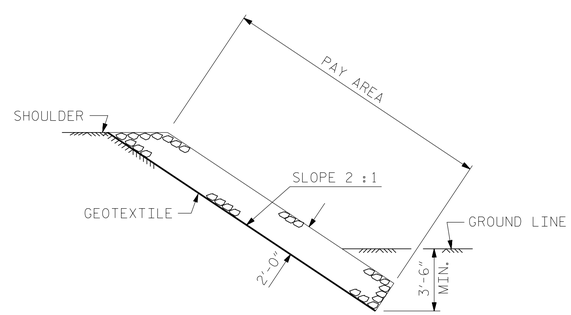

SECTION C-C

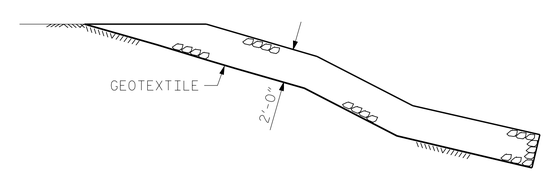

SECTION D-D

7/17/2018 9:22:03 AM EDT

DOCUMENT NOT CONSIDERED FINAL UNLESS ALL SIGNATURES COMPLETED

V&M
Vaughn & Melton
Consulting Engineers
Asheville, North Carolina
828-253-2796
Raleigh, NC 919-977-9455
Charlotte, NC 704-357-0488
Boone, NC 828-355-9933
Tri-Cities, TN 423-467-8401
Knoxville, TN 865-546-5800
Spartanburg, SC 864-574-4775
Charleston, SC 843-974-5650
Middlesboro, KY 606-248-6600
Atlanta, GA 770-627-3590

Copyright © 2006 Vaughn & Melton, Inc. All Rights Reserved

PROJECT NO. R-3825B
JOHNSTON COUNTY
STATION: 64+20.00 -L-

STATE OF NORTH CAROLINA
DEPARTMENT OF TRANSPORTATION
RALEIGH

RIP RAP DETAILS

DWN. BY: WDC DATE: 4/2017
CHKD. BY: ACO DATE: 12/2017
DES. EGR. OF RECORD: ACO DATE: 12/2017

REVISIONS						
NO.	BY:	DATE:	NO.	BY:	DATE:	
1			3			
2			4			

SHEET NO. S-55
TOTAL SHEETS 59

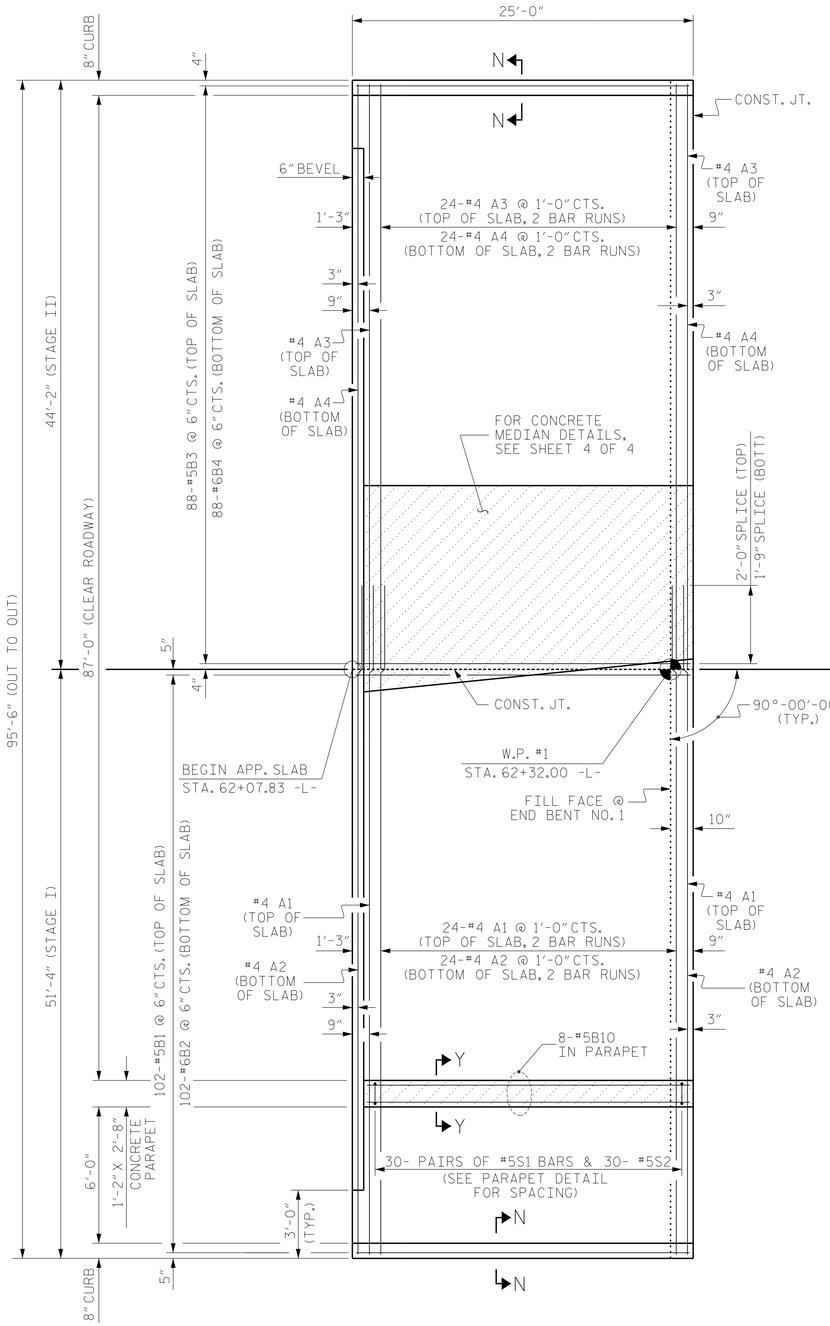

PLAN @ END BENT NO. 1

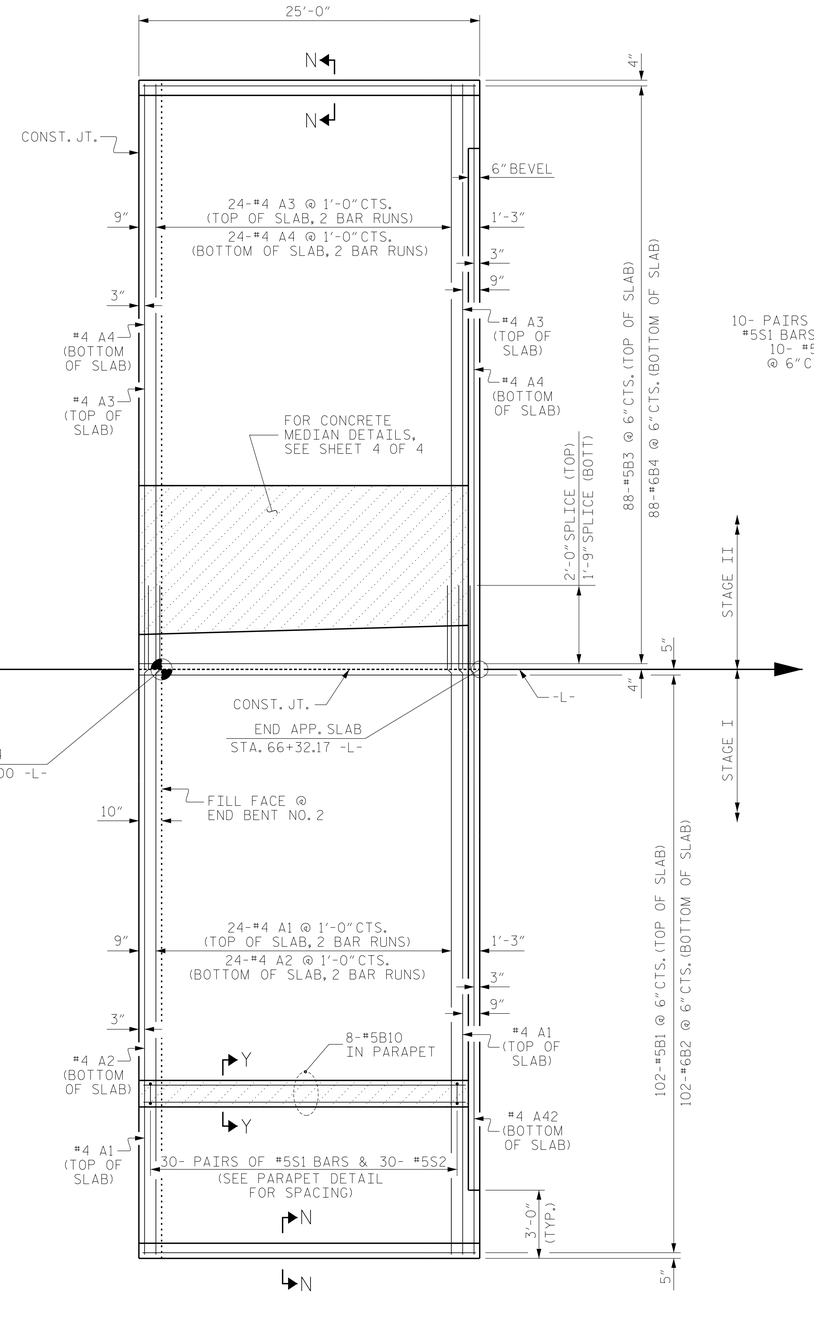

PLAN @ END BENT NO. 2

(DIMENSIONS SHOWN ARE TYPICAL FOR BOTH APPROACH SLABS)

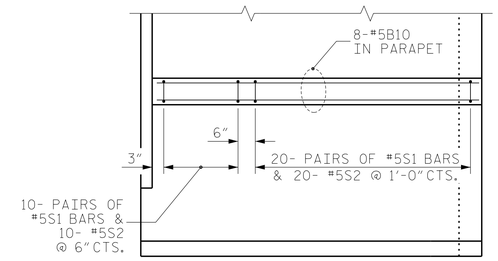

PARAPET DETAIL

(END BENT 1 SHOWN, END BENT 2 SIMILAR BY ROTATION)

NORTH CAROLINA PROFESSIONAL SEAL ENGINEER HARDY L. WILLIS

7/17/2018 9:22:03 AM EDT

DOCUMENT NOT CONSIDERED FINAL UNLESS ALL SIGNATURES COMPLETED

V&M Vaughn & Melton Consulting Engineers
Asheville, North Carolina 828-253-2796
Raleigh, NC 919-977-9455
Boone, NC 828-355-9933
Tri-Cities, TN 423-467-8401
Knoxville, TN 865-546-5800
Spartanburg, SC 864-574-4775
Charleston, SC 843-974-5650
Middlesboro, KY 606-248-6600
Charlotte, NC 704-357-0488
Atlanta, GA 770-627-3590

Copyright © 2006 Vaughn & Melton, Inc. All Rights Reserved

PROJECT NO. R-3825B
JOHNSTON COUNTY
STATION: 64+20.00 -L-

SHEET 1 OF 4

STATE OF NORTH CAROLINA
DEPARTMENT OF TRANSPORTATION
RALEIGH

BRIDGE APPROACH SLAB FOR INTEGRAL ABUTMENT

DWN. BY: WDC DATE: 11/2017
CHKD. BY: ACO DATE: 12/2017
DES. EGR. OF RECORD: ACO DATE: 12/2017

REVISIONS						
NO.	BY:	DATE:	NO.	BY:	DATE:	
1			3			
2			4			

SHEET NO. S-56
TOTAL SHEETS 59

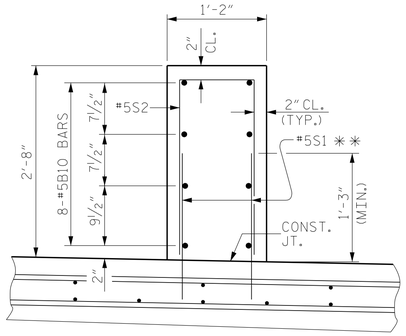

SECTION Y-Y

PARAPET NOTES

CONCRETE PARAPET ON EACH APPROACH SLAB SHALL NOT BE CAST UNTIL ALL SLAB CONCRETE IN THE APPROCH SALB HAS BEEN CAST AND HAS REACHED A MINIMUM COMPRESSIVE STRENGTH OF 3,000 PSI.

ALL REINFORCING STEEL IN THE CONCRETE PARAPET SHALL BE EPOXY COATED.

GROOVED CONTRACTION JOINTS, ½" IN DEPTH, SHALL BE TOOLED IN ALL EXPOSED FACES OF THE PARAPET AND IN ACCORDANCE WITH ARTICLE 825-10(B) OF THE STANDARD SPECIFICATIONS. A CONTRACTION JOINT SHALL BE LOCATED AT EACH THIRD POINT BETWEEN PARAPET EXPANSION JOINTS. ONLY ONE CONTRACTION JOINT IS REQUIRED AT MIDPOINT OF PARAPET SEGMENTS LESS THAN 20 FEET IN LENGTH AND NO CONTRACTION JOINTS ARE REQUIRED FOR THOSE SEGMENTS LESS THAN 10 FEET IN LENGTH.

FOR LOCATION OF GUARDRAIL ANCHOR ASSEMBLIES, SEE "GUARDRAIL ANCHORAGE DETAILS FOR 1'-2" X 2'-8" CONCRETE PARAPET" SHEET.

THE CONCRETE PARAPET WILL BE PAID FOR AT THE LIN. FT. PRICE BID FOR "1'-2" X 2'-8" CONCRETE PARAPET".

✱✱ THE CONTRACTOR SHALL USE ADHESIVELY ANCHORED #5S1 BARS. LEVEL 2 FIELD TESTING IS REQUIRED, AND THE YIELD LOAD OF THE #5S1 IS 18.6 KIPS. FOR ADHESIVELY ANCHORED ANCHOR BOLTS OR DOWELS, SEE STANDARD SPECIFICATIONS.

BILL OF MATERIAL

1'-2" X 2'-8" CONCRETE PARAPET

BAR	NO.	SIZE	TYPE	LENGTH	WEIGHT
✱ B10	16	#5	STR	24'-2"	403
✱ S1	120	#5	STR	1'-9"	219
✱ S2	60	#5	1	5'-6"	344
✱ EPOXY COATED REINFORCING STEEL				LBS.	966
CLASS AA CONCRETE				C. Y.	5.6
1'-2" X 2'-8" CONCRETE PARAPET				LIN. FT.	49.0

BAR TYPE

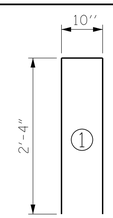

ALL BAR DIMENSIONS ARE OUT TO OUT.

NOTES

APPROACH SLAB SHALL NOT BE CONSTRUCTED PRIOR TO COMPLETION OF THE BRIDGE DECK.

FOR TEMPORARY GEOTEXTILE WALL INCLUDING GEOTEXTILE, 6"Ø DRAINAGE PIPE, WELDED WIRE FORM, AND SELECT MATERIAL, SEE ROADWAY PLANS.

GEOTEXTILE (TYPE 1 OR TYPE 5) SHALL BE IN ACCORDANCE WITH THE STANDARD SPECIFICATIONS SECTION 1056.

SELECT MATERIAL BACKFILL (CLASS V OR CLASS VI) SHALL BE IN ACCORDANCE WITH STANDARD SPECIFICATIONS SECTION 1016.

SELECT MATERIAL BACKFILL IS TO BE CONTINUOUS ALONG FILL FACE OF BACKWALL FROM OUTSIDE EDGE TO OUTSIDE EDGE OF APPROACH SLAB.

FOR THE 6"Ø DRAINAGE PIPE OUTLET(S), SEE ROADWAY STANDARD DRAWINGS.

AREA BETWEEN THE WINGWALL AND APPROACH SLAB SHALL BE GRADED TO DRAIN THE WATER AWAY FROM THE FILL FACE OF THE BRIDGE AND SHALL BE PAVED. SEE ROADWAY PLANS.

THE JOINT OPENING AT THE APPROACH SLAB/DECK INTERFACE SHALL BE SAWED NO MORE THAN 12 HOURS AFTER THE APPROACH SLAB IS CAST. THE JOINT SHALL BE CLEANED OF ALL DEBRIS BEFORE THE SEALANT IS APPLIED. THE JOINT SEALER MATERIAL SHALL CONFORM TO THE REQUIREMENTS OF SECTION 1028-3 OF THE STANDARD SPECIFICATIONS.

AT THE CONTRACTORS OPTION, "TYPE A - ALTERNATE APPROACH FILL" IN LIEU OF "TYPE I - STANDARD APPROACH FILL" MAY BE CONSTRUCTED AT NO ADDITIONAL COST TO THE DEPARTMENT. SEE SHEET 2 OF 2 FOR DETAILS AND NOTES.

BILL OF MATERIAL

@ END BENT NO. 1 -STAGE I

BAR	NO.	SIZE	TYPE	LENGTH	WEIGHT
✱ A1	52	#4	STR	27'-7"	958
A2	52	#4	STR	27'-4"	949
✱ B1	102	#5	STR	24'-8"	2624
B2	102	#6	STR	24'-2"	3702
REINFORCING STEEL				LBS.	4651
✱ EPOXY COATED REINFORCING STEEL				LBS.	3582
CLASS AA CONCRETE					
SLAB AND CURB				C. Y.	55.3

BILL OF MATERIAL

@ END BENT NO. 2 -STAGE I

BAR	NO.	SIZE	TYPE	LENGTH	WEIGHT
✱ A1	52	#4	STR	27'-7"	958
A2	52	#4	STR	27'-4"	949
✱ B1	102	#5	STR	24'-8"	2624
B2	102	#6	STR	24'-2"	3702
REINFORCING STEEL				LBS.	4651
✱ EPOXY COATED REINFORCING STEEL				LBS.	3582
CLASS AA CONCRETE					
SLAB AND CURB				C. Y.	55.3

@ END BENT NO. 1 -STAGE II

BAR	NO.	SIZE	TYPE	LENGTH	WEIGHT
✱ A3	52	#4	STR	22'-11"	796
A4	52	#4	STR	22'-9"	790
✱ B3	88	#5	STR	24'-8"	2264
B4	88	#6	STR	24'-2"	3194
✱ T1	4	#4	STR	11'-0"	29
✱ T2	4	#4	STR	10'-6"	28
✱ T3	4	#4	STR	10'-0"	27
✱ T4	4	#4	STR	9'-6"	25
✱ M1	8	#4	STR	24'-2"	129
REINFORCING STEEL				LBS.	3984
✱ EPOXY COATED REINFORCING STEEL				LBS.	3298
CLASS AA CONCRETE					
SLAB AND CURB				C. Y.	47.6
CONCRETE MEDIAN				C. Y.	4.0
TOTAL				C. Y.	51.6

@ END BENT NO. 2 -STAGE II

BAR	NO.	SIZE	TYPE	LENGTH	WEIGHT
✱ A3	52	#4	STR	22'-11"	796
A4	52	#4	STR	22'-9"	790
✱ B3	88	#5	STR	24'-8"	2264
B4	88	#6	STR	24'-2"	3194
✱ T5	4	#4	STR	7'-6"	20
✱ T6	4	#4	STR	7'-3"	19
✱ T7	4	#4	STR	7'-1"	19
✱ T8	4	#4	STR	6'-11"	18
✱ M1	6	#4	STR	24'-2"	97
REINFORCING STEEL				LBS.	3984
✱ EPOXY COATED REINFORCING STEEL				LBS.	3233
CLASS AA CONCRETE					
SLAB AND CURB				C. Y.	47.6
CONCRETE MEDIAN				C. Y.	2.9
TOTAL				C. Y.	50.5

SPLICE LENGTHS

BAR SIZE	EPOXY COATED	UNCOATED
#4	2'-0"	1'-9"
#5	2'-6"	2'-2"
#6	3'-10"	2'-7"

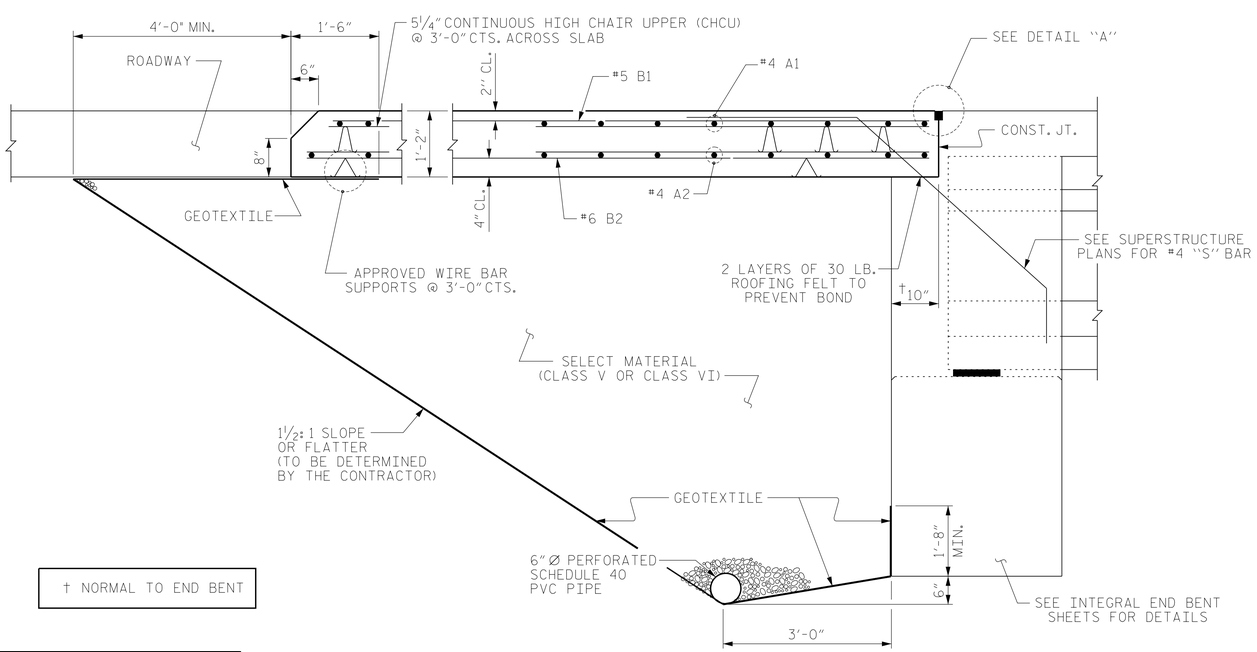

† NORMAL TO END BENT

SECTION THRU SLAB

(TYPE I - STANDARD APPROACH FILL)

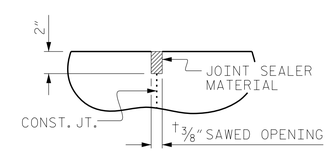

DETAIL "A"

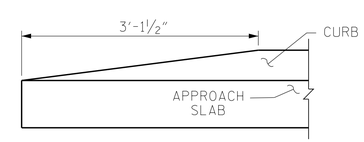

END OF CURB WITHOUT SHOULDER BERM GUTTER

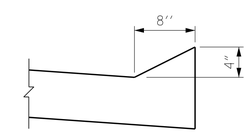

SECTION N-N

NORTH CAROLINA PROFESSIONAL SEAL ENGINEER HARDY L. WILLIS

7/17/2018 9:22:03 AM EDT

DOCUMENT NOT CONSIDERED FINAL UNLESS ALL SIGNATURES COMPLETED

PROJECT NO. R-3825B

JOHNSTON COUNTY

STATION: 64+20.00 -L-

SHEET 2 OF 4

STATE OF NORTH CAROLINA
DEPARTMENT OF TRANSPORTATION
RALEIGH

STANDARD

BRIDGE APPROACH SLAB FOR INTEGRAL ABUTMENT WITH FLEXIBLE PAVEMENT

V&M
Vaughn & Melton
Consulting Engineers
Asheville, North Carolina
828-253-2796
Raleigh, NC 919-977-9455
Charlotte, NC 704-357-0488
Boone, NC 828-355-9933
Tri-Cities, TN 423-467-8401
Knoxville, TN 865-546-5800
Spartanburg, SC 864-574-4775
Charleston, SC 843-974-5650
Middlesboro, KY 606-248-6600
Atlanta, GA 770-627-3590

Copyright © 2006 Vaughn & Melton, Inc. All Rights Reserved

ASSEMBLED BY : WDC	DATE : 12/2017	
CHECKED BY : ACO	DATE : 12/2017	
DRAWN BY : TLA 10/05	REV. 12/21/11	MAA/GM
CHECKED BY : GM 5/06	REV. 6/13	MAA/GM
	REV. 12/17	MAA/THC

REVISIONS						SHEET NO.
NO.	BY:	DATE:	NO.	BY:	DATE:	S-57
1			3			TOTAL SHEETS
2			4			59

STD. NO. BAS5

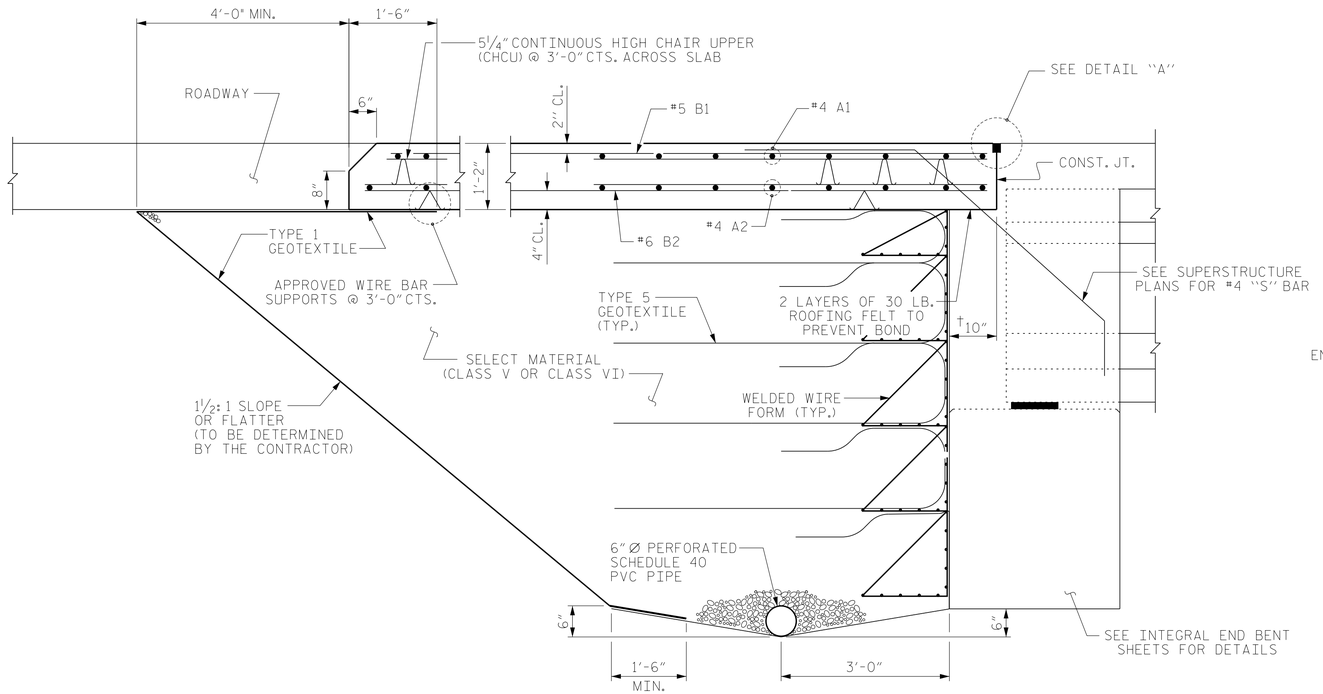

SECTION THRU SLAB

(TYPE A - ALTERNATE APPROACH FILL)

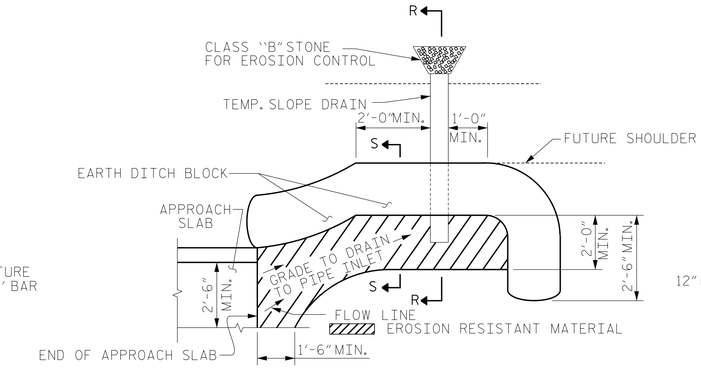

NOTE: IMMEDIATELY AFTER THE CONSTRUCTION OF THE APPROACH SLAB, THE CONTRACTOR SHALL PROVIDE TEMPORARY BERM AND SLOPE DRAIN. CONTRACTOR SHALL GRADE TO PIPE INLET AND PROVIDE EROSION RESISTANT MATERIAL AS SHOWN. THE EROSION RESISTANT MATERIAL SHALL BE EITHER 1) ASPHALT PLANT MIX, TYPE 1 OR TYPE 2, MIN. 2" DEPTH, 2) EROSION CONTROL MAT, OR 3) CONCRETE, AS DIRECTED BY THE ENGINEER. THE SLOPE DRAIN SHALL CONSIST OF A NON-PERFORATED TEMPORARY DRAINAGE PIPE, 12 INCHES IN DIAMETER.

PLAN VIEW

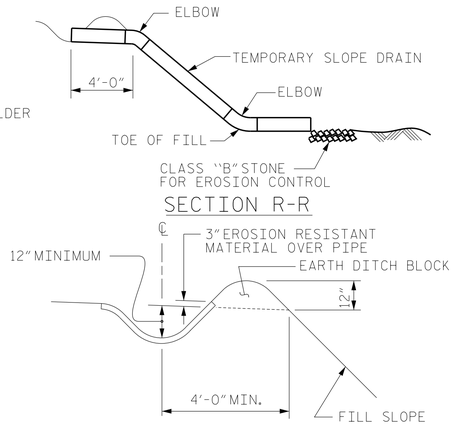

SECTION S-S

TEMPORARY BERM AND SLOPE DRAIN DETAILS

(TO BE USED WHEN SHOULDER BERM GUTTER IS REQUIRED)

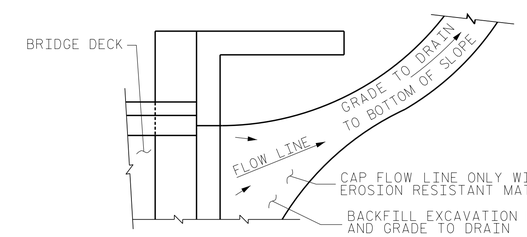

NOTE: IF THE APPROACH SLAB IS NOT CONSTRUCTED IMMEDIATELY AFTER THE BACKFILLING OF THE END BENT EXCAVATION, GRADE TO DRAIN TO THE BOTTOM OF THE SLOPE AND PROVIDE EROSION RESISTANT MATERIAL, SUCH AS FIBERGLASS ROVING OR AS DIRECTED BY THE ENGINEER TO PREVENT SOIL EROSION AND TO PROTECT THE AREA ADJACENT TO THE STRUCTURE. THE CONTRACTOR WILL BE REQUIRED TO REMOVE THESE MATERIALS PRIOR TO CONSTRUCTION OF THE APPROACH SLAB.

TEMPORARY DRAINAGE DETAIL

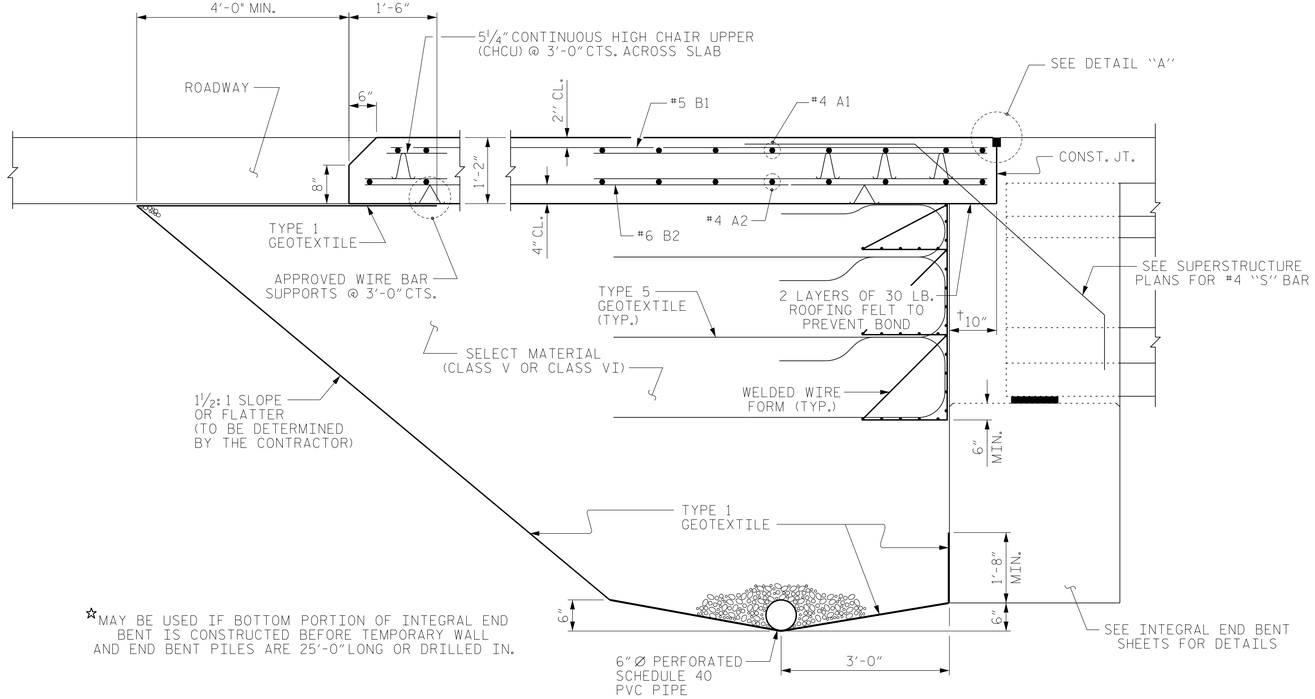

☆MAY BE USED IF BOTTOM PORTION OF INTEGRAL END BENT IS CONSTRUCTED BEFORE TEMPORARY WALL AND END BENT PILES ARE 25'-0" LONG OR DRILLED IN.

SECTION THRU SLAB

☆(TYPE A - ALTERNATE APPROACH FILL)

PROJECT NO. R-3825B

JOHNSTON COUNTY

STATION: 64+20.00 -L-

SHEET 3 OF 4

STATE OF NORTH CAROLINA
DEPARTMENT OF TRANSPORTATION
RALEIGH

STANDARD

BRIDGE APPROACH SLAB DETAILS

NORTH CAROLINA PROFESSIONAL ENGINEER SEAL 028772 HARDY L. WILLIS

7/17/2018 9:22:03 AM EDT

DOCUMENT NOT CONSIDERED FINAL UNLESS ALL SIGNATURES COMPLETED

V&M Vaughn & Melton Consulting Engineers
Asheville, North Carolina 828-253-2796
Raleigh, NC 919-977-9455 | Charlotte, NC 704-357-0488
Boone, NC 828-355-9933
Tri-Cities, TN 423-467-8401
Knoxville, TN 865-546-5800
Spartanburg, SC 864-574-4775
Charleston, SC 843-974-5650
Middlesboro, KY 606-248-6600
Atlanta, GA 770-627-3590
Copyright © 2006 Vaughn & Melton, Inc. All Rights Reserved

ASSEMBLED BY : WDC	DATE : 12-2017		
CHECKED BY : ACO	DATE : 12/2017		
DRAWN BY : TLA 10/05	REV. 12/21/11	MAA/GM	
CHECKED BY : GM 5/06	REV. 6/13	MAA/GM	
	REV. 12/17	MAA/THC	

REVISIONS						SHEET NO.
NO.	BY:	DATE:	NO.	BY:	DATE:	S-58
1			3			TOTAL SHEETS
2			4			59

STD. NO. BAS5

12/20/2017
$$$$$$$$$$$$$$$$$$$$$$$$DGN$$$$$$$$$$$$$$$$$$$$$$$$
User:wdcrutcher

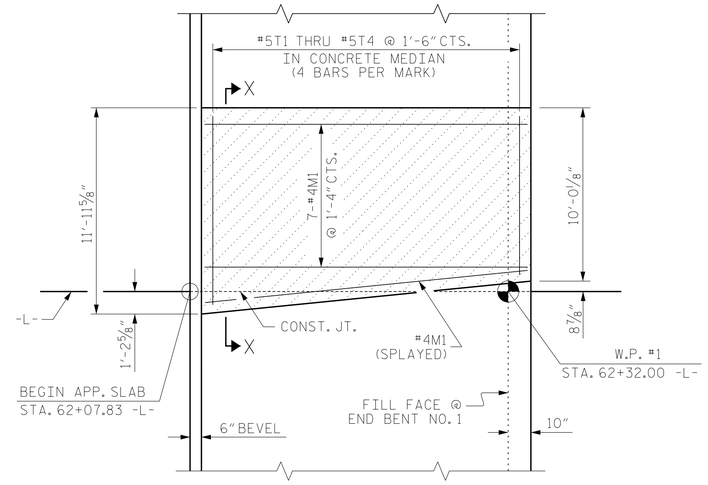

CONCRETE MEDIAN @ END BENT NO. 1

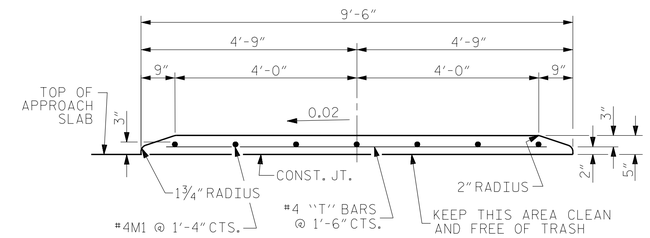

SECTION X-X

(MEDIAN WIDTH AND NUMBER OF "B" BARS VARY)

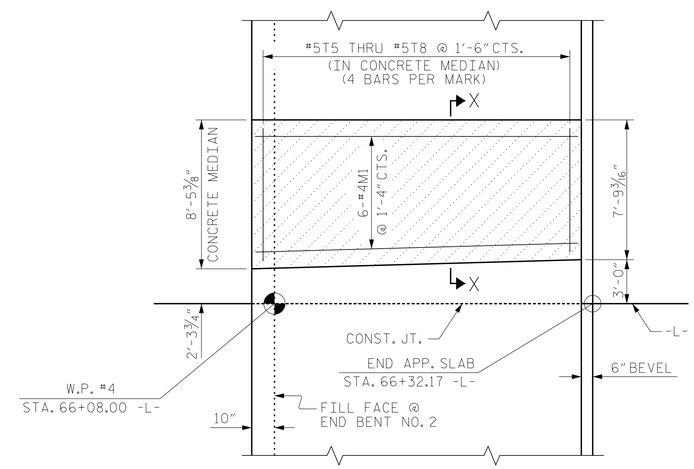

CONCRETE MEDIAN @ END BENT NO. 2

PROJECT NO. R-3825B

JOHNSTON COUNTY

STATION: 64+20.00 -L-

SHEET 4 OF 4

STATE OF NORTH CAROLINA
DEPARTMENT OF TRANSPORTATION
RALEIGH

BRIDGE APPROACH SLAB
FOR INTEGRAL ABUTMENT

NORTH CAROLINA PROFESSIONAL ENGINEER SEAL 019681 HARDY L. WILLIS

7/17/2018 9:22:03 AM EDT

DOCUMENT NOT CONSIDERED
FINAL UNLESS ALL
SIGNATURES COMPLETED

Vaughn & Melton
Consulting Engineers
Asheville, North Carolina
828-253-2796
Raleigh, NC 919-977-9455
Charlotte, NC 704-357-0488
Boone, NC 828-355-9933
Tri-Cities, TN 423-467-8401
Knoxville, TN 865-546-5800
Spartanburg, SC 864-574-4775
Charleston, SC 843-974-5650
Middlesboro, KY 606-248-6600
Atlanta, GA 770-627-3590

Copyright © 2006 Vaughn & Melton, Inc. All Rights Reserved

DWN. BY: WDC DATE: 12/2017
CHKD. BY: ACO DATE: 12/2017
DES. EGR. OF RECORD: ACO DATE: 12/2017

REVISIONS						SHEET NO.
NO.	BY:	DATE:	NO.	BY:	DATE:	S-59
1			3			TOTAL SHEETS
2			4			59