This electronic collection of documents is provided for the convenience of the user and is Not a Certified Document –

The documents contained herein were originally issued and sealed by the individuals whose names and license numbers appear on each page, on the dates appearing with their signature on that page.
This file or an individual page shall not be considered a certified document.

DocuSign Envelope ID: 012F15DE-0016-446C-A97E-4D45C1109D1A

DOCUMENT NOT CONSIDERED FINAL UNLESS ALL SIGNATURES COMPLETED

Prepared In the Office of:
AECOM
AECOM TECHNICAL SERVICES OF NORTH CAROLINA, INC.
701 CORPORATE CENTER DRIVE, SUITE 475, RALEIGH, NC 27607
919-854-6200 919-854-6259 (fax)
F - 0342

PROJECT REFERENCE NO.	SHEET NO.
R-3825B	UC-31

DESIGNED BY:
DRAWN BY:
CHECKED BY:
APPROVED BY:
REVISED:

NORTH CAROLINA DEPARTMENT OF TRANSPORTATION

UTILITIES ENGINEERING SEC.
PHONE:(919)707-6690
FAX:(919)250-4151

8/9/2018
NORTH CAROLINA PROFESSIONAL SEAL 10666 ENGINEER D. STEPHEN SCRUGGS
DocuSigned by: D. Stephen Scruggs
5C7A1DCE1D5E477...

UTILITY CONSTRUCTION

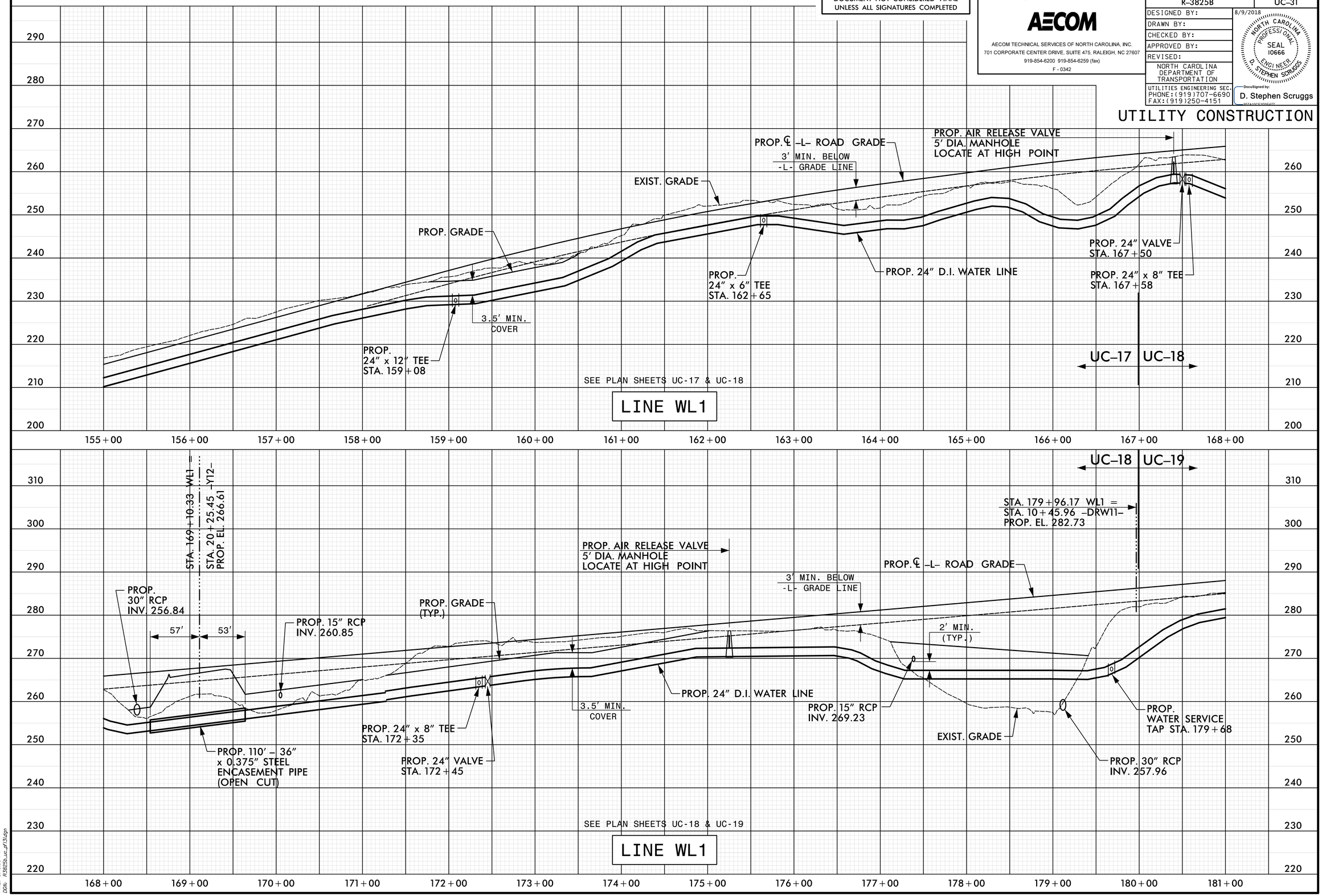

DATE: 8/9/2018
TIME: 5:43:00 PM
DGN: R3825b_uc_pf13.dgn

DocuSign Envelope ID: D256C046-CB62-4040-87CA-AF1FCEB81505

DOCUMENT NOT CONSIDERED FINAL UNLESS ALL SIGNATURES COMPLETED

Prepared In the Office of:
AECOM
AECOM TECHNICAL SERVICES OF NORTH CAROLINA, INC.
701 CORPORATE CENTER DRIVE, SUITE 475, RALEIGH, NC 27607
919-854-6200 919-854-6259 (fax)
F-0342

PROJECT REFERENCE NO.	SHEET NO.
R-3825B	UC-32

DESIGNED BY:
DRAWN BY:
CHECKED BY:
APPROVED BY:
REVISED:

NORTH CAROLINA DEPARTMENT OF TRANSPORTATION

UTILITIES ENGINEERING SECT.
PHONE:(919)707-6690
FAX:(919)250-4151

8/9/2018
NORTH CAROLINA PROFESSIONAL SEAL 10666 ENGINEER D. STEPHEN SCRUGGS
DocuSigned by: D. Stephen Scruggs
957A10CE3D5E477...

UTILITY CONSTRUCTION

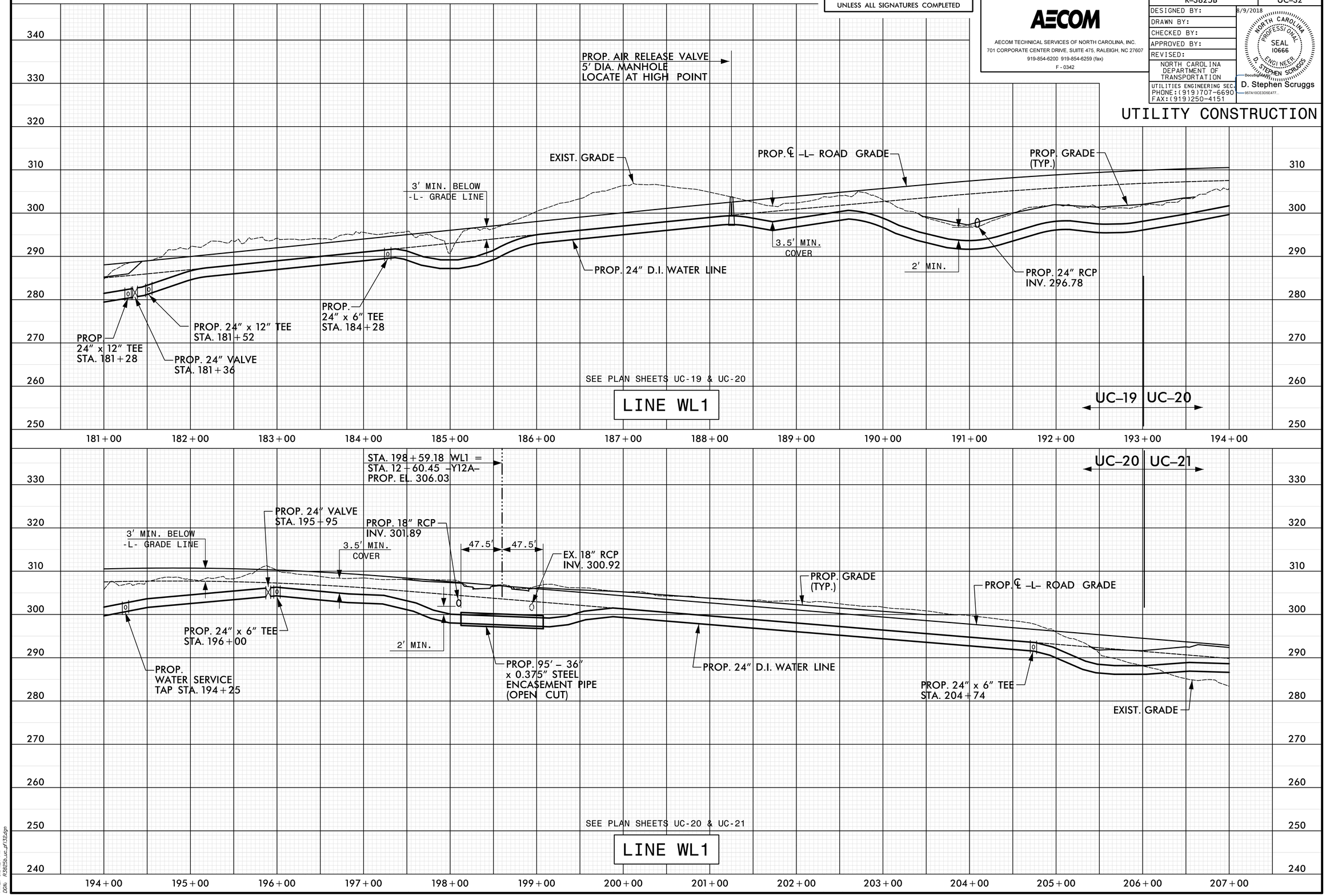

DATE: 8/9/2018
TIME: 3:54:24 PM
DGN: R3825b_uc_pf132.dgn

DocuSign Envelope ID: 012F15DE-0016-446C-A97E-4D45C1109D1A

DOCUMENT NOT CONSIDERED FINAL UNLESS ALL SIGNATURES COMPLETED

Prepared In the Office of:
AECOM
AECOM TECHNICAL SERVICES OF NORTH CAROLINA, INC.
701 CORPORATE CENTER DRIVE, SUITE 475, RALEIGH, NC 27607
919-854-6200 919-854-6259 (fax)
F-0342

PROJECT REFERENCE NO.	SHEET NO.
R-3825B	UC-33

DESIGNED BY:
DRAWN BY:
CHECKED BY:
APPROVED BY:
REVISED:

NORTH CAROLINA DEPARTMENT OF TRANSPORTATION

UTILITIES ENGINEERING SEC.
PHONE:(919)707-6690
FAX:(919)250-4151

8/9/2018
NORTH CAROLINA PROFESSIONAL SEAL 10666 ENGINEER D. STEPHEN SCRUGGS
DocuSigned by: D. Stephen Scruggs
5C7A1DCE3D5E477...

UTILITY CONSTRUCTION

The estimated quantity of vertical Ductile Iron Water Pipe Fittings on this plan sheet is 3065 pounds. The actual quantity and type of fittings will vary based on field conditions.

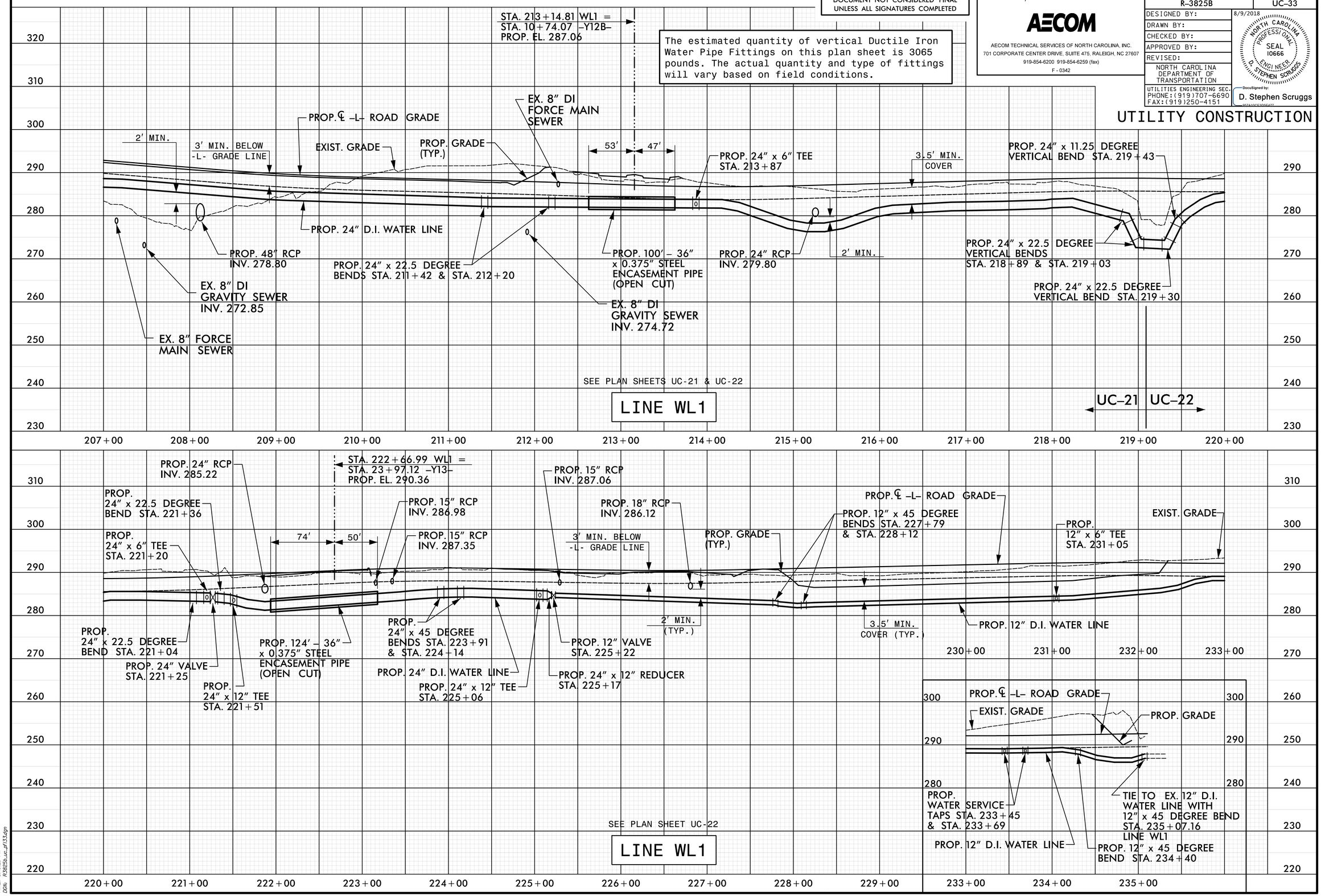

DATE: 8/9/2018
TIME: 5:43:20 PM
DGN: R3825b_uc_pf133.dgn

DocuSign Envelope ID: 012F15DE-0016-446C-A97E-4D45C1109D1A

DOCUMENT NOT CONSIDERED FINAL UNLESS ALL SIGNATURES COMPLETED

Prepared In the Office of:
AECOM
AECOM TECHNICAL SERVICES OF NORTH CAROLINA, INC.
701 CORPORATE CENTER DRIVE, SUITE 475, RALEIGH, NC 27607
919-854-6200 919-854-6259 (fax)
F - 0342

PROJECT REFERENCE NO.	SHEET NO.
R-3825B	UC-34
DESIGNED BY:	8/9/2018
DRAWN BY:	
CHECKED BY:	
APPROVED BY:	
REVISED:	
NORTH CAROLINA DEPARTMENT OF TRANSPORTATION	
UTILITIES ENGINEERING SEC. PHONE:(919)707-6690 FAX:(919)250-4151	DocuSigned by: D. Stephen Scruggs

NORTH CAROLINA PROFESSIONAL SEAL 10666 ENGINEER D. STEPHEN SCRUGGS

UTILITY CONSTRUCTION

The estimated quantity of vertical Ductile Iron Sewer Pipe Fittings on this plan sheet is 220 pounds. The actual quantity and type of fittings will vary based on field conditions.

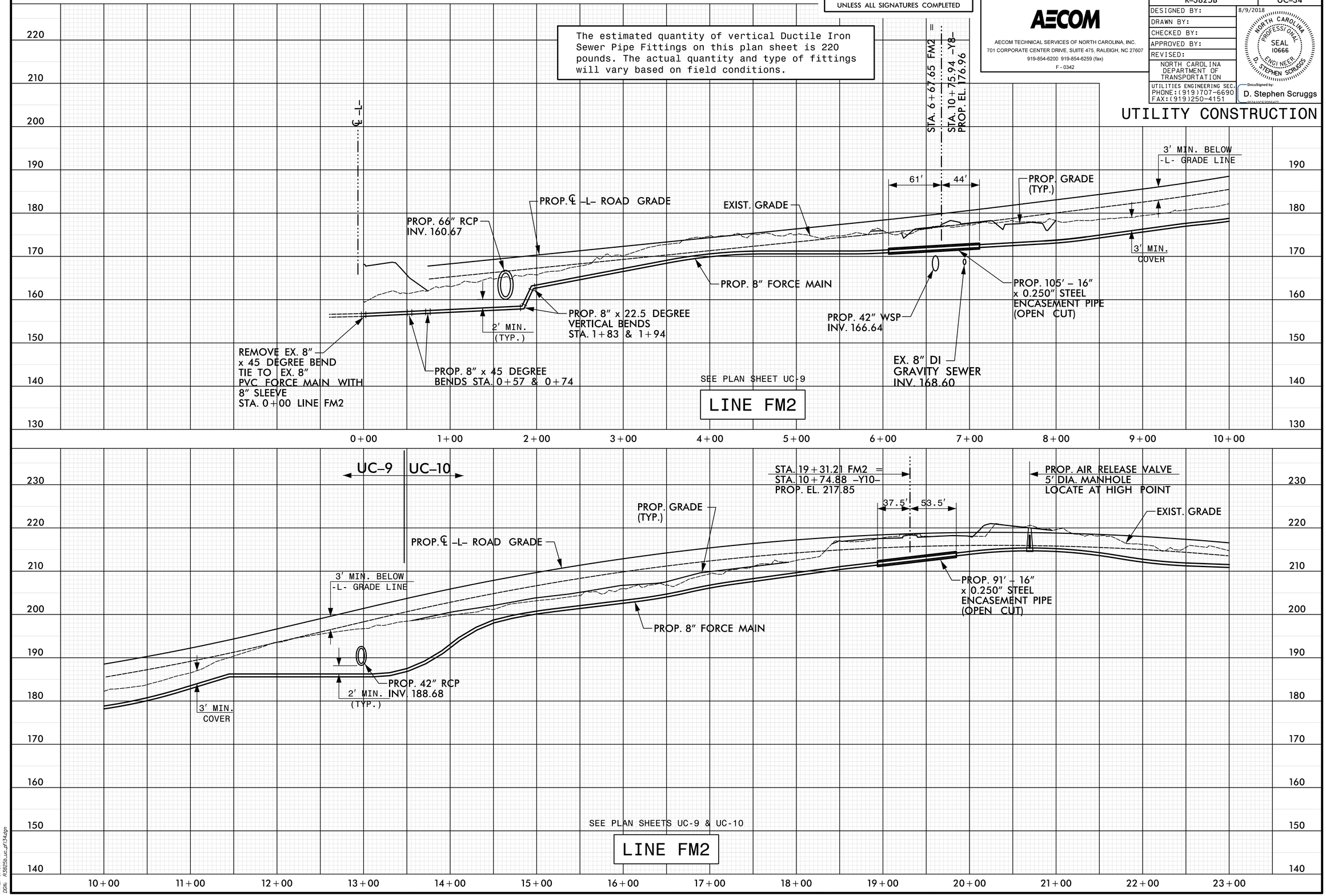

DATE: 8/9/2018
TIME: 5:43:41 PM
DGN: R3825b_uc_pf134.dgn

DocuSign Envelope ID: D256C046-CB62-4040-87CA-AF1FCEB81505

DOCUMENT NOT CONSIDERED FINAL UNLESS ALL SIGNATURES COMPLETED

The estimated quantity of vertical Ductile Iron Sewer Pipe Fittings on this plan sheet is 440 pounds. The actual quantity and type of fittings will vary based on field conditions.

Prepared In the Office of:
AECOM
AECOM TECHNICAL SERVICES OF NORTH CAROLINA, INC.
701 CORPORATE CENTER DRIVE, SUITE 475, RALEIGH, NC 27607
919-854-6200 919-854-6259 (fax)
F-0342

PROJECT REFERENCE NO.	SHEET NO.
R-3825B	UC-35
DESIGNED BY:	8/9/2018
DRAWN BY:	
CHECKED BY:	
APPROVED BY:	
REVISED:	
NORTH CAROLINA DEPARTMENT OF TRANSPORTATION	
UTILITIES ENGINEERING SECT. PHONE:(919)707-6690 FAX:(919)250-4151	D. Stephen Scruggs

NORTH CAROLINA PROFESSIONAL SEAL 10666 ENGINEER D. STEPHEN SCRUGGS

UTILITY CONSTRUCTION

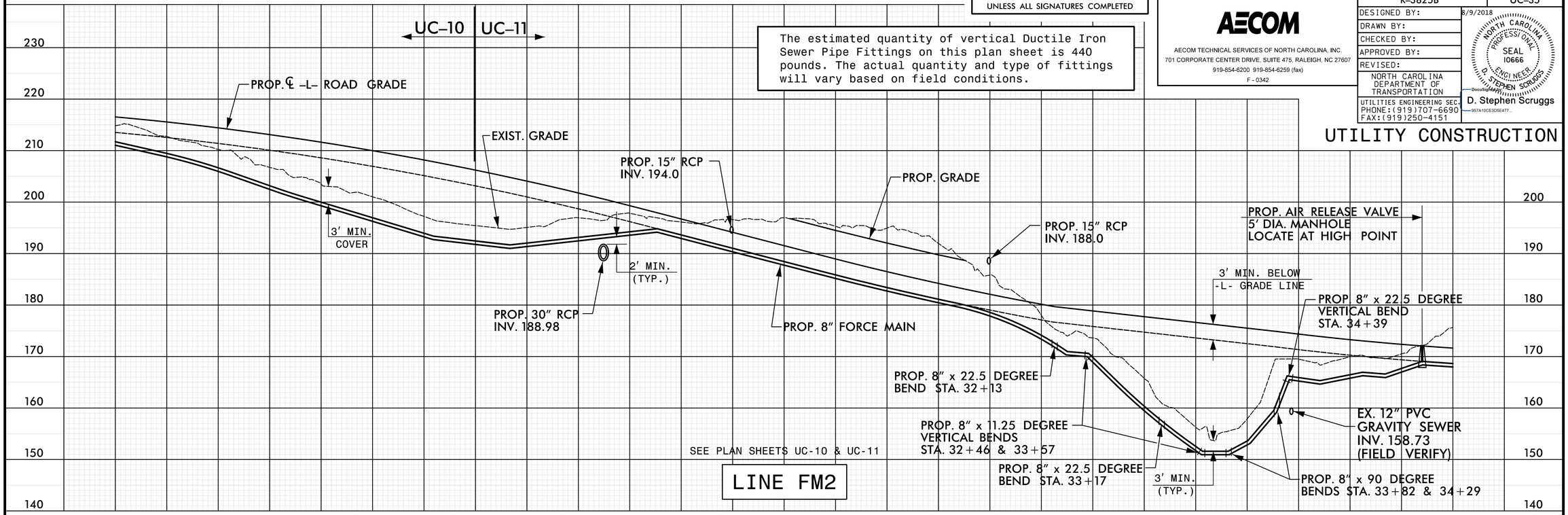

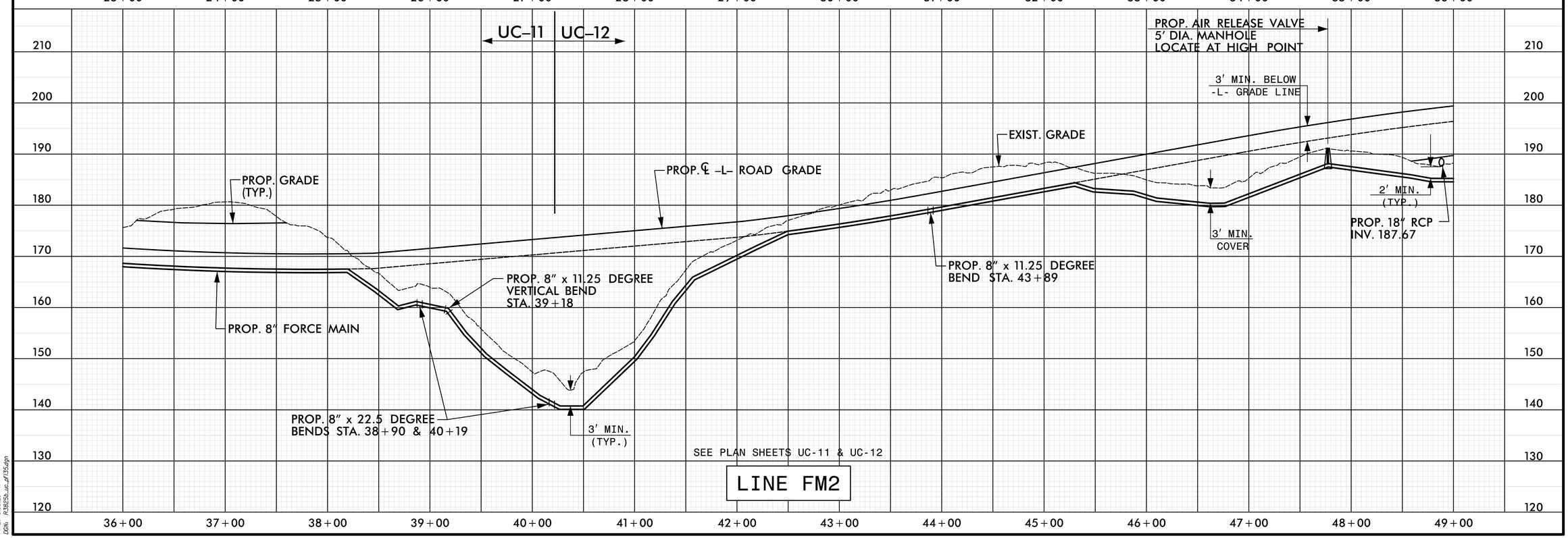

DATE: 8/9/2018
TIME: 3:55:26 PM
DGN: R3825b_uc_pf135.dgn

DocuSign Envelope ID: D256C046-CB62-4040-87CA-AF1FCEB81505

DOCUMENT NOT CONSIDERED FINAL UNLESS ALL SIGNATURES COMPLETED

Prepared In the Office of:
AECOM
AECOM TECHNICAL SERVICES OF NORTH CAROLINA, INC.
701 CORPORATE CENTER DRIVE, SUITE 475, RALEIGH, NC 27607
919-854-6200 919-854-6259 (fax)
F-0342

PROJECT REFERENCE NO.	SHEET NO.
R-3825B	UC-36
DESIGNED BY:	8/9/2018
DRAWN BY:	
CHECKED BY:	
APPROVED BY:	
REVISED:	
NORTH CAROLINA DEPARTMENT OF TRANSPORTATION	
UTILITIES ENGINEERING SECT. PHONE:(919)707-6690 FAX:(919)250-4151	D. Stephen Scruggs

NORTH CAROLINA PROFESSIONAL SEAL 10666 ENGINEER D. STEPHEN SCRUGGS

DocuSigned by: 957A10CE3D5E477...

UTILITY CONSTRUCTION

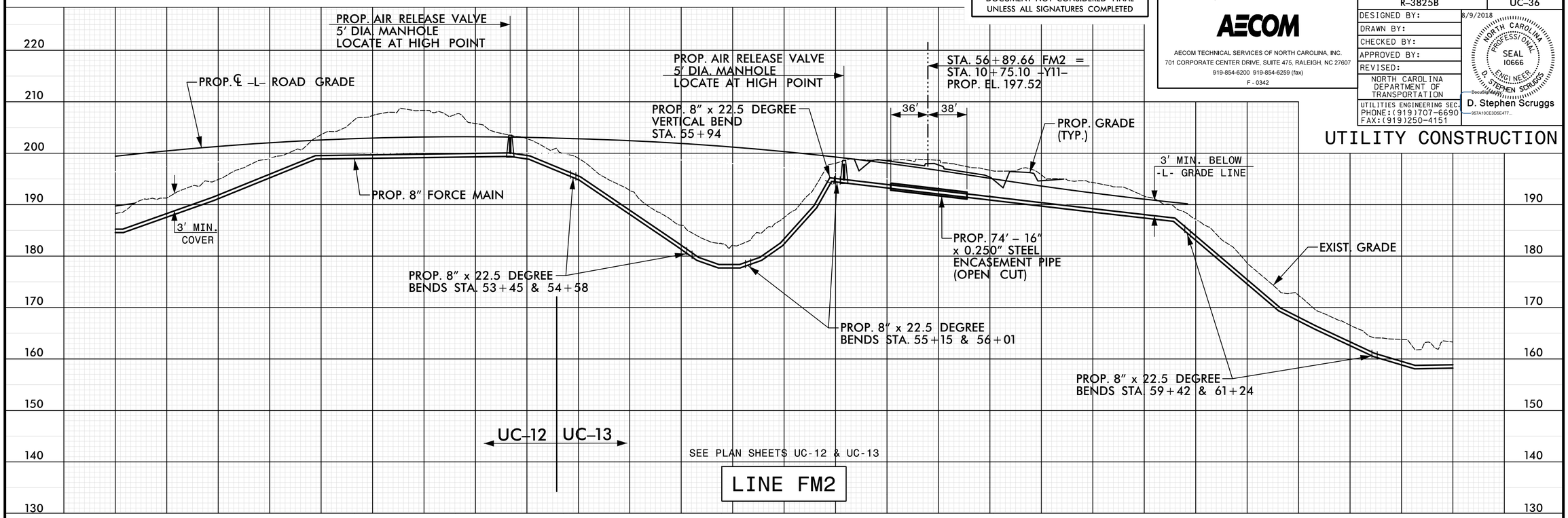

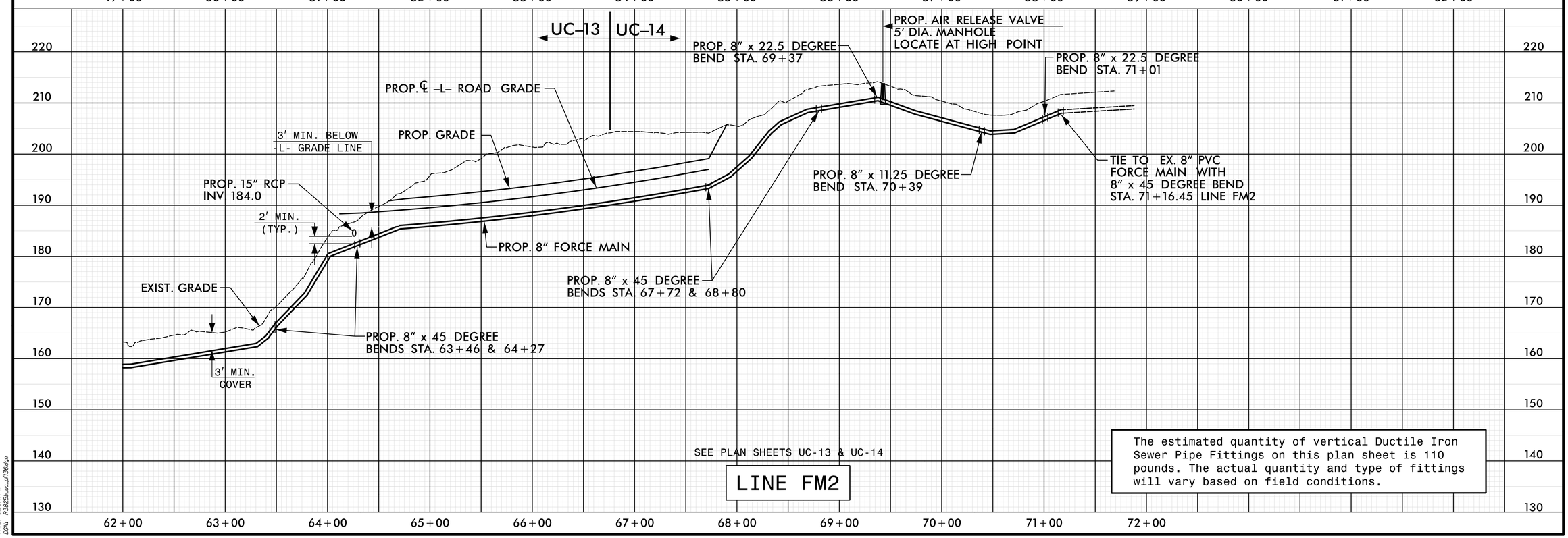

The estimated quantity of vertical Ductile Iron Sewer Pipe Fittings on this plan sheet is 110 pounds. The actual quantity and type of fittings will vary based on field conditions.

DATE: 8/9/2018
TIME: 3:55:41 PM
DGN: R3825b_uc_pf135.dgn

DocuSign Envelope ID: D256C046-CB62-4040-87CA-AF1FCEB81505

DOCUMENT NOT CONSIDERED FINAL UNLESS ALL SIGNATURES COMPLETED

Prepared In the Office of:

AECOM

AECOM TECHNICAL SERVICES OF NORTH CAROLINA, INC.
701 CORPORATE CENTER DRIVE, SUITE 475, RALEIGH, NC 27607
919-854-6200 919-854-6259 (fax)
F - 0342

PROJECT REFERENCE NO.	SHEET NO.
R-3825B	UC-37

DESIGNED BY:
DRAWN BY:
CHECKED BY:
APPROVED BY:
REVISED:

NORTH CAROLINA DEPARTMENT OF TRANSPORTATION

UTILITIES ENGINEERING SECT.
PHONE:(919)707-6690
FAX:(919)250-4151

8/9/2018

NORTH CAROLINA PROFESSIONAL SEAL 10666 ENGINEER D. STEPHEN SCRUGGS

DocuSigned by:
D. Stephen Scruggs
957A10CE3D5E477...

UTILITY CONSTRUCTION

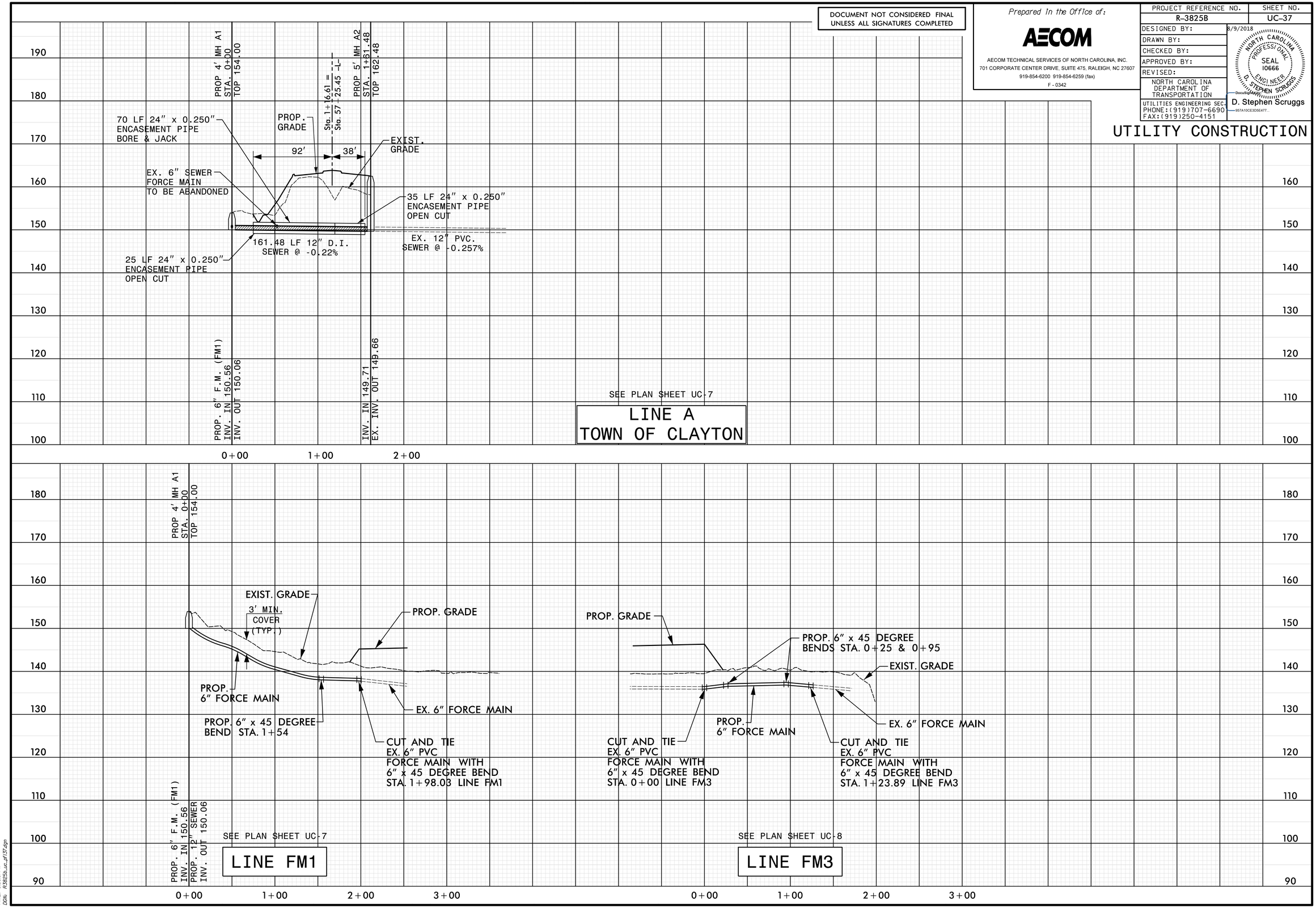

DATE: 8/9/2018
TIME: 3:56:01 PM
DGN: R3825b_uc_pf13T.dgn

DocuSign Envelope ID: 9C6847AE-1D6C-4FA7-985E-752A58AAE148

09/08/99

TIP PROJECT: R-3825B

See Sheet 1A For Index of Sheets
See Sheet 1B For Conventional Symbols

T.I.P. NO.	SHEET NO.
R-3825B	UC-1Q

STATE OF NORTH CAROLINA
DIVISION OF HIGHWAYS

UTILITY CONSTRUCTION PLANS
JOHNSTON COUNTY

LOCATION: NC 42 FROM SR 1902 (GLENN LAUREL RD) TO SR 1003 (BUFFALO RD)

TYPE OF WORK: WATER AND SEWER LINE RELOCATION

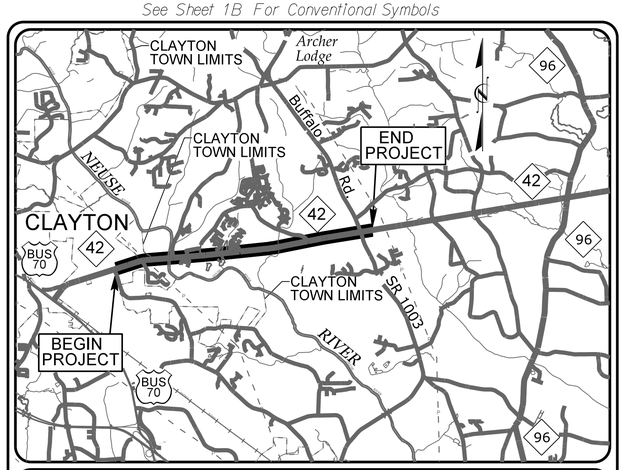

VICINITY MAP
NOT TO SCALE

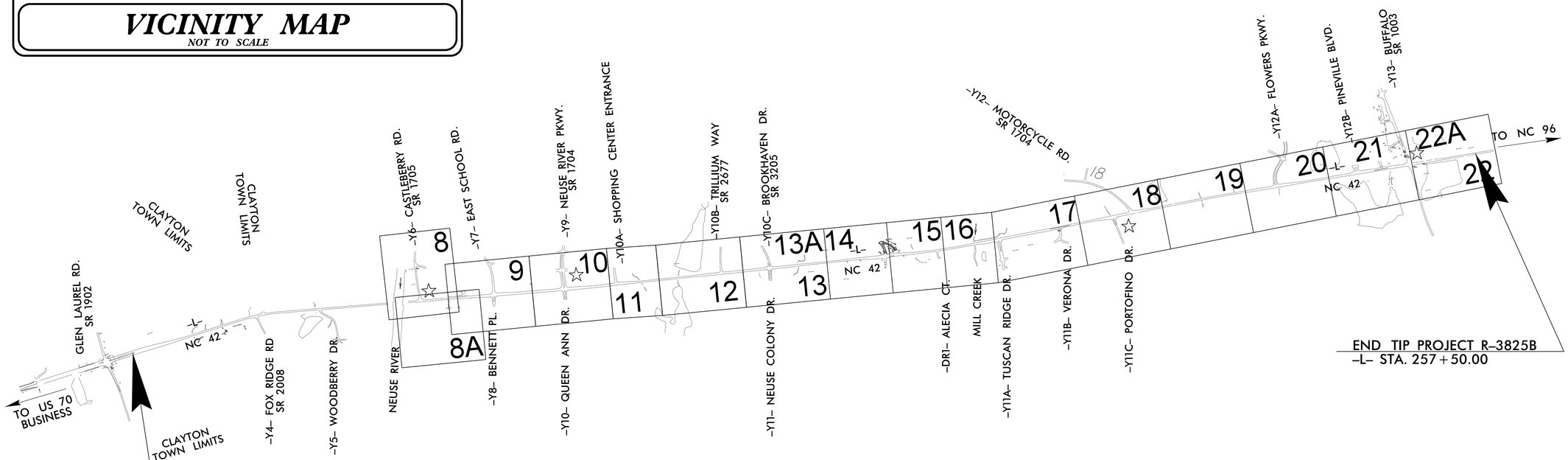

A PORTION OF THIS PROJECT IS WITHIN THE MUNICIPAL BOUNDARIES OF THE TOWN OF CLAYTON

THERE IS NO CONTROL OF ACCESS ON THIS PROJECT EXCEPT AS SHOWN ON PLANS

A DESIGN EXCEPTION IS REQUIRED FOR MAXIMUM GRADE.

CLEARING ON THIS PROJECT WILL BE PERFORMED TO THE LIMITS ESTABLISHED BY NCDOT METHOD III.

GRAPHIC SCALES

50 25 0 50 100
PLANS

50 25 0 50 100
PROFILE (HORIZONTAL)

10 5 0 10 20
PROFILE (VERTICAL)

INDEX OF SHEETS

SHEET NO.:	DESCRIPTION:
UC-1Q	TITLE SHEET
UC-2Q	UTILITY SYMBOLOGY
UC-3Q	NOTES
UC-3A THRU UC-3DQ	DETAILS
UC-8Q THRU UC-22Q	UTILITY CONSTRUCTION SHEETS AND PROFILES

WATER AND SEWER OWNERS ON PROJECT

(A) WATER AQUA NC
(B) SANITARY SEWER AQUA NC

PREPARED IN THE OFFICE OF

Dewberry

CONSULTANT INFO
2610 WYCLIFF ROAD, SUITE 410
RALEIGH, NC 27607
919.881.9939
NCBELS: NO. F-0929

LARRY MITCHELL, P.E.	CONSULTANT CONTACT #1
TIMOTHY RITTACO, P.E.	CONSULTANT CONTACT #2
DUSTIN JAMES	CONSULTANT CONTACT #3

SEAL

8/9/2018

DIVISION OF HIGHWAYS
UTILITIES UNIT
1555 MAIL SERVICES CENTER
RALEIGH NC 27699-1555
PHONE (919) 707-6690
FAX (919) 250-4151

NABIL HAMDAN	UTILITIES REGIONAL ENGINEER
ASHLEY B. COX, JR, LG	UTILITIES ENGINEER
KYLE PLEASANT	UTILITIES AREA COORDINATOR
DAYTON MARTIN	UTILITIES COORDINATOR

$$$$SYSTIME$$$$
$$$$$$$$$$$$$$$$DGN$$$$$$$$$$$$$$$$
$$$$USERNAME$$$$

PROJECT REFERENCE NO.	SHEET NO.
R-3825B	UC-2Q

STATE OF NORTH CAROLINA, DIVISION OF HIGHWAYS

CONVENTIONAL PLAN SHEET SYMBOLS

Note: Not to Scale **S.U.E. = Subsurface Utility Engineering*

BOUNDARIES AND PROPERTY:

- State Line
- County Line
- Township Line
- City Line
- Reservation Line
- Property Line
- Existing Iron Pin — EIP
- Property Corner
- Property Monument — ECM
- Parcel/Sequence Number — 123
- Existing Fence Line
- Proposed Woven Wire Fence
- Proposed Chain Link Fence
- Proposed Barbed Wire Fence
- Existing Wetland Boundary — WLB
- Proposed Wetland Boundary — WLB
- Existing Endangered Animal Boundary — EAB
- Existing Endangered Plant Boundary — EPB
- Existing Historic Property Boundary — HPB
- Known Contamination Area: Soil
- Potential Contamination Area: Soil
- Known Contamination Area: Water
- Potential Contamination Area: Water
- Contaminated Site: Known or Potential

BUILDINGS AND OTHER CULTURE:

- Gas Pump Vent or U/G Tank Cap
- Sign — S
- Well — W
- Small Mine
- Foundation
- Area Outline
- Cemetery
- Building
- School
- Church
- Dam

HYDROLOGY:

- Stream or Body of Water
- Hydro, Pool or Reservoir
- Jurisdictional Stream — JS
- Buffer Zone 1 — BZ 1
- Buffer Zone 2 — BZ 2
- Flow Arrow
- Disappearing Stream
- Spring
- Wetland
- Proposed Lateral, Tail, Head Ditch — FLOW
- False Sump

RAILROADS:

- Standard Gauge — CSX TRANSPORTATION
- RR Signal Milepost — MILEPOST 35
- Switch — SWITCH
- RR Abandoned
- RR Dismantled

RIGHT OF WAY:

- Baseline Control Point
- Existing Right of Way Marker
- Existing Right of Way Line
- Proposed Right of Way Line — RW
- Proposed Right of Way Line with Iron Pin and Cap Marker — RW
- Proposed Right of Way Line with Concrete or Granite R/W Marker — RW
- Proposed Control of Access Line with Concrete C/A Marker — CA
- Existing Control of Access — CA
- Proposed Control of Access — CA
- Existing Easement Line — E
- Proposed Temporary Construction Easement — E
- Proposed Temporary Drainage Easement — TDE
- Proposed Permanent Drainage Easement — PDE
- Proposed Permanent Drainage / Utility Easement — DUE
- Proposed Permanent Utility Easement — PUE
- Proposed Temporary Utility Easement — TUE
- Proposed Aerial Utility Easement — AUE
- Proposed Permanent Easement with Iron Pin and Cap Marker

ROADS AND RELATED FEATURES:

- Existing Edge of Pavement
- Existing Curb
- Proposed Slope Stakes Cut — C
- Proposed Slope Stakes Fill — F
- Proposed Curb Ramp — CR
- Existing Metal Guardrail
- Proposed Guardrail
- Existing Cable Guiderail
- Proposed Cable Guiderail
- Equality Symbol
- Pavement Removal

VEGETATION:

- Single Tree
- Single Shrub
- Hedge
- Woods Line
- Orchard
- Vineyard — Vineyard

EXISTING STRUCTURES:

MAJOR:

- Bridge, Tunnel or Box Culvert — CONC
- Bridge Wing Wall, Head Wall and End Wall — CONC WW

MINOR:

- Head and End Wall — CONC HW
- Pipe Culvert
- Footbridge
- Drainage Box: Catch Basin, DI or JB — CB
- Paved Ditch Gutter
- Storm Sewer Manhole — S
- Storm Sewer — S

UTILITIES:

POWER:

- Existing Power Pole
- Proposed Power Pole
- Existing Joint Use Pole
- Proposed Joint Use Pole
- Power Manhole — P
- Power Line Tower
- Power Transformer
- U/G Power Cable Hand Hole
- H-Frame Pole
- U/G Power Line LOS B (S.U.E.*) — P
- U/G Power Line LOS C (S.U.E.*) — P
- U/G Power Line LOS D (S.U.E.*) — P

TELEPHONE:

- Existing Telephone Pole
- Proposed Telephone Pole
- Telephone Manhole — T
- Telephone Pedestal — T
- Telephone Cell Tower
- U/G Telephone Cable Hand Hole — HH
- U/G Telephone Cable LOS B (S.U.E.*) — T
- U/G Telephone Cable LOS C (S.U.E.*) — T
- U/G Telephone Cable LOS D (S.U.E.*) — T
- U/G Telephone Conduit LOS B (S.U.E.*) — TC
- U/G Telephone Conduit LOS C (S.U.E.*) — TC
- U/G Telephone Conduit LOS D (S.U.E.*) — TC
- U/G Fiber Optics Cable LOS B (S.U.E.*) — T FO
- U/G Fiber Optics Cable LOS C (S.U.E.*) — T FO
- U/G Fiber Optics Cable LOS D (S.U.E.*) — T FO

WATER:

- Water Manhole — W
- Water Meter
- Water Valve
- Water Hydrant
- U/G Water Line LOS B (S.U.E*) — W
- U/G Water Line LOS C (S.U.E*) — W
- U/G Water Line LOS D (S.U.E*) — W
- Above Ground Water Line — A/G Water

TV:

- TV Pedestal — C
- TV Tower
- U/G TV Cable Hand Hole — HH
- U/G TV Cable LOS B (S.U.E.*) — TV
- U/G TV Cable LOS C (S.U.E.*) — TV
- U/G TV Cable LOS D (S.U.E.*) — TV
- U/G Fiber Optic Cable LOS B (S.U.E.*) — TV FO
- U/G Fiber Optic Cable LOS C (S.U.E.*) — TV FO
- U/G Fiber Optic Cable LOS D (S.U.E.*) — TV FO

GAS:

- Gas Valve
- Gas Meter
- U/G Gas Line LOS B (S.U.E.*) — G
- U/G Gas Line LOS C (S.U.E.*) — G
- U/G Gas Line LOS D (S.U.E.*) — G
- Above Ground Gas Line — A/G Gas

SANITARY SEWER:

- Sanitary Sewer Manhole
- Sanitary Sewer Cleanout
- U/G Sanitary Sewer Line — SS
- Above Ground Sanitary Sewer — A/G Sanitary Sewer
- SS Forced Main Line LOS B (S.U.E.*) — FSS
- SS Forced Main Line LOS C (S.U.E.*) — FSS
- SS Forced Main Line LOS D (S.U.E.*) — FSS

MISCELLANEOUS:

- Utility Pole
- Utility Pole with Base
- Utility Located Object
- Utility Traffic Signal Box — S
- Utility Unknown U/G Line LOS B (S.U.E.*) — ?UTL
- U/G Tank; Water, Gas, Oil
- Underground Storage Tank, Approx. Loc. — UST
- A/G Tank; Water, Gas, Oil
- Geoenvironmental Boring
- U/G Test Hole LOS A (S.U.E.*)
- Abandoned According to Utility Records — AATUR
- End of Information — E.O.I.

DocuSign Envelope ID: EE8483D8-71C0-4012-A9E0-E4BEF7462007

5/14/99

PROJECT REFERENCE NO.	SHEET NO.
R-3825B	UC-3Q
DESIGNED BY:	
DRAWN BY:	
CHECKED BY:	
APPROVED BY:	
REVISED:	
NORTH CAROLINA DEPARTMENT OF TRANSPORTATION	
UTILITIES ENGINEERING SEC. PHONE:(919)707-6690 FAX:(919)250-4151	UTILITY CONSTRUCTION PLANS ONLY

NORTH CAROLINA PROFESSIONAL SEAL 036000 ENGINEER TIMOTHY J. RITACCO
DocuSign Envelope ID: Timothy J. Ritacco
8/9/2018

UTILITY CONSTRUCTION

UTILITY CONSTRUCTION

GENERAL NOTES:

1. THE PROPOSED UTILITY CONSTRUCTION SHALL MEET THE APPLICABLE REQUIREMENTS OF THE NC DEPARTMENT OF TRANSPORTATION'S "STANDARD SPECIFICATIONS FOR ROADS AND STRUCTURES" DATED JANUARY 2012.

2. THE EXISTING UTILITIES BELONG TO AQUA NC, CONTACT PERSON IS MICHAEL MELTON (704) 483-8126.

3. ALL WATER LINES TO BE INSTALLED WITHIN COMPLIANCE OF THE RULES AND REGULATIONS OF THE NORTH CAROLINA DEPARTMENT OF ENVIRONMENTAL QUALITY, DIVISION OF WATER RESOURCES, PUBLIC WATER SUPPLY SECTION. ALL SEWER LINES TO BE INSTALLED WITHIN COMPLIANCE OF THE RULES AND REGULATIONS OF THE NORTH CAROLINA DEPARTMENT OF ENVIRONMENT QUALITY, DIVISION OF WATER RESOURCES, WATER QUALITY SECTION. PERFORM ALL WORK IN ACCORDANCE WITH THE APPLICABLE PLUMBING CODES.

4. THE UTILITY OWNER OWNS THE EXISTING UTILITY FACILITIES AND WILL OWN THE NEW UTILITY FACILITIES AFTER ACCEPTANCE BY THE DEPARTMENT. THE DEPARTMENT OWNS THE CONSTRUCTION CONTRACT AND HAS ADMINISTRATIVE AUTHORITY. COMMUNICATIONS AND DECISIONS BETWEEN THE CONTRACTOR AND UTILITY OWNER ARE NOT BINDING UPON THE DEPARTMENT OR THIS CONTRACT UNLESS AUTHORIZED BY THE ENGINEER. AGREEMENTS BETWEEN THE UTILITY OWNER AND CONTRACTOR FOR THE WORK THAT IS NOT PART OF THIS CONTRACT OR IS SECONDARY TO THIS CONTRACT ARE ALLOWED, BUT ARE NOT BINDING UPON THE DEPARTMENT.

5. PROVIDE ACCESS FOR THE DEPARTMENT PERSONNEL AND THE OWNER'S REPRESENTATIVES TO ALL PHASES OF CONSTRUCTION. NOTIFY DEPARTMENT PERSONNEL AND THE UTILITY OWNER TWO WEEKS PRIOR TO COMMENCEMENT OF ANY WORK AND ONE WEEK PRIOR TO SERVICE INTERRUPTION. KEEP UTILITY OWNERS' REPRESENTATIVES INFORMED OF WORK PROGRESS AND PROVIDE OPPORTUNITY FOR INSPECTION OF CONSTRUCTION AND TESTING.

6. THE PLANS DEPICT THE BEST AVAILABLE INFORMATION FOR THE LOCATION, SIZE, AND TYPE OF MATERIAL FOR ALL EXISTING UTILITIES. MAKE INVESTIGATIONS FOR DETERMINING THE EXACT LOCATION, SIZE, AND TYPE MATERIAL OF THE EXISTING FACILITIES AS NECESSARY FOR THE CONSTRUCTION OF THE PROPOSED UTILITIES AND FOR AVOIDING DAMAGE TO EXISTING FACILITIES. REPAIR ANY DAMAGE INCURRED TO EXISTING FACILITIES TO THE ORIGINAL OR BETTER CONDITION AT NO ADDITIONAL COST TO THE DEPARTMENT.

7. MAKE FINAL CONNECTIONS OF THE NEW WORK TO THE EXISTING SYSTEM WHERE INDICATED ON THE PLANS, AS REQUIRED TO FIT THE ACTUAL CONDITIONS, OR AS DIRECTED.

8. MAKE CONNECTIONS BETWEEN EXISTING AND PROPOSED UTILITIES AT TIMES MOST CONVENIENT TO THE PUBLIC, WITHOUT ENDANGERING THE UTILITY SERVICE, AND IN ACCORDANCE WITH THE UTILITY OWNER'S REQUIREMENTS. MAKE CONNECTIONS ON WEEKENDS, AT NIGHT, AND ON HOLIDAYS IF NECESSARY.

9. ALL UTILITY MATERIALS SHALL BE APPROVED PRIOR TO DELIVERY TO THE PROJECT. SEE 1500-7, " SUBMITTALS AND RECORDS" IN SECTION 1500 OF THE STANDARD SPECIFICATIONS.

PROJECT SPECIFIC NOTES:

1. CONTRACTOR'S ATTENTION IS DIRECTED TO SECTIONS 102, 107, AND 1550 OF THE STANDARD SPECIFICATIONS CONCERNING TRENCHLESS INSTALLATION. IT IS CONTRACTOR'S RESPONSIBILITY TO HAVE BORE DESIGNED AND SEALED BY A LICENSED NORTH CAROLINA PROFESSIONAL ENGINEER. NO DAMAGE IS ALLOWED TO RIVER, WETLANDS, OR BUFFER ZONES.

2. IF HDPE PIPE IS INSTALLED BY DIRECTIONAL DRILL. IT SHALL BE FILLED WITH WATER AND NOT BE CONNECTED TO ANY OTHER PIPE OR FITTINGS FOR ONE WEEK FROM THE TIME OF INSTALLATION.

LIST OF STANDARD DRAWINGS

1515.01	WATER METER
1515.02	FIRE HYDRANT
1520.01	SEWER CLEAN OUT
1525.06	PRECAST CONCRETE SANITARY SEWER MANHOLE WITH CAST-IN-PLACE BOTTOM

$$$$SYSTIME$$$$
$$$$DGN$$$$

DocuSign Envelope ID: 14A7506D-33AA-4FAD-8A62-29CEF2A353C6

5/14/99

PROJECT TYPICAL DETAILS

Dewberry
2609 WYNDHAM PARKWAY
SUITE 410
RALEIGH, NC 27607
PHONE: 919.881.9939
NC COA No. F-0929

PROJECT REFERENCE NO.	SHEET NO.
R-3825B	UC-3AQ
DESIGNED BY:	
DRAWN BY:	
CHECKED BY:	
APPROVED BY:	
REVISED:	
NORTH CAROLINA DEPARTMENT OF TRANSPORTATION	8/9/2018
UTILITIES ENGINEERING SEC PHONE:(919)707-6690 FAX:(919)250-4151	UTILITY CONSTRUCTION PLANS ONLY

NORTH CAROLINA PROFESSIONAL ENGINEER SEAL 045600 TIMOTHY J. RITACCO
DocuSign Envelope ID: 2C2B2D9B3C4FB...
Timothy J. Ritacco

UTILITY CONSTRUCTION

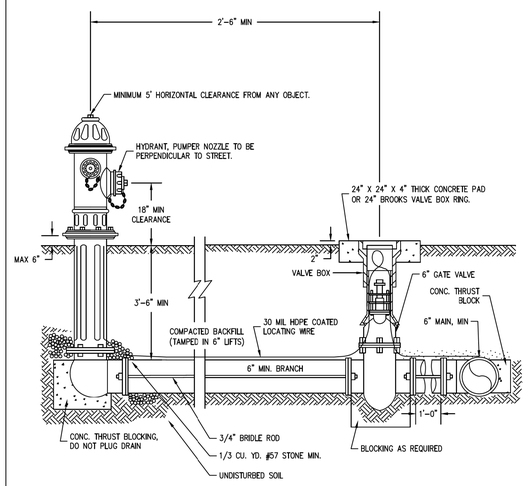

NOTES:

1. ALL HYDRANTS SHALL BE CONSTRUCTED IN ACCORDANCE WITH AWWA STANDARD C503-82.
2. HYDRANTS WILL BE INSTALLED IN TRUE VERTICAL POSITIONS.
3. ALL BENDS, TEES, VALVES AND BLOW-OFFS SHALL BE BLOCKED IN ACCORDANCE WITH AWWA STANDARDS.
4. HYDRANTS SHALL HAVE NATIONAL STANDARD THREADS.

DRAWING NO. 11	HYDRANT DETAIL	AQUA Aqua North Carolina, Inc.
REVISION DATE 01/2017		

WATER

TRENCH DETAIL

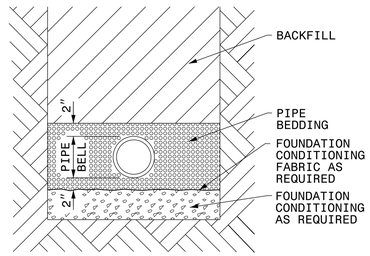

PLACE FOUNDATION CONDITIONING MATERIAL BELOW BEDDING IF REQUIRED, AS DIRECTED BY ENGINEER. PIPE BEDDED IN SELECT MATERIAL, CLASS II (TYPE 1) OR CLASS III. TRENCH BACKFILLED IN LOOSE 6" LAYERS COMPACTED TO TOP OF TRENCH USING LOCAL EXCAVATED MATERIAL IF APPROVED BY THE ENGINEER, OR SELECT MATERIAL. ALL MATERIAL SHALL BE FREE OF ROCKS, FOREIGN MATERIAL, AND FROZEN EARTH. COMPACTION SHALL BE TO APPROXIMATELY 95% DENSITY IN ACCORDANCE WITH AASHTO T-99 AS MODIFIED BY THE DEPARTMENT OF TRANSPORTATION.

WATER & SERWER

CLASS "C"

(BEDDING FOR P.V.C. PIPE)

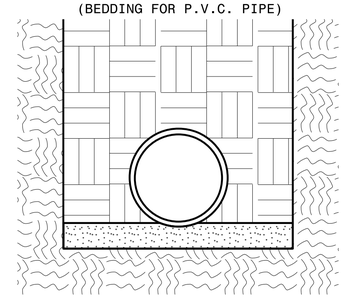

PIPE BEDDED IN LOOSE MATERIAL, LIGHTLY TAMPED WITH A MINIMUM OF 6" UNDER PIPE. TRENCH BACKFILLED IN LOOSE 6" LAYERS COMPACTED TO TOP OF TRENCH USING LOCAL EXCAVATED MATERIAL, IF APPROVED BY THE ENGINEER, OR SELECT MATERIAL. ALL MATERIAL SHALL BE FREE OF ROCKS, FOREIGN MATERIAL, AND FROZEN EARTH. COMPACTION SHALL BE TO APPROX. 95% DENSITY IN ACCORDANCE WITH AASHTO T-99 AS MODIFIED BY THE DEPARTMENT OF TRANSPORTATION.

WATER & SEWER

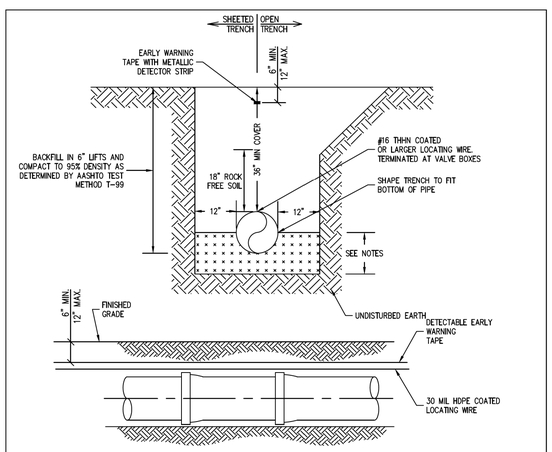

NOTES:

1. WHERE ROCK OR NON-CUSHIONING MATERIAL IS ENCOUNTERED IN TRENCH, USE #5 STONE FOR A DEPTH OF 8" UNDER PIPE.
2. WHERE UNSUITABLE SOIL OR MUCK IS ENCOUNTERED, EXCAVATE THE SOIL AND BACKFILL WITH #5 STONE TO FORM A PIPE BED.
3. PVC AND DUCTILE IRON MAINS SHALL MEET ALL STANDARDS AS CALLED OUT IN THE SPECIFICATIONS (DIVISION 5, SECTION 1.3.3).
4. ALL WATER MAINS SHALL HAVE A DETECTABLE "EARLY WARNING" PROTECTION TAPE AND HDPE LOCATING WIRE INSTALLED CONTINUOUSLY ALONG THE ALIGNMENT. THE PROTECTION TAPE AND WIRE SHALL BE INSTALLED DURING BACKFILLED 6"-12" INCHES BELOW FINISHED GRADE DIRECTLY OVER THE PIPE AND BE CONTINUOUSLY MARKED" CAUTION, WATER MAIN BURIED BELOW." THE TAPE SHALL HAVE A METALLIC DETECTABLE STRIP INCLUDED AND BE GREEN IN COLOR. ALL PROTECTION TAPE SHALL BE AS TERRA-TAPE OR EQUAL.
5. ALL P.V.C. WATER MAINS SHALL BE EITHER A SOLID BLUE COLOR OR WHITE BLUE LETTERING. ALL LETTERING SHALL APPEAR ON THREE SIDES OF THE PIPE AND SHALL RUN THE ENTIRE LENGTH OF THE PIPE AND SHALL BE A MINIMUM 3/4 INCH IN HEIGHT WITH THE APPROPRIATE WORDING APPEARING ONE OR MORE TIMES EVERY 21 INCHES ALONG THE LENGTH OF THE PIPE. THE LETTERING MUST BE PERMANENTLY STENCILED TO THE PIPE SURFACE. LETTERING SHALL READ AS IS ACCEPTABLE FOR THE INTENDED USE. ALL LETTERING SHALL BE APPLIED BY THE PIPE MANUFACTURER DURING PRODUCTION.
6. ALL DUCTILE IRON WATER MAINS SHALL BE MARKED WITH A CONTINUOUS STRIPE LOCATED WITHIN THE 90° OF THE PIPE. SAID STRIPE SHALL BE A MINIMUM 2-INCHES IN WIDTH AND SHALL BE BLUE IN COLOR. BACKFILL SHALL NOT BE PLACED FOR 30 MINUTES FOLLOWING PAINT APPLICATION.
7. ALL P.V.C. PIPE SHALL BEAR THE NATIONAL SANITATION FOUNDATION (NSF) SEAL OF APPROVAL FOR POTABLE WATER PIPE.

DRAWING NO. 14	TRENCH DETAIL	AQUA Aqua North Carolina, Inc.
REVISION DATE 01/2017		

WATER

654.01

ENGLISH STANDARD DRAWING FOR
PAVEMENT REPAIRS
FOR SUPERPAVE MIX TYPES

1-12 STATE OF NORTH CAROLINA DEPT. OF TRANSPORTATION DIVISION OF HIGHWAYS RALEIGH, N.C.

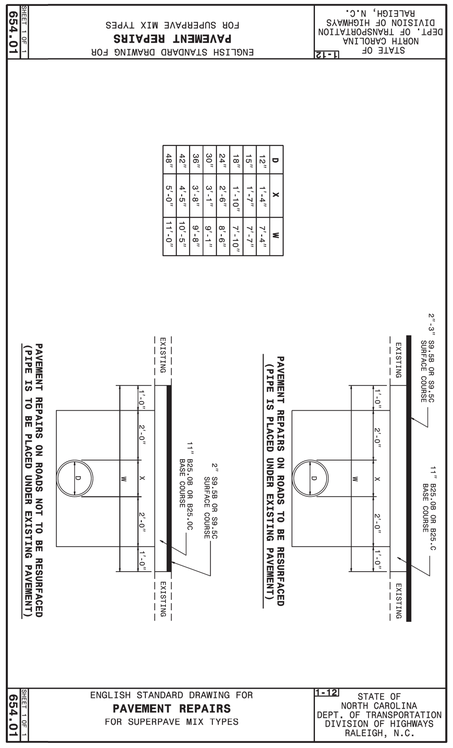

D	X	W
12"	1'-3"	2'-4"
15"	1'-4"	2'-4"
18"	1'-10"	2'-4"
24"	2'-6"	2'-6"
30"	3'-1"	2'-8"
36"	3'-6"	2'-8"
42"	4'-5"	10'-5"
48"	5'-0"	11'-0"

654.01

STATE OF NORTH CAROLINA DEPT. OF TRANSPORTATION DIVISION OF HIGHWAYS RALEIGH, N.C.

1-12

WATER & SEWER

$$$$SYSTIME$$$$
$$$$DGN$$$$

DocuSign Envelope ID: 16B773D8-EF61-451F-8B83-50FF9B674B08

PROJECT TYPICAL DETAILS

Dewberry

PROJECT REFERENCE NO.	SHEET NO.
R-3825B	UC-3BQ

DESIGNED BY:
DRAWN BY:
CHECKED BY:
APPROVED BY:
REVISED:

NORTH CAROLINA DEPARTMENT OF TRANSPORTATION

UTILITIES ENGINEERING SEC.
PHONE: (919)707-6690
FAX: (919)250-4151

NORTH CAROLINA PROFESSIONAL ENGINEER SEAL 046000 — TIMOTHY J. RITACCO — 8/9/2018

UTILITY CONSTRUCTION PLANS ONLY

UTILITY CONSTRUCTION

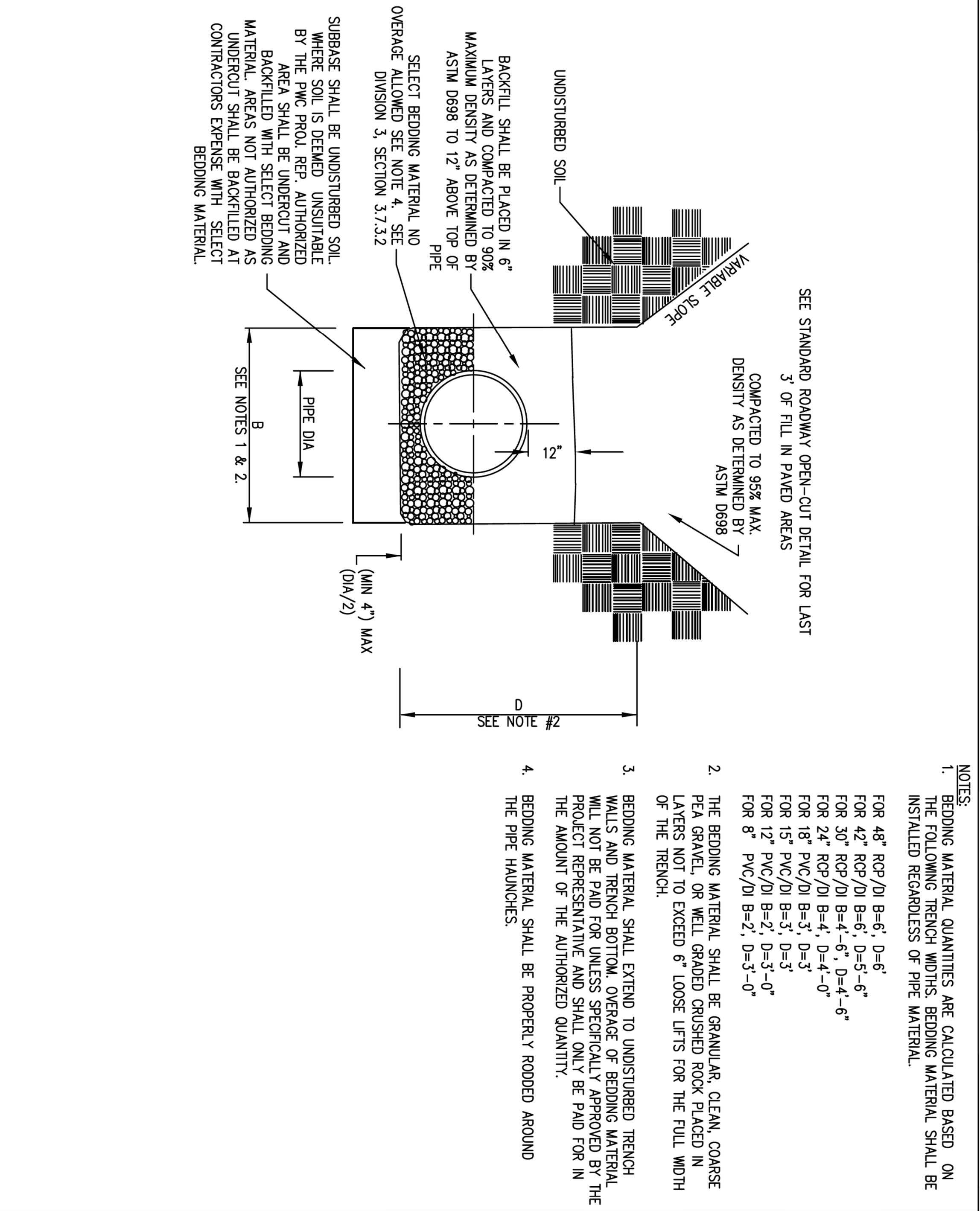

DRAWING NO. 4 — REVISION DATE 05/2012 — TRENCH DETAIL — AQUA — Aqua North Carolina, Inc.

SEWER

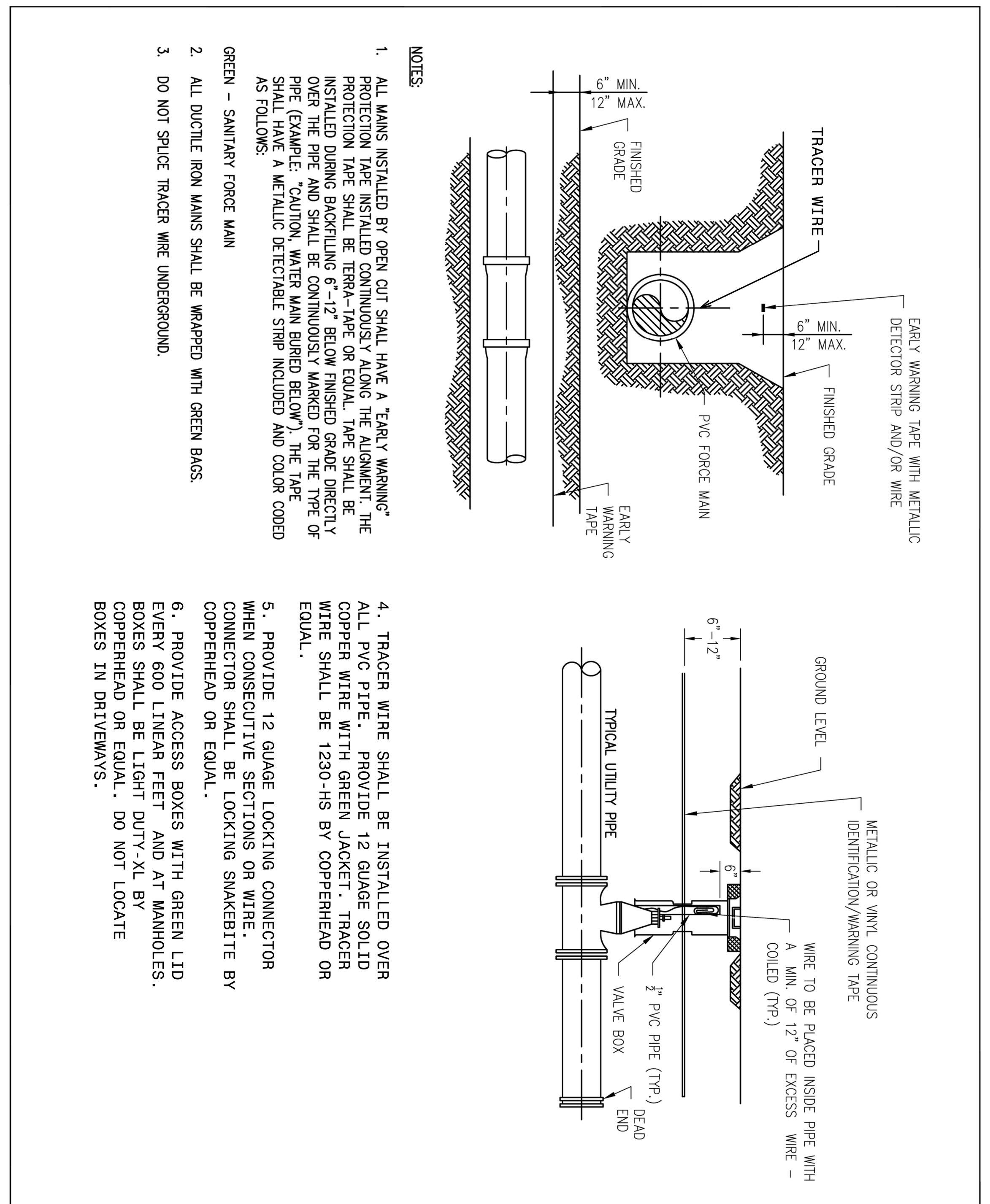

DRAWING NO. 5 — REVISION DATE 05/2012 — UTILITY PIPE LOCATION MATERIALS — AQUA — Aqua North Carolina, Inc.

SEWER

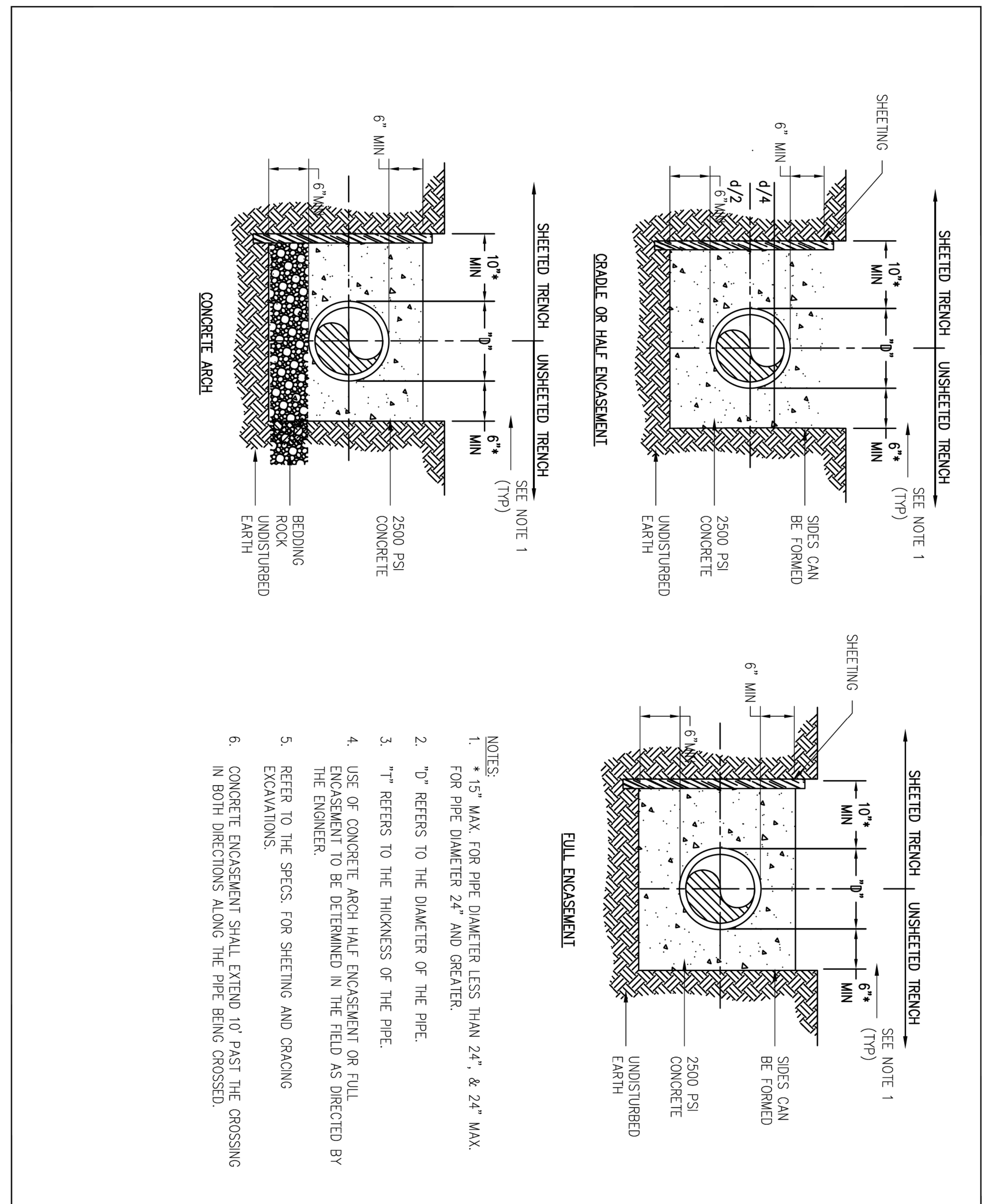

DRAWING NO. 6 — REVISION DATE 05/2012 — CONCRETE ARCH & ENCASEMENT DETAILS — AQUA — Aqua North Carolina, Inc.

SEWER

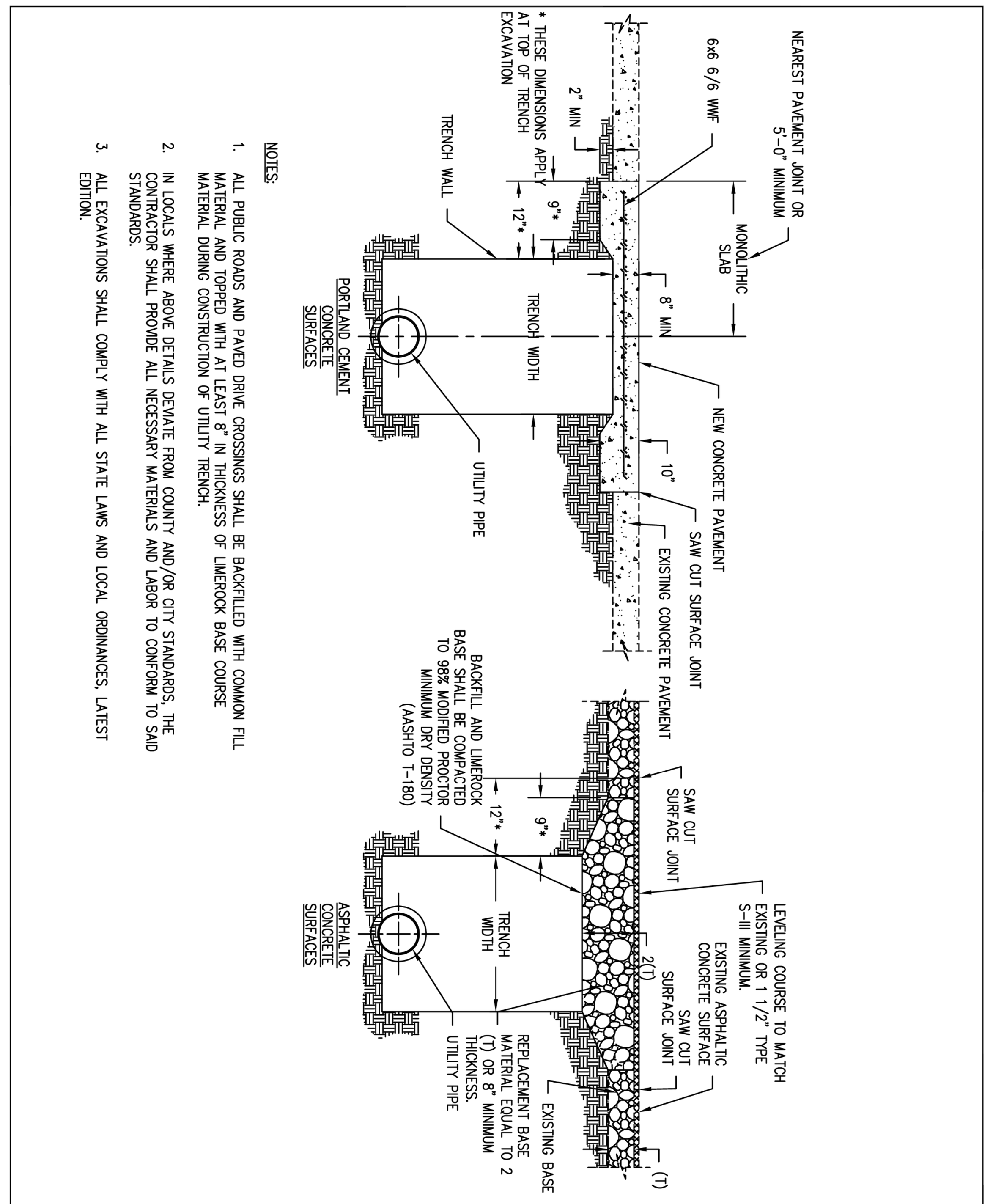

DRAWING NO. 7 — REVISION DATE 05/2012 — STANDARD ROADWAY OPEN-CUT DETAIL — AQUA — Aqua North Carolina, Inc.

WATER & SEWER

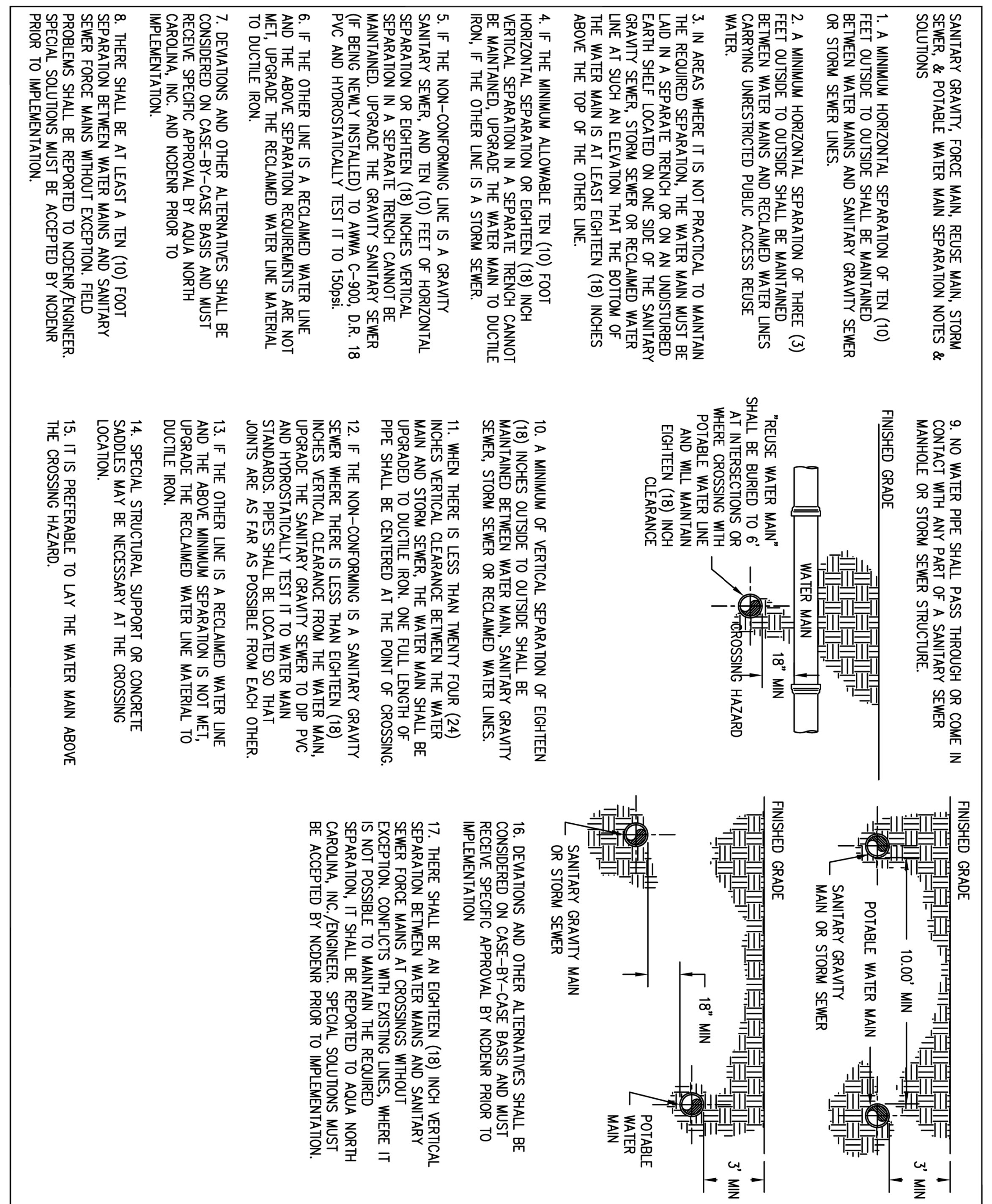

DRAWING NO. 8 — REVISION DATE 05/2012 — UTILITY SEPARATION DETAILS — AQUA — Aqua North Carolina, Inc.

WATER & SEWER

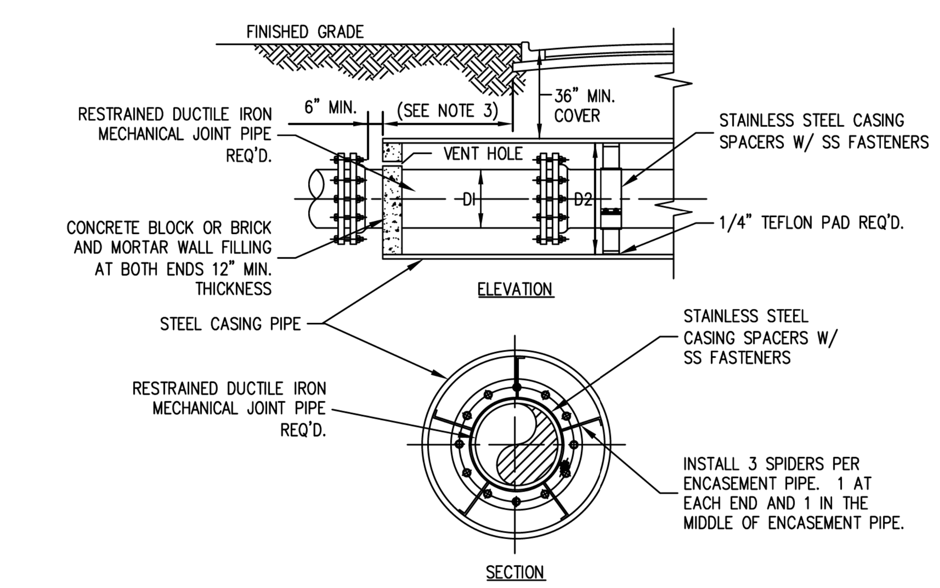

CARRIER PIPE AND CASING PIPE SIZES (MIN.)										
CARRIER PIPE NOM. DIA. (DI)	2	4	6	8	10	12	14	16	20	24
CASING PIPE NOM. DIA. (D2)	6	14	16	18	22	24	30	30	36	48
WALL THICKNESS (IN.) NCDOT	0.250	0.250	0.250	0.250	0.250	0.250	0.312	0.312	0.375	0.500
WALL THICKNESS (IN.) RAILROAD	0.250	0.250	0.250	0.312	0.375	0.375	0.500	0.500	0.563	0.625

NOTES:

1. WHEN CONSTRUCTION IS WITHIN NCDOT JURISDICTION, ADDITIONAL REQUIREMENTS OF THE ENCROACHMENT AGREEMENT SHALL BE MET.
2. STAINLESS STEEL CASING SPACERS ARE REQUIRED AS SHOWN.
3. WHERE PRACTICAL, CASING SHALL EXTEND A MIN. OF 8' BEYOND EDGE OF PAVEMENT OR LONGER AS REQUIRED BY LOCAL PERMITTING AGENCIES.
4. A MINIMUM OF 3 CASING SPACERS PER 20 LINEAR FEET OF INSTALLED CARRIER PIPE SHALL BE PROVIDED.

DRAWING NO. 9 — REVISION DATE 05/2012 — BORE & JACK DETAIL CASING — AQUA — Aqua North Carolina, Inc.

SEWER

DocuSign Envelope ID: DD6697F0-5756-45D6-A4E1-3EC64FEB6390

PROJECT TYPICAL DETAILS

Dewberry
2610 WYCLIFF ROAD
SUITE 410
RALEIGH, NC 27607
PHONE: 919.881.9939
NC COA No. F-0929

PROJECT REFERENCE NO.	SHEET NO.
R-3825B	UC-3CQ

DESIGNED BY:
DRAWN BY:
CHECKED BY:
APPROVED BY:
REVISED:

NORTH CAROLINA DEPARTMENT OF TRANSPORTATION

UTILITIES ENGINEERING SEC.
PHONE:(919)707-6690
FAX:(919)250-4151

NORTH CAROLINA PROFESSIONAL SEAL 046000 ENGINEER TIMOTHY J. RITACCO
DocuSigned by: Timothy J. Ritacco
BDC26629663C4FB...
8/14/2018 1:43:20 PM EDT

UTILITY CONSTRUCTION PLANS ONLY

UTILITY CONSTRUCTION

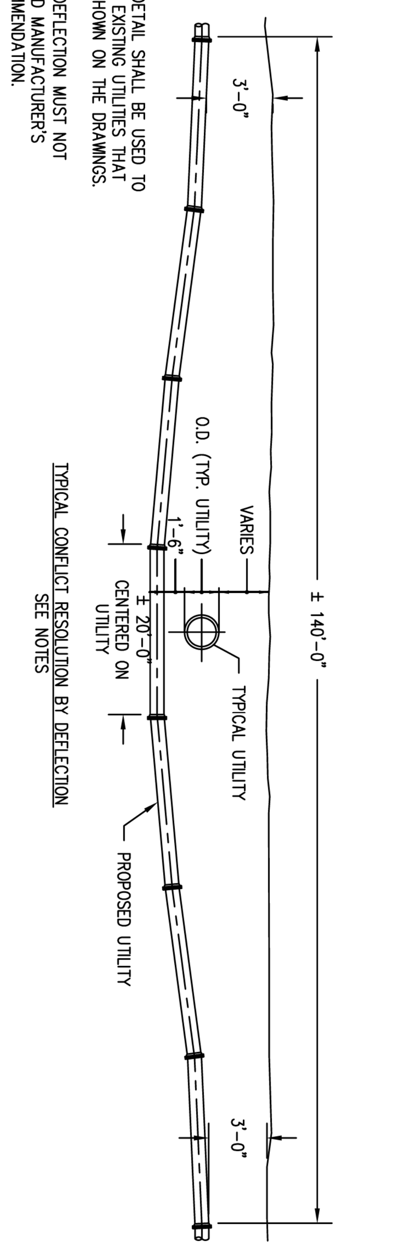

TYPICAL CONFLICT RESOLUTION BY DEFLECTION
SEE NOTES

NOTES:
1. THIS DETAIL SHALL BE USED TO AVOID EXISTING UTILITIES THAT ARE SHOWN ON THE DRAWINGS.
2. PIPE DEFLECTION MUST NOT EXCEED MANUFACTURER'S RECOMMENDATION.

WATER & SEWER

DRAWING NO.		
10	TYPICAL CONFLICT RESOLUTION DETAIL BY DEFLECTION	AQUA — Aqua North Carolina, Inc.
REVISION DATE 05/2012		

LENGTH IN FEET REQUIRED FOR DIP RESTRAINED JOINTS

SIZE	A DEAD END	A TEE & PLUG	B 90° BEND	B 45° BEND	B 22 ½° BEND	B 11 ¼° BEND
4"	37' (55')	37' (55')	21' (26')	18' (18')	18' (18')	18' (18')
6"	52' (78')	52' (78')	30" (36')	18' (18')	18' (18')	18' (18')
8"	67' (100')	67' (100')	36' (45')	18' (18')	18' (18')	18' (18')
10"	81' (122')	81' (122')	44' (54')	18' (22')	18' (18')	18' (18')
12"	94' (141')	94' (141')	50' (63')	21' (26')	18' (18')	18' (18')
14"	107' (160')	107' (160')	60' (72')	23' (30')	18' (18')	18' (18')
16"	120' (180')	120' (180')	64' (80')	27' (33')	18' (18')	18' (18')
20"	144' (216')	144' (216')	80' (94')	32' (39')	18' (18')	18' (18')
24"	167' (250')	167' (250')	88' (108')	37' (45')	18' (18')	18' (18')

TABLE APPLIES TO DUCTILE IRON FOR FOLLOWING CONDITIONS:
1. TEST PRESSURE: 150 PSIG
2. SOIL TYPE: SP
3. DEPTH OF COVER: 30"
4. SAFETY FACTOR: 1.5
5. COMPACTION: AS SHOWN ON DETAIL DRAWINGS

VALUES IN PARENTHESIS ARE FOR PIPE ENCASED IN POLYETHYLENE

LENGTH IN FEET REQUIRED FOR PVC RESTRAINED JOINTS

SIZE	A DEAD END	A TEE & PLUG	B 90° BEND	B 45° BEND	B 22 ½° BEND	B 11 ¼° BEND
4"	45'	45'	20'	18'	18'	18'
6"	63'	63'	28'	18'	18'	18'
8"	82'	82'	36'	18'	18'	18'
10"	98'	98'	44'	18'	18'	18'
12"	116'	116'	51'	20'	18'	18'
16"	148'	148'	63'	26'	18'	18'
20"	179'	179'	75'	31'	18'	18'
24"	208'	208'	87'	36'	18'	18'

TABLE APPLIES TO PVC PIPE FOR FOLLOWING CONDITIONS:
1. TEST PRESSURE: 150 PSIG
2. SOIL TYPE: SP
3. DEPTH OF COVER: 30"
4. SAFETY FACTOR: 1.5
5. COMPACTION: AS SHOWN ON DETAIL DRAWINGS

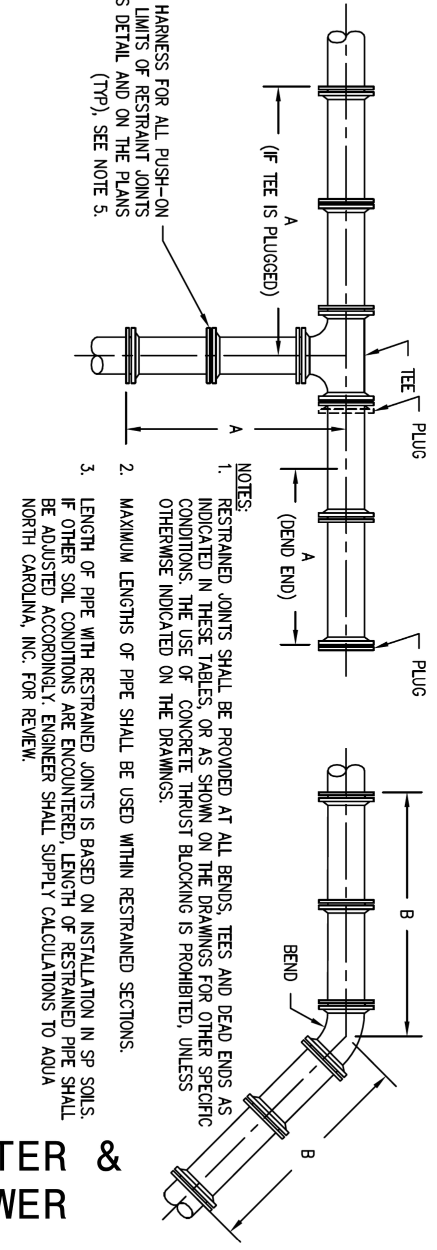

NOTES:
1. RESTRAINED JOINTS SHALL BE PROVIDED AT ALL BENDS, TEES AND DEAD ENDS AS INDICATED IN THESE TABLES, OR AS SHOWN ON THE DRAWINGS FOR OTHER SPECIFIC CONDITIONS. THE USE OF CONCRETE THRUST BLOCKING IS PROHIBITED, UNLESS OTHERWISE INDICATED ON THE DRAWINGS.
2. MAXIMUM LENGTHS OF PIPE SHALL BE USED WITHIN RESTRAINED SECTIONS.
3. LENGTH OF PIPE WITH RESTRAINED JOINTS IS BASED ON INSTALLATION IN SP SOILS. IF OTHER SOIL CONDITIONS ARE ENCOUNTERED, LENGTH OF RESTRAINED PIPE SHALL BE ADJUSTED ACCORDINGLY. ENGINEER SHALL SUPPLY CALCULATIONS TO AQUA NORTH CAROLINA, INC. FOR REVIEW.
4. PIPE TRENCH AND INSTALLATION SHALL BE DIPRA TYPE 4 AS SHOWN ON DETAILS SHEET.
5. USE EBAA SERIES 1600 OR EQUAL TO RESTRAIN NEW OR EXISTING C900 PVC PUSH-ON PIPE BELLS.

WATER & SEWER

DRAWING NO.			
11	RESTRAINED JOINT DETAIL	Dewberry 2610 WYCLIFF ROAD SUITE 410 RALEIGH, NC 27607 PHONE: 919.881.9939 NC COA No. F-0929	AQUA — Aqua North Carolina, Inc.
REVISION DATE 08/2018			

MIN. BEARING AREA EACH DIRECTION OF THRUST IN SQUARE FEET (based on soil supporting value of 2000 psf @ 200 psig test pressure)				
PIPE SIZE	TEES & DEAD ENDS	90° ELBOWS	45° ELBOW & CROSSES	22-1/2° ELBOWS
6"	4	6	3	2
8"	7	10	5	3
12"	15	21	11	6

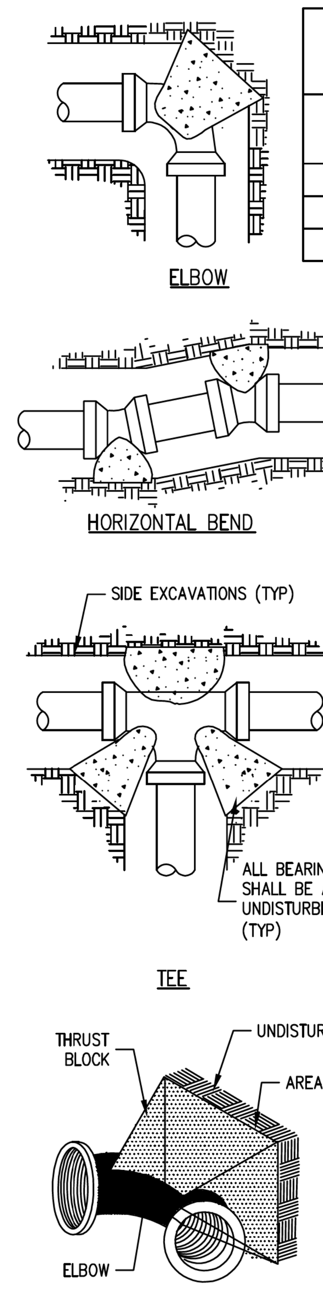

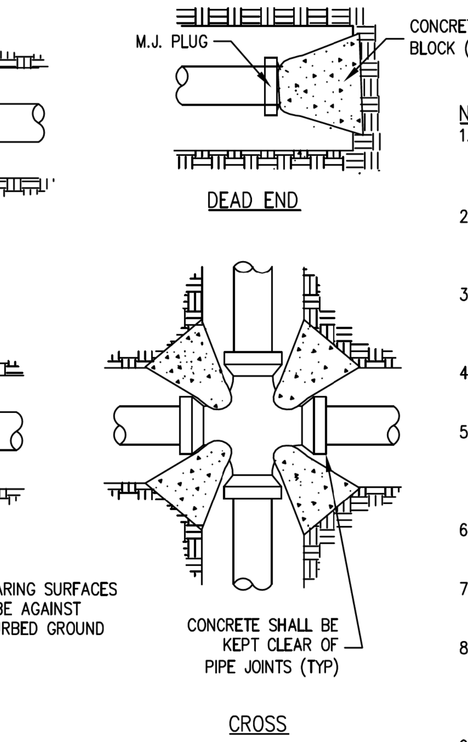

NOTES:
1. THRUST BLOCKS SHALL BE INSTALLED ON FORCE MAINS 6" THRU 12" DIA. IN THE MANNER SHOWN.
2. PIPE GREATER THAN 12 INCH DIAMETER SHALL REQUIRE RESTRAINT JOINT PIPE FOR THE PROPER LENGTH.
3. COMPACT FITTINGS ARE NOT ACCEPTABLE. STANDARD FITTINGS SHALL BE USED WITH CONCRETE THRUST BLOCKING.
4. THRUST BLOCKS SHALL BE INSTALLED ON FORCE MAIN IN THE MANNER SHOWN.
5. IF SAC-CRETE IS USED, MIXING MUST BE ON SITE UTILIZING A MECHANICAL MIXER AND THE MIX APPROVED BY AN ACI LEVEL II OPERATOR.
6. NO CONCRETE SHALL BE PLACED ON BOLTS. WRAP JOINT FITTINGS WITH PLASTIC.
7. CONCRETE SHALL BE A MINIMUM 3,000 psi AND THE TICKETS TURNED INTO THE UTILITY.
8. ALL BEARING SURFACES SHALL BE AGAINST UNDISTURBED SOIL AND SHALL BE APPROVED BY AQUA PROJECT COORDINATOR PRIOR TO PLACEMENT OF CONCRETE.
9. USE OF RESTRAINED JOINT DUCTILE IRON WILL BE REQUIRED IF SOIL CONDITIONS DO NOT ALLOW THE USE OF THRUST BLOCKS.
10. ALL VERTICAL BENDS SHALL BE RESTRAINED USING RESTRAINED JOINT DUCTILE IRON PIPE.

WATER & SEWER

DRAWING NO.			
12	TYPICAL THRUST BLOCK	Dewberry 2610 WYCLIFF ROAD SUITE 410 RALEIGH, NC 27607 PHONE: 919.881.9939 NC COA No. F-0929	AQUA — Aqua North Carolina, Inc.
REVISION DATE 08/2018			

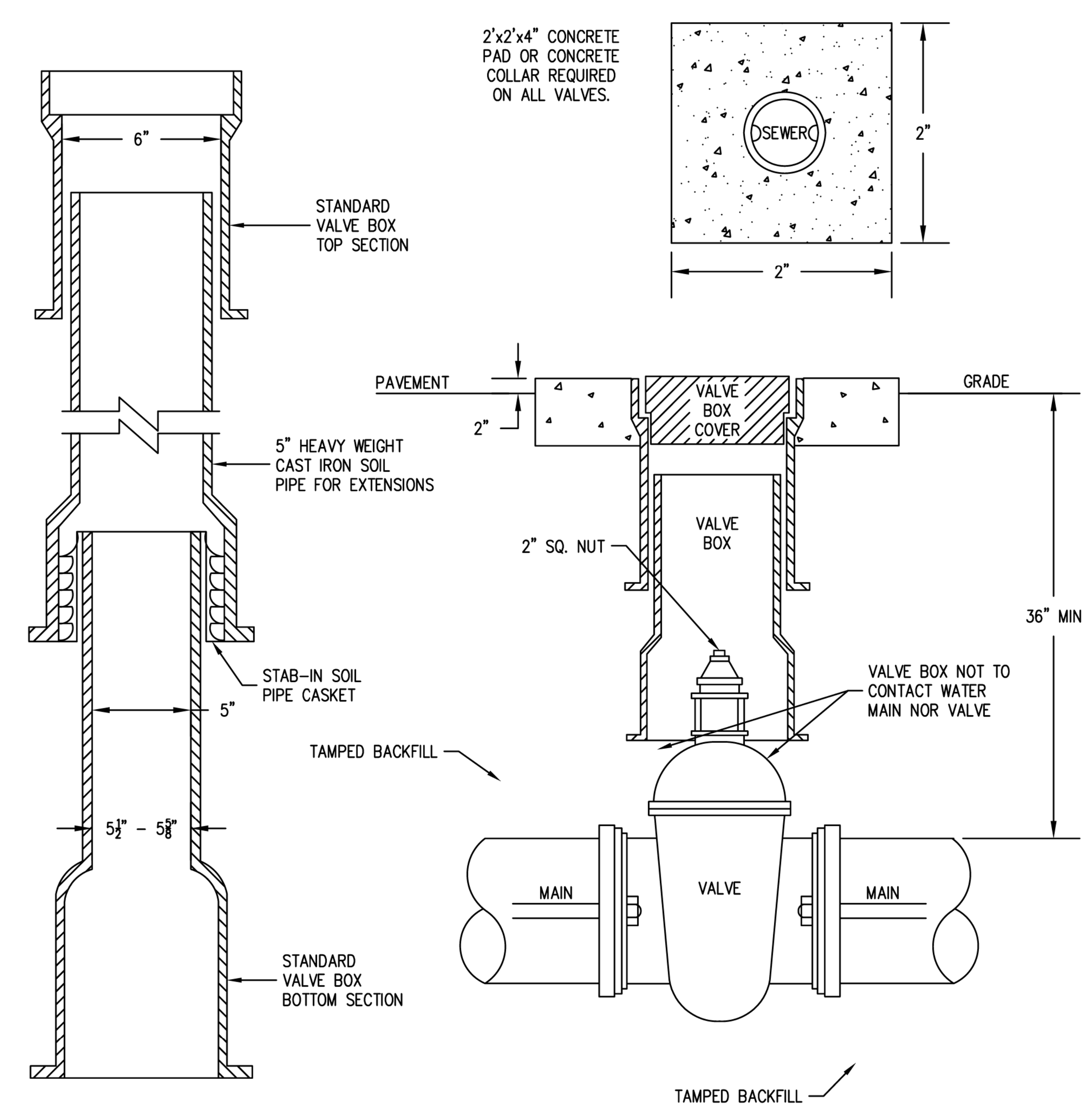

NOTES:
1. GATE VALVES SHALL COMPLY WITH AWWA C-500 AND BE IRON BODY, PARALLEL SEAT TYPE, BRONZE FITTED W/ RESILIENT SEAT. LEFT HAND OPEN (CCW).
2. BROOKS 24" VALVE BOX COLLAR MAY BE USED.

WATER & SEWER

DRAWING NO.		
13	GATE VALVE AND EXTENSION	AQUA — Aqua North Carolina, Inc.
REVISION DATE 05/2012		

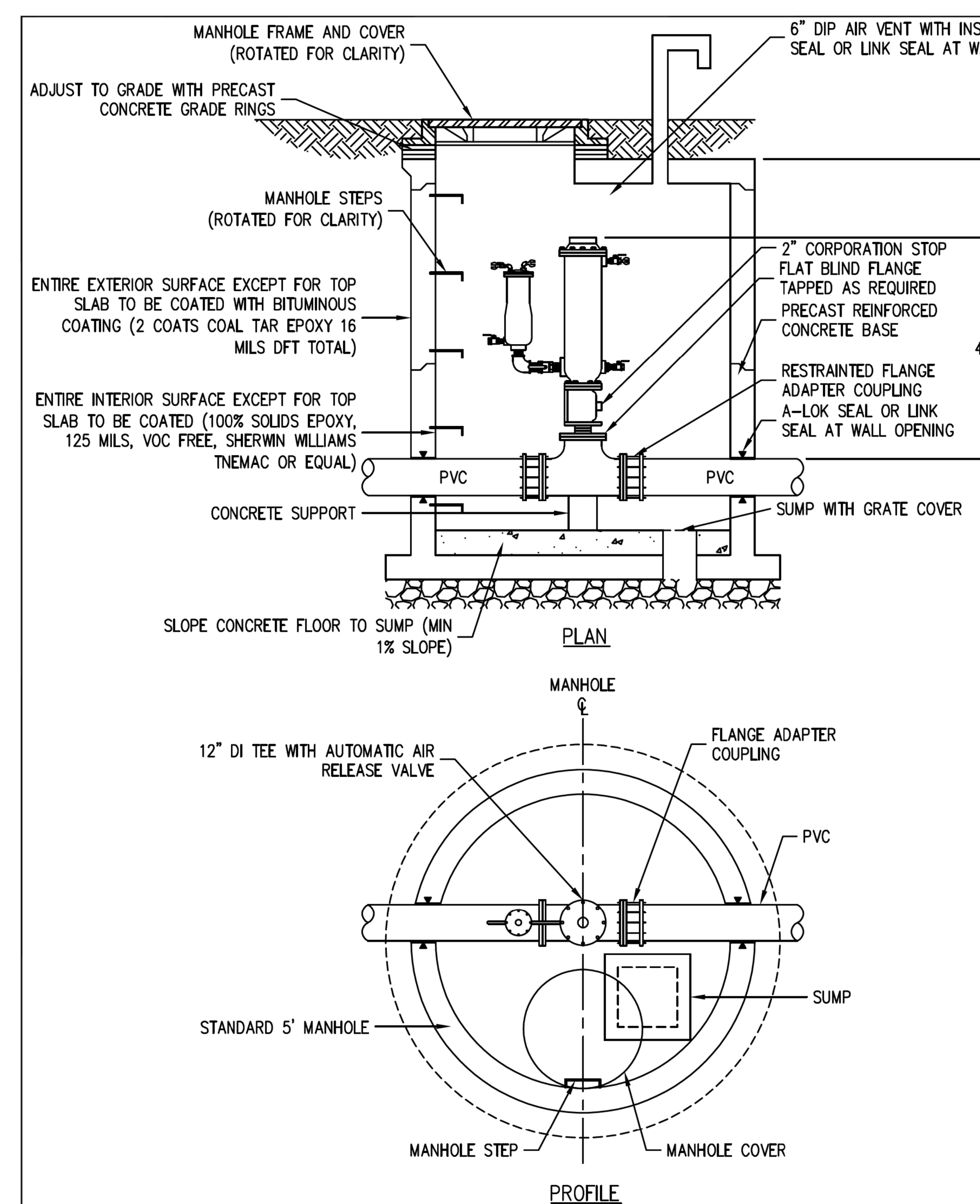

NOTES:
1. *FINISHED GRADE WILL VARY. WHEN DISTANCE BETWEEN GRADE AND TOP OF COVER WILL EXCEED 6 INCHES, INSTALL BOLLARD AT EACH CORNER TO PROTECT VAULT. SEE BOLLARD DETAIL.
2. SEE VAL-MATIC VALVE AND MANUFACTURING CORP. CATALOG FOR CONFIGURATION AND MATERIALS OF VALVES.
3. FITTINGS AND PIPE FOR VALVES SHALL BE BRASS.
4. AIR VALVES SHALL BE DUAL BODY, COMBINATION AIR VALVES FUNCTIONING AS BOTH AN AIR/VACUUM AND AIR RELEASE.
5. ALL JOINTS WITHIN MANHOLE SHALL BE FLANGED STYLE.
6. SEE STANDARD MANHOLE DETAIL FOR ADDITIONAL REQUIREMENTS FOR PRECAST MANHOLE.

SEWER

DRAWING NO.			
14	AIR RELEASE VALVE DETAIL	Dewberry 2610 WYCLIFF ROAD SUITE 410 RALEIGH, NC 27607 PHONE: 919.881.9939 NC COA No. F-0929	AQUA — Aqua North Carolina, Inc.
REVISION DATE 08/2018			

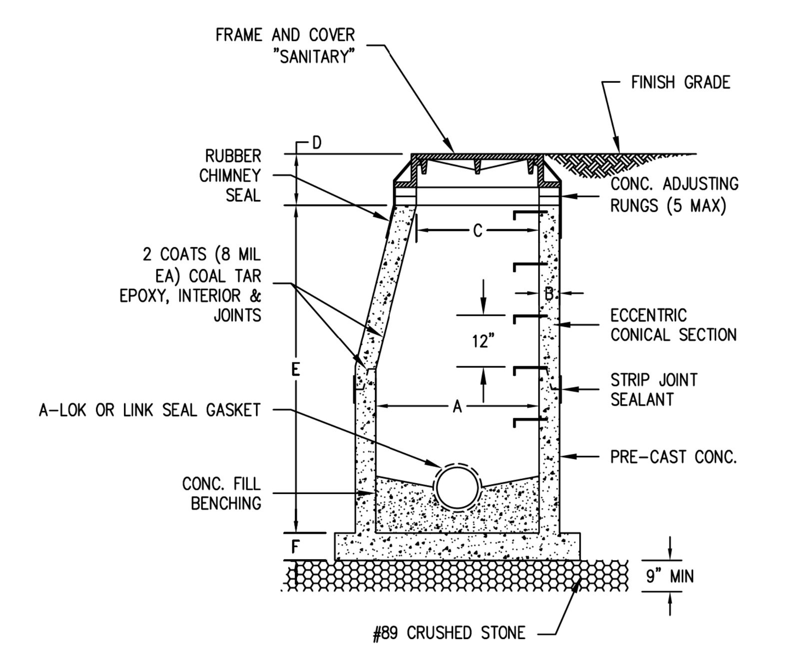

MH DEPTH	A	B	C	D	E	F
UP TO 12'	48"	8"	24.5"	15"	AS REQ'D	8"
12' TO 18'	60"	8"	24.5"	15"	AS REQ'D	10"
18' AND DEEPER	72"	8"	24.5"	15"	AS REQ'D	14"

MANHOLE SIZE
UP TO 24" PIPE: 48" MANHOLE
UP TO 36" PIPE: 60" MANHOLE
OVER 36" PIPE: 72" MANHOLE

NOTES:
1. PRE-CAST CONCRETE SHALL BE TYPE 2 CEMENT (4,000 PSI).
2. LIFT HOLES NOT PERMITTED THROUGH PRE-CAST SECTIONS.
3. ALL OPENINGS SHALL BE SEALED WITH NON-SHRINK GROUT.
4. INSTALL FLOW CHANNEL INSIDE MANHOLES.
5. SERVICE LATERALS SHALL GENERALLY NOT BE PERMITTED DIRECTLY INTO MANHOLES.
6. PLACE TWO HALF-MOON SHAPED PLYWOOD (3/8" TH. MIN.) IN BOTTOM OF MANHOLE AFTER PIPES HAVE BEEN CONNECTED TO KEEP DEBRIS FROM ENTERING SEWER.
7. REINFORCING STEEL PER ASTM C478-88A.
8. PROVIDE 5' X 5' X 12" CONCRETE COLLAR AROUND COVER FRAME, WITH 4 - #4 REBAR E.W. IN UNPAVED AREAS.
9. PROVIDE PIPE TO MANHOLE SEAL: A-LOK GASKET PER ASTM C-433 SPECIFICATION CAST INTEGRALLY IN MANHOLE WALL AND LOCATED AS DIRECTED. GASKET DESIGNED TO MEET TEST AND PERFORMANCE REQUIREMENT OF ASTM C-425 SPECIFICATION. JOINT SHALL ALLOW 10° OMNIDIRECTIONAL DIRECTION.
10. JOINT SEALANT SHALL BE BUTYL RUBBER OR BITUMINOUS MASTIC GASKET PER ASTM C-990 SPECIFICATION. PROVIDE BUTYL-LOK BY A-LOK PRODUCTS, INC.
11. MANHOLE STEPS SHALL BE ½ INCH GRADE 60 STEEL ENCAPSULATED IN POLYPROPYLENE CONFORMING TO ASTM C478.
12. MANHOLE FRAME AND GASKETED COVER SHALL BE NEENAH MODEL R-1743 OR AN APPROVED EQUAL.
13. SEAL MANHOLE FRAME AND GRADE RINGS WITH WRAPIDSEAL HEAT SHRINK ENCAPSULATION SYSTEM BY CANUSA-CPS, INC.
14. MANHOLES GREATER THAN 15' SHALL HAVE AN INTERMEDIATE LANDING CONSTRUCTED OF PRECAST CONCRETE.
15. MANHOLE UPSTREAM OF WW PLANT SHALL BE A GRIT TRAP TYPE WITH 2" SUMP.

SEWER

DRAWING NO.		
16	STANDARD MANHOLE DETAIL	AQUA — Aqua North Carolina, Inc.
REVISION DATE 05/2012		

DocuSign Envelope ID: 7583DCD1-2682-4ABE-8ED5-37F21FB27C71

PROJECT TYPICAL DETAILS

Dewberry
2610 WYCLIFF ROAD
SUITE 410
RALEIGH, NC 27607
PHONE: 919.881.9939
NC COA No. F-0929

PROJECT REFERENCE NO.	SHEET NO.
R-3825B	UC-3DQ

DESIGNED BY:
DRAWN BY:
CHECKED BY:
APPROVED BY:
REVISED:

NORTH CAROLINA DEPARTMENT OF TRANSPORTATION

UTILITIES ENGINEERING SEC.
PHONE:(919)707-6690
FAX:(919)250-4151

NORTH CAROLINA PROFESSIONAL ENGINEER SEAL 046000 TIMOTHY J. RITACCO
DocuSigned by: Timothy J. Ritacco
8/9/2018

UTILITY CONSTRUCTION PLANS ONLY

UTILITY CONSTRUCTION

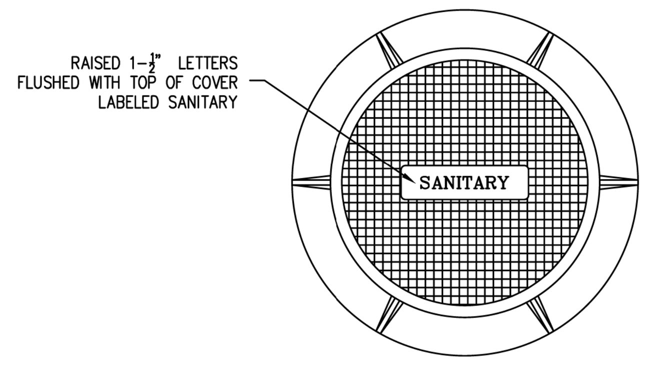

NOTES:
1. ARTERIAL ROADWAYS – USF RING AND COVER SERIES 170–BJ. HEAVY DUTY LOAD RATING. COVER WEIGHT 217#, TOTAL WEIGHT 372#.
2. ALL OTHER APPLICATIONS – USF RING AND COVER SERIES 170–J. HEAVY DUTY LOAD RATING. COVER WEIGHT 150#, TOTAL WEIGHT 305#.
3. CITY IDENTIFIER SHALL BE USED FOR CITY OWNED STRUCTURES ONLY. PRIVATE FACILITIES SHALL ONLY BE IDENTIFIED AS TO USE.
4. AQUA NORTH CAROLINA MAY REQUIRE LOCKING MANHOLES AT CERTAIN LOCATIONS.

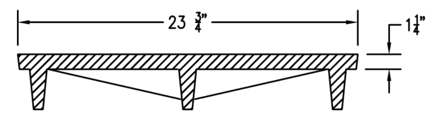

MANHOLE COVER TYPE BJ

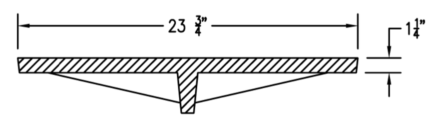

MANHOLE COVER TYPE J

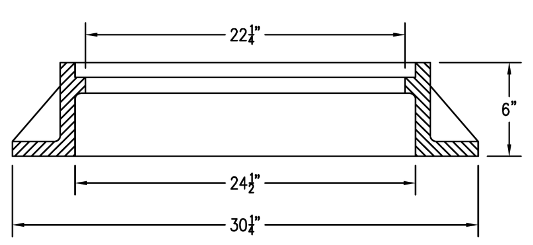

USF 170 MANHOLE RING

SEWER

DRAWING NO. 23	MANHOLE FRAME AND COVER DETAILS	AQUA Aqua North Carolina, Inc.
REVISION DATE 05/2012		

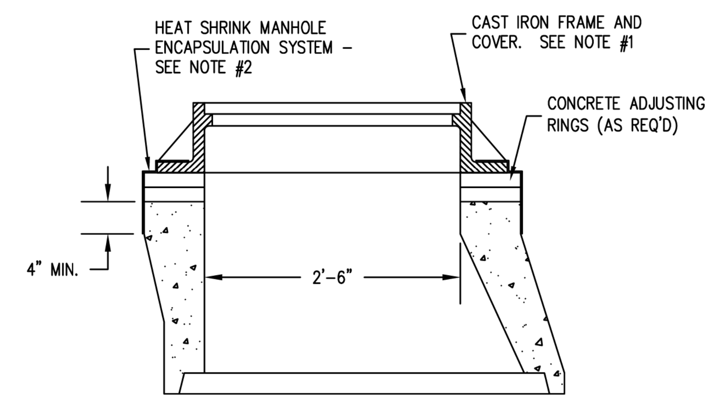

CONICAL MANHOLE TOP

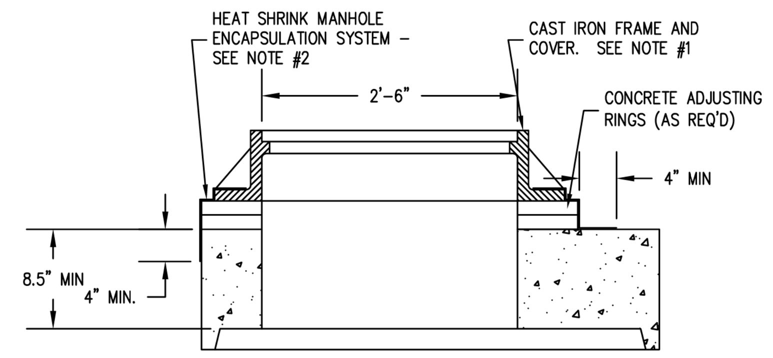

FLAT MANHOLE TOP

NOTES:
1. MANHOLE FRAME AND COVER SHALL INCLUDE O-RING TYPE GASKET TO PREVENT INFLOW. PICK HOLES SHALL NOT PENETRATE COVER UNLESS CALLED FOR ON THE PLAN.
2. SEAL MANHOLE FRAME AND GRADE RINGS WITH WRAPIDSEAL HEAT SHRINK ENCAPSULATION SYSTEM BY CANUSA–CPS, INC.

SEWER

DRAWING NO. 24	STANDARD MANHOLE FRAMES AND COVERS	AQUA Aqua North Carolina, Inc.
REVISION DATE 05/2012		

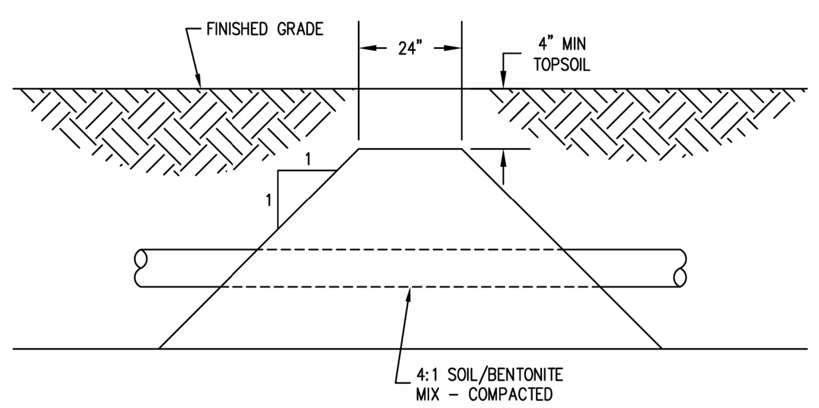

NOTES: PROVIDE CLAY/SOIL DAMS AS FOLLOWS, MINIMUM, OR AS NOTED ON THE PLAN

SLOPE	SPACING
0% – 5%	400'
6% – 10%	200'
OVER 10%	100'

WATER & SEWER

DRAWING NO. 25	ANTI–SEEPAGE COLLAR	AQUA Aqua North Carolina, Inc.
REVISION DATE 05/2012		

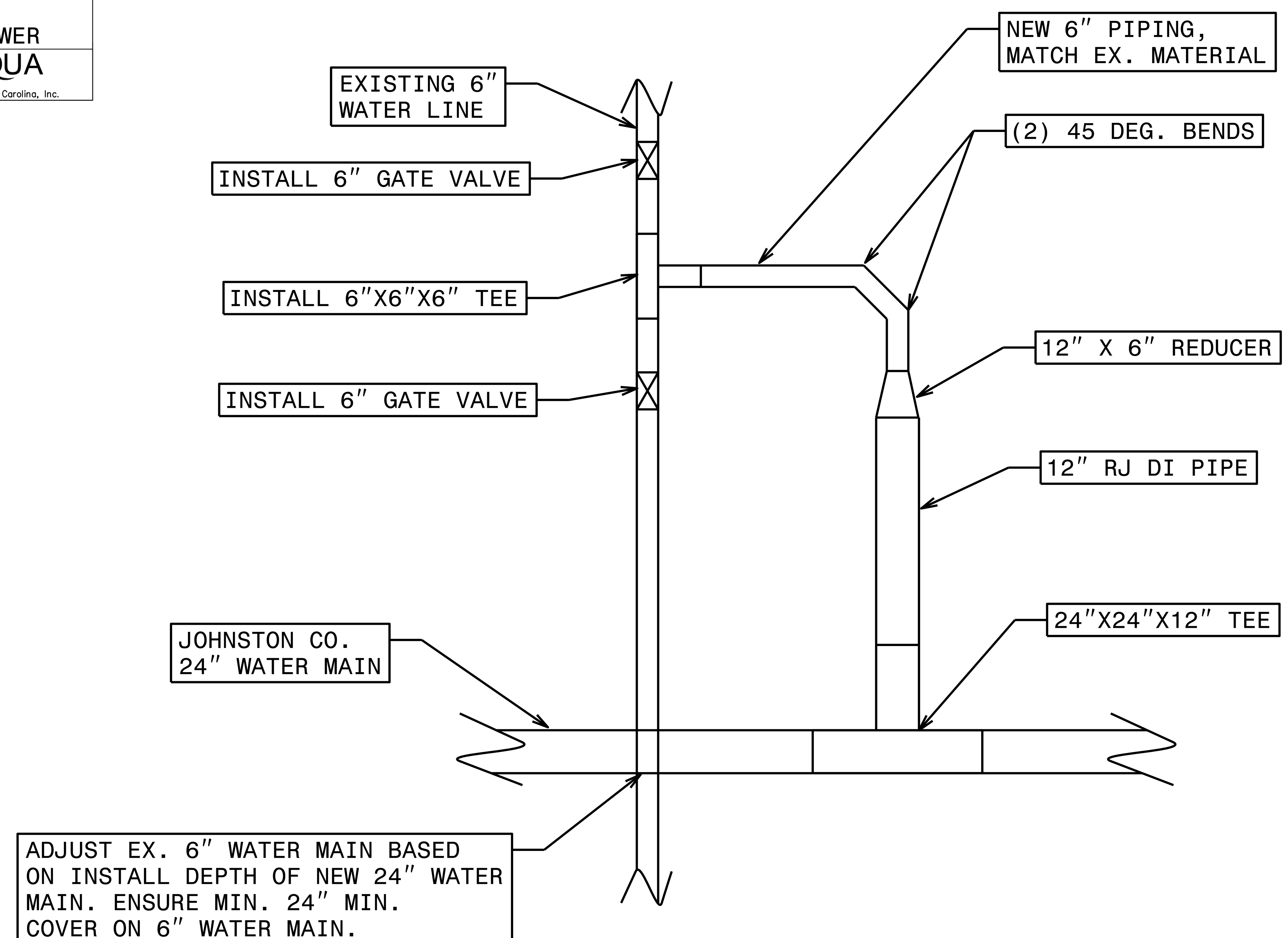

WATER LINE CONNECTION DETAIL

DocuSign Envelope ID: DD6697F0-5756-45D6-A4E1-3EC64FEB6390

8/17/99

REVISIONS

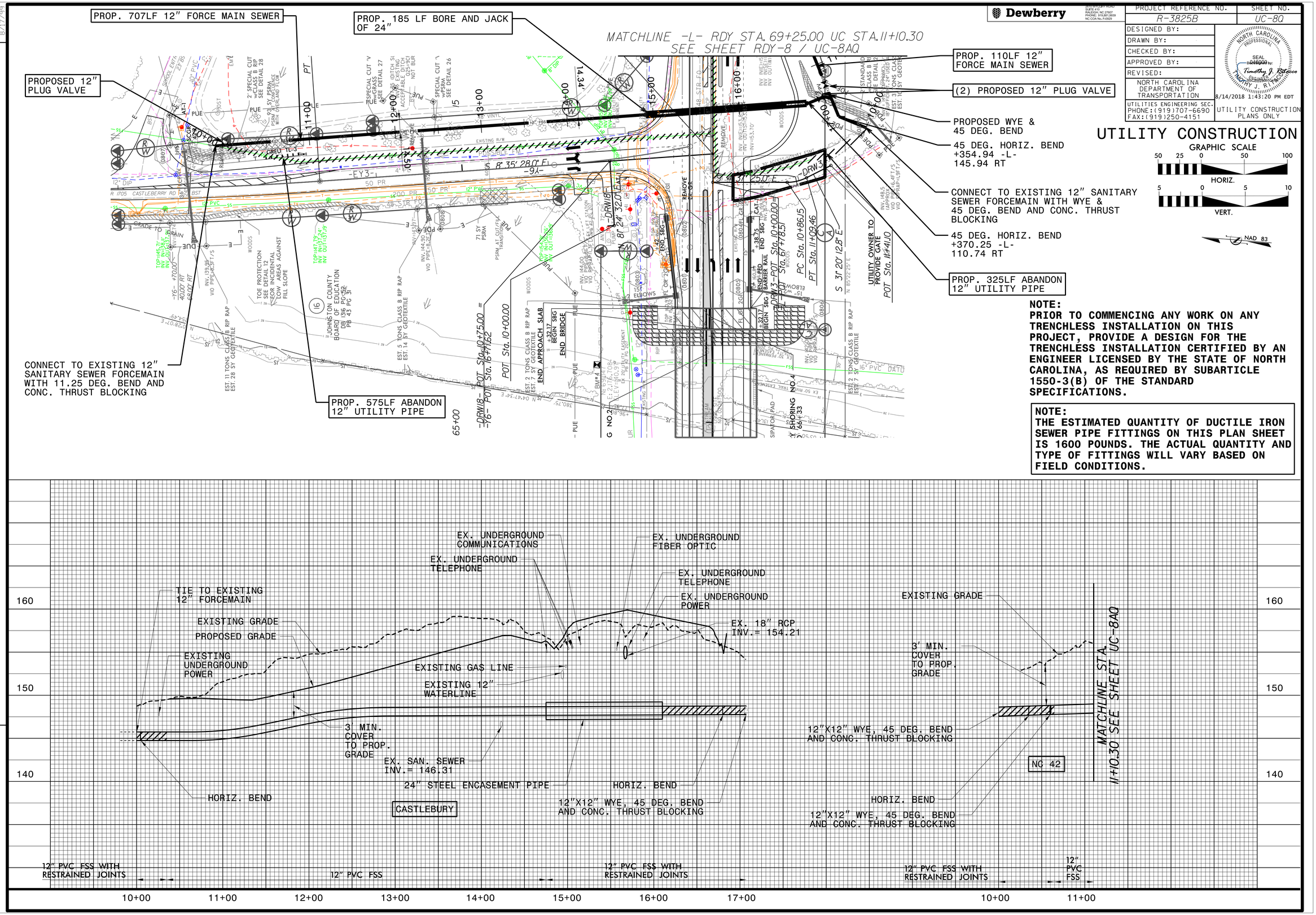

Dewberry
8401 ARLIGTON BLVD
SUITE 100
FAIRFAX, VA 22031
PHONE: 919.881.9939
NC COA No. F-0929

PROJECT REFERENCE NO.	SHEET NO.
R-3825B	UC-8Q

DESIGNED BY:
DRAWN BY:
CHECKED BY:
APPROVED BY:
REVISED:

NORTH CAROLINA DEPARTMENT OF TRANSPORTATION
UTILITIES ENGINEERING SEC.
PHONE:(919)707-6690
FAX:(919)250-4151

NORTH CAROLINA PROFESSIONAL SEAL 040000 Timothy J. Rickenbach
TIMOTHY J. RICKENBACH
8/14/2018 1:43:20 PM EDT

UTILITY CONSTRUCTION PLANS ONLY

UTILITY CONSTRUCTION

GRAPHIC SCALE
50 25 0 50 100
HORIZ.
5 0 5 10
VERT.

NOTE:
PRIOR TO COMMENCING ANY WORK ON ANY TRENCHLESS INSTALLATION ON THIS PROJECT, PROVIDE A DESIGN FOR THE TRENCHLESS INSTALLATION CERTIFIED BY AN ENGINEER LICENSED BY THE STATE OF NORTH CAROLINA, AS REQUIRED BY SUBARTICLE 1550-3(B) OF THE STANDARD SPECIFICATIONS.

NOTE:
THE ESTIMATED QUANTITY OF DUCTILE IRON SEWER PIPE FITTINGS ON THIS PLAN SHEET IS 1600 POUNDS. THE ACTUAL QUANTITY AND TYPE OF FITTINGS WILL VARY BASED ON FIELD CONDITIONS.

DocuSign Envelope ID: DD6697F0-5756-45D6-A4E1-3EC64FEB6390

8/17/99

REVISIONS

Dewberry
2609 WALKER AVENUE
SUITE 400
RALEIGH, NC 27607
PHONE: 919.881.9939
NC COA No. F-0929

PROJECT REFERENCE NO.	SHEET NO.
R-3825B	UC-8AQ

DESIGNED BY:
DRAWN BY:
CHECKED BY:
APPROVED BY:
REVISED:

NORTH CAROLINA DEPARTMENT OF TRANSPORTATION
UTILITIES ENGINEERING SEC.
PHONE:(919)707-6690
FAX:(919)250-4151

NORTH CAROLINA PROFESSIONAL SEAL 040000 ENGINEER Timothy J. Kittrell SIGNATURE TIMOTHY J. KITTRELL
8/14/2018 1:43:20 PM EDT
UTILITY CONSTRUCTION PLANS ONLY

NAD 83

UTILITY CONSTRUCTION

GRAPHIC SCALE
50 25 0 50 100
HORIZ.
5 0 5 10
VERT.

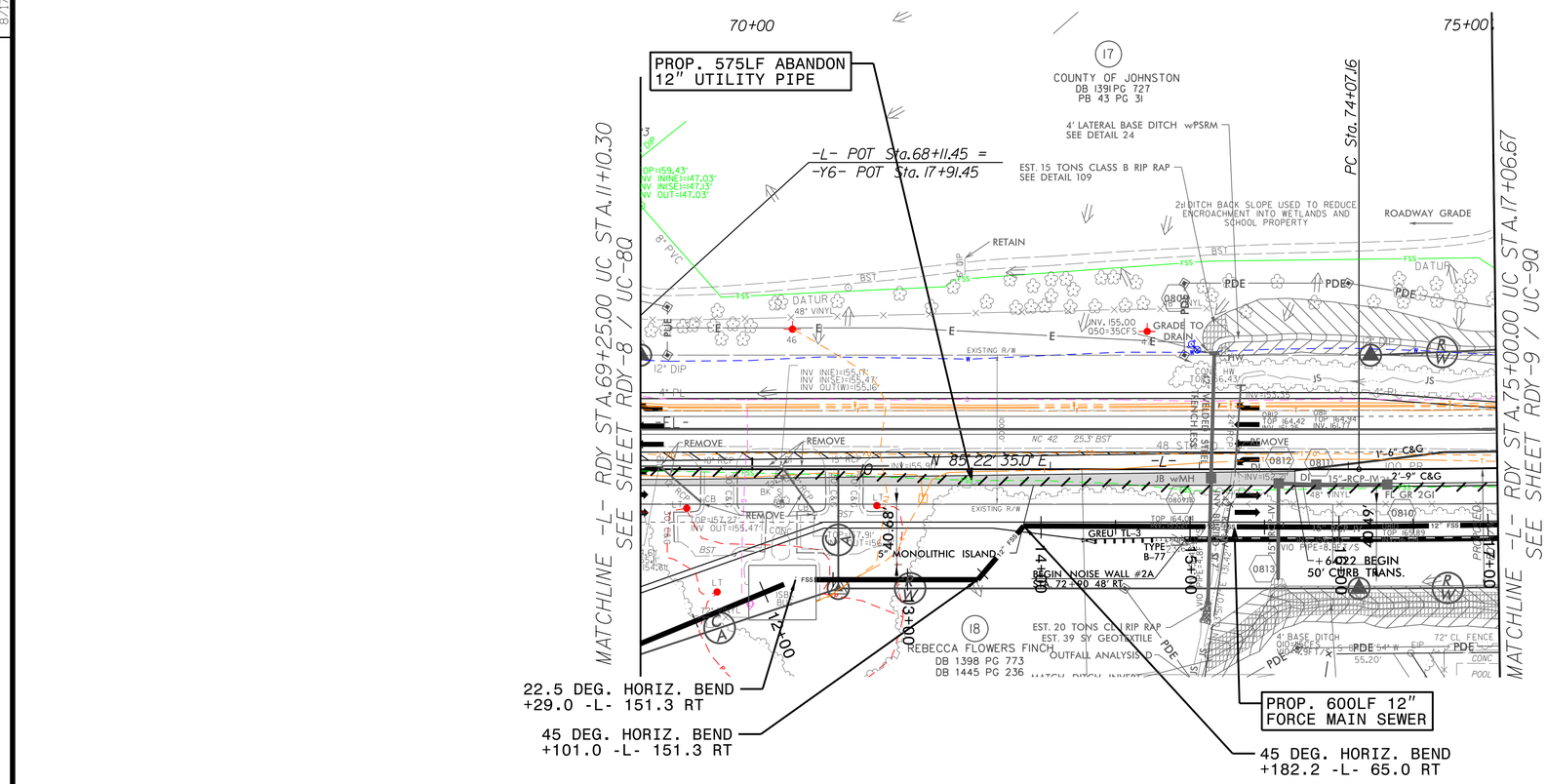

NOTE:
THE ESTIMATED QUANTITY OF DUCTILE IRON SEWER PIPE FITTINGS ON THIS PLAN SHEET IS 700 POUNDS. THE ACTUAL QUANTITY AND TYPE OF FITTINGS WILL VARY BASED ON FIELD CONDITIONS.

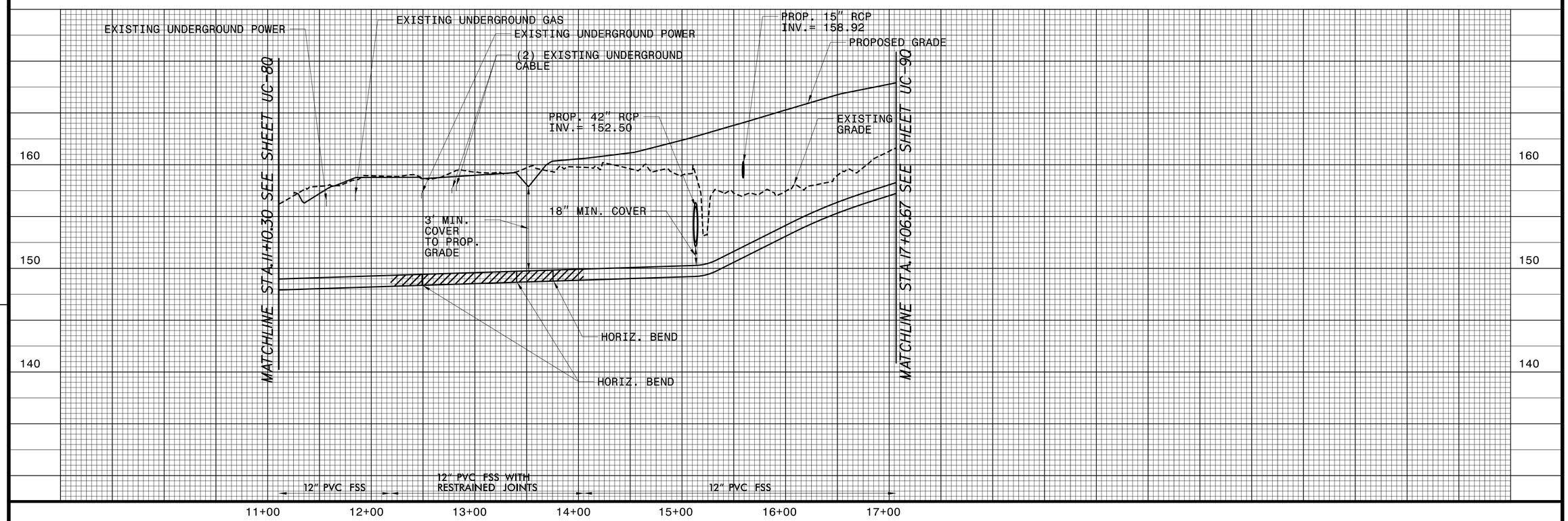

DocuSign Envelope ID: D1AA1FE6-54A9-4C6D-9E2D-1C164F32B3A6

8/17/99

REVISIONS

NOTE:
THE ESTIMATED QUANTITY OF DUCTILE IRON SEWER PIPE FITTINGS ON THIS PLAN SHEET IS 1000 POUNDS. THE ACTUAL QUANTITY AND TYPE OF FITTINGS WILL VARY BASED ON FIELD CONDITIONS.

NOTE:
THE ESTIMATED QUANTITY OF DUCTILE IRON WATER PIPE FITTINGS ON THIS PLAN SHEET IS 1500 POUNDS. THE ACTUAL QUANTITY AND TYPE OF FITTINGS WILL VARY BASED ON FIELD CONDITIONS.

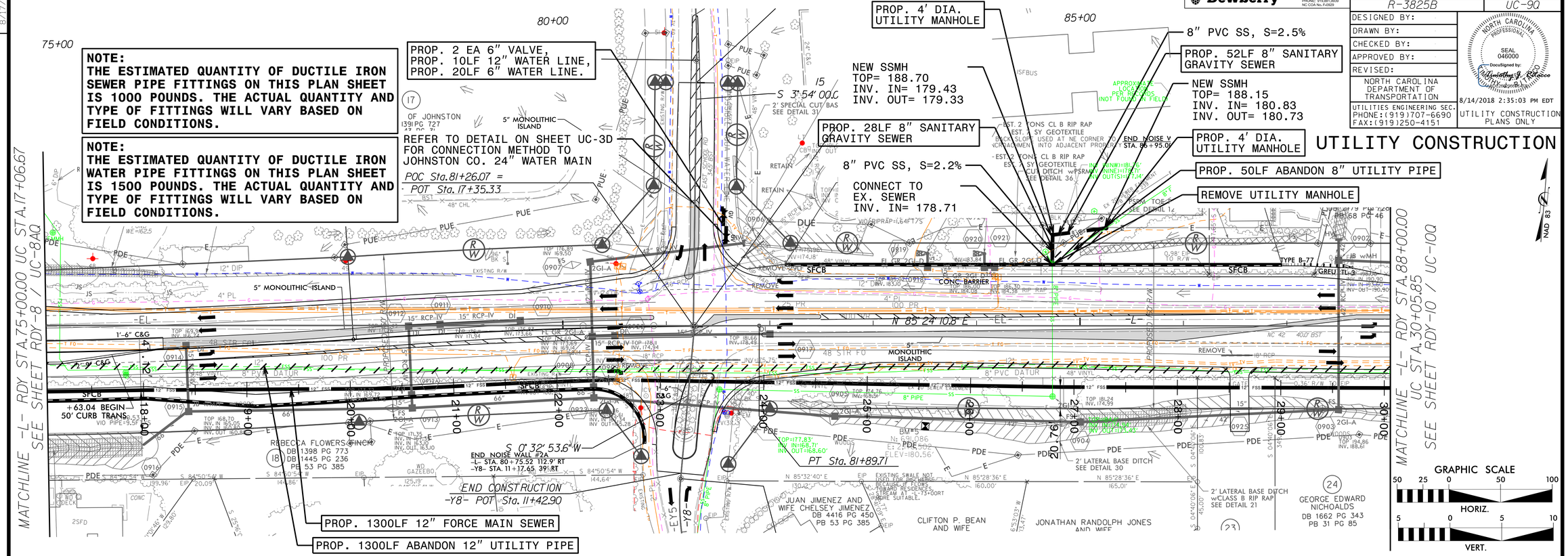

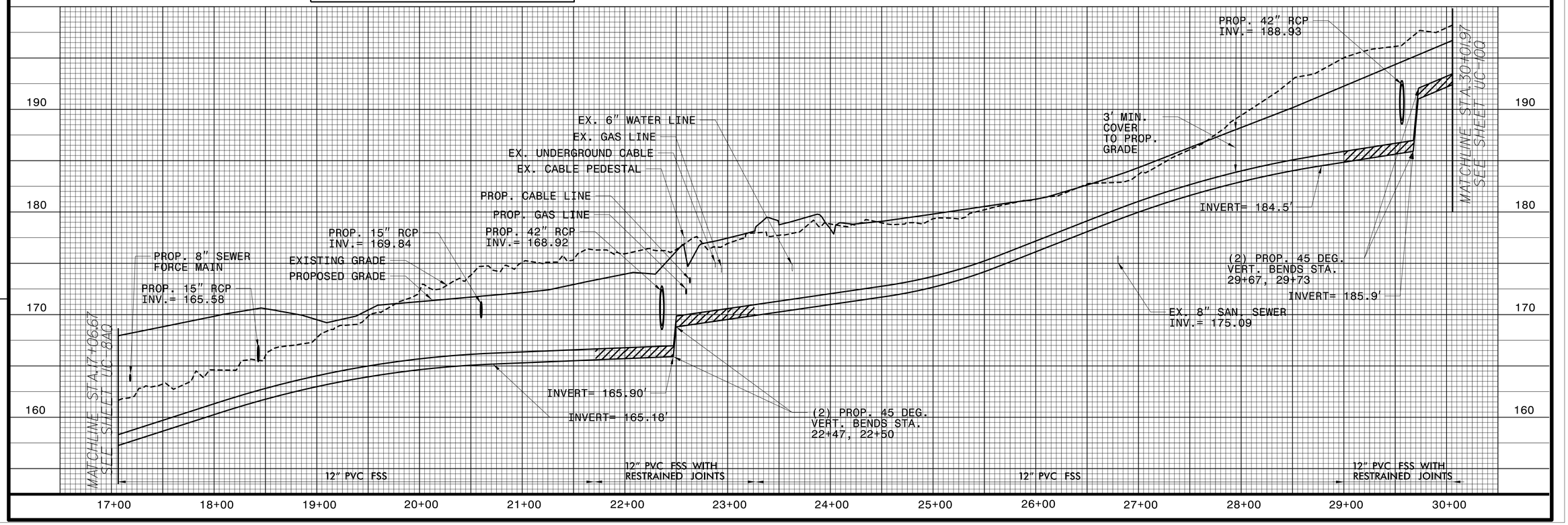

DocuSign Envelope ID: DD6697F0-5756-45D6-A4E1-3EC64FEB6390

RDY-10

8/17/99

REVISIONS

NOTE:
THE ESTIMATED QUANTITY OF DUCTILE IRON SEWER PIPE FITTINGS ON THIS PLAN SHEET IS 800 POUNDS. THE ACTUAL QUANTITY AND TYPE OF FITTINGS WILL VARY BASED ON FIELD CONDITIONS.

NOTE:
THE ESTIMATED QUANTITY OF DUCTILE IRON WATER PIPE FITTINGS ON THIS PLAN SHEET IS 1500 POUNDS. THE ACTUAL QUANTITY AND TYPE OF FITTINGS WILL VARY BASED ON FIELD CONDITIONS.

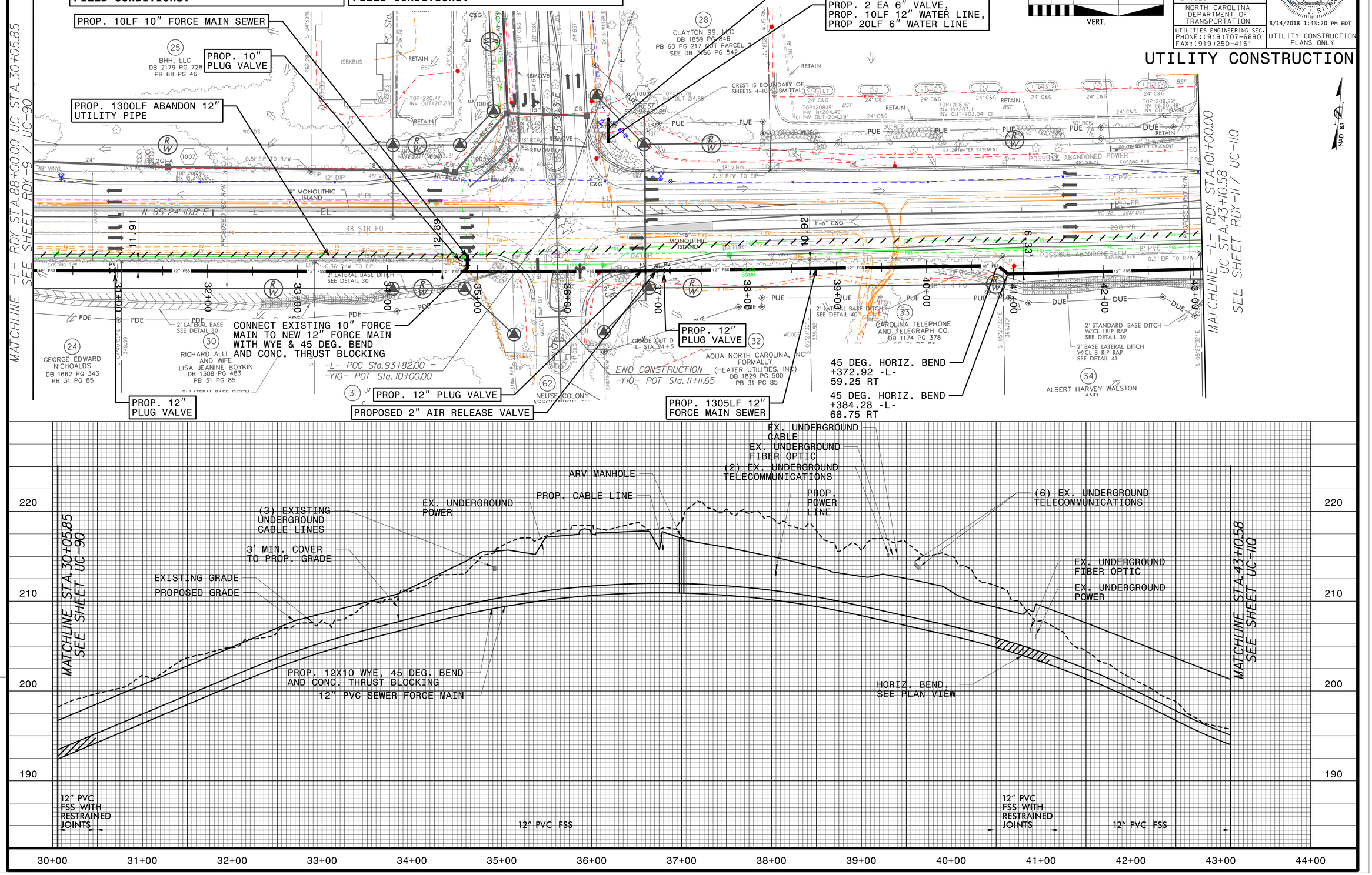

Dewberry
8401 ARLIGTON BLVD.
SUITE 100
FAIRFAX, VA 22031
PHONE: 919.881.9939
NC COA No. F-0929

GRAPHIC SCALE
50 25 0 50 100
HORIZ.
5 0 5 10
VERT.

PROJECT REFERENCE NO.	SHEET NO.
R-3825B	UC-10Q
DESIGNED BY:	
DRAWN BY:	
CHECKED BY:	
APPROVED BY:	
REVISED:	
NORTH CAROLINA DEPARTMENT OF TRANSPORTATION	
UTILITIES ENGINEERING SEC. PHONE:(919)707-6690 FAX:(919)250-4151	8/14/2018 1:43:20 PM EDT UTILITY CONSTRUCTION PLANS ONLY

NORTH CAROLINA PROFESSIONAL SEAL 040000 ENGINEER Timothy J. Rebisco TIMOTHY J. RITACCO

UTILITY CONSTRUCTION

NAD 83

DocuSign Envelope ID: DD6697F0-5756-45D6-A4E1-3EC64FEB6390

RDY-11

Dewberry
DEWBERRY ENGINEERS INC.
8529 SEPTEMBER DRIVE
SUITE 225
RALEIGH, NC 27607
PHONE: 919.881.9939
NC COA No. F-0929

PROJECT REFERENCE NO.	SHEET NO.
R-3825B	UC-11Q

DESIGNED BY:
DRAWN BY:
CHECKED BY:
APPROVED BY:
REVISED:

NORTH CAROLINA DEPARTMENT OF TRANSPORTATION
UTILITIES ENGINEERING SEC.
PHONE: (919)707-6690
FAX: (919)250-4151

NORTH CAROLINA PROFESSIONAL SEAL 036000 ENGINEER Timothy J. Rebecco
8/14/2018 1:43:20 PM EDT

UTILITY CONSTRUCTION PLANS ONLY

GRAPHIC SCALE
HORIZ. 50 25 0 50 100
VERT. 5 0 5 10

UTILITY CONSTRUCTION

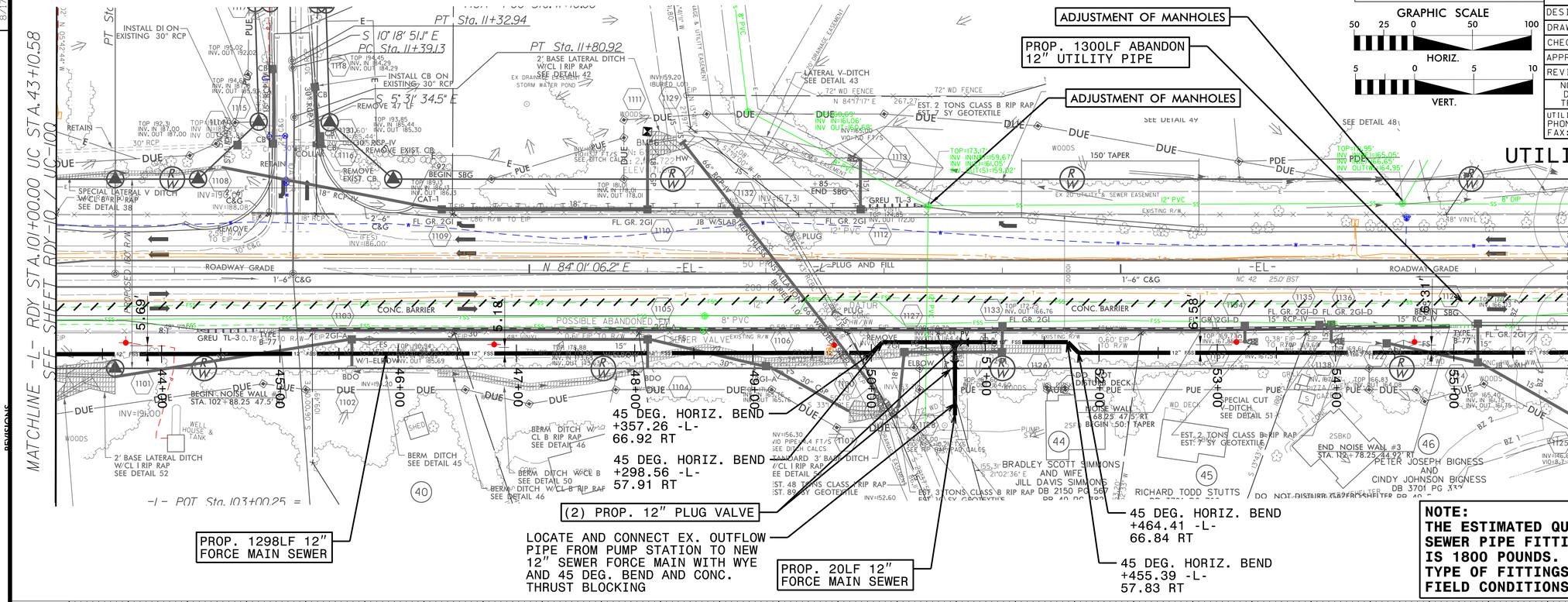

NOTE:
THE ESTIMATED QUANTITY OF DUCTILE IRON SEWER PIPE FITTINGS ON THIS PLAN SHEET IS 1800 POUNDS. THE ACTUAL QUANTITY AND TYPE OF FITTINGS WILL VARY BASED ON FIELD CONDITIONS.

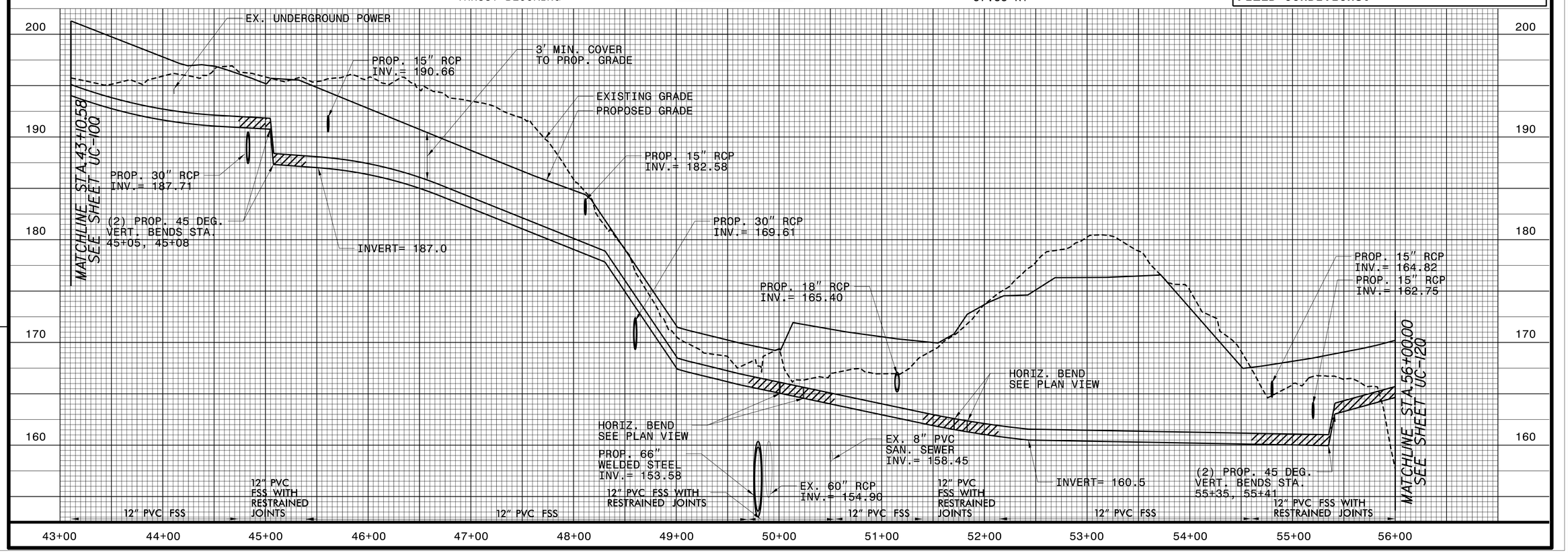

DocuSign Envelope ID: DD6697F0-5756-45D6-A4E1-3EC64FEB6390

8/17/99

REVISIONS

NOTE:
THE ESTIMATED QUANTITY OF DUCTILE IRON SEWER PIPE FITTINGS ON THIS PLAN SHEET IS 500 POUNDS. THE ACTUAL QUANTITY AND TYPE OF FITTINGS WILL VARY BASED ON FIELD CONDITIONS.

NOTE:
THE ESTIMATED QUANTITY OF DUCTILE IRON WATER PIPE FITTINGS ON THIS PLAN SHEET IS 1500 POUNDS. THE ACTUAL QUANTITY AND TYPE OF FITTINGS WILL VARY BASED ON FIELD CONDITIONS.

Dewberry
8401 ARLINGTON BLVD.
SUITE 100
FAIRFAX, VA 22031
PHONE: 919.881.9939
NC COA No. F-0929

GRAPHIC SCALE
HORIZ. 50 25 0 50 100
VERT. 5 0 5 10

PROJECT REFERENCE NO.	SHEET NO.
R-3825B	UC-12Q

DESIGNED BY:
DRAWN BY:
CHECKED BY:
APPROVED BY:
REVISED:

NORTH CAROLINA DEPARTMENT OF TRANSPORTATION
UTILITIES ENGINEERING SEC.
PHONE:(919)707-6690
FAX:(919)250-4151

NORTH CAROLINA PROFESSIONAL SEAL 040404 ENGINEER TIMOTHY J. REBOCA
Timothy J. Reboca
8/14/2018 1:43:20 PM EDT

UTILITY CONSTRUCTION PLANS ONLY

UTILITY CONSTRUCTION

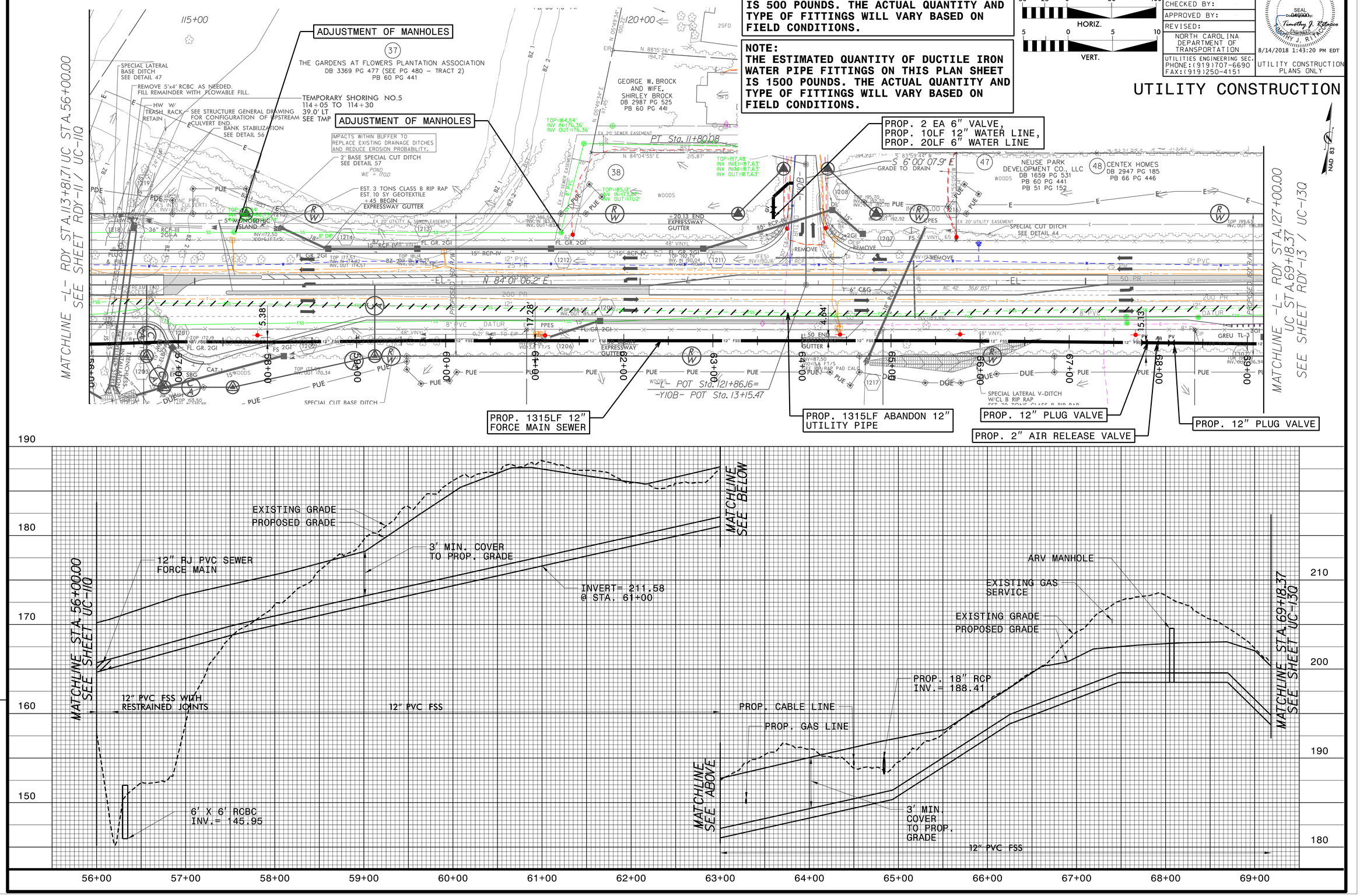

DocuSign Envelope ID: DD6697F0-5756-45D6-A4E1-3EC64FEB6390

8/17/99

REVISIONS

NOTE:
THE ESTIMATED QUANTITY OF DUCTILE IRON SEWER PIPE FITTINGS ON THIS PLAN SHEET IS 2000 POUNDS. THE ACTUAL QUANTITY AND TYPE OF FITTINGS WILL VARY BASED ON FIELD CONDITIONS.

Dewberry
2079 WALKER MILL ROAD
SUITE 100
DURHAM, NC 27707
PHONE: 919.881.9939
NC COA No. F-0929

GRAPHIC SCALE
50 25 0 50 100
HORIZ.
5 0 5 10
VERT.

PROJECT REFERENCE NO.	SHEET NO.
R-3825B	UC-13Q

DESIGNED BY:
DRAWN BY:
CHECKED BY:
APPROVED BY:
REVISED:

NORTH CAROLINA DEPARTMENT OF TRANSPORTATION
UTILITIES ENGINEERING SEC.
PHONE:(919)707-6690
FAX:(919)250-4151

NORTH CAROLINA PROFESSIONAL SEAL 030992 ENGINEER Timothy J. Rivers
8/14/2018 1:43:20 PM EDT

UTILITY CONSTRUCTION PLANS ONLY

UTILITY CONSTRUCTION

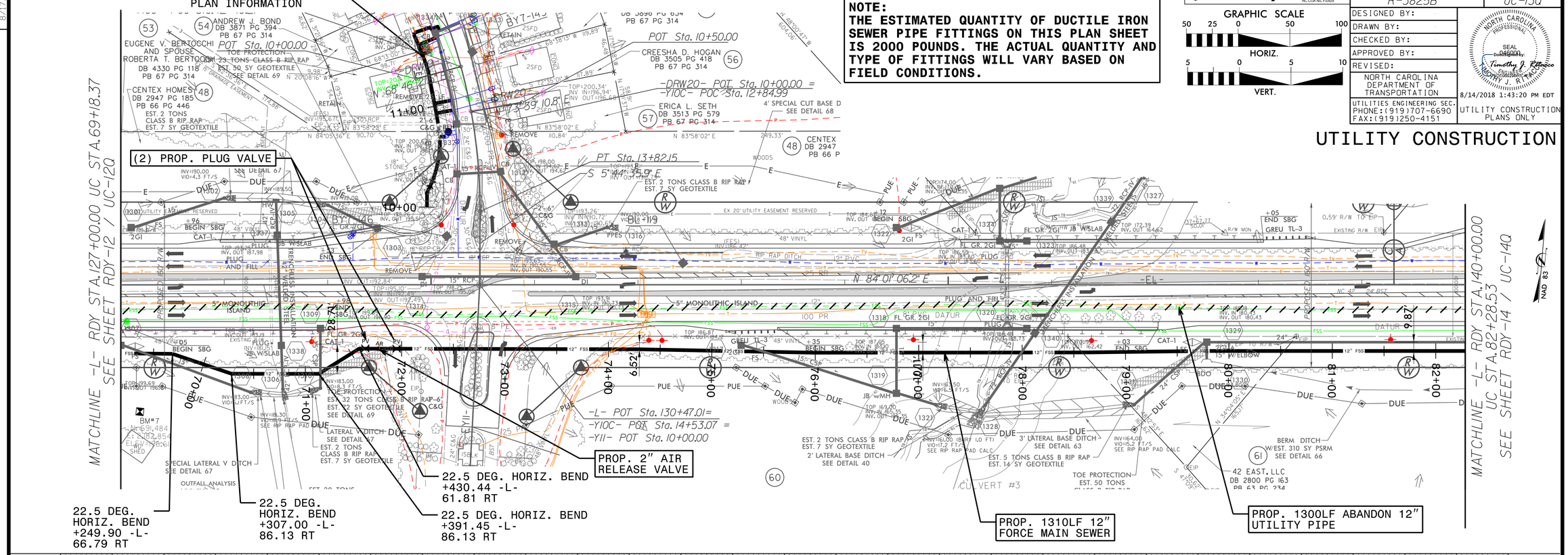

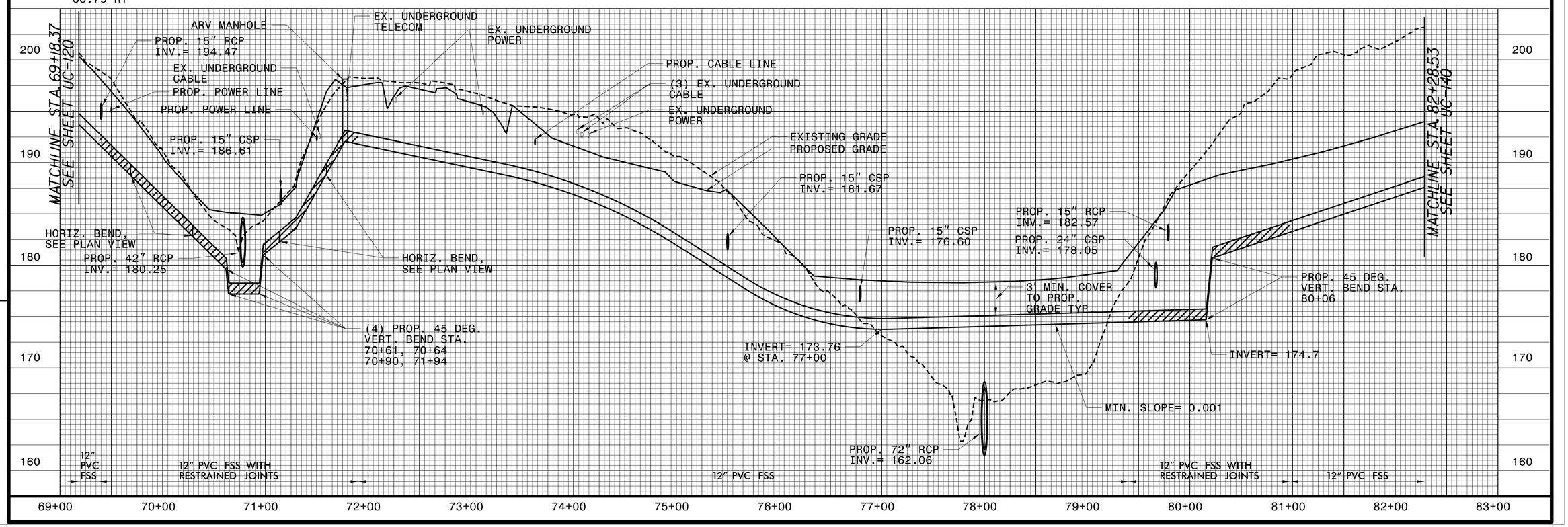

DocuSign Envelope ID: DD6697F0-5756-45D6-A4E1-3EC64FEB6390

REVISIONS

8/17/99

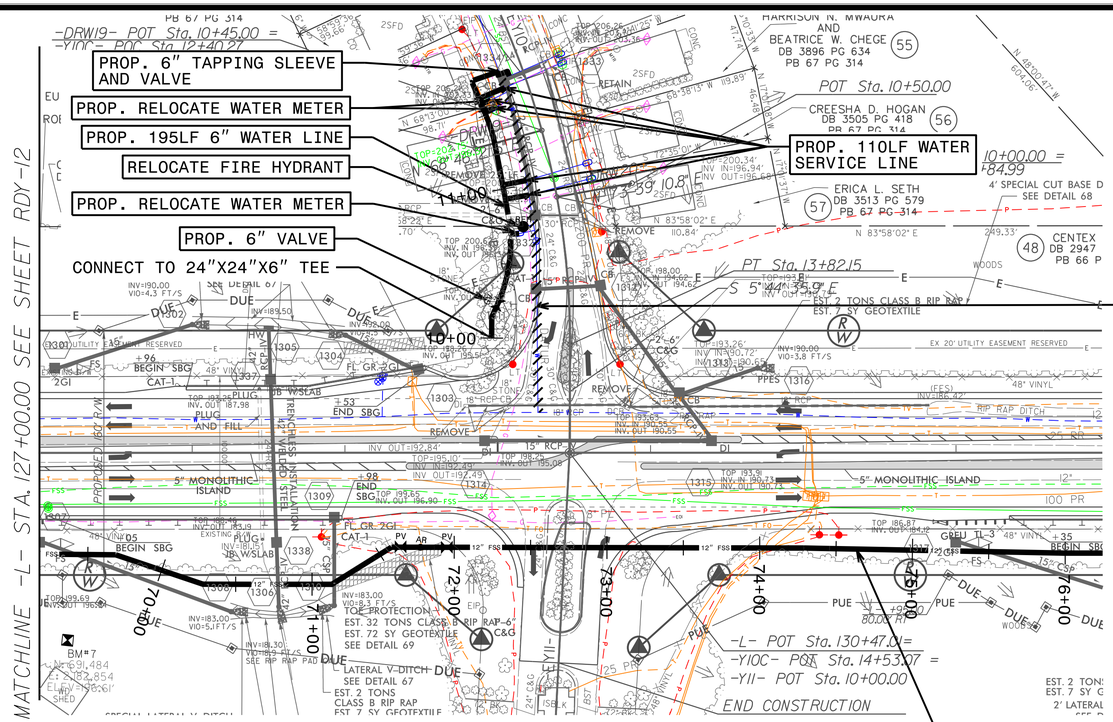

NOTE:
THE ESTIMATED QUANTITY OF DUCTILE IRON WATER PIPE FITTINGS ON THIS PLAN SHEET IS 1700 POUNDS. THE ACTUAL QUANTITY AND TYPE OF FITTINGS WILL VARY BASED ON FIELD CONDITIONS.

Dewberry
2609 WALNUT HILL ROAD
SUITE 10
DURHAM, NC 27707
PHONE: 919.881.9939
NC COA No. F-0929

GRAPHIC SCALE
50 25 0 50 100
HORIZ.
5 0 5 10
VERT.

PROJECT REFERENCE NO.	SHEET NO.
R-3825B	UC-13AQ
DESIGNED BY:	
DRAWN BY:	
CHECKED BY:	
APPROVED BY:	
REVISED:	
NORTH CAROLINA DEPARTMENT OF TRANSPORTATION	
UTILITIES ENGINEERING SEC. PHONE:(919)707-6690 FAX:(919)250-4151	UTILITY CONSTRUCTION PLANS ONLY

NORTH CAROLINA PROFESSIONAL SEAL 042200 ENGINEER TIMOTHY J. REID
Timothy J. Reid
8/14/2018 1:43:20 PM EDT

UTILITY CONSTRUCTION

NAD 83

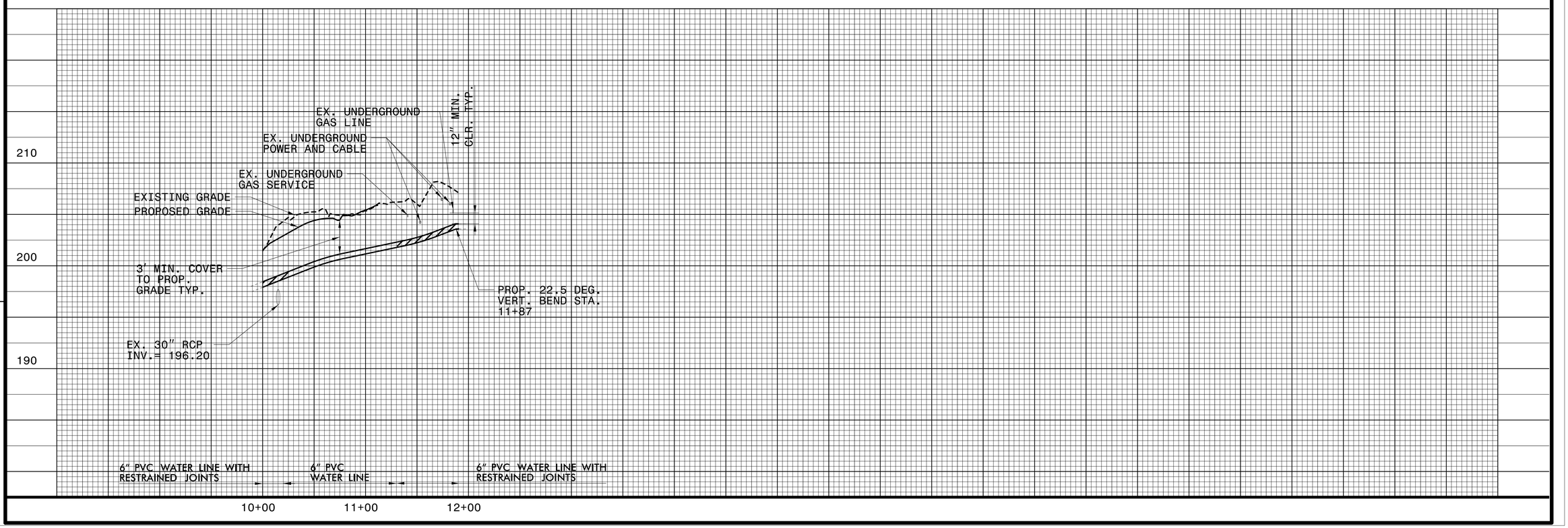

DocuSign Envelope ID: DD6697F0-5756-45D6-A4E1-3EC64FEB6390

8/17/99

REVISIONS

NOTE:
THE ESTIMATED QUANTITY OF DUCTILE IRON SEWER PIPE FITTINGS ON THIS PLAN SHEET IS 1800 POUNDS. THE ACTUAL QUANTITY AND TYPE OF FITTINGS WILL VARY BASED ON FIELD CONDITIONS.

Dewberry
2730 WYCLIFF ROAD
SUITE 101
RALEIGH, NC 27607
PHONE: 919.881.9939
NC COA No. F-0929

GRAPHIC SCALE
50 25 0 50 100
HORIZ.
5 0 5 10
VERT.

PROJECT REFERENCE NO.	SHEET NO.
R-3825B	UC-14Q
DESIGNED BY:	
DRAWN BY:	
CHECKED BY:	
APPROVED BY:	
REVISED:	
NORTH CAROLINA DEPARTMENT OF TRANSPORTATION	
UTILITIES ENGINEERING SEC. PHONE:(919)707-6690 FAX:(919)250-4151	8/14/2018 1:43:20 PM EDT UTILITY CONSTRUCTION PLANS ONLY

NORTH CAROLINA PROFESSIONAL SEAL 046000 ENGINEER Timothy J. Rabideau

UTILITY CONSTRUCTION

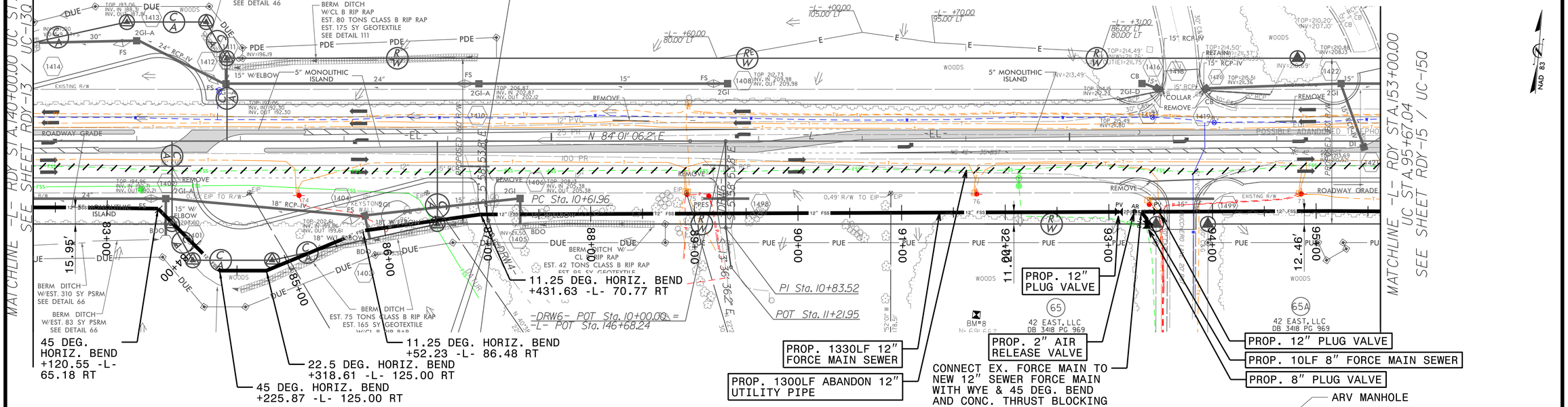

DocuSign Envelope ID: DD6697F0-5756-45D6-A4E1-3EC64FEB6390

REVISIONS

8/17/99

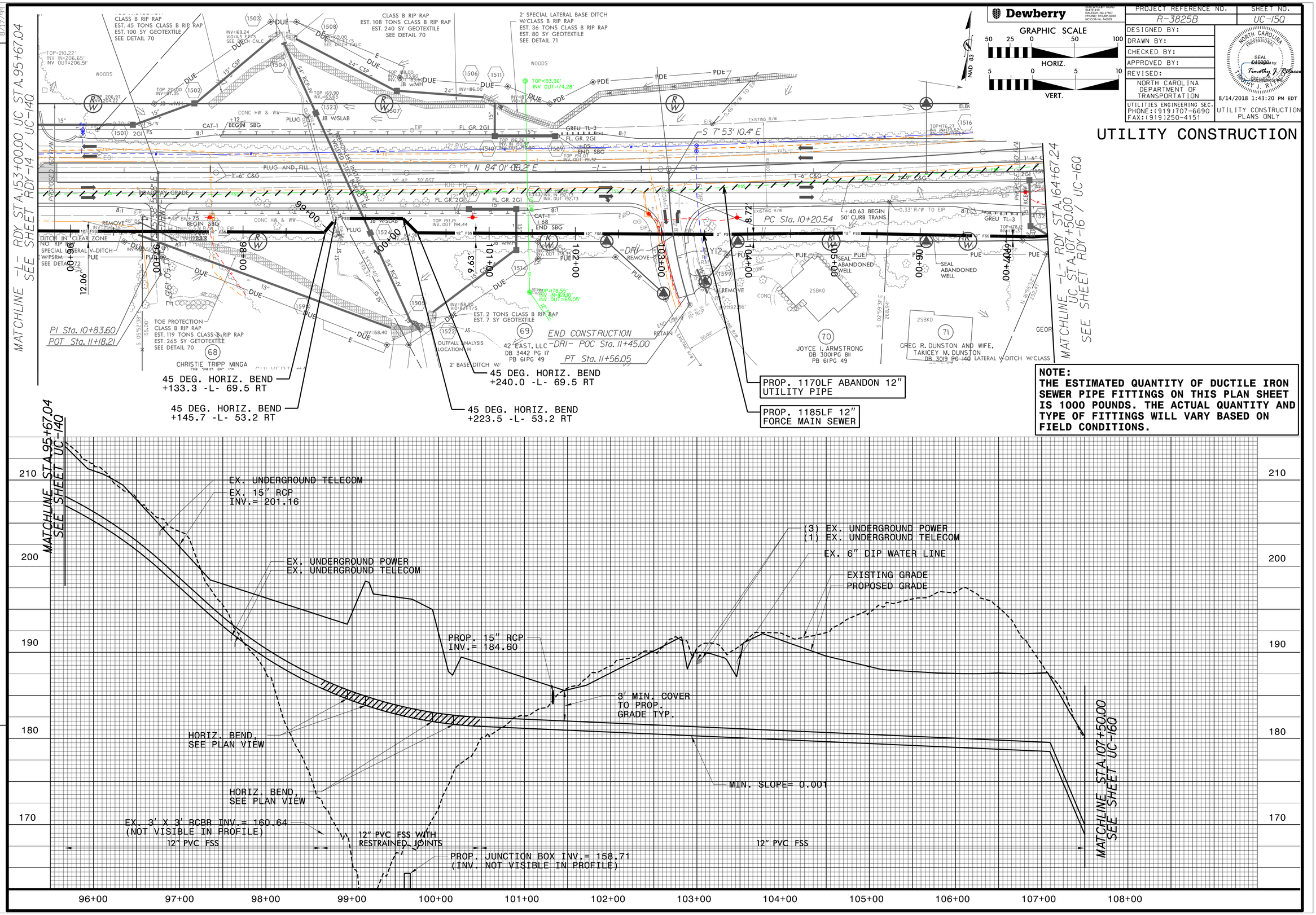

NOTE:
THE ESTIMATED QUANTITY OF DUCTILE IRON SEWER PIPE FITTINGS ON THIS PLAN SHEET IS 1000 POUNDS. THE ACTUAL QUANTITY AND TYPE OF FITTINGS WILL VARY BASED ON FIELD CONDITIONS.

Dewberry
2101 WAKE FOREST ROAD
SUITE 110
RALEIGH, NC 27607
PHONE: 919.881.9939
NC COA No. F-0929

GRAPHIC SCALE
HORIZ. 50 25 0 50 100
VERT. 5 0 5 10

PROJECT REFERENCE NO.	SHEET NO.
R-3825B	UC-15Q

DESIGNED BY:
DRAWN BY:
CHECKED BY:
APPROVED BY:
REVISED:

NORTH CAROLINA DEPARTMENT OF TRANSPORTATION
UTILITIES ENGINEERING SEC.
PHONE:(919)707-6690
FAX:(919)250-4151

NORTH CAROLINA PROFESSIONAL SEAL 045800 ENGINEER TIMOTHY J. REECE
SEALED by: Timothy J. Reece
8/14/2018 1:43:20 PM EDT
UTILITY CONSTRUCTION PLANS ONLY

UTILITY CONSTRUCTION

DocuSign Envelope ID: DD6697F0-5756-45D6-A4E1-3EC64FEB6390

8/17/99

REVISIONS

NOTE:
THE ESTIMATED QUANTITY OF DUCTILE IRON SEWER PIPE FITTINGS ON THIS PLAN SHEET IS 500 POUNDS. THE ACTUAL QUANTITY AND TYPE OF FITTINGS WILL VARY BASED ON FIELD CONDITIONS.

Dewberry
2609 WALTER HOGG ROAD
SUITE 45
WINTERVILLE, NC 27807
PHONE: 919.881.9939
NC COA No. F-0929

GRAPHIC SCALE
50 25 0 50 100
HORIZ.
5 0 5 10
VERT.

PROJECT REFERENCE NO.	SHEET NO.
R-3825B	UC-16Q
DESIGNED BY:	
DRAWN BY:	
CHECKED BY:	
APPROVED BY:	
REVISED:	
NORTH CAROLINA DEPARTMENT OF TRANSPORTATION	
UTILITIES ENGINEERING SEC. PHONE:(919)707-6690 FAX:(919)250-4151	UTILITY CONSTRUCTION PLANS ONLY

NORTH CAROLINA PROFESSIONAL SEAL 040000 SIGNATURE
DocuSigned by: Timothy J. Rebisco
TIMOTHY J. REBISCO
8/14/2018 1:43:20 PM EDT

UTILITY CONSTRUCTION

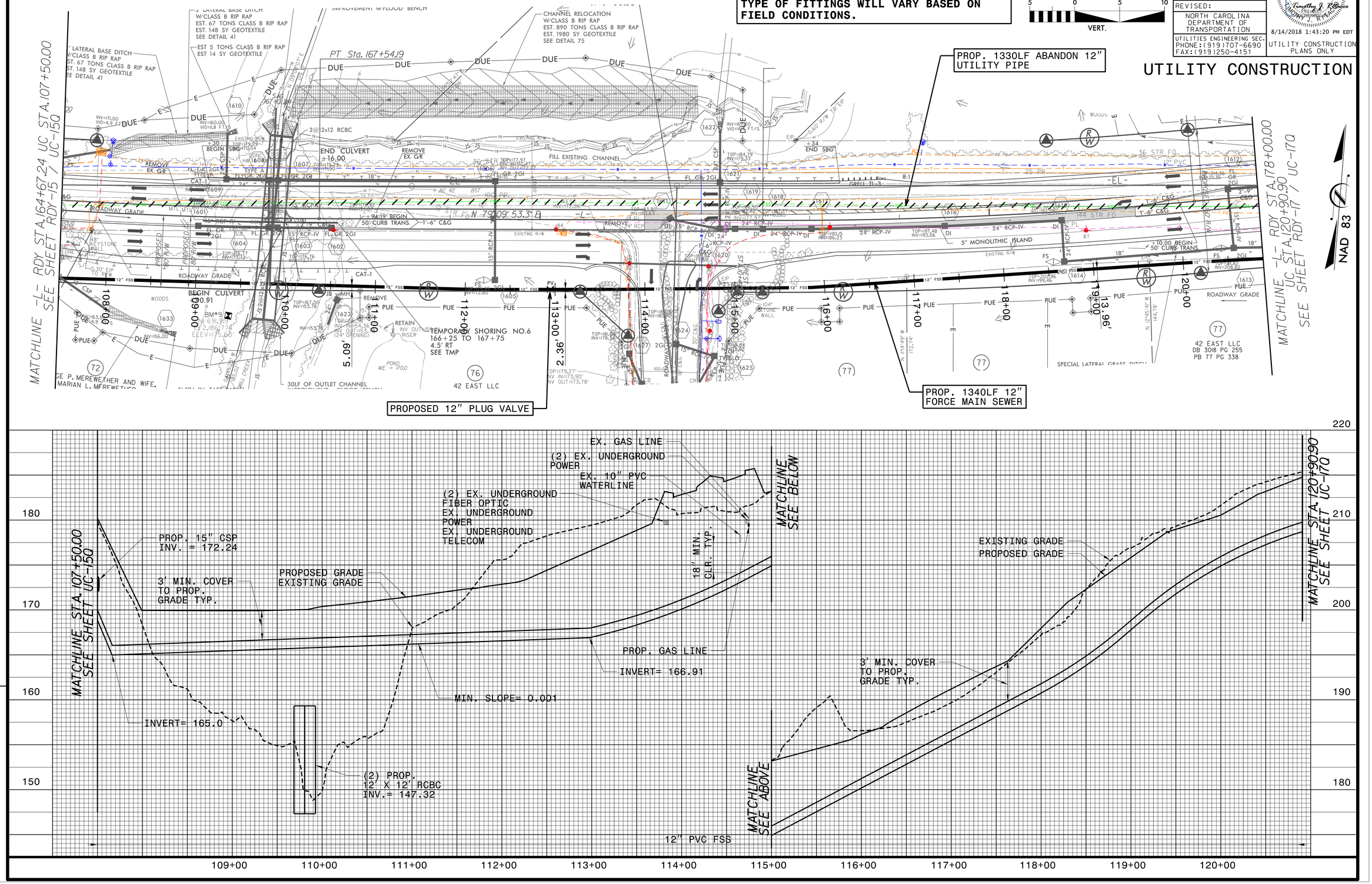

DocuSign Envelope ID: DD6697F0-5756-45D6-A4E1-3EC64FEB6390

8/17/99

REVISIONS

NOTE:
THE ESTIMATED QUANTITY OF DUCTILE IRON SEWER PIPE FITTINGS ON THIS PLAN SHEET IS 500 POUNDS. THE ACTUAL QUANTITY AND TYPE OF FITTINGS WILL VARY BASED ON FIELD CONDITIONS.

Dewberry
2079 WAKE FOREST ROAD
SUITE 101
RALEIGH, NC 27607
PHONE: 919.881.9939
NC COA No. F-0929

GRAPHIC SCALE
50 25 0 50 100
HORIZ.
5 0 5 10
VERT.

PROJECT REFERENCE NO.	SHEET NO.
R-3825B	UC-17Q
DESIGNED BY:	
DRAWN BY:	
CHECKED BY:	
APPROVED BY:	
REVISED:	
NORTH CAROLINA DEPARTMENT OF TRANSPORTATION	NORTH CAROLINA PROFESSIONAL SEAL 046000 ENGINEER TIMOTHY J. REAMES
UTILITIES ENGINEERING SEC. PHONE:(919)707-6690 FAX:(919)250-4151	8/14/2018 1:43:20 PM EDT UTILITY CONSTRUCTION PLANS ONLY

UTILITY CONSTRUCTION

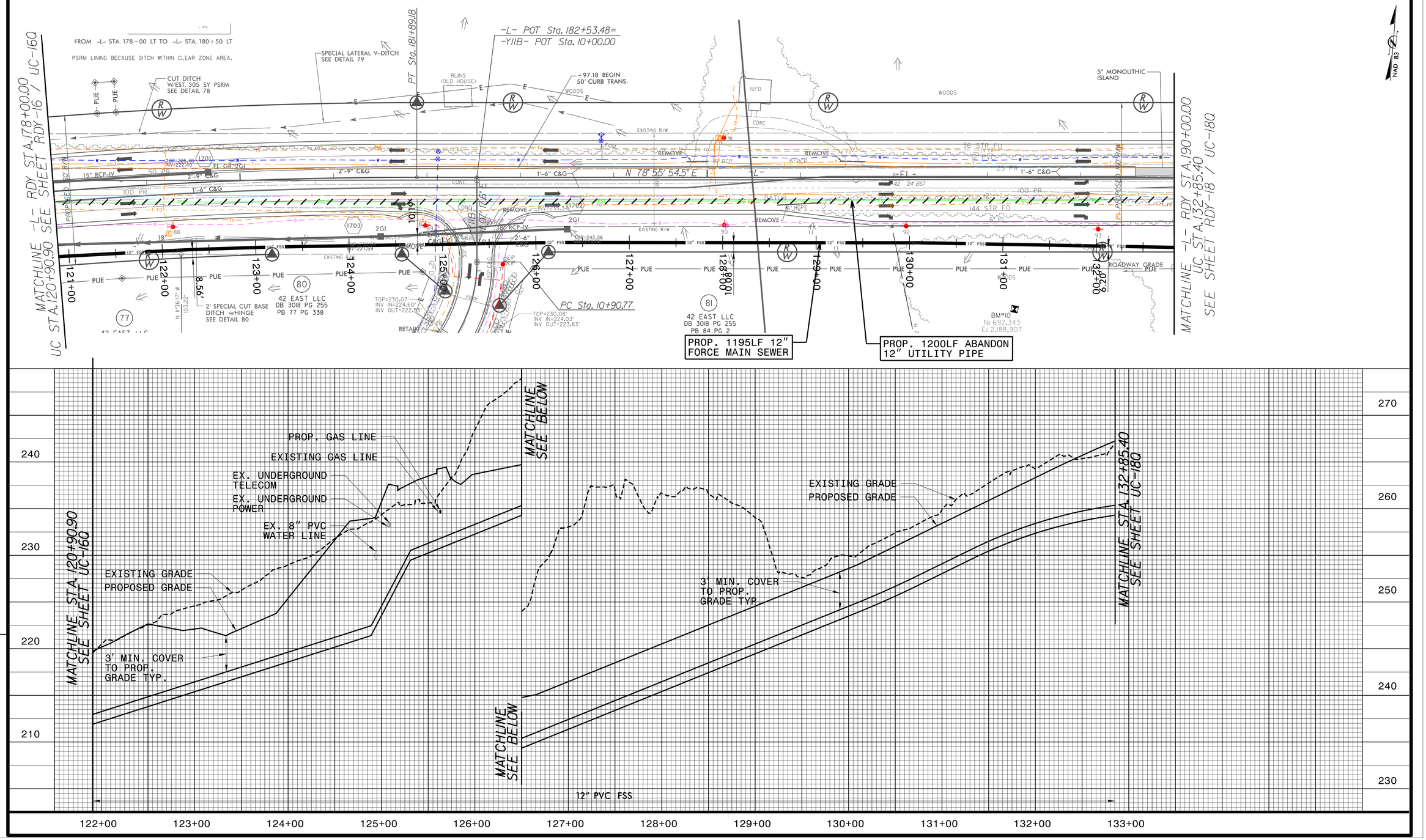

DocuSign Envelope ID: DD6697F0-5756-45D6-A4E1-3EC64FEB6390

8/17/99

REVISIONS

NOTE:
THE ESTIMATED QUANTITY OF DUCTILE IRON SEWER PIPE FITTINGS ON THIS PLAN SHEET IS 1800 POUNDS. THE ACTUAL QUANTITY AND TYPE OF FITTINGS WILL VARY BASED ON FIELD CONDITIONS.

Dewberry
8401 ARLIGTON BLVD.
SUITE 100
FAIRFAX, NC 22607
PHONE: 919.881.9939
NC COA No. F-0929

GRAPHIC SCALE
50 25 0 50 100
HORIZ.
5 0 5 10
VERT.

PROJECT REFERENCE NO.	SHEET NO.
R-3825B UC-18	UC-18Q
DESIGNED BY:	
DRAWN BY:	
CHECKED BY:	
APPROVED BY:	
REVISED:	
NORTH CAROLINA DEPARTMENT OF TRANSPORTATION	
UTILITIES ENGINEERING SEC. PHONE:(919)707-6690 FAX:(919)250-4151	8/14/2018 1:43:20 PM EDT UTILITY CONSTRUCTION PLANS ONLY

NORTH CAROLINA PROFESSIONAL SEAL 040000 ENGINEER Timothy J. Rabenau

UTILITY CONSTRUCTION

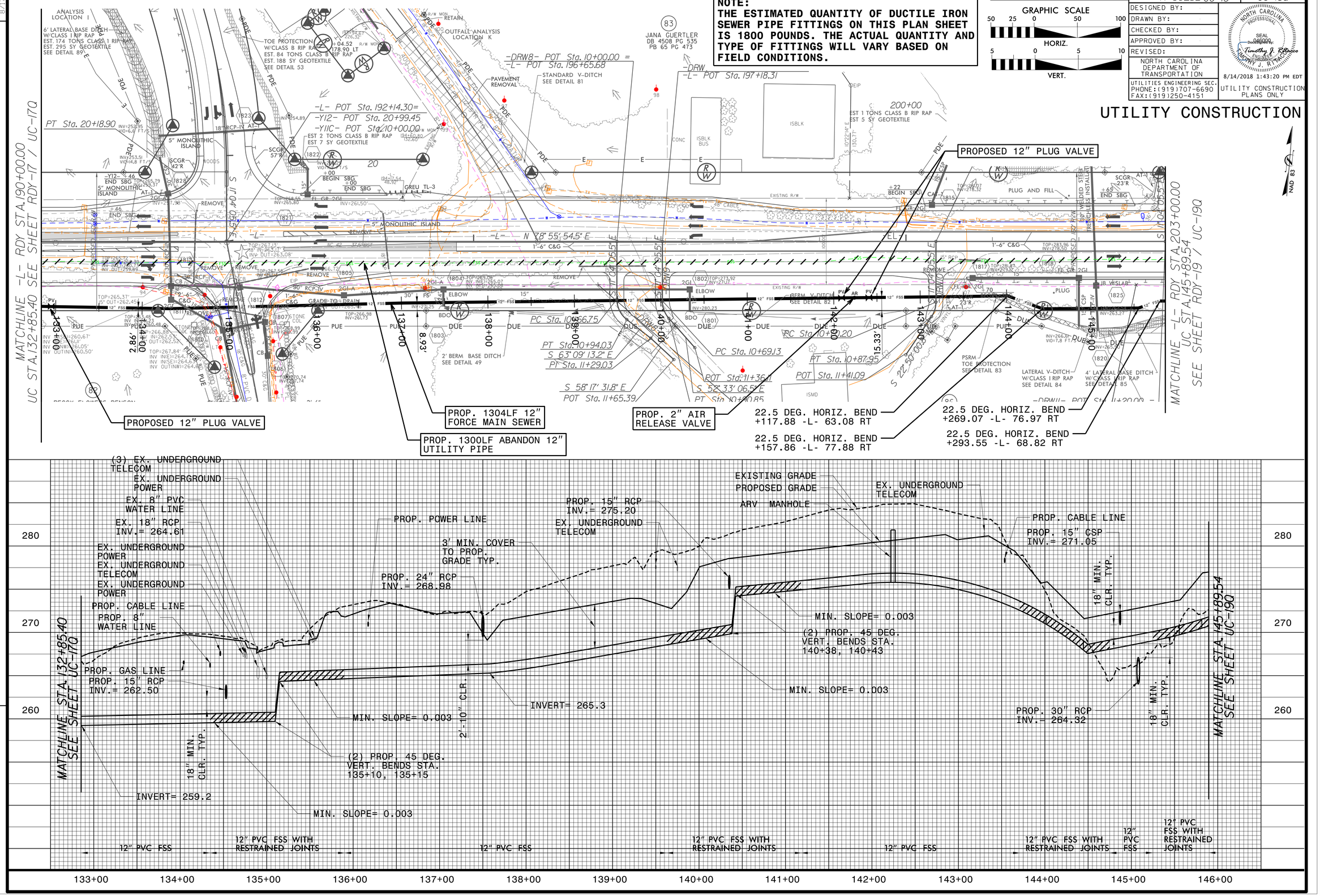

DocuSign Envelope ID: DD6697F0-5756-45D6-A4E1-3EC64FEB6390

8/17/99

REVISIONS

Dewberry
2079 WEST MALL STREET, SUITE 5
DURHAM, NC 27707
PHONE: 919.881.9939
NC COA No. F-0929

GRAPHIC SCALE
50 25 0 50 100
HORIZ.
5 0 5 10
VERT.

PROJECT REFERENCE NO.	SHEET NO.
R-3825B	UC-19Q
DESIGNED BY:	
DRAWN BY:	
CHECKED BY:	
APPROVED BY:	
REVISED:	
NORTH CAROLINA DEPARTMENT OF TRANSPORTATION	
UTILITIES ENGINEERING SEC. PHONE:(919)707-6690 FAX:(919)250-4151	8/14/2018 1:43:20 PM EDT UTILITY CONSTRUCTION PLANS ONLY

NORTH CAROLINA PROFESSIONAL SEAL 048000 ENGINEER TIMOTHY J. RITCHESON

UTILITY CONSTRUCTION

NOTE:
THE ESTIMATED QUANTITY OF DUCTILE IRON SEWER PIPE FITTINGS ON THIS PLAN SHEET IS 500 POUNDS. THE ACTUAL QUANTITY AND TYPE OF FITTINGS WILL VARY BASED ON FIELD CONDITIONS.

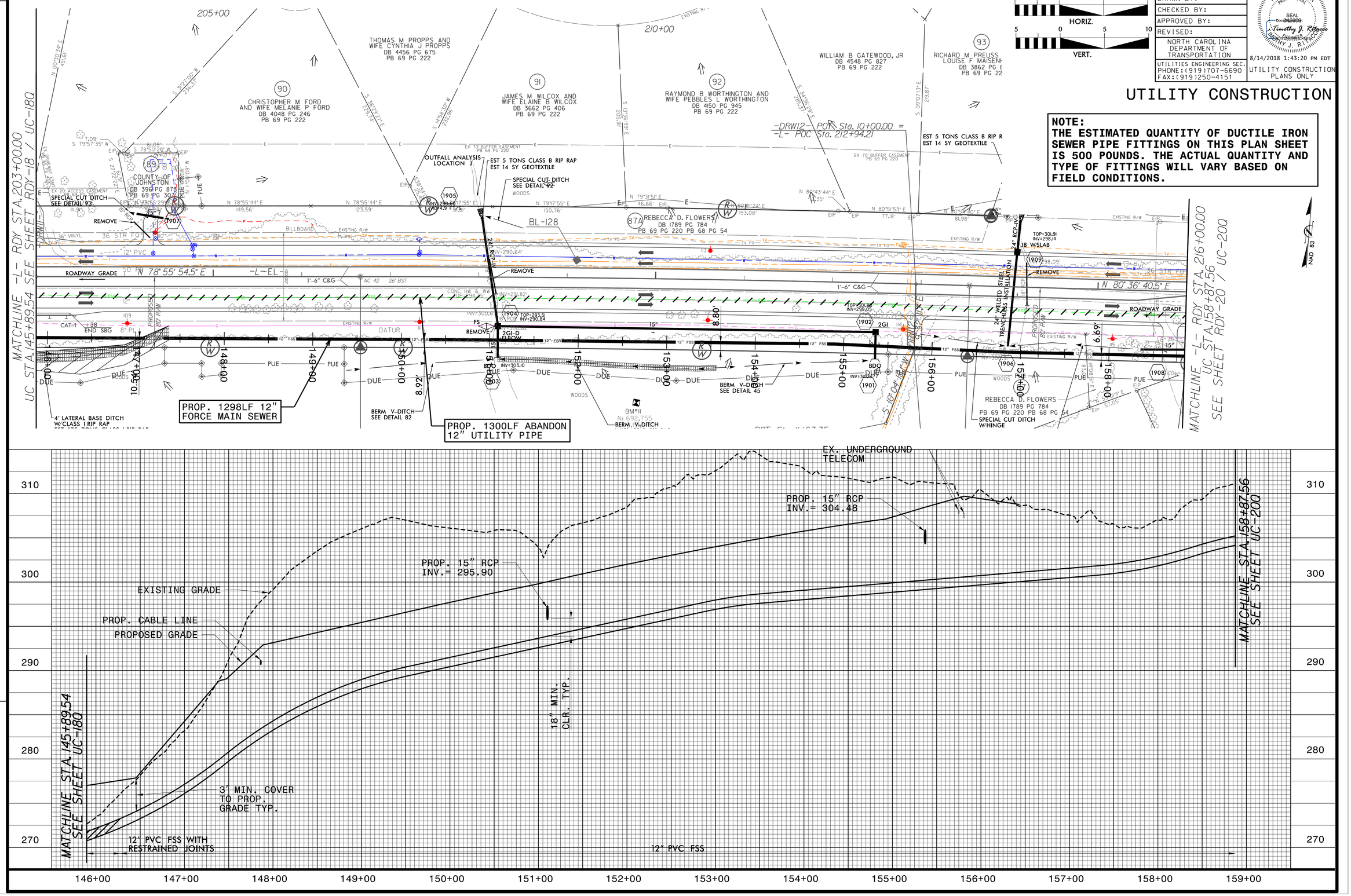

DocuSign Envelope ID: DD6697F0-5756-45D6-A4E1-3EC64FEB6390

8/17/99

REVISIONS

PROP. 2 EA 6" VALVE,
PROP. 10LF 12" WATER LINE,
PROP. 20LF 6" WATER LINE

REFER TO DETAIL ON SHEET UC-3DQ FOR CONNECTION METHOD TO JOHNSTON CO. 24" WATER MAIN

NOTE:
THE ESTIMATED QUANTITY OF DUCTILE IRON WATER PIPE FITTINGS ON THIS PLAN SHEET IS 1500 POUNDS. THE ACTUAL QUANTITY AND TYPE OF FITTINGS WILL VARY BASED ON FIELD CONDITIONS.

NOTE:
THE ESTIMATED QUANTITY OF DUCTILE IRON SEWER PIPE FITTINGS ON THIS PLAN SHEET IS 500 POUNDS. THE ACTUAL QUANTITY AND TYPE OF FITTINGS WILL VARY BASED ON FIELD CONDITIONS.

Dewberry
2609 WALNUT HILL ROAD
SUITE 10
RALEIGH, NC 27607
PHONE: 919.881.9939
NC COA No. F-0929

GRAPHIC SCALE
50 25 0 50 100
HORIZ.
5 0 5 10
VERT.

PROJECT REFERENCE NO.	SHEET NO.
R-3825B	UC-20Q

DESIGNED BY:
DRAWN BY:
CHECKED BY:
APPROVED BY:
REVISED:

NORTH CAROLINA DEPARTMENT OF TRANSPORTATION
UTILITIES ENGINEERING SEC.
PHONE:(919)707-6690
FAX:(919)250-4151

NORTH CAROLINA PROFESSIONAL SEAL 040000 ENGINEER Timothy J. Rasco
8/14/2018 1:43:20 PM EDT

UTILITY CONSTRUCTION PLANS ONLY

UTILITY CONSTRUCTION

NAD 83

MATCHLINE -L- RDY STA.216+00.00
UC STA.158+87.56 SEE SHEET RDY-19 / UC-19Q

MATCHLINE -L- RDY STA.229+00.00
UC STA.171+87.51 SEE SHEET RDY-21 / UC-21Q

BEGIN CONSTRUCTION
-Y12A- POC Sta. 12+25.00

PROP. 12" PLUG VALVE

PROP. 1300LF ABANDON 12" UTILITY PIPE

PROP. 2" AIR RELEASE VALVE

PROP. 1300LF 12" FORCE MAIN SEWER

-L- POT Sta. 221+60.97=
-Y12A- POT Sta. 13+31.89
-DRW27- POT Sta. 11+25.00

POT Sta. 10+00.00

PC Sta. 10+52.82

-DRW13-
PI Sta 10+70.41
L = 31.82'
R = 30.00'

EST. 3 TONS CLASS B RIP RAP
EST. 10 SY GEOTEXTILE

OUTFALL ANALYSIS LOCATION N

2' LATERAL BASE DITCH W/CLASS B RIP RAP
EST. 18 TONS CLASS B RIP RAP
EST. 42 SY GEOTEXTILE
SEE DETAIL 97

FOR -L- PROFILE SE

DWF DEVELOPMENT INC
DB 3166 PG 692
PB 79 PG 472

MICHAEL A FORD
DB 4376 PG 567
PB 69 PG 220

WIFE MITZIDAVEY
DB 3882 PG 689
PB 69 PG 220

REBECCA D. FLOWERS
DB 4558 PG 869
PB 81PG 34

PEGGY ANN FLOWERS
DB 3081PG 221
PB 65 PG 346

REBECCA D FLOWERS
DB 1001PG 389

EST 1 TONS CLASS B RIP RAP
EST 5 SY GEOTEXTILE

ARV MANHOLE
PROP. WATER LINE
EX. UNDERGROUND CABLE
PROP. CABLE LINE
3' MIN. COVER TO PROP. GRADE TYP.
PROP. CABLE AND POWER LINES
18" MIN. CLR. TYP.
PROP. 18" RCP INV.= 296.75
PROP. GAS LINE
PROP. 18" RCP INV.= 289.56
INVERT= 292.5
INVERT= 290.7
12" PVC FSS

MATCHLINE STA.158+87.56 SEE SHEET UC-19Q

MATCHLINE STA.171+87.51 SEE SHEET UC-21Q

310 300 290 280 270

159+00 160+00 161+00 162+00 163+00 164+00 165+00 166+00 167+00 168+00 169+00 170+00 171+00 172+00

DocuSign Envelope ID: DD6697F0-5756-45D6-A4E1-3EC64FEB6390

RDY-21

8/17/99

REVISIONS

NOTE:
THE ESTIMATED QUANTITY OF DUCTILE IRON SEWER PIPE FITTINGS ON THIS PLAN SHEET IS 1000 POUNDS. THE ACTUAL QUANTITY AND TYPE OF FITTINGS WILL VARY BASED ON FIELD CONDITIONS.

NOTE:
THE ESTIMATED QUANTITY OF DUCTILE IRON WATER PIPE FITTINGS ON THIS PLAN SHEET IS 1500 POUNDS. THE ACTUAL QUANTITY AND TYPE OF FITTINGS WILL VARY BASED ON FIELD CONDITIONS.

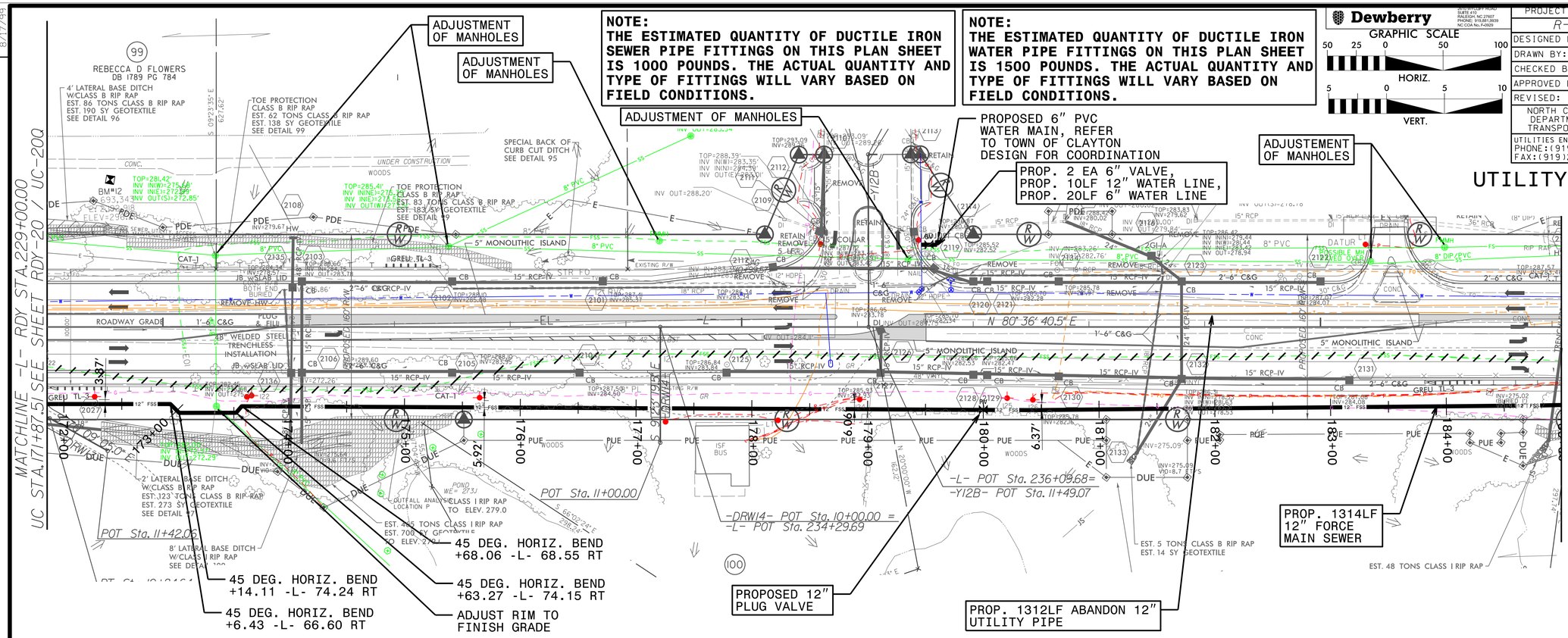

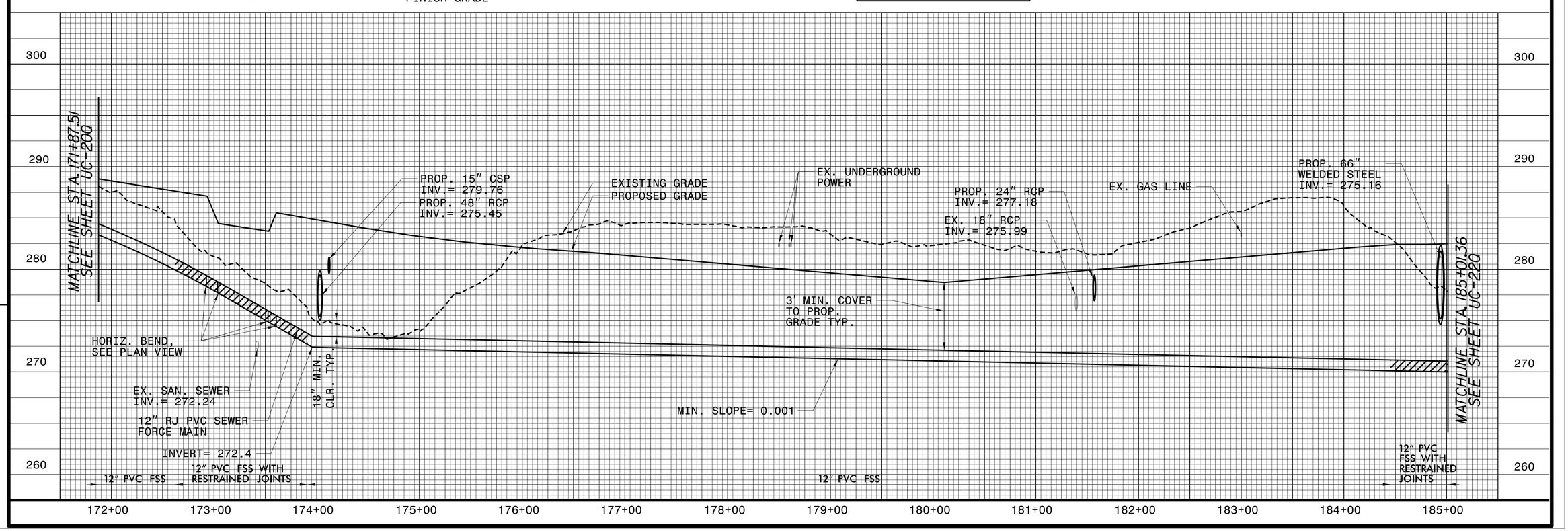

Dewberry
8401 ARLINGTON BLVD
SUITE 100
FAIRFAX, VA 22031
PHONE: 919.881.9939
NC COA No. F-0929

GRAPHIC SCALE
HORIZ. 50 25 0 50 100
VERT. 5 0 5 10

PROJECT REFERENCE NO.	SHEET NO.
R-3825B	UC-21Q

DESIGNED BY:
DRAWN BY:
CHECKED BY:
APPROVED BY:
REVISED:

NORTH CAROLINA DEPARTMENT OF TRANSPORTATION
UTILITIES ENGINEERING SEC.
PHONE:(919)707-6690
FAX:(919)250-4151

NORTH CAROLINA PROFESSIONAL SEAL 030360 ENGINEER TIMOTHY J. REBECCA
8/14/2018 1:43:20 PM EDT

UTILITY CONSTRUCTION

UTILITY CONSTRUCTION PLANS ONLY

DocuSign Envelope ID: DD6697F0-5756-45D6-A4E1-3EC64FEB6390

8/17/99

REVISIONS

NOTE:
THE ESTIMATED QUANTITY OF DUCTILE IRON SEWER PIPE FITTINGS ON THIS PLAN SHEET IS 1800 POUNDS. THE ACTUAL QUANTITY AND TYPE OF FITTINGS WILL VARY BASED ON FIELD CONDITIONS.

NOTE:
PRIOR TO COMMENCING ANY WORK ON ANY TRENCHLESS INSTALLATION ON THIS PROJECT, PROVIDE A DESIGN FOR THE TRENCHLESS INSTALLATION CERTIFIED BY AN ENGINEER LICENSED BY THE STATE OF NORTH CAROLINA, AS REQUIRED BY SUBARTICLE 1550-3(B) OF THE STANDARD SPECIFICATIONS.

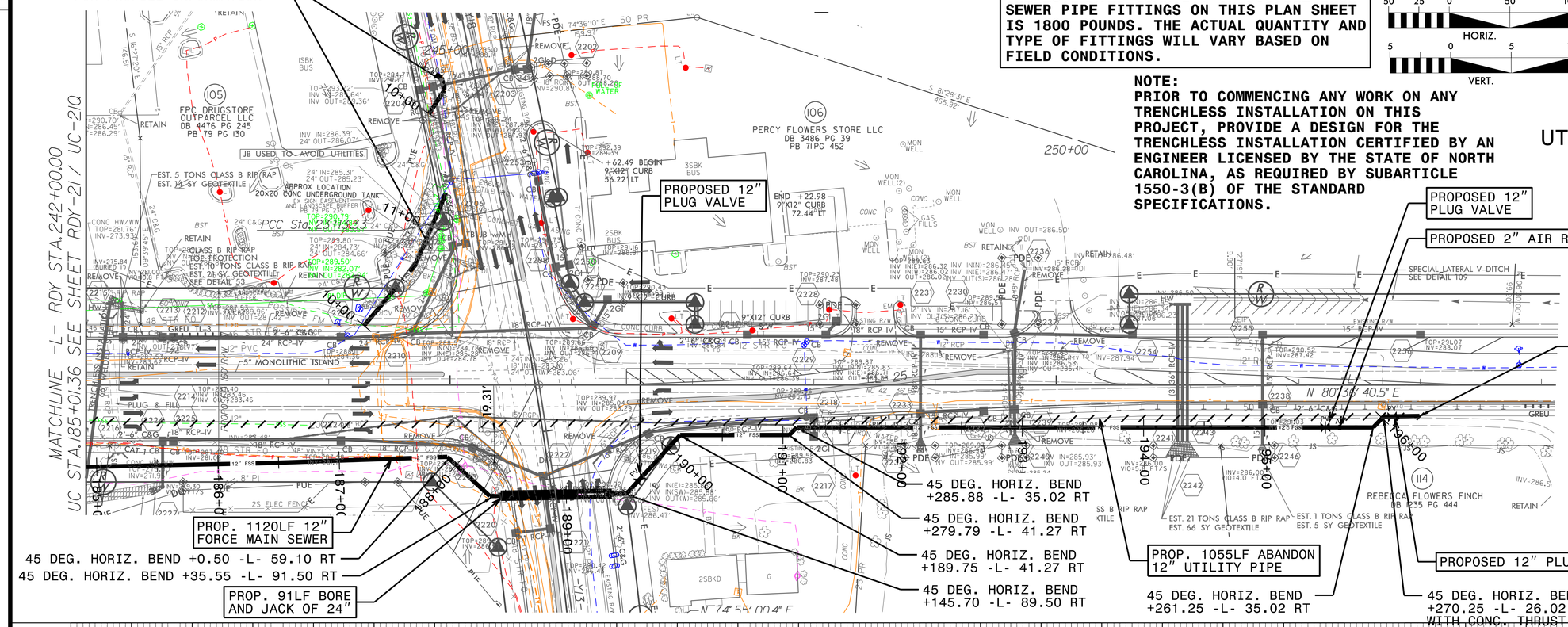

Dewberry
8401 ARLIVIA PARK DRIVE
RALEIGH, NC 27607
PHONE: 919.881.9939
NC COA No. F-0929

GRAPHIC SCALE
50 25 0 50 100
HORIZ.
5 0 5 10
VERT.

PROJECT REFERENCE NO.	SHEET NO.
R-3825B	UC-22Q

DESIGNED BY:
DRAWN BY:
CHECKED BY:
APPROVED BY:
REVISED:

NORTH CAROLINA DEPARTMENT OF TRANSPORTATION
UTILITIES ENGINEERING SEC.
PHONE:(919)707-6690
FAX:(919)250-4151

NORTH CAROLINA PROFESSIONAL SEAL 040690 Timothy J. Rivenbark ENGINEER TIMOTHY J. RIVENBARK
8/14/2018 1:43:20 PM EDT
UTILITY CONSTRUCTION PLANS ONLY

UTILITY CONSTRUCTION

DocuSign Envelope ID: DD6697F0-5756-45D6-A4E1-3EC64FEB6390

8/17/99

REVISIONS

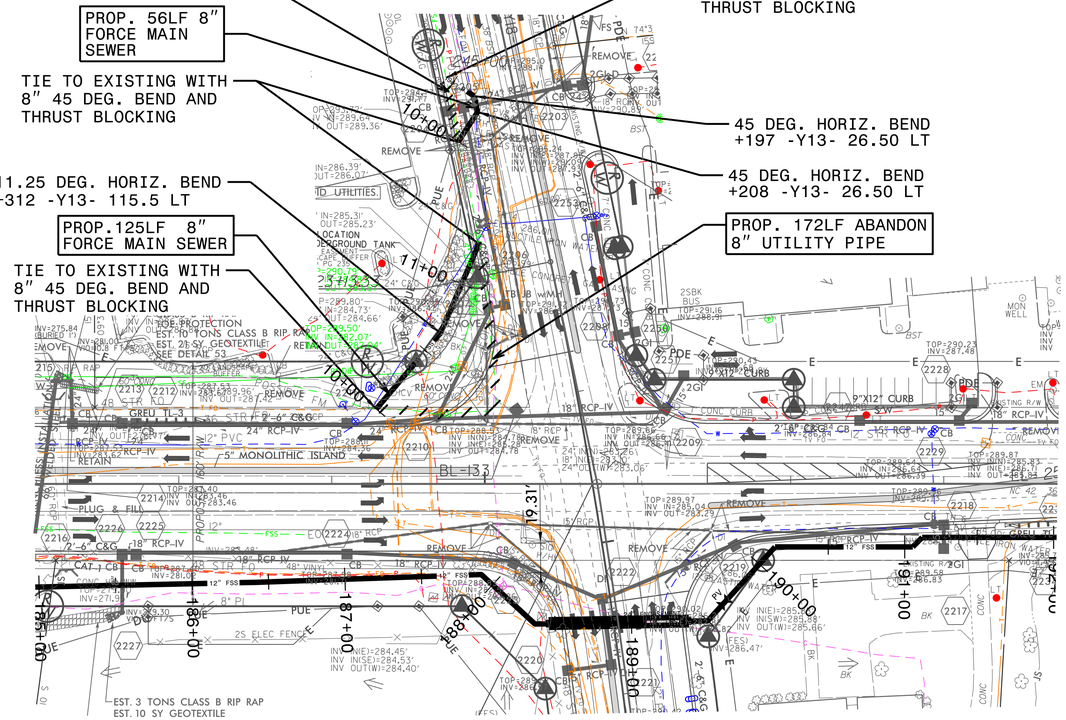

Dewberry
ALL SURVEYING WORK
SUITE 100
RALEIGH, NC 27607
PHONE: 919.881.9939
NC COA No. F-0929

GRAPHIC SCALE
50 25 0 50 100
HORIZ.
5 0 5 10
VERT.

PROJECT REFERENCE NO.	SHEET NO.
R-3825B	UC-22AQ

DESIGNED BY:
DRAWN BY:
CHECKED BY:
APPROVED BY:
REVISED:

NORTH CAROLINA DEPARTMENT OF TRANSPORTATION

UTILITIES ENGINEERING SEC.
PHONE:(919)707-6690
FAX:(919)250-4151

NORTH CAROLINA PROFESSIONAL SEAL 036000 ENGINEER Timothy J. Rennie
8/14/2018 1:43:20 PM EDT

UTILITY CONSTRUCTION PLANS ONLY

UTILITY CONSTRUCTION

NAD 83
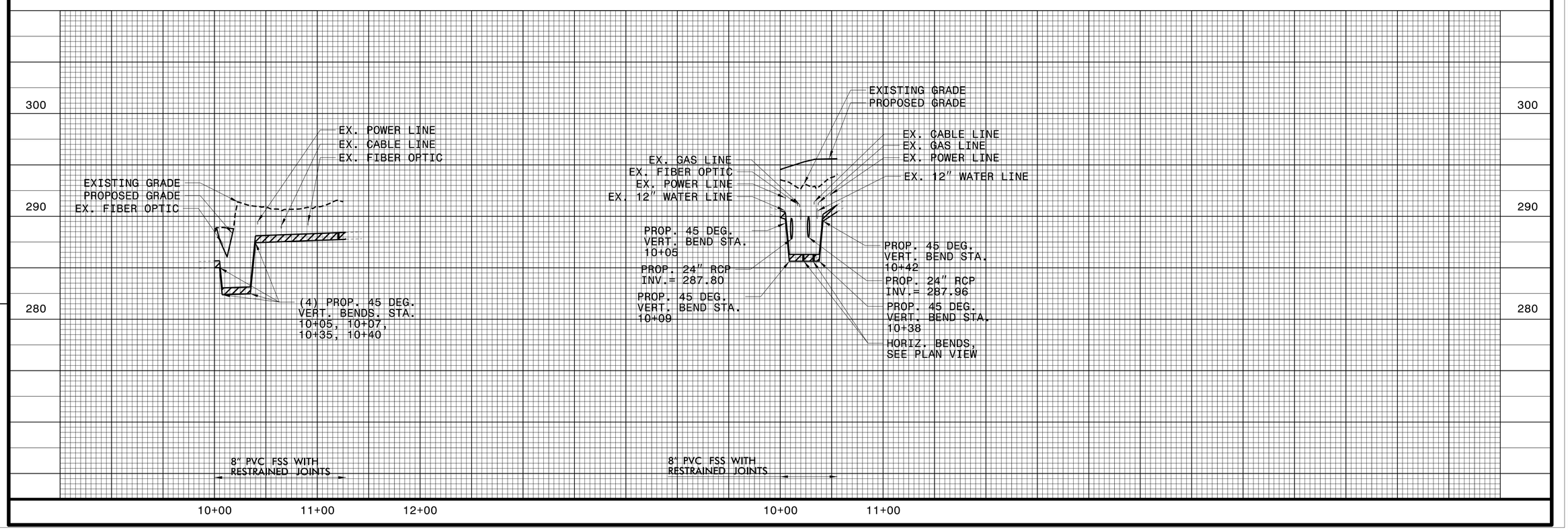
NOTE:
THE ESTIMATED QUANTITY OF DUCTILE IRON SEWER PIPE FITTINGS ON THIS PLAN SHEET IS 2500 POUNDS. THE ACTUAL QUANTITY AND TYPE OF FITTINGS WILL VARY BASED ON FIELD CONDITIONS.