This electronic collection of documents is provided for the convenience of the user and is Not a Certified Document –

The documents contained herein were originally issued and sealed by the individuals whose names and license numbers appear on each page, on the dates appearing with their signature on that page.
This file or an individual page shall not be considered a certified document.

DocuSign Envelope ID: 794DC4F2-D17B-499C-9A8F-D82865F30E58

Project: R-3825B

Project No.	Sheet No.
R-3825B	Sig. 1.0

STATE OF NORTH CAROLINA
DIVISION OF HIGHWAYS

JOHNSTON COUNTY

LOCATION: NC 42 FROM SR 1902 (GLEN LAUREL RD) TO SR 1003 (BUFFALO RD)

TYPE OF WORK: TRAFFIC SIGNALS AND COMMUNICATIONS CABLE

Vicinity Map

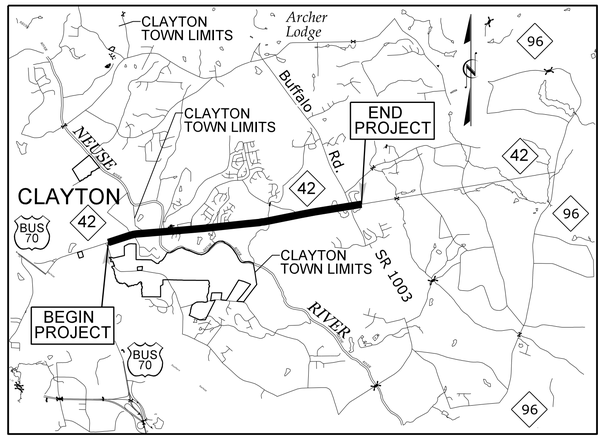

NOT TO SCALE

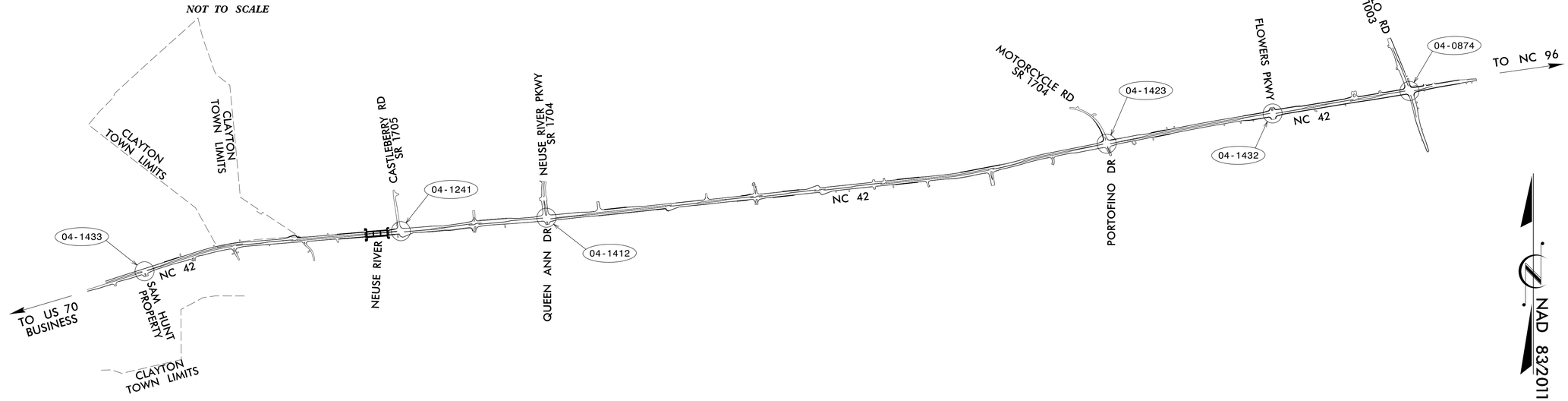

Index of Plans

Sheet #	Reference #	Location/Description
Sig. 1.0	N/A	Title Sheet
Sig. 2.0–2.2	04–1433	NC 42 at Sam Hunt Property
Sig. 3.0–3.1	04–1241T1	NC 42 at SR 1705 (Castleberry Road), Temporary Design 1
Sig. 4.0–4.1	04–1241T2	NC 42 at SR 1705 (Castleberry Road), Temporary Design 2
Sig. 5.0–5.3	04–1241	NC 42 at SR 1705 (Castleberry Road), Final Design
Sig. 6.0–6.2	04–1412T1	NC 42 at SR 1704 (Neuse River Parkway) /Queen Ann Drive, Temporary Design 1
Sig. 7.0–7.2	04–1412T2	NC 42 at SR 1704 (Neuse River Parkway) /Queen Ann Drive, Temporary Design 2
Sig. 8.0–8.2	04–1412T3	NC 42 at SR 1704 (Neuse River Parkway) /Queen Ann Drive, Temporary Design 3
Sig. 9.0–9.1	04–1412T4	NC 42 at SR 1704 (Neuse River Parkway) /Queen Ann Drive, Temporary Design 4
Sig. 10.0–10.4	04–1412	NC 42 at SR 1704 (Neuse River Parkway) /Queen Ann Drive, Final Design
Sig. 11.0–11.1	04–1423T1	NC 42 at SR 1704 (Motorcycle Rd) /Portofino Dr, Temporary Design 1
Sig. 12.0–12.1	04–1423T2	NC 42 at SR 1704 (Motorcycle Rd) /Portofino Dr, Temporary Design 2
Sig. 13.0–13.1	04–1423T3	NC 42 at SR 1704 (Motorcycle Rd) /Portofino Dr, Temporary Design 3
Sig. 14.0–14.3	04–1423	NC 42 at SR 1704 (Motorcycle Rd) /Portofino Dr, Final Design
Sig. 15.0–15.4	04–1432	NC 42 at Flowers Parkway
Sig. 16.0–16.2	04–0874T1	NC 42 at SR 1003 (Buffalo Road), Temporary Design 1
Sig. 17.0–17.1	04–0874T2	NC 42 at SR 1003 (Buffalo Road), Temporary Design 2
Sig. 18.0–18.4	04–0874	NC 42 at SR 1003 (Buffalo Road), Final Design
Sig. M1–M8	N/A	Metal Pole Standard Drawings
SCP–1	N/A	ITS Legend
SCP–2–20	N/A	Communications Cable and Conduit Routing Plans
SCP–21–26	N/A	Splice Details

Prepared by
URS
URS Corporation – North Carolina
1600 Perimeter Park Drive
Morrisville, North Carolina 27560
TELEPHONE (919) 461-1100 FAX (919) 461-1415
NC LICENSE • C-2243

Refer to "Roadway Standard Drawings NCDOT" dated January 2018 and "Standard Specifications for Roads and Structures" dated January 2018.

INTELLIGENT TRANSPORTATION AND SIGNALS UNIT

Contacts:

Zachary Little, PE – Eastern Region Signals Engineer
Keith M. Mims, PE – Signal Equipment Design Engineer
I. Neil Avery – Signal Communications Project Engineer

Prepared in the Office of:
DIVISION OF HIGHWAYS
TRANSPORTATION MOBILITY AND SAFETY DIVISION
Transportation Mobility and Safety Division
ITS and Signals Unit
750 N. Greenfield Parkway, Garner, NC 27529

8/15/2018
J:\Morrisville\Jobs\R3825B\Traffic\Signals\R3825B Title Sheet 20180525.dgn
CXS

DocuSign Envelope ID: EDEA80FB-80A3-45F4-B6C8-CD80310DC6C8

PROJECT REFERENCE NO.	SHEET NO.
R-3825B	Sig.2.0

PHASING DIAGRAM

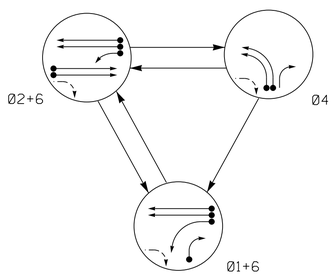

PHASING DIAGRAM DETECTION LEGEND

- DETECTED MOVEMENT
- UNDETECTED MOVEMENT (OVERLAP)
- UNSIGNALIZED MOVEMENT
- PEDESTRIAN MOVEMENT

TABLE OF OPERATION

SIGNAL FACE	PHASE 01+6	PHASE 02+6	PHASE 04	PHASE FLASH
11	←	←Y	←R	←Y
21, 22	R	G	R	Y
41, 42	←R	←R	←	←R
43	→	R	→	R
61, 62	G	G	R	Y

SIGNAL FACE I.D.

All Heads L.E.D.

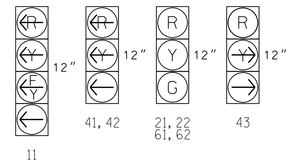

OASIS 2070 LOOP & DETECTOR INSTALLATION CHART

INDUCTIVE LOOPS					DETECTOR PROGRAMMING							
LOOP	SIZE (FT)	DISTANCE FROM STOPBAR (FT)	TURNS	NEW LOOP	PHASE	CALLING	EXTENSION	FULL TIME DELAY	STRETCH TIME	DELAY TIME	SYSTEM LOOP	NEW CARD
1A	6X40	0	2-4-2	Y	1	Y	Y	-	-	15	-	Y
					6	Y	Y	Y	-	3	-	Y
1B	6X40	0	2-4-2	Y	1	Y	Y	-	-	15	-	Y
2A	6X6	420	6	Y	2	Y	Y	-	-	-	-	Y
2B	6X6	420	6	Y	2	Y	Y	-	-	-	-	Y
4A	6X40	0	2-4-2	Y	4	Y	Y	-	-	-	-	Y
4B	6X40	0	2-4-2	Y	4	Y	Y	-	-	-	-	Y
6A	6X6	420	6	Y	6	Y	Y	-	-	-	-	Y
6B	6X6	420	6	Y	6	Y	Y	-	-	-	-	Y
S1	6X6	200	3	Y	-	-	-	-	-	-	Y	Y
S2	6X6	200	3	Y	-	-	-	-	-	-	Y	Y
S3	6X6	150	5	Y	-	-	-	-	-	-	Y	Y
S4	6X6	150	5	Y	-	-	-	-	-	-	Y	Y

3 Phase
Fully Actuated
NC 42 (East of Clayton)

NOTES

1. Refer to "Roadway Standard Drawings NCDOT" dated January 2018, "Standard Specifications for Roads and Structures" dated January 2018.
2. Do not program signal for late night flashing operation unless otherwise directed by the Engineer.
3. Phase 1 may be lagged.
4. Set all detector units to presence mode.
5. Locate new cabinet so as not to obstruct sight distance of vehicles turning right on red.
6. Maximum times shown in timing chart are for free-run operation only. Coordinated signal system timing values supersede these values.
7. Closed loop system data: Controller Asset #1433.

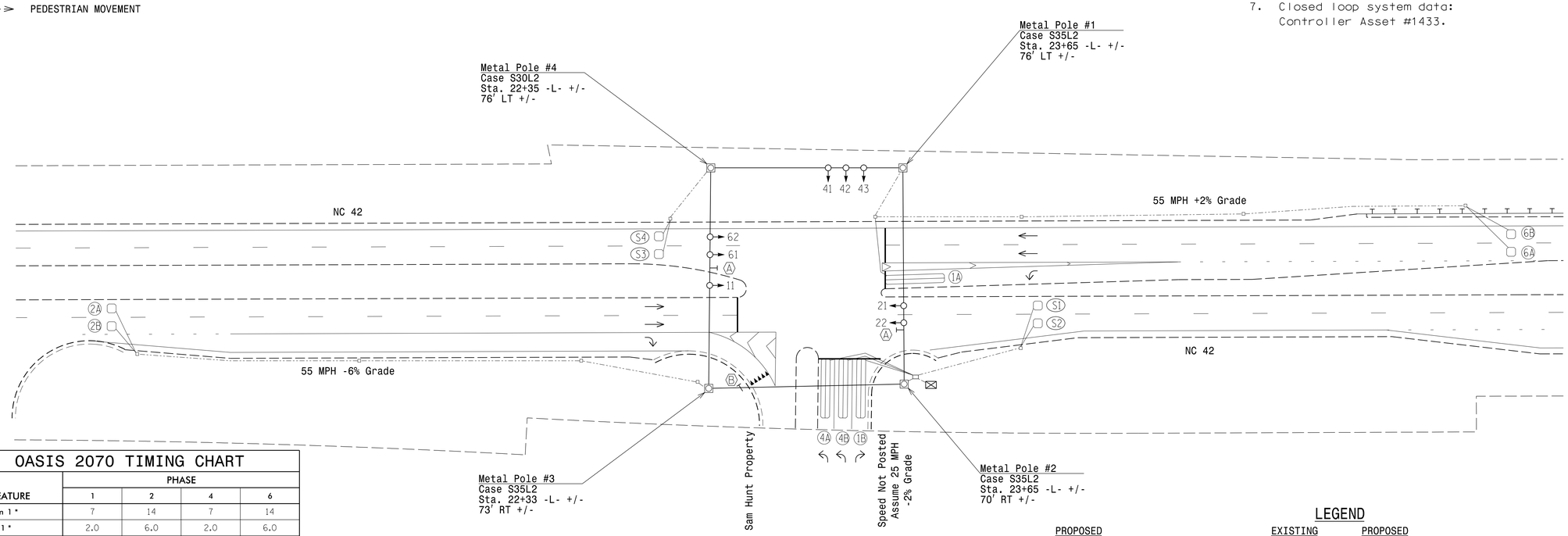

OASIS 2070 TIMING CHART

FEATURE	PHASE 1	PHASE 2	PHASE 4	PHASE 6
Min Green 1 *	7	14	7	14
Extension 1 *	2.0	6.0	2.0	6.0
Max Green 1 *	25	90	45	90
Yellow Clearance	3.0	5.9	3.0	5.9
Red Clearance	2.6	1.2	3.3	1.2
Red Revert	2.0	2.0	2.0	2.0
Walk 1 *	-	-	-	-
Don't Walk 1	-	-	-	-
Seconds Per Actuation *	-	1.8	-	1.8
Max Variable Initial *	-	46	-	46
Time Before Reduction *	-	15	-	15
Time To Reduce *	-	30	-	30
Minimum Gap	-	3.4	-	3.4
Recall Mode	-	MIN RECALL	-	MIN RECALL
Vehicle Call Memory	-	YELLOW	-	YELLOW
Dual Entry	-	-	-	-
Simultaneous Gap	ON	ON	ON	ON

* These values may be field adjusted. Do not adjust Min Green and Extension times for phases 2 and 6 lower than what is shown. Min Green for all other phases should not be lower than 4 seconds.

LEGEND

PROPOSED		EXISTING	PROPOSED		EXISTING
	Traffic Signal Head			2-in Underground Conduit	
	Metal Strain Pole		N/A	Right of Way	
	Sign			Directional Arrow	
	Inductive Loop Detector		A	Street Name Sign (D3-1)	A
	Controller & Cabinet		B	Yield Sign (R1-2)	B
	Junction Box				
	Oversized Junction Box				

New Installation

DOCUMENT NOT CONSIDERED FINAL UNLESS ALL SIGNATURES COMPLETED

Prepared by
URS
URS Corporation – North Carolina
1600 Perimeter Park Drive
Morrisville, North Carolina 27560
TELEPHONE (919) 461-1100 FAX (919) 461-1415
NC LICENSE • C-2243

Prepared for the Offices of:
Transportation Mobility and Safety Division
STATE OF NORTH CAROLINA DEPARTMENT OF TRANSPORTATION
Signal Design Section
750 N.Greenfield Pkwy,Garner,NC 27529

NC 42
at
Sam Hunt Property

Division 4 Johnston County Clayton

PLAN DATE: January 2018 REVIEWED BY: C. L. Kalencik
PREPARED BY: S. W. Cox REVIEWED BY:

SCALE 0 40 1"=40'

REVISIONS | INIT. | DATE

NORTH CAROLINA PROFESSIONAL SEAL 040715 ENGINEER COURTNEY L. KALENCIK

DocuSigned by: Courtney L. Kalencik 5/25/2018
0FE9158CE2864FE...

SIG. INVENTORY NO. 04-1433

5/25/2018
L:\Wbr\Sville\Jobs\R3825B\Traffic\Signals\04-1433_sig_dsn_date.dgn
COXSI

DocuSign Envelope ID: EDEA80FB-80A3-45F4-B6C8-CD80310DC6C8

PROJECT REFERENCE NO.	SHEET NO.
R-3825B	Sig. 2.1

EDI MODEL 2018ECL-NC CONFLICT MONITOR PROGRAMMING DETAIL

(remove jumpers and set switches as shown)

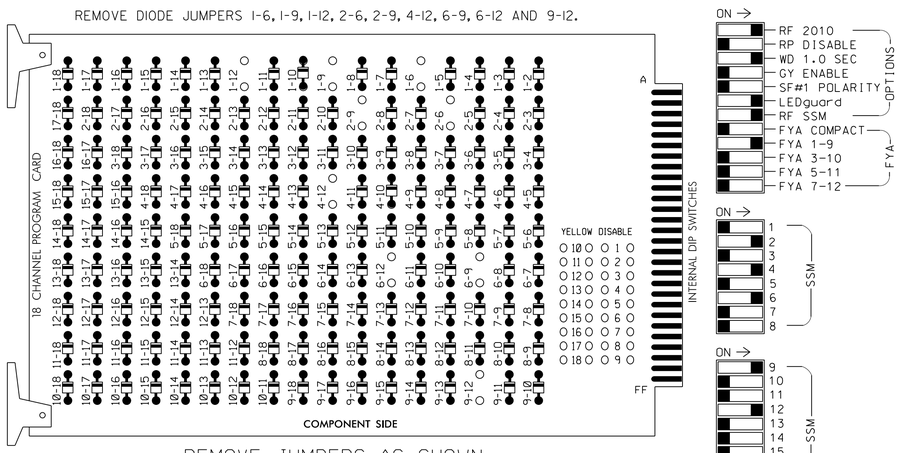

REMOVE JUMPERS AS SHOWN

NOTES:

1. Card is provided with all diode jumpers in place. Removal of any jumper allows its channels to run concurrently.
2. Ensure jumpers SEL2-SEL5 and SEL9 are present on the monitor board.
3. Ensure that Red Enable is active at all times during normal operation.
4. Connect serial cable from conflict monitor to comm. port 1 of 2070 controller. Ensure conflict monitor communicates with 2070.

NOTES

1. To prevent "flash-conflict" problems, insert red flash program blocks for all unused vehicle load switches in the output file. The installer shall verify that signal heads flash in accordance with the Signal Plans.
2. Enable Simultaneous Gap-Out for all phases.
3. Program phases 2 and 6 for Variable Initial and Gap Reduction.
4. Program phases 2 and 6 for Start Up In Green.
5. Program phases 2 and 6 for Yellow Flash and overlap 1 as Wag Overlaps.
6. The cabinet and controller are part of the NC 42 (East of Clayton) Closed Loop System.

EQUIPMENT INFORMATION

CONTROLLER.....2070
CABINET.....332 W/ AUX
SOFTWARE.....ECONOLITE OASIS
CABINET MOUNT.....BASE
OUTPUT FILE POSITIONS...18 WITH AUX. OUTPUT FILE
LOAD SWITCHES USED.....S1,S2,S5,S8,AUX S1, AUX S5
PHASES USED.....1,2,4,6
OVERLAP "A".....1+2
OVERLAP "B".....NOT USED
OVERLAP "C".....NOT USED
OVERLAP "D".....1+4

SIGNAL HEAD HOOK-UP CHART

LOAD SWITCH NO.	S1	S2	S3	S4	S5	S6	S7	S8	S9	S10	S11	S12	AUX S1	AUX S2	AUX S3	AUX S4	AUX S5	AUX S6
CMU CHANNEL NO.	1	2	13	3	4	14	5	6	15	7	8	16	9	10	17	11	12	18
PHASE	1	2	2 PED	3	4	4 PED	5	6	6 PED	7	8	8 PED	OLA	OLB	SPARE	OLC	OLD	SPARE
SIGNAL HEAD NO.	11 ★	21,22	NU	NU	41,42	NU	NU	61,62	NU	NU	NU	NU	11 ★	NU	NU	NU	43	NU
RED		128						134									A101	
YELLOW	✳	129						135										
GREEN		130						136										
RED ARROW					101								A121					
YELLOW ARROW					102								A122				A102	
FLASHING YELLOW ARROW													A123					
GREEN ARROW	127				103												A103	

NU = Not Used

✳ Denotes install load resistor. See load resistor installation detail this sheet.

★ See pictorial of head wiring in detail below.

FYA SIGNAL WIRING DETAIL

(wire signal head as shown)

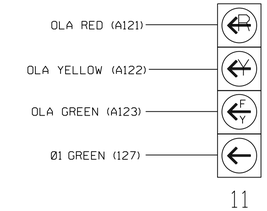

NOTE

The sequence display for signal head 11 requires special logic programming. See sheet 2 for programming instructions.

INPUT FILE POSITION LAYOUT

(front view)

		1	2	3	4	5	6	7	8	9	10	11	12	13	14
FILE "I"	U	Ø 1 1A	Ø 2 2A	SLOT EMPTY	SLOT EMPTY	SLOT EMPTY	Ø 4 4A	Ø 1 1B	SLOT EMPTY	SYS. DET. S1	SLOT EMPTY	SLOT EMPTY	SLOT EMPTY	SLOT EMPTY	FS DC ISOLATOR
	L	NOT USED	Ø 2 2B				Ø 4 4B	NOT USED		SYS. DET. S2					ST DC ISOLATOR
FILE "J"	U	SLOT EMPTY	Ø 6 6A	SLOT EMPTY	WIRED INPUT ⊗	SLOT EMPTY	SLOT EMPTY	SLOT EMPTY	SLOT EMPTY	SYS. DET. S3	SLOT EMPTY	SLOT EMPTY	SLOT EMPTY	SLOT EMPTY	SLOT EMPTY
	L		Ø 6 6B							SYS. DET. S4					

EX.: 1A, 2A, ETC. = LOOP NO.'S

FS = FLASH SENSE
ST = STOP TIME

⊗ Wired Input - Do not populate slot with detector card

INPUT FILE CONNECTION & PROGRAMMING CHART

LOOP NO.	LOOP TERMINAL	INPUT FILE POS.	PIN NO.	INPUT ASSIGNMENT NO.	DETECTOR NO.	NEMA PHASE	CALL	EXTEND	FULL TIME DELAY	STRETCH TIME	DELAY TIME
1A[1]	TB2-1,2	I1U	56	18	1	1	Y	Y			15
	-	J4U	48	10	26	6	Y	Y	Y		3
2A	TB2-5,6	I2U	39	1	2	2	Y	Y			
2B	TB2-7,8	I2L	43	5	12	2	Y	Y			
4A	TB4-9,10	I6U	41	3	4	4	Y	Y			
4B	TB4-11,12	I6L	45	7	14	4	Y	Y			
1B	TB6-1,2	I7U	65	27	34	1	Y	Y			15
✳ S1	TB6-9,10	I9U	60	22	11	SYS					
✳ S2	TB6-11,12	I9L	62	24	13	SYS					
6A	TB3-5,6	J2U	40	2	6	6	Y	Y			
6B	TB3-7,8	J2L	44	6	16	6	Y	Y			
✳ S3	TB7-9,10	J9U	59	21	15	SYS					
✳ S4	TB7-11,12	J9L	61	23	17	SYS					

[1] Add jumper from I1-W to J4-W. on rear of input file.

✳ System detector only. Remove the vehicle phase assigned to this detector in the default programming.

INPUT FILE POSITION LEGEND: J2L
FILE J
SLOT 2
LOWER

LOAD RESISTOR INSTALLATION DETAIL

(install resistor as shown below)

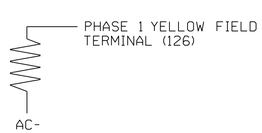

ACCEPTABLE VALUES

VALUE (ohms)	WATTAGE
1.5K - 1.9K	25W (min)
2.0K - 3.0K	10W (min)

THIS ELECTRICAL DETAIL IS FOR
THE SIGNAL DESIGN: 04-1433
DESIGNED: January 2018
SEALED: 5/25/2018
REVISED: N/A

Electrical Detail - Sheet 1 of 2

DOCUMENT NOT CONSIDERED FINAL UNLESS ALL SIGNATURES COMPLETED

ELECTRICAL AND PROGRAMMING DETAILS FOR:

NC 42
at
Sam Hunt Property

Division 4 Johnston County Clayton

PLAN DATE: January 2018 REVIEWED BY: J O Deaton
PREPARED BY: M W Yalch REVIEWED BY:

REVISIONS	INIT.	DATE

Prepared for the Offices of:
Transportation Mobility and Safety Division
Traffic Engineering Branch
Signals Management Section
STATE OF NORTH CAROLINA DEPT. OF TRANSPORTATION
750 N.Greenfield Pkwy,Garner,NC 27529

Prepared by
URS
URS Corporation – North Carolina
1600 Perimeter Park Drive
Morrisville, North Carolina 27560
TELEPHONE (919) 461-1100 FAX (919) 461-1415
NC LICENSE • C-2243

NORTH CAROLINA PROFESSIONAL SEAL 07438 ENGINEER JAMES O. DEATON

DocuSigned by: James O Deaton 5/25/2018
49FF8AC430BD40F...

SIG. INVENTORY NO. 04-1433

5/25/2018
L:\Morrisville\Jobs\R3825B\Traffic\Signals\Electricals\04-1433s-00-192.dgn
coxst

DocuSign Envelope ID: EDEA80FB-80A3-45F4-B6C8-CD80310DC6C8

PROJECT REFERENCE NO.	SHEET NO.
R-3825B	Sig. 2.2

LOGICAL I/O PROCESSOR PROGRAMMING DETAIL TO PRODUCE SPECIAL FYA-PPLT SIGNAL SEQUENCE

(program controller as shown below)

1. FROM MAIN MENU PRESS '2' (PHASE CONTROL), THEN '1' (PHASE CONTROL FUNCTIONS). SCROLL TO THE BOTTOM OF THE MENU AND ENABLE ACT LOGIC COMMANDS 1, 2 AND 3.

2. FROM MAIN MENU PRESS '6' (OUTPUTS), THEN '3' (LOGICAL I/O PROCESSOR).

```
  LOGICAL I/O COMMAND #1  (+/-COMMAND#)
IF  ACTIVE PHASE       #1  IS ON
AND RED CLEAR ON PHASE #1  IS ON

                SCROLL DOWN

THEN:
SET OUTPUT  ASSIGNMENT #50 ON
SET OUTPUT  ASSIGNMENT #51 OFF
```

NOTE: LOGIC FOR PHASE 1 RED CLEAR WHEN TRANSITIONING FROM PHASE 1 TO PHASE 2 (HEAD 11).

PRESS '+'

```
  LOGICAL I/O COMMAND #2  (+/-COMMAND#)
IF  ACTIVE PHASE       #1  IS ON

                SCROLL DOWN

THEN:
SET OUTPUT  ASSIGNMENT #52 OFF
```

NOTE: LOGIC FOR SWITCHING FLASHING YELLOW ARROW "OFF" DURING PHASE 1 (HEAD 11).

PRESS '+'

```
  LOGICAL I/O COMMAND #3  (+/-COMMAND#)
IF  YELLOW ON PHASE    #1  IS ON

                SCROLL DOWN

THEN:
SET OUTPUT  ASSIGNMENT #51 ON
```

NOTE: LOGIC FOR YELLOW ARROW CLEARANCE FROM PHASE 1 (HEAD 11).

LOGIC I/O PROCESSOR PROGRAMMING COMPLETE

OUTPUT REFERENCE SCHEDULE

USE TO INTERPRET LOGIC PROCESSOR

OUTPUT 50 = Overlap A Red
OUTPUT 51 = Overlap A Yellow
OUTPUT 52 = Overlap A Green

OVERLAP PROGRAMMING DETAIL

(program controller as shown below)

FROM MAIN MENU PRESS '8' (OVERLAPS), THEN '1' (VEHICLE OVERLAP SETTINGS).

```
 PAGE 1: VEHICLE OVERLAP 'A' SETTINGS
 PHASE:          ¦123456789101112131415 16
VEH OVL PARENTS:¦XX
VEH OVL NOT VEH:¦
VEH OVL NOT PED:¦
VEH OVL GRN EXT:¦
STARTUP COLOR: _ RED  _ YELLOW  _ GREEN
FLASH COLORS:  _ RED  _ YELLOW  X GREEN
SELECT VEHICLE OVERLAP OPTIONS:   (Y/N)
FLASH YELLOW IN CONTROLLER FLASH?...Y
GREEN EXTENSION (0-255 SEC).........0
YELLOW CLEAR (0=PARENT,3-25.5 SEC)..0.0
RED CLEAR (0=PARENT,0.1-25.5 SEC)...0.0
OUTPUT AS PHASE # (0=NONE, 1-16)....0
```

← NOTICE GREEN FLASH

PRESS '+' THREE TIMES

```
 PAGE 1: VEHICLE OVERLAP 'D' SETTINGS
 PHASE:          ¦123456789101112131415 16
VEH OVL PARENTS:¦X  X
VEH OVL NOT VEH:¦
VEH OVL NOT PED:¦
VEH OVL GRN EXT:¦
STARTUP COLOR: _ RED  _ YELLOW  _ GREEN
FLASH COLORS:  _ RED  _ YELLOW  _ GREEN
SELECT VEHICLE OVERLAP OPTIONS:   (Y/N)
FLASH YELLOW IN CONTROLLER FLASH?...N
GREEN EXTENSION (0-255 SEC).........0
YELLOW CLEAR (0=PARENT,3-25.5 SEC)..0.0
RED CLEAR (0=PARENT,0.1-25.5 SEC)...0.0
OUTPUT AS PHASE # (0=NONE, 1-16)....0
```

OVERLAP PROGRAMMING COMPLETE

FLASHER CIRCUIT MODIFICATION DETAIL

IN ORDER TO INSURE THAT SIGNALS FLASH CONCURRENTLY ON THE SAME APPROACH, MAKE THE FOLLOWING FLASHER CIRCUIT CHANGES:

1. ON REAR OF PDA - REMOVE WIRE FROM TERM. T2-4 AND TERMINATE ON T2-2.
2. ON REAR OF PDA - REMOVE WIRE FROM TERM. T2-5 AND TERMINATE ON T2-3.
3. REMOVE FLASHER UNIT 2.

THE CHANGES LISTED ABOVE TIES ALL PHASES AND OVERLAPS TO FLASHER UNIT 1.

THIS ELECTRICAL DETAIL IS FOR
THE SIGNAL DESIGN: 04-1433
DESIGNED: January 2018
SEALED: 5/25/2018
REVISED: N/A

Electrical Detail - Sheet 2 of 2

DOCUMENT NOT CONSIDERED FINAL UNLESS ALL SIGNATURES COMPLETED

Prepared by
URS
URS Corporation – North Carolina
1600 Perimeter Park Drive
Morrisville, North Carolina 27560
TELEPHONE (919) 461-1100 FAX (919) 461-1415
NC LICENSE • C-2243

ELECTRICAL AND PROGRAMMING DETAILS FOR:

Prepared for the Offices of:
Transportation Mobility and Safety Division
STATE OF NORTH CAROLINA
DEPARTMENT OF TRANSPORTATION
ITS & Signals Management Section
750 N.Greenfield Pkwy,Garner,NC 27529

NC 42
at
Sam Hunt Property

Division 4 Johnston County Clayton

PLAN DATE: January 2018		REVIEWED BY:	J O Deaton
PREPARED BY: M W Yalch		REVIEWED BY:	

REVISIONS	INIT.	DATE

NORTH CAROLINA PROFESSIONAL SEAL 07438 ENGINEER JAMES O. DEATON

DocuSigned by: James O Deaton 5/25/2018
40FF8AC430BD40F...

SIG. INVENTORY NO. 04-1433

5/25/2018
L:\Morrisville\Jobs\R3825B\Traffic\Signals\Electricals\04-1433e-00-192.dgn
coxsj

DocuSign Envelope ID: EDEA80FB-80A3-45F4-B6C8-CD80310DC6C8

PROJECT REFERENCE NO.	SHEET NO.
R-3825B	Sig.3.0

PHASING DIAGRAM

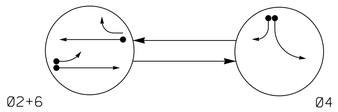

PHASING DIAGRAM DETECTION LEGEND

- DETECTED MOVEMENT
- UNDETECTED MOVEMENT (OVERLAP)
- UNSIGNALIZED MOVEMENT
- PEDESTRIAN MOVEMENT

TABLE OF OPERATION

SIGNAL FACE	PHASE Ø2+6	PHASE Ø4	FLASH
21	~~F Y~~	~~R~~	~~Y~~
22, 23	G	R	Y
41, 42, 43	R	G	R
61, 62	G	R	Y

SIGNAL FACE I.D.

All Heads L.E.D.

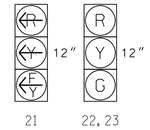

OASIS 2070 LOOP & DETECTOR INSTALLATION CHART

INDUCTIVE LOOPS					DETECTOR PROGRAMMING						
LOOP	SIZE (FT)	DISTANCE FROM STOPBAR (FT)	TURNS	NEW LOOP	PHASE	CALLING	EXTENSION	FULL TIME DELAY	STRETCH TIME	DELAY TIME	SYSTEM LOOP	NEW CARD
2A	6X6	420	✳	Y	2	Y	Y	-	-	-	-	✳
2B	6X40	0	✳	Y	2	Y	Y	Y	-	3	-	✳
2C	6X40	0	✳	Y	2	Y	Y	Y	2.0	5	-	✳
4A	6X40	0	✳	Y	4	Y	Y	-	-	3	-	✳
4B	6X40	0	✳	Y	4	Y	Y	-	-	15	-	✳
4C	6X40	+45	✳	Y	4	Y	Y	-	-	15	-	✳
6A	6X6	420	✳	Y	6	Y	Y	-	-	-	-	✳
6B	6X40	0	✳	Y	6	Y	Y	Y	2.0	5	-	✳

✳ Video Detection Zone

2 Phase
Fully Actuated
Isolated

NOTES

1. Refer to "Roadway Standard Drawings NCDOT" dated January 2018, "Standard Specifications for Roads and Structures" dated January 2018.
2. Do not program signal for late night flashing operation unless otherwise directed by the Engineer.
3. Set all detector units to presence mode.
4. Locate new cabinet so as not to obstruct sight distance of vehicles turning right on red.

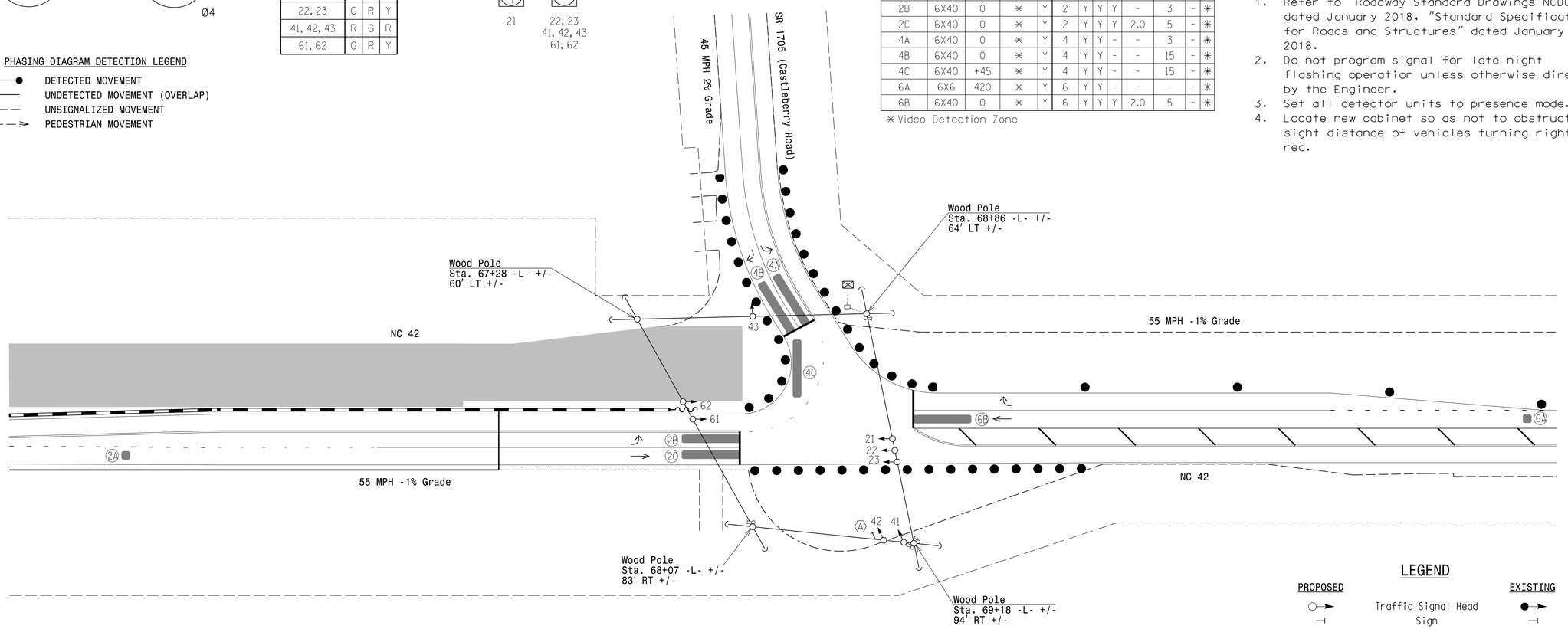

LEGEND

PROPOSED		EXISTING
	Traffic Signal Head	
	Sign	
	Signal Pole with Guy	
	Signal Pole with Sidewalk Guy	
	Video Detection Area	
	Video Detector	
	Controller & Cabinet	
	Junction Box	
	Oversized Junction Box	
	2-in Underground Conduit	
N/A	Right of Way	
	Directional Arrow	
	Construction Zone	
	Construction Drums	N/A
A	Right Arrow "ONLY" Sign (R3-5R)	A

OASIS 2070 TIMING CHART

FEATURE	PHASE 2	PHASE 4	PHASE 6
Min Green 1 *	14	7	14
Extension 1 *	6.0	2.0	6.0
Max Green 1 *	90	45	90
Yellow Clearance	5.3	3.1	5.3
Red Clearance	1.6	2.8	1.1
Red Revert	2.0	2.0	2.0
Walk 1 *	-	-	-
Don't Walk 1	-	-	-
Seconds Per Actuation *	-	-	-
Max Variable Initial *	-	-	-
Time Before Reduction *	15	-	15
Time To Reduce *	30	-	30
Minimum Gap	3.4	-	3.4
Recall Mode	MIN RECALL	-	MIN RECALL
Vehicle Call Memory	-	-	-
Dual Entry	-	-	-
Simultaneous Gap	ON	ON	ON

* These values may be field adjusted. Do not adjust Min Green and Extension times for phases 2 and 6 lower than what is shown. Min Green for all other phases should not be lower than 4 seconds.

5/25/2018
12:46:27 PM
$$$$Jobs$$R3825B$Traffic$Signals$04124IT1_sig_dsn_date.dgn
cokel

New Installation - Temporary Design 1 (TMP Phase II)

DOCUMENT NOT CONSIDERED FINAL UNLESS ALL SIGNATURES COMPLETED

Prepared by
URS
URS Corporation – North Carolina
1600 Perimeter Park Drive
Morrisville, North Carolina 27560
TELEPHONE (919) 461-1100 FAX (919) 461-1415
NC LICENSE • C-2243

Prepared for the Offices of:
Transportation Mobility and Safety Division
Signal Design Section
750 N.Greenfield Pkwy,Garner,NC 27529

NC 42
at
SR 1705 (Castleberry Road)

Division 4 Johnston County Clayton

PLAN DATE:	January 2018	REVIEWED BY:	C. L. Kalencik
PREPARED BY:	S. W. Cox	REVIEWED BY:	

SCALE 0 40 1"=40'

REVISIONS	INIT.	DATE

NORTH CAROLINA PROFESSIONAL SEAL 040715 ENGINEER COURTNEY L. KALENCIK

DocuSigned by: Courtney L. Kalencik 5/25/2018
DFE9158CE2864FE...

SIG. INVENTORY NO. 04-124IT1

DocuSign Envelope ID: EDEA80FB-80A3-45F4-B6C8-CD80310DC6C8

PROJECT REFERENCE NO.	SHEET NO.
R-3825B	Sig. 3.1

EDI MODEL 2018ECL-NC CONFLICT MONITOR PROGRAMMING DETAIL

(remove jumpers and set switches as shown)

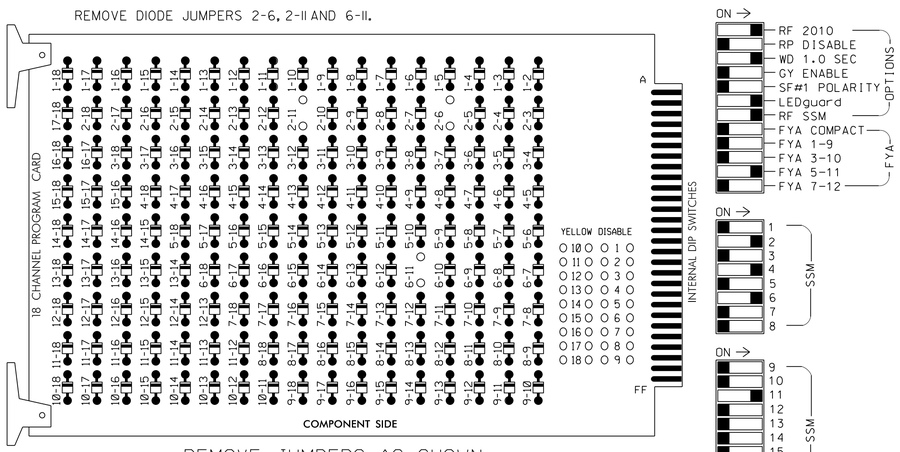

■ = DENOTES POSITION OF SWITCH

NOTES:

1. Card is provided with all diode jumpers in place. Removal of any jumper allows its channels to run concurrently.
2. Ensure jumpers SEL2-SEL5 and SEL9 are present on the monitor board.
3. Ensure that Red Enable is active at all times during normal operation.
4. Connect serial cable from conflict monitor to comm. port 1 of 2070 controller. Ensure conflict monitor communicates with 2070.

NOTES

1. To prevent "flash-conflict" problems, insert red flash program blocks for all unused vehicle load switches in the output file. The installer shall verify that signal heads flash in accordance with the Signal Plans.
2. Enable Simultaneous Gap-Out for all phases.
3. Program phases 2 and 6 for Gap Reduction.
4. Program phases 2 and 6 for Start Up In Green.
5. Program phases 2 and 6 for Yellow Flash.

EQUIPMENT INFORMATION

CONTROLLER.....2070
CABINET.....332 W/ AUX
SOFTWARE.....ECONOLITE OASIS
CABINET MOUNT.....BASE
OUTPUT FILE POSITIONS...18 WITH AUX. OUTPUT FILE
LOAD SWITCHES USED.....S2,S5,S8,AUX S4
PHASES USED.....2,4,6
OVERLAP "A".....NOT USED
OVERLAP "B".....NOT USED
OVERLAP "C".....6
OVERLAP "D".....NOT USED

SIGNAL HEAD HOOK-UP CHART

LOAD SWITCH NO.	S1	S2	S3	S4	S5	S6	S7	S8	S9	S10	S11	S12	AUX S1	AUX S2	AUX S3	AUX S4	AUX S5	AUX S6
CMU CHANNEL NO.	1	2	13	3	4	14	5	6	15	7	8	16	9	10	17	11	12	18
PHASE	1	2	2 PED	3	4	4 PED	5	6	6 PED	7	8	8 PED	OLA	OLB	SPARE	OLC	OLD	SPARE
SIGNAL HEAD NO.	NU	22,23	NU	NU	41,42, 43	NU	NU	61,62	NU	NU	NU	NU	NU	NU	NU	21★	NU	NU
RED		128			101			134										
YELLOW		129			102			135										
GREEN		130			103			136										
RED ARROW																A114		
YELLOW ARROW																A115		
FLASHING YELLOW ARROW																A116		
GREEN ARROW																		

NU = Not Used

★ See pictorial of head wiring in detail below.

INPUT FILE POSITION LAYOUT

(front view)

	1	2	3	4	5	6	7	8	9	10	11	12	13	14
FILE "I" U	SLOT	SLOT	SLOT	SLOT	SLOT	SLOT	SLOT	SLOT	SLOT	SLOT	SLOT	SLOT	SLOT	FS DC ISOLATOR
FILE "I" L	EMPTY	EMPTY	EMPTY	EMPTY	EMPTY	EMPTY	EMPTY	EMPTY	EMPTY	EMPTY	EMPTY	EMPTY	EMPTY	ST DC ISOLATOR
FILE "J" U	SLOT	SLOT	SLOT	SLOT	SLOT	SLOT	SLOT	SLOT	SLOT	SLOT	SLOT	SLOT	SLOT	SLOT
FILE "J" L	EMPTY	EMPTY	EMPTY	EMPTY	EMPTY	EMPTY	EMPTY	EMPTY	EMPTY	EMPTY	EMPTY	EMPTY	EMPTY	EMPTY

EX.: 1A, 2A, ETC. = LOOP NO.'S

FS = FLASH SENSE
ST = STOP TIME

OVERLAP PROGRAMMING DETAIL

(program controller as shown below)

FROM MAIN MENU PRESS '8' (OVERLAPS), THEN '1' (VEHICLE OVERLAP SETTINGS).

PRESS '+' TWICE

```
 PAGE 1: VEHICLE OVERLAP 'C' SETTINGS
 PHASE:          |123456789101112131415 16
VEH OVL PARENTS:|     X
VEH OVL NOT VEH:|
VEH OVL NOT PED:|
VEH OVL GRN EXT:|
STARTUP COLOR: _ RED  _ YELLOW  _ GREEN
FLASH COLORS:  _ RED  _ YELLOW  X GREEN
SELECT VEHICLE OVERLAP OPTIONS:   (Y/N)
FLASH YELLOW IN CONTROLLER FLASH?...Y
GREEN EXTENSION (0-255 SEC).........0
YELLOW CLEAR (0=PARENT,3-25.5 SEC)..0.0
RED CLEAR (0=PARENT,0.1-25.5 SEC)...0.0
OUTPUT AS PHASE # (0=NONE, 1-16)....0
```

NOTICE GREEN FLASH

OVERLAP PROGRAMMING COMPLETE

FYA SIGNAL WIRING DETAIL

(wire signal head as shown)

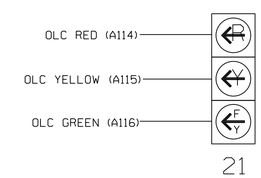

SPECIAL DETECTOR NOTE

Install a video detection system for vehicle detection. Perform installation according to manufacturer's directions and NCDOT engineer-approved mounting locations to accomplish the detection schemes shown on the Signal Design Plans.

THIS ELECTRICAL DETAIL IS FOR
THE SIGNAL DESIGN: 04-1241T1
DESIGNED: January 2018
SEALED: 5/25/2018
REVISED: N/A

Temporary Design 1 (TMP Phase II)
Electrical Detail

DOCUMENT NOT CONSIDERED FINAL UNLESS ALL SIGNATURES COMPLETED

ELECTRICAL AND PROGRAMMING DETAILS FOR:

NC 42
at
SR 1705 (Castleberry Road)

Division 4 | Johnston County | Clayton

PLAN DATE: January 2018 | REVIEWED BY: J O Deaton
PREPARED BY: M W Yalch | REVIEWED BY:

REVISIONS	INIT.	DATE

Prepared for the Offices of:
Traffic Engineering, Mobility and Safety Division
Signals Management Section
STATE OF NORTH CAROLINA DEPARTMENT OF TRANSPORTATION
750 N.Greenfield Pkwy,Garner,NC 27529

NORTH CAROLINA PROFESSIONAL SEAL 07438 ENGINEER JAMES O. DEATON

DocuSigned by: James O Deaton 5/25/2018
49FF8AC430BD46F...

SIG. INVENTORY NO. 04-1241T1

Prepared by
URS
URS Corporation – North Carolina
1600 Perimeter Park Drive
Morrisville, North Carolina 27560
TELEPHONE (919) 461-1100 FAX (919) 461-1415
NC LICENSE • C-2243

5/25/2018
L:\Morrisville\Jobs\#43825B\Traffic\Signals\Electricals\04-1241t1e-00-192.dgn
coxst

DocuSign Envelope ID: EDEA80FB-80A3-45F4-B6C8-CD80310DC6C8

PROJECT REFERENCE NO.	SHEET NO.
R-3825B	Sig.4.0

PHASING DIAGRAM

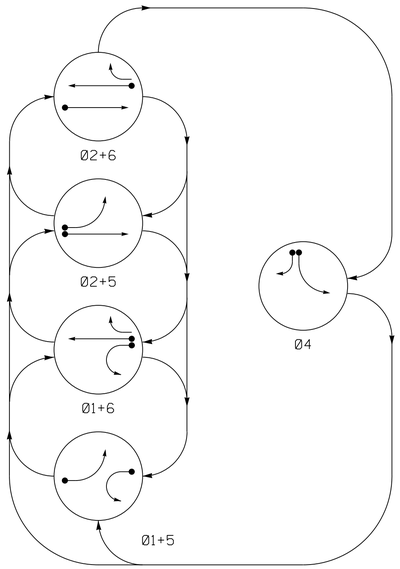

PHASING DIAGRAM DETECTION LEGEND

- DETECTED MOVEMENT
- UNDETECTED MOVEMENT (OVERLAP)
- UNSIGNALIZED MOVEMENT
- PEDESTRIAN MOVEMENT

TABLE OF OPERATION

SIGNAL FACE	PHASE 0 1 + 5	0 1 + 6	0 2 + 5	0 2 + 6	0 4 + 8	FLASH
11	↶	↶	(R)	(R)	(R)	(R)
22, 23	R	R	G	G	R	Y
41, 42	R	R	R	R	G	R
51	←	(R)	←	(R)	(R)	(R)
61, 62	R	G	R	G	R	Y

SIGNAL FACE I.D.

All Heads L.E.D.

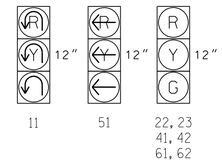

OASIS 2070 LOOP & DETECTOR INSTALLATION CHART

INDUCTIVE LOOPS					DETECTOR PROGRAMMING							
LOOP	SIZE (FT)	DISTANCE FROM STOPBAR (FT)	TURNS	NEW LOOP	PHASE	CALLING	EXTENSION	FULL TIME DELAY	STRETCH TIME	DELAY TIME	SYSTEM LOOP	NEW CARD
1A	6X40	0	✳	Y	1	Y	Y	-	-	15	-	✳
2A	6X6	420	✳	Y	2	Y	Y	-	-	-	-	✳
2B	6X40	0	✳	Y	2	Y	Y	Y	2.0	5	-	✳
4A	6X40	0	✳	Y	4	Y	Y	-	-	3	-	✳
4B	6X40	0	✳	Y	4	Y	Y	-	-	15	-	✳
5A	6X40	0	✳	Y	5	Y	Y	-	-	15	-	✳
6A	6X6	420	✳	Y	6	Y	Y	-	-	-	-	✳
6B	6X40	0	✳	Y	6	Y	Y	Y	2.0	5	-	✳

✳ Video Detection Zone

5 Phase
Fully Actuated
Isolated

NOTES

1. Refer to "Roadway Standard Drawings NCDOT" dated January 2018, "Standard Specifications for Roads and Structures" dated January 2018.
2. Do not program signal for late night flashing operation unless otherwise directed by the Engineer.
3. Phase 1 and/or phase 5 may be lagged.
4. Reposition existing signal heads numbered 41, 42, 61, 62 and 63.
5. Set all detector units to presence mode.

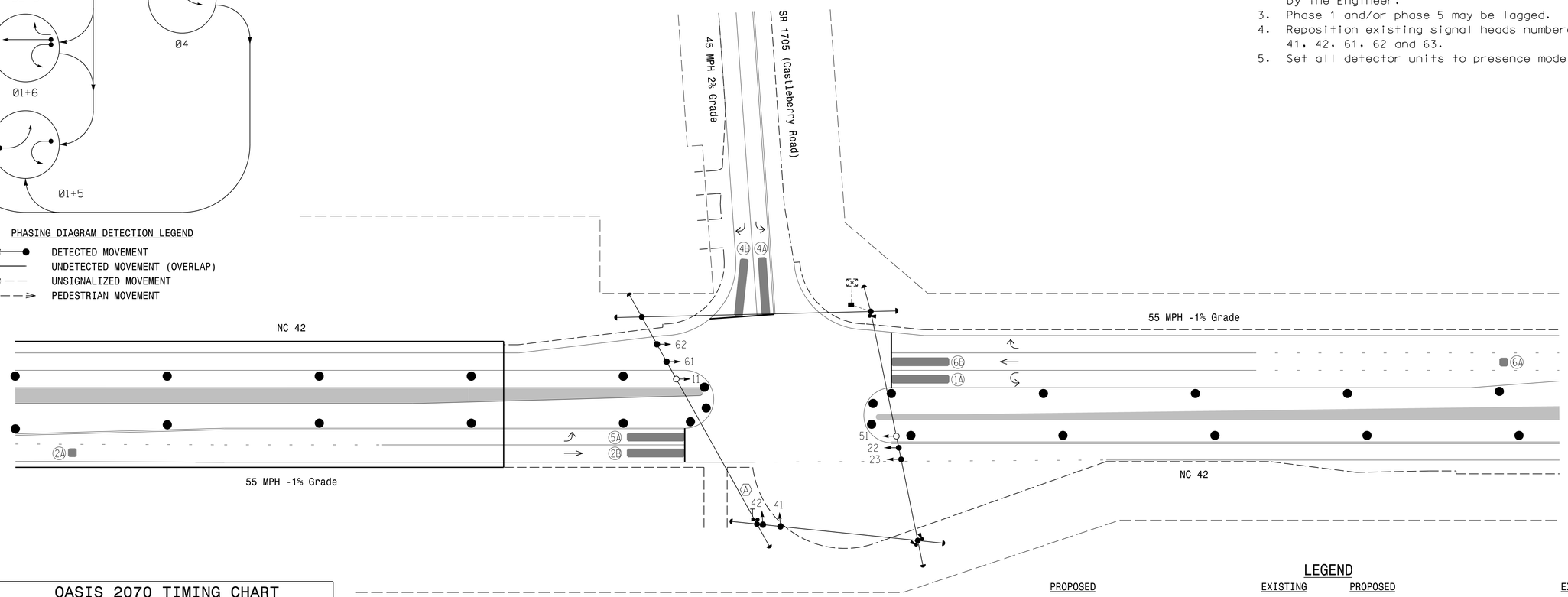

OASIS 2070 TIMING CHART

FEATURE	PHASE 1	2	4	5	6
Min Green 1 *	7	14	7	7	14
Extension 1 *	2.0	6.0	2.0	2.0	6.0
Max Green 1 *	25	90	45	25	90
Yellow Clearance	3.0	5.3	3.1	3.2	5.3
Red Clearance	3.3	1.1	2.6	2.8	1.4
Red Revert	2.0	2.0	2.0	2.0	2.0
Walk 1 *	-	-	-	-	-
Don't Walk 1	-	-	-	-	-
Seconds Per Actuation *	-	-	-	-	-
Max Variable Initial *	-	-	-	-	-
Time Before Reduction *	-	15	-	-	15
Time To Reduce *	-	30	-	-	30
Minimum Gap	-	3.4	-	-	3.4
Recall Mode	-	MIN RECALL	-	-	MIN RECALL
Vehicle Call Memory	-	-	-	-	-
Dual Entry	-	-	-	-	-
Simultaneous Gap	ON	ON	ON	ON	ON

* These values may be field adjusted. Do not adjust Min Green and Extension times for phases 2 and 6 lower than what is shown. Min Green for all other phases should not be lower than 4 seconds.

LEGEND

PROPOSED		EXISTING	PROPOSED		EXISTING
	Traffic Signal Head			2-in Underground Conduit	
	Sign		N/A	Right of Way	
	Signal Pole with Guy			Directional Arrow	
	Signal Pole with Sidewalk Guy			Construction Zone	
	Radar Detection Area			Construction Drums	N/A
	Video Detector		A	Right Arrow "ONLY" Sign (R3-5R)	A
	Controller & Cabinet				
	Junction Box				
	Oversized Junction Box				

New Installation - Temporary Design 2 (TMP Phase III)

DOCUMENT NOT CONSIDERED FINAL UNLESS ALL SIGNATURES COMPLETED

Prepared by
URS
URS Corporation – North Carolina
1600 Perimeter Park Drive
Morrisville, North Carolina 27560
TELEPHONE (919) 461-1100 FAX (919) 461-1415
NC LICENSE • C-2243

Prepared for the Offices of:
Transportation Mobility and Safety Division
Signal Design Section
750 N.Greenfield Pkwy,Garner,NC 27529

SCALE 0 40
1"=40'

NC 42
at
SR 1705 (Castleberry Road)

Division 4 Johnston County Clayton

PLAN DATE: January 2018 REVIEWED BY: C. L. Kalencik
PREPARED BY: S. W. Cox REVIEWED BY:

REVISIONS	INIT.	DATE

NORTH CAROLINA PROFESSIONAL SEAL 040715 ENGINEER COURTNEY L. KALENCIK

DocuSigned by: Courtney L. Kalencik 5/25/2018
DFE9158CE2864FE...

SIG. INVENTORY NO. 04-124IT2

5/25/2018
L:\Raleigh\Projects\R3825B\Traffic\Signals\04124IT2_sig_dsn_date.dgn
cokst

DocuSign Envelope ID: EDEA80FB-80A3-45F4-B6C8-CD80310DC6C8

PROJECT REFERENCE NO.	SHEET NO.
R-3825B	Sig. 4.1

EDI MODEL 2018ECL-NC CONFLICT MONITOR PROGRAMMING DETAIL

(remove jumpers and set switches as shown)

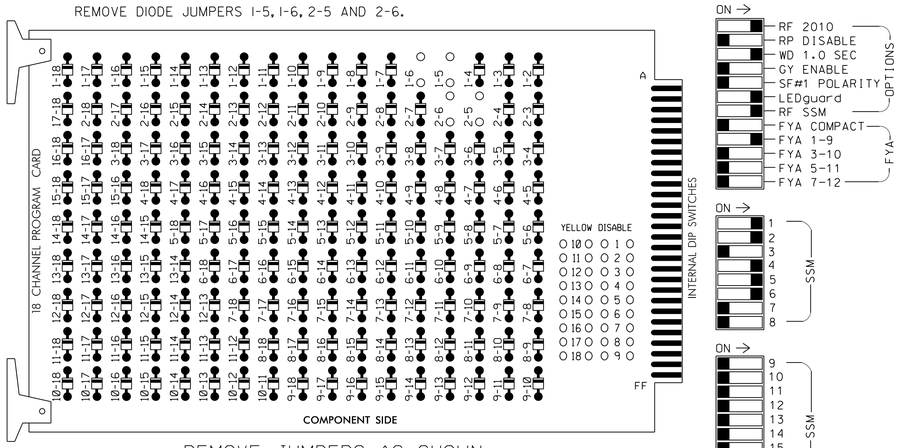

■ = DENOTES POSITION OF SWITCH

NOTES:

1. Card is provided with all diode jumpers in place. Removal of any jumper allows its channels to run concurrently.
2. Ensure jumpers SEL2-SEL5 and SEL9 are present on the monitor board.
3. Ensure that Red Enable is active at all times during normal operation.
4. Connect serial cable from conflict monitor to comm. port 1 of 2070 controller. Ensure conflict monitor communicates with 2070.

NOTES

1. To prevent "flash-conflict" problems, insert red flash program blocks for all unused vehicle load switches in the output file. The installer shall verify that signal heads flash in accordance with the Signal Plans.
2. Enable Simultaneous Gap-Out for all phases.
3. Program phases 2 and 6 for Gap Reduction.
4. Program phases 2 and 6 for Start Up In Green.
5. Program phases 2 and 6 for Yellow Flash.

SIGNAL HEAD HOOK-UP CHART

LOAD SWITCH NO.	S1	S2	S3	S4	S5	S6	S7	S8	S9	S10	S11	S12	AUX S1	AUX S2	AUX S3	AUX S4	AUX S5	AUX S6
CMU CHANNEL NO.	1	2	13	3	4	14	5	6	15	7	8	16	9	10	17	11	12	18
PHASE	1	2	2 PED	3	4	4 PED	5	6	6 PED	7	8	8 PED	OLA	OLB	SPARE	OLC	OLD	SPARE
SIGNAL HEAD NO.	11	22,23	NU	NU	41,42	NU	51	61,62	NU	NU	NU	NU	NU	NU	NU	NU	NU	NU
RED		128			101			134										
YELLOW		129			102			135										
GREEN		130			103			136										
RED ARROW	125						131											
YELLOW ARROW	126						132											
FLASHING YELLOW ARROW																		
GREEN ARROW	127						133											

NU = Not Used

EQUIPMENT INFORMATION

CONTROLLER.....2070
CABINET.....332 W/ AUX
SOFTWARE.....ECONOLITE OASIS
CABINET MOUNT.....BASE
OUTPUT FILE POSITIONS...18 WITH AUX. OUTPUT FILE
LOAD SWITCHES USED.....S1,S2,S5,S7,S8
PHASES USED.....1,2,4,5,6
OVERLAP "A".....NOT USED
OVERLAP "B".....NOT USED
OVERLAP "C".....NOT USED
OVERLAP "D".....NOT USED

OVERLAP PROGRAMMING DETAIL

(program controller as shown below)

FROM MAIN MENU PRESS '8' (OVERLAPS), THEN '1' (VEHICLE OVERLAP SETTINGS).

PRESS '+' TWICE

```
PAGE 1: VEHICLE OVERLAP 'C' SETTINGS
PHASE:          |123456789101112131415 16
VEH OVL PARENTS:|      X
VEH OVL NOT VEH:|
VEH OVL NOT PED:|
VEH OVL GRN EXT:|
STARTUP COLOR: _ RED  _ YELLOW  _ GREEN
FLASH COLORS:  _ RED  _ YELLOW  X GREEN
SELECT VEHICLE OVERLAP OPTIONS:   (Y/N)
FLASH YELLOW IN CONTROLLER FLASH?...Y
GREEN EXTENSION (0-255 SEC).........0
YELLOW CLEAR (0=PARENT,3-25.5 SEC)..0.0
RED CLEAR (0=PARENT,0.1-25.5 SEC)...0.0
OUTPUT AS PHASE # (0=NONE, 1-16)....0
```

← NOTICE GREEN FLASH

OVERLAP PROGRAMMING COMPLETE

SPECIAL DETECTOR NOTE

Install a video detection system for vehicle detection. Perform installation according to manufacturer's directions and NCDOT engineer-approved mounting locations to accomplish the detection schemes shown on the Signal Design Plans.

INPUT FILE POSITION LAYOUT

(front view)

		1	2	3	4	5	6	7	8	9	10	11	12	13	14
FILE "I"	U	SLOT EMPTY	SLOT EMPTY	SLOT EMPTY	SLOT EMPTY	SLOT EMPTY	SLOT EMPTY	SLOT EMPTY	SLOT EMPTY	SLOT EMPTY	SLOT EMPTY	SLOT EMPTY	SLOT EMPTY	SLOT EMPTY	FS DC ISOLATOR
	L														ST DC ISOLATOR
FILE "J"	U	SLOT EMPTY	SLOT EMPTY	SLOT EMPTY	SLOT EMPTY	SLOT EMPTY	SLOT EMPTY	SLOT EMPTY	SLOT EMPTY	SLOT EMPTY	SLOT EMPTY	SLOT EMPTY	SLOT EMPTY	SLOT EMPTY	SLOT EMPTY
	L														

EX.: 1A, 2A, ETC. = LOOP NO.'S

FS = FLASH SENSE
ST = STOP TIME

THIS ELECTRICAL DETAIL IS FOR
THE SIGNAL DESIGN: 04-1241T2
DESIGNED: January 2018
SEALED: 5/25/2018
REVISED: N/A

Temporary Design 2 (TMP Phase III)
Electrical Detail

DOCUMENT NOT CONSIDERED FINAL UNLESS ALL SIGNATURES COMPLETED

ELECTRICAL AND PROGRAMMING DETAILS FOR:

NC 42
at
SR 1705 (Castleberry Road)

Division 4 Johnston County Clayton

PLAN DATE: January 2018 REVIEWED BY: J O Deaton
PREPARED BY: M W Yalch REVIEWED BY:

REVISIONS	INIT.	DATE

Prepared for the Offices of:
Transportation Mobility and Safety Division
Traffic Engineering & Signals Management Section
STATE OF NORTH CAROLINA DEPARTMENT OF TRANSPORTATION
750 N.Greenfield Pkwy,Garner,NC 27529

NORTH CAROLINA PROFESSIONAL SEAL 07438 ENGINEER JAMES O. DEATON

DocuSigned by: 40FFBAC430BD40F... 5/25/2018

SIG. INVENTORY NO. 04-1241T2

Prepared by
URS
URS Corporation – North Carolina
1600 Perimeter Park Drive
Morrisville, North Carolina 27560
TELEPHONE (919) 461-1100 FAX (919) 461-1415
NC LICENSE • C-2243

5/25/2018
L:\Morrisville\Jobs\R3825B\Traffic\Signals\Electricals\04-1241T2e-00-192.dgn
coxsi

DocuSign Envelope ID: EDEA80FB-80A3-45F4-B6C8-CD80310DC6C8

PROJECT REFERENCE NO.	SHEET NO.
R-3825B	Sig.5.0

PHASING DIAGRAM

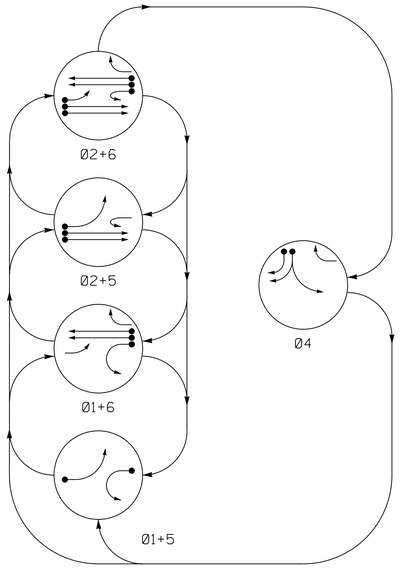

PHASING DIAGRAM DETECTION LEGEND

- DETECTED MOVEMENT
- UNDETECTED MOVEMENT (OVERLAP)
- UNSIGNALIZED MOVEMENT
- PEDESTRIAN MOVEMENT

TABLE OF OPERATION

SIGNAL FACE	PHASE 01+5	01+6	02+5	02+6	04	FLASH
11			FY	FY	R	FY
21, 22	R	R	G	G	R	Y
41, 42	R	R	R	R	G	R
51	←	FY	←	FY	R	Y
61	R	G	R	G	R	Y
62	R	G	R	G	R	Y

SIGNAL FACE I.D.

All Heads L.E.D.

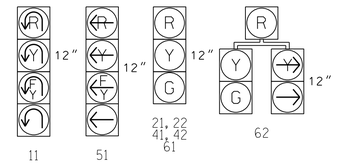

OASIS 2070 LOOP & DETECTOR INSTALLATION CHART

INDUCTIVE LOOPS					DETECTOR PROGRAMMING						
LOOP	SIZE (FT)	DISTANCE FROM STOPBAR (FT)	TURNS	NEW LOOP	PHASE	CALLING	EXTENSION	FULL TIME DELAY	STRETCH TIME	DELAY TIME	SYSTEM LOOP	NEW CARD
1A	6X40	0	2-4-2	Y	1	Y	Y	-	-	15	-	Y
					6	Y	Y	Y	-	3	-	Y
2A	6X6	420	✳	Y	2	Y	Y	-	-	-	-	✳
2B	6X6	420	✳	Y	2	Y	Y	-	-	-	-	✳
4A	6X40	0	2-4-2	Y	4	Y	Y	-	-	3	-	Y
4B	6X40	0	2-4-2	Y	4	Y	Y	-	-	15	-	Y
5A	6X40	0	2-4-2	Y	5	Y	Y	-	-	15	-	Y
					2	Y	Y	Y	-	3	-	Y
6A	6X6	420	5	Y	6	Y	Y	-	-	-	-	Y
6B	6X6	420	5	Y	6	Y	Y	-	-	-	-	Y

✳ Radar Detection Zone

5 Phase
Fully Actuated
NC 42 (East of Clayton)

NOTES

1. Refer to "Roadway Standard Drawings NCDOT" dated January 2018, "Standard Specifications for Roads and Structures" dated January 2018.
2. Do not program signal for late night flashing operation unless otherwise directed by the Engineer.
3. Phase 1 and/or phase 5 may be lagged.
4. Set all detector units to presence mode.
5. Maximum times shown in timing chart are for free-run operation only. Coordinated signal system timing values supersede these values.
6. Closed loop system data: Controller Asset #1241.
7. All metal poles and arms should be black in color as specified in the project special provisions.

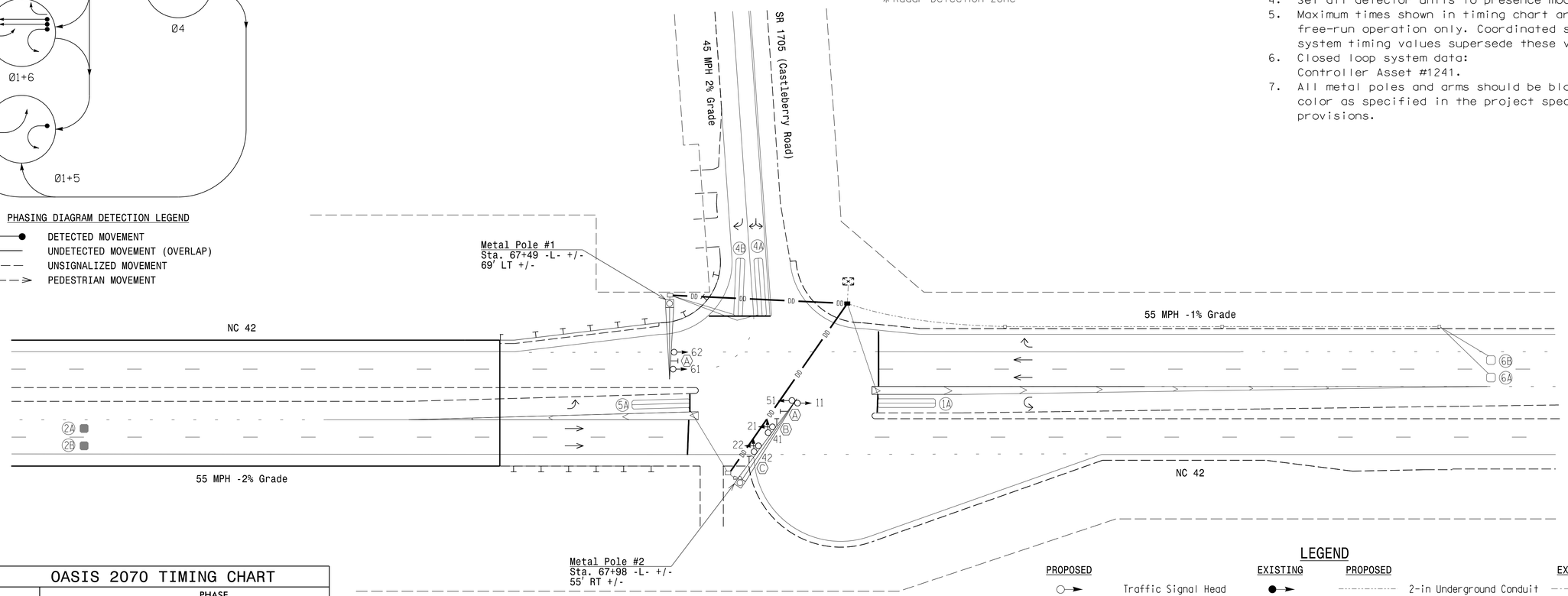

OASIS 2070 TIMING CHART

FEATURE	PHASE 1	2	4	5	6
Min Green 1 *	7	14	7	7	14
Extension 1 *	2.0	6.0	2.0	2.0	6.0
Max Green 1 *	25	90	45	25	90
Yellow Clearance	3.0	5.3	3.1	3.2	5.3
Red Clearance	1.8	1.3	2.2	2.2	1.3
Red Revert	2.0	2.0	2.0	2.0	2.0
Walk 1 *	-	-	-	-	-
Don't Walk 1	-	-	-	-	-
Seconds Per Actuation *	-	1.8	-	-	1.8
Max Variable Initial *	-	46	-	-	46
Time Before Reduction *	-	15	-	-	15
Time To Reduce *	-	30	-	-	30
Minimum Gap	-	3.4	-	-	3.4
Recall Mode	-	MIN RECALL	-	-	MIN RECALL
Vehicle Call Memory	-	YELLOW	-	-	YELLOW
Dual Entry	-	-	-	-	-
Simultaneous Gap	ON	ON	ON	ON	ON

* These values may be field adjusted. Do not adjust Min Green and Extension times for phases 2 and 6 lower than what is shown. Min Green for all other phases should not be lower than 4 seconds.

LEGEND

PROPOSED		EXISTING	PROPOSED		EXISTING
	Traffic Signal Head			2-in Underground Conduit	
	Metal Pole with Mastarm		DD	Directional Drill	N/A
	Sign		N/A	Right of Way	
	Inductive Loop Detector			Directional Arrow	
	Radar Loop Detector		A	Street Name Sign (D3-1)	A
	Video Detector		B	Combined Left and Right Arrow Sign	B
	Controller & Cabinet		C	Right Arrow "ONLY" Sign (R3-5R)	C
	Junction Box				
	Oversized Junction Box				

New Installation - Final Design

Prepared by
URS
URS Corporation – North Carolina
1600 Perimeter Park Drive
Morrisville, North Carolina 27560
TELEPHONE (919) 461-1100 FAX (919) 461-1415
NC LICENSE # C-2243

Prepared for the Offices of:
Transportation Mobility and Safety Division
STATE OF NORTH CAROLINA DEPARTMENT OF TRANSPORTATION
Signal Design Section
750 N.Greenfield Pkwy,Garner,NC 27529

NC 42
at
SR 1705 (Castleberry Road)

Division 4 Johnston County Clayton

PLAN DATE: January 2018 REVIEWED BY: C. L. Kalencik
PREPARED BY: S. W. Cox REVIEWED BY:

SCALE 0 40 1"=40'

REVISIONS	INIT.	DATE

DOCUMENT NOT CONSIDERED FINAL UNLESS ALL SIGNATURES COMPLETED

NORTH CAROLINA PROFESSIONAL SEAL 040715 ENGINEER COURTNEY L. KALENCIK

DocuSigned by: Courtney L. Kalencik 5/25/2018
0FE9158CE2864FE...

SIG. INVENTORY NO. 04-1241

5/25/2018
L:\Work\Raleigh\Jobs\R3825B\Traffic\Signals\041241_sig.dgn_date.dgn
coxsi

DocuSign Envelope ID: EDEA80FB-80A3-45F4-B6C8-CD80310DC6C8

PROJECT REFERENCE NO.	SHEET NO.
R-3825B	Sig. 5.1

EDI MODEL 2018ECL-NC CONFLICT MONITOR PROGRAMMING DETAIL

(remove jumpers and set switches as shown)

REMOVE DIODE JUMPERS I-5, I-6, I-9, I-11, 2-5, 2-6, 2-9, 2-11, 5-9, 5-11, 6-9, 6-11 AND 9-11.

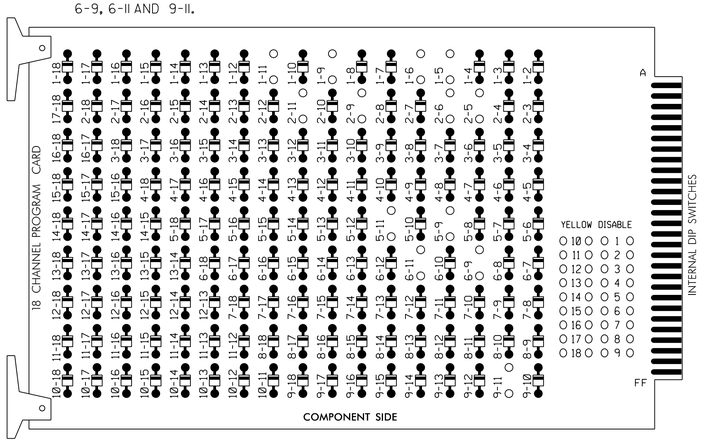

REMOVE JUMPERS AS SHOWN

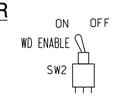

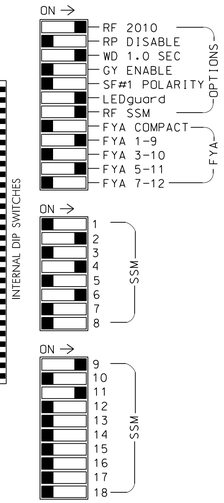

NOTES:

1. Card is provided with all diode jumpers in place. Removal of any jumper allows its channels to run concurrently.
2. Ensure jumpers SEL2-SEL5 and SEL9 are present on the monitor board.
3. Ensure that Red Enable is active at all times during normal operation.
4. Connect serial cable from conflict monitor to comm. port 1 of 2070 controller. Ensure conflict monitor communicates with 2070.

NOTES

1. To prevent "flash-conflict" problems, insert red flash program blocks for all unused vehicle load switches in the output file. The installer shall verify that signal heads flash in accordance with the Signal Plans.
2. Enable Simultaneous Gap-Out for all phases.
3. Program phases 2 and 6 for Variable Initial and Gap Reduction.
4. Program phases 2 and 6 for Start Up In Green.
5. Program phases 2 and 6 for Yellow Flash and overlap 1 as Wag Overlaps.
6. The cabinet and controller are part of the NC 42 (East of Clayton) Closed Loop System.

EQUIPMENT INFORMATION

CONTROLLER.....2070
CABINET.....332 W/ AUX
SOFTWARE.....ECONOLITE OASIS
CABINET MOUNT.....BASE
OUTPUT FILE POSITIONS...18 WITH AUX. OUTPUT FILE
LOAD SWITCHES USED.....S1,S2,S5,S7,S8, AUX S1,AUX S4
PHASES USED.....1,2,4,5,6
OVERLAP "A".....1+2
OVERLAP "B".....NOT USED
OVERLAP "C".....5+6
OVERLAP "D".....NOT USED

SIGNAL HEAD HOOK-UP CHART

LOAD SWITCH NO.	S1	S2	S3	S4	S5		S6	S7	S8	S9	S10	S11	S12	AUX S1	AUX S2	AUX S3	AUX S4	AUX S5	AUX S6
CMU CHANNEL NO.	1	2	13	3	4		14	5	6	15	7	8	16	9	10	17	11	12	18
PHASE	1	2	2 PED	3	4		4 PED	5	6	6 PED	7	8	8 PED	OLA	OLB	SPARE	OLC	OLD	SPARE
SIGNAL HEAD NO.	11★	21,22	NU	NU	41,42	62	NU	51★	61,62	NU	NU	NU	NU	11★	NU	NU	51★	NU	NU
RED		128			101				134										
YELLOW	✳	129			102			✳	135										
GREEN		130			103				136										
RED ARROW														A121			A114		
YELLOW ARROW						102								A122			A115		
FLASHING YELLOW ARROW														A123			A116		
GREEN ARROW	127					103		133											

NU = Not Used

✳ Denotes install load resistor. See load resistor installation detail this sheet.

★ See pictorial of head wiring in detail below.

FYA SIGNAL WIRING DETAIL

(wire signal heads as shown)

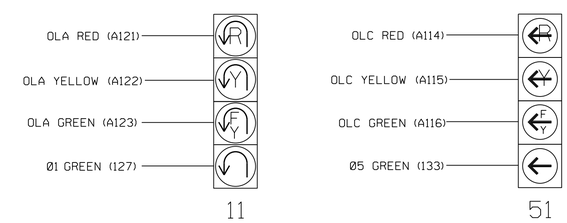

NOTE

The sequence display for signal heads 11 and 51 requires special logic programming. See sheet 2 for programming instructions.

INPUT FILE POSITION LAYOUT

(front view)

		1	2	3	4	5	6	7	8	9	10	11	12	13	14
FILE "I"	U	Ø 1	Ø 2	SLOT	WIRED ⊗ INPUT	SLOT	Ø 4	SLOT	SLOT	SLOT	SLOT	SLOT	SLOT	SLOT	FS
		1A	2A*	EMPTY		EMPTY	4A	EMPTY	EMPTY	EMPTY	EMPTY	EMPTY	EMPTY	EMPTY	DC ISOLATOR
	L	NOT USED	Ø 2				Ø 4								ST
			2B*				4B								DC ISOLATOR
FILE "J"	U	Ø 5	Ø 6	SLOT	WIRED ⊗ INPUT	SLOT		SLOT	SLOT	SLOT	SLOT	SLOT	SLOT	SLOT	SLOT
		5A	6A	EMPTY		EMPTY		EMPTY	EMPTY	EMPTY	EMPTY	EMPTY	EMPTY	EMPTY	EMPTY
	L	NOT USED	Ø 6												
			6B												

EX.: 1A, 2A, ETC. = LOOP NO.'S

FS = FLASH SENSE
ST = STOP TIME

⊗ Wired Input - Do not populate slot with detector card

*See Special Detector Note this sheet.

INPUT FILE CONNECTION & PROGRAMMING CHART

LOOP NO.	LOOP TERMINAL	INPUT FILE POS.	PIN NO.	INPUT ASSIGNMENT NO.	DETECTOR NO.	NEMA PHASE	CALL	EXTEND	FULL TIME DELAY	STRETCH TIME	DELAY TIME
1A[1]	TB2-1,2	I1U	56	18	1	1	Y	Y			15
	-	J4U	48	10	26	6	Y	Y	Y		3
4A	TB4-9,10	I6U	41	3	4	4	Y	Y			3
4B	TB4-11,12	I6L	45	7	14	4	Y	Y			15
5A[2]	TB3-1,2	J1U	55	17	5	5	Y	Y			15
	-	I4U	47	9	22	2	Y	Y	Y		3
6A	TB3-5,6	J2U	40	2	6	6	Y	Y			
6B	TB3-7,8	J2L	44	6	16	6	Y	Y			

[1] Add jumper from I1-W to J4-W, on rear of input file.

[2] Add jumper from J1-W to I4-W, on rear of input file.

INPUT FILE POSITION LEGEND: J2L
FILE J
SLOT 2
LOWER

LOAD RESISTOR INSTALLATION DETAIL

(install resistors as shown below)

ACCEPTABLE VALUES	
VALUE (ohms)	WATTAGE
1.5K - 1.9K	25W (min)
2.0K - 3.0K	10W (min)

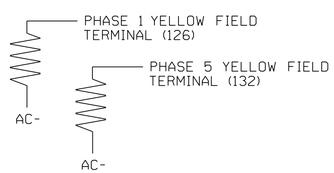

SPECIAL DETECTOR NOTE

Install a radar detection system for vehicle detection on Loops 2A and 2B. Perform installation according to manufacturer's directions and NCDOT engineer-approved mounting locations to accomplish the detection schemes shown on the Signal Design Plans.

Prepared by
URS
URS Corporation – North Carolina
1600 Perimeter Park Drive
Morrisville, North Carolina 27560
TELEPHONE (919) 461-1100 FAX (919) 461-1415
NC LICENSE • C-2243

THIS ELECTRICAL DETAIL IS FOR
THE SIGNAL DESIGN: 04-1241
DESIGNED: January 2018
SEALED: 5/25/2018
REVISED: N/A

Final Design
Electrical Detail - Sheet 1 of 2

DOCUMENT NOT CONSIDERED FINAL UNLESS ALL SIGNATURES COMPLETED

ELECTRICAL AND PROGRAMMING DETAILS FOR:

Prepared for the Offices of:
Intermodal Mobility and Safety Division
STATE OF NORTH CAROLINA
DEPARTMENT OF TRANSPORTATION
ITS & Signals Management Section
750 N.Greenfield Pkwy,Garner,NC 27529

NC 42
at
SR 1705 (Castleberry Road)

Division 4 Johnston County Clayton

PLAN DATE: January 2018	REVIEWED BY: J O Deaton
PREPARED BY: M W Yalch	REVIEWED BY:

REVISIONS	INIT.	DATE

NORTH CAROLINA PROFESSIONAL SEAL 07438 ENGINEER JAMES O. DEATON

DocuSigned by: James O Deaton 5/25/2018
40FF8AC430BD40F...

SIG. INVENTORY NO. 04-1241

5/25/2018
L:\Morrisville\Jobs\R3825B\Traffic\Signals\Electricals\04-1241fa-00-192.dgn
coxs1

DocuSign Envelope ID: EDEA80FB-80A3-45F4-B6C8-CD80310DC6C8

PROJECT REFERENCE NO.	SHEET NO.
R-3825B	Sig. 5.2

LOGICAL I/O PROCESSOR PROGRAMMING DETAIL
TO PRODUCE SPECIAL FYA-PPLT SIGNAL SEQUENCE

(program controller as shown below)

1. FROM MAIN MENU PRESS '2' (PHASE CONTROL), THEN '1' (PHASE CONTROL FUNCTIONS). SCROLL TO THE BOTTOM OF THE MENU AND ENABLE ACT LOGIC COMMANDS 1, 2, 3, 4, 5 AND 6.

2. FROM MAIN MENU PRESS '6' (OUTPUTS), THEN '3' (LOGICAL I/O PROCESSOR).

```
LOGICAL I/O COMMAND #1  (+/-COMMAND#)
IF  ACTIVE PHASE       #1  IS ON
AND RED CLEAR ON PHASE #1  IS ON

SCROLL DOWN

THEN:
SET OUTPUT  ASSIGNMENT #50 ON
SET OUTPUT  ASSIGNMENT #51 OFF
```

NOTE: LOGIC FOR PHASE 1 RED CLEAR WHEN TRANSITIONING FROM PHASE 1 TO PHASE 2 (HEAD 11).

PRESS '+'

```
LOGICAL I/O COMMAND #2  (+/-COMMAND#)
IF  ACTIVE PHASE       #1  IS ON

SCROLL DOWN

THEN:
SET OUTPUT  ASSIGNMENT #52 OFF
```

NOTE: LOGIC FOR SWITCHING FLASHING YELLOW ARROW "OFF" DURING PHASE 1 (HEAD 11).

PRESS '+'

```
LOGICAL I/O COMMAND #3  (+/-COMMAND#)
IF  YELLOW ON PHASE    #1  IS ON

SCROLL DOWN

THEN:
SET OUTPUT  ASSIGNMENT #51 ON
```

NOTE: LOGIC FOR YELLOW ARROW CLEARANCE FROM PHASE 1 (HEAD 11).

PRESS '+'

```
LOGICAL I/O COMMAND #4  (+/-COMMAND#)
IF  ACTIVE PHASE       #5  IS ON
AND RED CLEAR ON PHASE #5  IS ON

SCROLL DOWN

THEN:
SET OUTPUT  ASSIGNMENT #42 ON
SET OUTPUT  ASSIGNMENT #43 OFF
```

NOTE: LOGIC FOR PHASE 5 RED CLEAR WHEN TRANSITIONING FROM PHASE 5 TO PHASE 6 (HEAD 51).

PRESS '+'

```
LOGICAL I/O COMMAND #5  (+/-COMMAND#)
IF  ACTIVE PHASE       #5  IS ON

SCROLL DOWN

THEN:
SET OUTPUT  ASSIGNMENT #44 OFF
```

NOTE: LOGIC FOR SWITCHING FLASHING YELLOW ARROW "OFF" DURING PHASE 5 (HEAD 51).

PRESS '+'

```
LOGICAL I/O COMMAND #6  (+/-COMMAND#)
IF  YELLOW ON PHASE    #5  IS ON

SCROLL DOWN

THEN:
SET OUTPUT  ASSIGNMENT #43 ON
```

NOTE: LOGIC FOR YELLOW ARROW CLEARANCE FROM PHASE 5 (HEAD 51).

LOGIC I/O PROCESSOR PROGRAMMING COMPLETE

OUTPUT REFERENCE SCHEDULE

USE TO INTERPRET LOGIC PROCESSOR

OUTPUT 42 = Overlap C Red
OUTPUT 43 = Overlap C Yellow
OUTPUT 44 = Overlap C Green
OUTPUT 50 = Overlap A Red
OUTPUT 51 = Overlap A Yellow
OUTPUT 52 = Overlap A Green

OVERLAP PROGRAMMING DETAIL

(program controller as shown below)

FROM MAIN MENU PRESS '8' (OVERLAPS), THEN '1' (VEHICLE OVERLAP SETTINGS).

```
PAGE 1: VEHICLE OVERLAP 'A' SETTINGS
PHASE:          ¦123456789101112131415 16
VEH OVL PARENTS:¦XX
VEH OVL NOT VEH:¦
VEH OVL NOT PED:¦
VEH OVL GRN EXT:¦
STARTUP COLOR: _ RED  _ YELLOW  _ GREEN
FLASH COLORS:  _ RED  _ YELLOW  X GREEN
SELECT VEHICLE OVERLAP OPTIONS:   (Y/N)
FLASH YELLOW IN CONTROLLER FLASH?...Y
GREEN EXTENSION (0-255 SEC).........0
YELLOW CLEAR (0=PARENT,3-25.5 SEC)..0.0
RED CLEAR (0=PARENT,0.1-25.5 SEC)...0.0
OUTPUT AS PHASE # (0=NONE, 1-16)....0
```

← NOTICE GREEN FLASH

PRESS '+' TWICE

```
PAGE 1: VEHICLE OVERLAP 'C' SETTINGS
PHASE:          ¦123456789101112131415 16
VEH OVL PARENTS:¦    XX
VEH OVL NOT VEH:¦
VEH OVL NOT PED:¦
VEH OVL GRN EXT:¦
STARTUP COLOR: _ RED  _ YELLOW  _ GREEN
FLASH COLORS:  _ RED  _ YELLOW  X GREEN
SELECT VEHICLE OVERLAP OPTIONS:   (Y/N)
FLASH YELLOW IN CONTROLLER FLASH?...Y
GREEN EXTENSION (0-255 SEC).........0
YELLOW CLEAR (0=PARENT,3-25.5 SEC)..0.0
RED CLEAR (0=PARENT,0.1-25.5 SEC)...0.0
OUTPUT AS PHASE # (0=NONE, 1-16)....0
```

← NOTICE GREEN FLASH

OVERLAP PROGRAMMING COMPLETE

THIS ELECTRICAL DETAIL IS FOR
THE SIGNAL DESIGN: 04-1241
DESIGNED: January 2018
SEALED: 5/25/2018
REVISED: N/A

Final Design
Electrical Detail - Sheet 2 of 2

DOCUMENT NOT CONSIDERED FINAL UNLESS ALL SIGNATURES COMPLETED

Prepared by
URS
URS Corporation – North Carolina
1600 Perimeter Park Drive
Morrisville, North Carolina 27560
TELEPHONE (919) 461-1100 FAX (919) 461-1415
NC LICENSE • C-2243

ELECTRICAL AND PROGRAMMING DETAILS FOR:

Prepared for the Offices of:
Traffic Engineering Branch, Traffic Control Section, Traffic Signal Design and Mobility and Safety Division, Transportation Management Unit, Department of Transportation, State of North Carolina
750 N.Greenfield Pkwy,Garner,NC 27529

NC 42
at
SR 1705 (Castleberry Road)

Division 4 | Johnston County | Clayton

PLAN DATE:	January 2018	REVIEWED BY:	J O Deaton
PREPARED BY:	M W Yalch	REVIEWED BY:	

REVISIONS	INIT.	DATE

NORTH CAROLINA PROFESSIONAL SEAL 07438 ENGINEER JAMES O. DEATON

DocuSigned by: Damon O Deaton 5/25/2018
40FF8AC430BD40F...

SIG. INVENTORY NO. 04-1241

5/25/2018
L:\Morrisville\Jobs\R3825B\Traffic\Signals\Electricals\04-1241fe-00-192.dgn
Coxsi

DocuSign Envelope ID: EDEA80FB-80A3-45F4-B6C8-CD80310DC6C8

METAL POLE No. 1 and 2

PROJECT REFERENCE NO.	SHEET NO.
R-3825B	Sig.5.3

Design Loading for METAL POLE NO. 1

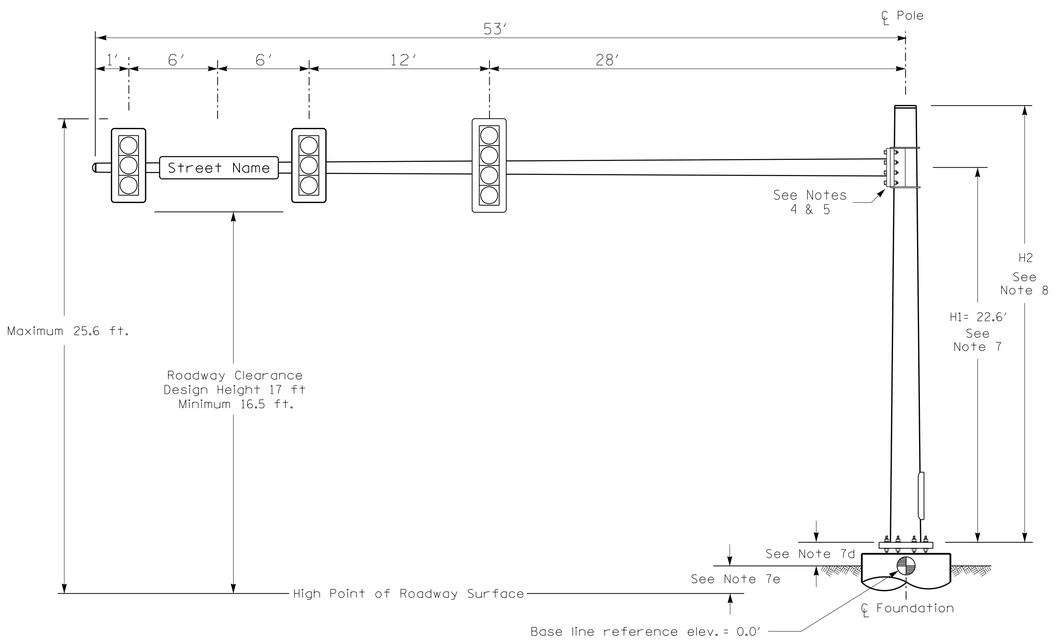

Elevation View

Design Loading for METAL POLE NO. 2

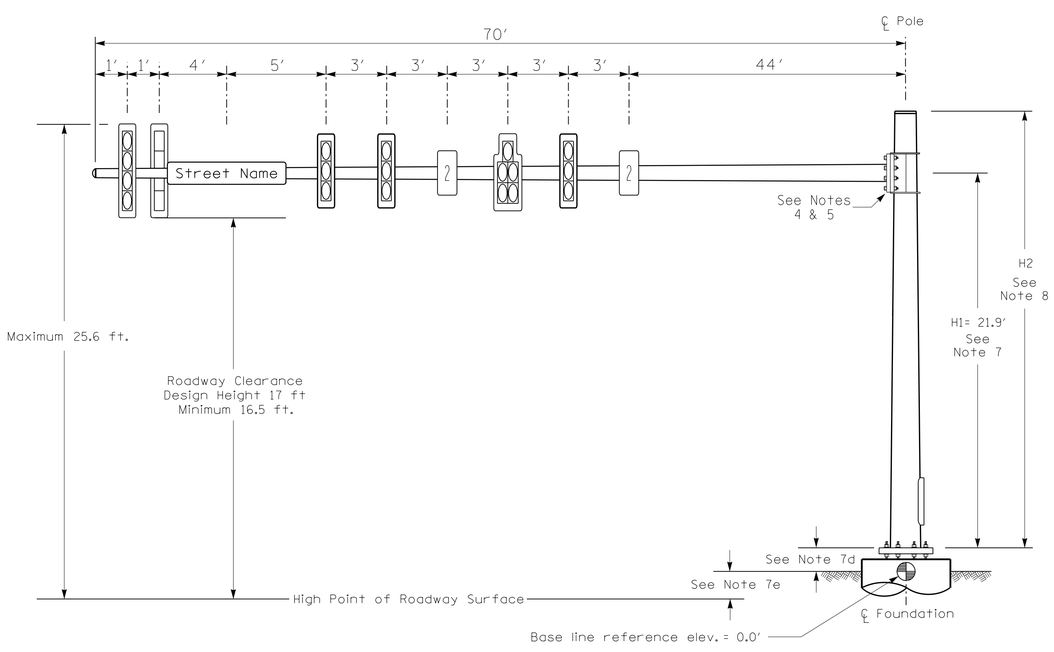

Elevation View

SPECIAL NOTE

The contractor is responsible for verifying that the mast arm attachment height (H1) will provide the "Design Height" clearance from the roadway before submitting final shop drawings for approval. Verify elevation data below which was obtained by field measurement or from available project survey data.

Elevation Data for Mast Arm Attachment (H1)

Elevation Differences for:	Pole 1	Pole 2
Baseline reference point at ℄ Foundation @ ground level	0.0 ft.	0.0 ft.
Elevation difference at High point of roadway surface	+3.5 ft.	+2.8 ft.
Elevation difference at Edge of travelway or face of curb	+1.9 ft.	+2.1 ft.

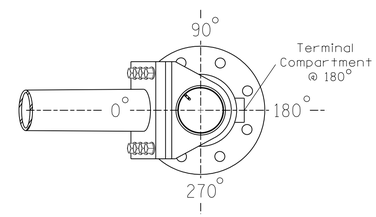

POLE RADIAL ORIENTATION

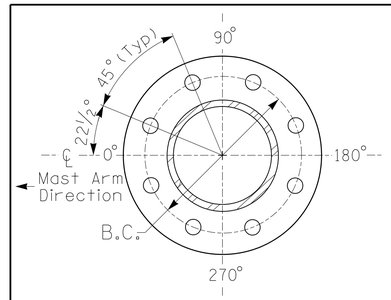

8 BOLT BASE PLATE DETAIL

See Note 6

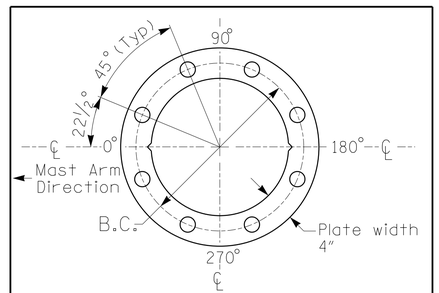

BASE PLATE TEMPLATE & ANCHOR BOLT LOCK PLATE DETAIL

For 8 Bolt Base Plate

MAST ARM LOADING SCHEDULE

LOADING SYMBOL	DESCRIPTION	AREA	SIZE	WEIGHT
	RIGID MOUNTED SIGNAL HEAD 12"-4 SECTION-WITH BACKPLATE	11.5 S.F.	25.5" W X 66.0" L	74 LBS
	RIGID MOUNTED SIGNAL HEAD 12"-3 SECTION-WITH BACKPLATE	9.3 S.F.	25.5" W X 52.5" L	60 LBS
	RIGID MOUNTED SIGNAL HEAD 12"-5 SECTION-WITH BACKPLATE	16.3 S.F.	42.0" W X 56.0" L	103 LBS
Street Name	STREET NAME SIGN RIGID MOUNTED	12.0 S.F.	18.0" W X 96.0" L	27 LBS
2	SIGN RIGID MOUNTED	7.5 S.F.	30.0" W X 36.0" L	14 LBS

NOTES

DESIGN REFERENCE MATERIAL

1. Design the traffic signal structure and foundation in accordance with:
   - The 6th Edition 2013 AASHTO "Standard Specifications for Structural Supports for Highway Signs, Luminaires, and Traffic Signals, including all of the latest interim revisions.
   - The 2018 NCDOT "Standard Specifications for Roads and Structures." The latest addenda to the specifications can be found in the traffic signal project special provisions.
   - The 2018 NCDOT Roadway Standard Drawings.
   - The traffic signal project plans and special provisions.
   - The NCDOT "Metal Pole Standards" located at the following NCDOT website: https://connect.ncdot.gov/resources/safety/Pages/ITS-Design-Resources.aspx

DESIGN REQUIREMENTS

2. Design the traffic signal structure using the loading conditions shown in the elevation views. These are anticipated worst case "design loads" and may not represent the actual loads that will be applied at the time of the installation. The contractor should refer to the traffic signal plans for the actual loads that will be applied at the time of the installation.
3. Design all signal supports using stress ratios that do not exceed 0.9.
4. The camber design for the mast arm deflection should provide an appearance of a low pitched arch where the tip or the free end of the mast arm does not deflect below horizontal when fully loaded.
5. A clamp-type bolted mast arm-to-pole connection may be used instead of the welded ring stiffened box connection shown as long as the connection meets all of the design requirements.
6. Design base plate with 8 anchor bolt holes. Provide 2 inch x 60 inch anchor bolts.
7. The mast arm attachment height (H1) shown is based on the following design assumptions:
   a. Mast arm slope and deflection are not considered in determining the arm attachment height as they are assumed to offset each other.
   b. Signal heads are rigidly mounted and vertically centered on the mast arm.
   c. The roadway clearance height for design is as shown in the elevation views.
   d. The top of the pole base plate is 0.75 feet above the ground elevation.
   e. Refer to the Elevation Data Chart for the elevation differences between the proposed foundation ground level and the high point of the roadway.
8. The pole manufacturer will determine the total height (H2) of each pole using the greater of the following:
   - Mast arm attachment height (H1) plus 2 feet, or
   - H1 plus 1/2 of the total height of the mast arm attachment assembly plus 1 foot.
9. If pole location adjustments are required, the contractor must gain approval from the Engineer as this may affect the mast arm lengths and arm attachment heights. The contractor may contact the Signal Design Section Senior Structural Engineer for assistance at (919) 814-5000.
10. The contractor is responsible for verifying that the mast arm length shown will allow proper positioning of the signal heads over the roadway.
11. The contractor is responsible for providing soil penetration testing data (SPT) to the pole manufacturer so site specific foundations can be designed.

All metal poles and arms should be black in color as specified in the project special provisions.

Prepared by
URS
URS Corporation – North Carolina
1600 Perimeter Park Drive
Morrisville, North Carolina 27560
TELEPHONE: (919) 461-1100 FAX: (919) 461-1415
NC LICENSE • C-2243

DOCUMENT NOT CONSIDERED FINAL UNLESS ALL SIGNATURES COMPLETED

NCDOT Wind Zone 3 (110 mph)

Prepared for the Offices of:
Transportation Mobility and Safety Division
Signal Design Section
750 N.Greenfield Pkwy,Garner,NC 27529

NC 42
at
SR 1705 (Castleberry Road)

Division 4 Johnston County Clayton

PLAN DATE:	January 2018	REVIEWED BY:	C. L. Kalencik
PREPARED BY:	S. W. Cox	REVIEWED BY:	

SCALE 0 N/A N/A

REVISIONS	INIT.	DATE

NORTH CAROLINA PROFESSIONAL SEAL 040715 ENGINEER COURTNEY L. KALENCIK

DocuSigned by: Courtney L. Kalencik 5/25/2018
DFE9158CE2864FE...

SIG. INVENTORY NO. 04-1241

5/25/2018
L:\Projects\Willie%Jobs\R3825B\Traffic\Signals\041241_date_m1&m2.dgn
COXSI

DocuSign Envelope ID: EDEA80FB-80A3-45F4-B6C8-CD80310DC6C8

PROJECT REFERENCE NO.	SHEET NO.
R-3825B	Sig.6.0

PHASING DIAGRAM

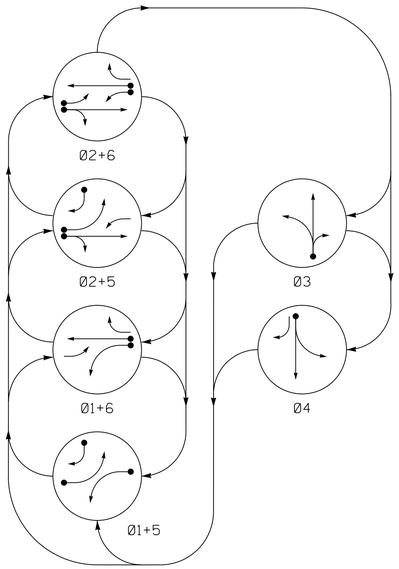

PHASING DIAGRAM DETECTION LEGEND

- DETECTED MOVEMENT
- UNDETECTED MOVEMENT (OVERLAP)
- UNSIGNALIZED MOVEMENT
- PEDESTRIAN MOVEMENT

TABLE OF OPERATION

SIGNAL FACE	PHASE Ø1+5	Ø1+6	Ø2+5	Ø2+6	Ø3	Ø4	FLASH
11	←	←	F Y	F Y	R	R	Y
21, 22	R	R	G	G	R	R	Y
31	R	R	R	R	G ←	R	R
32	R	R	R	R	G	R	R
41	R	R	R	R	R	G ←	R
42	R →	R	R →	R	R	G	R
51	←	F Y	←	F Y	R	R	Y
61, 62	R	G	R	G	R	R	Y

SIGNAL FACE I.D.

All Heads L.E.D.

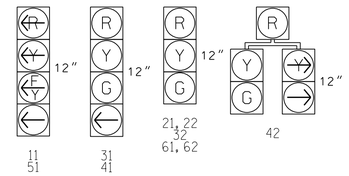

OASIS 2070 LOOP & DETECTOR INSTALLATION CHART

INDUCTIVE LOOPS					DETECTOR PROGRAMMING						
LOOP	SIZE (FT)	DISTANCE FROM STOPBAR (FT)	TURNS	NEW LOOP	PHASE	CALLING	EXTENSION	FULL TIME DELAY	STRETCH TIME	DELAY TIME	SYSTEM LOOP	NEW CARD
1A	6X40	0	*	Y	1	Y	Y	-	-	15	-	*
					6	Y	Y	Y	-	3	-	*
2A	6X6	420	*	Y	2	Y	Y	-	-	-	-	*
2B	6X40	0	*	Y	2	Y	Y	Y	2.0	5	-	*
3A	6X40	0	*	Y	3	Y	Y	-	-	10	-	*
3B	6X6	0	*	Y	3	Y	Y	-	-	15	-	*
4A	6X40	0	*	Y	4	Y	Y	-	-	-	-	*
5A	6X40	0	*	Y	5	Y	Y	-	-	15	-	*
					2	Y	Y	Y	-	3	-	*
5B	6X40	0	*	Y	5	Y	Y	-	-	15	-	*
6A	6X6	420	*	Y	6	Y	Y	-	-	-	-	*
6B	6X40	0	*	Y	6	Y	Y	Y	2.0	5	-	*

* Video Detection Zone

6 Phase
Fully Actuated
Isolated

NOTES

1. Refer to "Roadway Standard Drawings NCDOT" dated January 2018, "Standard Specifications for Roads and Structures" dated January 2018.
2. Do not program signal for late night flashing operation unless otherwise directed by the Engineer.
3. Phase 1 and/or phase 5 may be lagged.
4. The order of phase 3 and phase 4 may be reversed.
5. Set all detector units to presence mode.
6. Locate new cabinet so as not to obstruct sight distance of vehicles turning right on red.

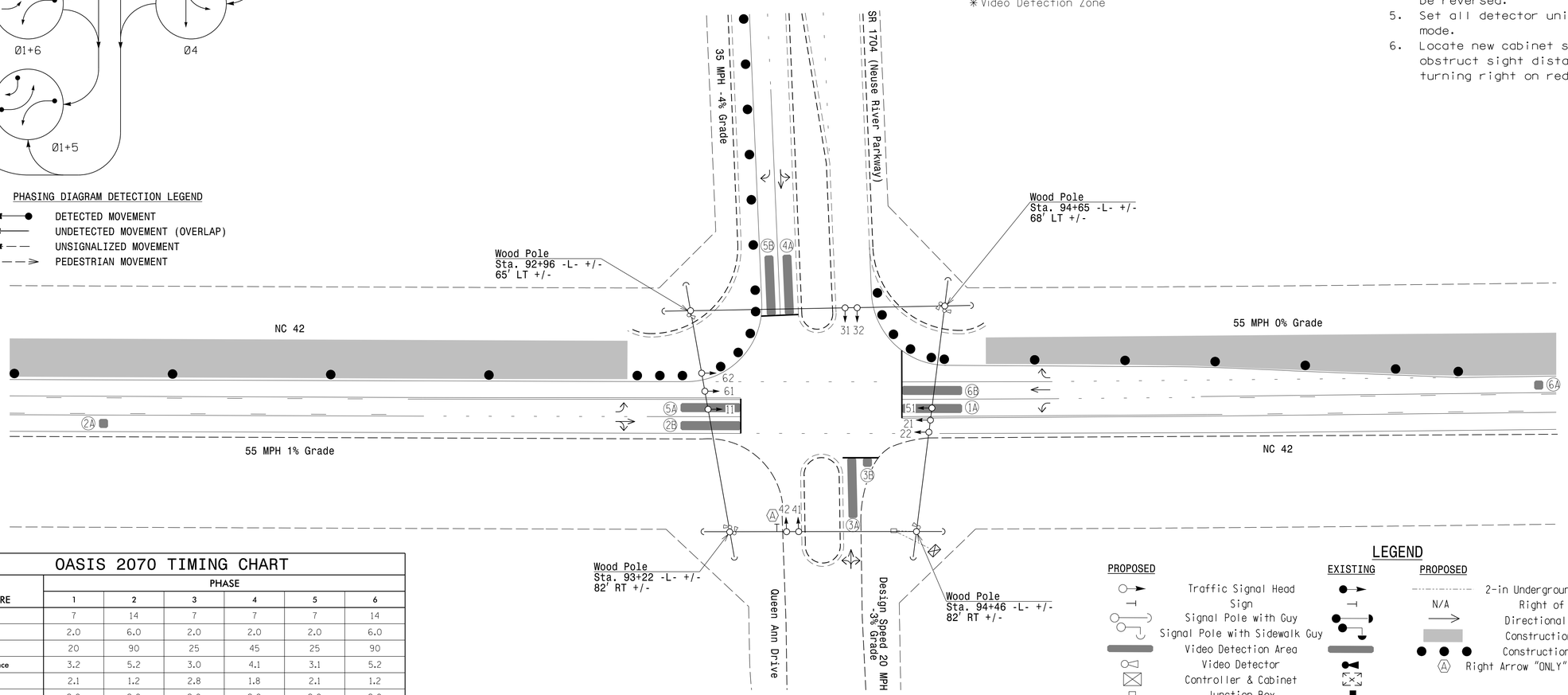

OASIS 2070 TIMING CHART

FEATURE	PHASE 1	2	3	4	5	6
Min Green 1 *	7	14	7	7	7	14
Extension 1	2.0	6.0	2.0	2.0	2.0	6.0
Max Green 1 *	20	90	25	45	25	90
Yellow Clearance	3.2	5.2	3.0	4.1	3.1	5.2
Red Clearance	2.1	1.2	2.8	1.8	2.1	1.2
Red Revert	2.0	2.0	2.0	2.0	2.0	2.0
Walk 1 *	-	-	-	-	-	-
Don't Walk 1	-	-	-	-	-	-
Seconds Per Actuation *	-	-	-	-	-	-
Max Variable Initial *	-	-	-	-	-	-
Time Before Reduction *	-	15	-	-	-	15
Time To Reduce *	-	30	-	-	-	30
Minimum Gap	-	3.4	-	-	-	3.4
Recall Mode	-	MIN RECALL	-	-	-	MIN RECALL
Vehicle Call Memory	-	-	-	-	-	-
Dual Entry	-	-	-	-	-	-
Simultaneous Gap	ON	ON	ON	ON	ON	ON

* These values may be field adjusted. Do not adjust Min Green and Extension times for phases 2 and 6 lower than what is shown. Min Green for all other phases should not be lower than 4 seconds.

LEGEND

PROPOSED		EXISTING	PROPOSED		EXISTING
	Traffic Signal Head			2-in Underground Conduit	
	Sign		N/A	Right of Way	
	Signal Pole with Guy			Directional Arrow	
	Signal Pole with Sidewalk Guy			Construction Zone	
	Video Detection Area			Construction Drums	N/A
	Video Detector		A	Right Arrow "ONLY" Sign (R3-5R)	A
	Controller & Cabinet				
	Junction Box				
	Oversized Junction Box				

Signal Upgrade - Temporary Design 1 (TMP Phase 1)

DOCUMENT NOT CONSIDERED FINAL UNLESS ALL SIGNATURES COMPLETED

Prepared for the Offices of:
Transportation Mobility and Safety Division
STATE OF NORTH CAROLINA DEPARTMENT OF TRANSPORTATION
Signal Design Section
750 N.Greenfield Pkwy,Garner,NC 27529

NC 42
at
SR 1704 (Neuse River Parkway)/
Queen Ann Drive

Division 4 Johnston County Clayton

PLAN DATE: January 2018 REVIEWED BY: C. L. Kalencik
PREPARED BY: S. W. Cox REVIEWED BY:

SCALE 0 40 1"=40'

REVISIONS	INIT.	DATE

NORTH CAROLINA PROFESSIONAL SEAL 040715 ENGINEER COURTNEY L. KALENCIK

DocuSigned by: Courtney L. Kalencik 5/25/2018
0FE9158CE2864FE...

SIG. INVENTORY NO. 04-1412TI

Prepared by
URS
URS Corporation – North Carolina
1600 Perimeter Park Drive
Morrisville, North Carolina 27560
TELEPHONE (919) 461-1100 FAX (919) 461-1415
NC LICENSE • C-2243

5/25/2018
L:\Work\Raleigh\Jobs\R3825B\Traffic\Signals\04141211.sig.dsn.dgn
cox51

DocuSign Envelope ID: EDEA80FB-80A3-45F4-B6C8-CD80310DC6C8

PROJECT REFERENCE NO.	SHEET NO.
R-3825B	Sig. 6.1

EDI MODEL 2018ECL-NC CONFLICT MONITOR PROGRAMMING DETAIL

(remove jumpers and set switches as shown)

REMOVE DIODE JUMPERS I-5, I-6, I-9, I-11, 2-5, 2-6, 2-9, 2-11, 5-9, 5-11, 6-9, 6-11 AND 9-11.

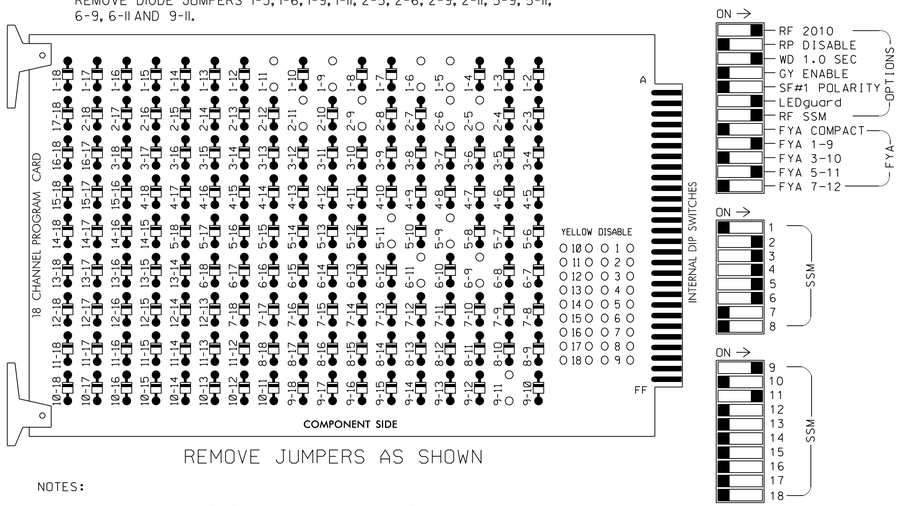

REMOVE JUMPERS AS SHOWN

NOTES:

1. Card is provided with all diode jumpers in place. Removal of any jumper allows its channels to run concurrently.
2. Ensure jumpers SEL2-SEL5 and SEL9 are present on the monitor board.
3. Ensure that Red Enable is active at all times during normal operation.
4. Connect serial cable from conflict monitor to comm. port 1 of 2070 controller. Ensure conflict monitor communicates with 2070.

NOTES

1. To prevent "flash-conflict" problems, insert red flash program blocks for all unused vehicle load switches in the output file. The installer shall verify that signal heads flash in accordance with the Signal Plans.
2. Enable Simultaneous Gap-Out for all phases.
3. Program phases 2 and 6 for Gap Reduction.
4. Program phases 2 and 6 for Start Up In Green.
5. Program phases 2 and 6 for Yellow Flash and overlap 1 as Wag Overlaps.

EQUIPMENT INFORMATION

CONTROLLER.....2070
CABINET.....332 W/ AUX
SOFTWARE.....ECONOLITE OASIS
CABINET MOUNT.....BASE
OUTPUT FILE POSITIONS...18 WITH AUX. OUTPUT FILE
LOAD SWITCHES USED.....S1,S2,S4,S5,S7,S8, AUX S1,AUX S4
PHASES USED.....1,2,3,4,5,6
OVERLAP "A".....1+2
OVERLAP "B".....NOT USED
OVERLAP "C".....5+6
OVERLAP "D".....NOT USED

SIGNAL HEAD HOOK-UP CHART

LOAD SWITCH NO.	S1	S2	S3	S4		S5		S6	S7		S8	S9	S10	S11	S12	AUX S1	AUX S2	AUX S3	AUX S4	AUX S5	AUX S6
CMU CHANNEL NO.	1	2	13	3		4		14	5		6	15	7	8	16	9	10	17	11	12	18
PHASE	1	2	2 PED	3		4		4 PED	5		6	6 PED	7	8	8 PED	OLA	OLB	SPARE	OLC	OLD	SPARE
SIGNAL HEAD NO.	11★	21,22	NU	31	32	41	42	NU	42	51★	61,62	NU	NU	NU	NU	11★	NU	NU	51★	NU	NU
RED		128		116	116	101	101		✳		134										
YELLOW	✳	129		117	117	102	102				135										
GREEN		130		118	118	103	103				136										
RED ARROW																A121			A114		
YELLOW ARROW									132							A122			A115		
FLASHING YELLOW ARROW																A123			A116		
GREEN ARROW	127			118		103			133	133											

NU = Not Used

✳ Denotes install load resistor. See load resistor installation detail this sheet.

★ See pictorial of head wiring in detail below.

FYA SIGNAL WIRING DETAIL

(wire signal heads as shown)

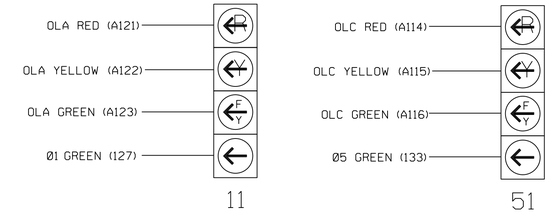

NOTE

The sequence display for signal heads 11 and 51 requires special logic programming. See sheet 2 for programming instructions.

INPUT FILE POSITION LAYOUT

(front view)

		1	2	3	4	5	6	7	8	9	10	11	12	13	14
FILE "I"	U	SLOT EMPTY	SLOT EMPTY	SLOT EMPTY	SLOT EMPTY	SLOT EMPTY	SLOT EMPTY	SLOT EMPTY	SLOT EMPTY	SLOT EMPTY	SLOT EMPTY	SLOT EMPTY	SLOT EMPTY	SLOT EMPTY	FS DC ISOLATOR
	L														ST DC ISOLATOR
FILE "J"	U	SLOT EMPTY	SLOT EMPTY	SLOT EMPTY	SLOT EMPTY	SLOT EMPTY	SLOT EMPTY	SLOT EMPTY	SLOT EMPTY	SLOT EMPTY	SLOT EMPTY	SLOT EMPTY	SLOT EMPTY	SLOT EMPTY	SLOT EMPTY
	L														

EX.: 1A, 2A, ETC. = LOOP NO.'S

FS = FLASH SENSE
ST = STOP TIME

INPUT FILE POSITION LEGEND: J2L
FILE J
SLOT 2
LOWER

SPECIAL DETECTOR NOTE

Install a video detection system for vehicle detection. Perform installation according to manufacturer's directions and NCDOT engineer-approved mounting locations to accomplish the detection schemes shown on the Signal Design Plans.

LOAD RESISTOR INSTALLATION DETAIL

(install resistors as shown below)

ACCEPTABLE VALUES

VALUE (ohms)	WATTAGE
1.5K - 1.9K	25W (min)
2.0K - 3.0K	10W (min)

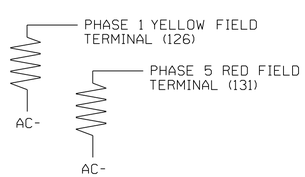

THIS ELECTRICAL DETAIL IS FOR THE SIGNAL DESIGN: 04-1412T1
DESIGNED: January 2018
SEALED: 5/25/2018
REVISED: N/A

Temporary Design 1 (TMP Phase 1)
Electrical Detail - Sheet 1 of 2

DOCUMENT NOT CONSIDERED FINAL UNLESS ALL SIGNATURES COMPLETED

ELECTRICAL AND PROGRAMMING DETAILS FOR:

NC 42
at
SR 1704 (Neuse River Parkway)/ Queen Ann Drive

Division 4 Johnston County Clayton

PLAN DATE: January 2018	REVIEWED BY: J O Deaton		
PREPARED BY: M W Yalch	REVIEWED BY:		
REVISIONS		INIT.	DATE

Prepared for the Offices of:
Traffic Engineering Mobility and Safety Division
Signals Management Section
750 N.Greenfield Pkwy,Garner,NC 27529

Prepared by
URS
URS Corporation – North Carolina
1600 Perimeter Park Drive
Morrisville, North Carolina 27560
TELEPHONE (919) 461-1100 FAX (919) 461-1415
NC LICENSE • C-2243

NORTH CAROLINA PROFESSIONAL SEAL 07438 ENGINEER JAMES O. DEATON

DocuSigned by: James O Deaton 49FF8AC430BD40F... 5/25/2018

SIG. INVENTORY NO. 04-1412T1

5/25/2018
L:\Morrisville\Jobs\R3825B\Traffic\Signals\Electricals\04-1412T1e-00-192.dgn
coxst

DocuSign Envelope ID: EDEA80FB-80A3-45F4-B6C8-CD80310DC6C8

PROJECT REFERENCE NO.	SHEET NO.
R-3825B	Sig. 6.2

LOGICAL I/O PROCESSOR PROGRAMMING DETAIL
TO PRODUCE SPECIAL FYA-PPLT SIGNAL SEQUENCE

(program controller as shown below)

1. FROM MAIN MENU PRESS '2' (PHASE CONTROL), THEN '1' (PHASE CONTROL FUNCTIONS). SCROLL TO THE BOTTOM OF THE MENU AND ENABLE ACT LOGIC COMMANDS 1, 2, 3, 4, 5 AND 6.

2. FROM MAIN MENU PRESS '6' (OUTPUTS), THEN '3' (LOGICAL I/O PROCESSOR).

```
LOGICAL I/O COMMAND #1  (+/-COMMAND#)
IF  ACTIVE PHASE       #1  IS ON
AND RED CLEAR ON PHASE #1  IS ON

            SCROLL DOWN

THEN:
SET OUTPUT  ASSIGNMENT #50 ON
SET OUTPUT  ASSIGNMENT #51 OFF
```

NOTE: LOGIC FOR PHASE 1 RED CLEAR WHEN TRANSITIONING FROM PHASE 1 TO PHASE 2 (HEAD 11).

PRESS '+'

```
LOGICAL I/O COMMAND #2  (+/-COMMAND#)
IF  ACTIVE PHASE       #1  IS ON

            SCROLL DOWN

THEN:
SET OUTPUT  ASSIGNMENT #52 OFF
```

NOTE: LOGIC FOR SWITCHING FLASHING YELLOW ARROW "OFF" DURING PHASE 1 (HEAD 11).

PRESS '+'

```
LOGICAL I/O COMMAND #3  (+/-COMMAND#)
IF  YELLOW ON PHASE    #1  IS ON

            SCROLL DOWN

THEN:
SET OUTPUT  ASSIGNMENT #51 ON
```

NOTE: LOGIC FOR YELLOW ARROW CLEARANCE FROM PHASE 1 (HEAD 11).

PRESS '+'

```
LOGICAL I/O COMMAND #4  (+/-COMMAND#)
IF  ACTIVE PHASE       #5  IS ON
AND RED CLEAR ON PHASE #5  IS ON

            SCROLL DOWN

THEN:
SET OUTPUT  ASSIGNMENT #42 ON
SET OUTPUT  ASSIGNMENT #43 OFF
```

NOTE: LOGIC FOR PHASE 5 RED CLEAR WHEN TRANSITIONING FROM PHASE 5 TO PHASE 6 (HEAD 51).

PRESS '+'

```
LOGICAL I/O COMMAND #5  (+/-COMMAND#)
IF  ACTIVE PHASE       #5  IS ON

            SCROLL DOWN

THEN:
SET OUTPUT  ASSIGNMENT #44 OFF
```

NOTE: LOGIC FOR SWITCHING FLASHING YELLOW ARROW "OFF" DURING PHASE 5 (HEAD 51).

PRESS '+'

```
LOGICAL I/O COMMAND #6  (+/-COMMAND#)
IF  YELLOW ON PHASE    #5  IS ON

            SCROLL DOWN

THEN:
SET OUTPUT  ASSIGNMENT #43 ON
```

NOTE: LOGIC FOR YELLOW ARROW CLEARANCE FROM PHASE 5 (HEAD 51).

LOGIC I/O PROCESSOR PROGRAMMING COMPLETE

OUTPUT REFERENCE SCHEDULE

USE TO INTERPRET LOGIC PROCESSOR

OUTPUT 42 = Overlap C Red
OUTPUT 43 = Overlap C Yellow
OUTPUT 44 = Overlap C Green
OUTPUT 50 = Overlap A Red
OUTPUT 51 = Overlap A Yellow
OUTPUT 52 = Overlap A Green

OVERLAP PROGRAMMING DETAIL

(program controller as shown below)

FROM MAIN MENU PRESS '8' (OVERLAPS), THEN '1' (VEHICLE OVERLAP SETTINGS).

```
PAGE 1: VEHICLE OVERLAP 'A' SETTINGS
 PHASE:          :123456789101112131415 16
VEH OVL PARENTS::XX
VEH OVL NOT VEH::
VEH OVL NOT PED::
VEH OVL GRN EXT::
STARTUP COLOR: _ RED  _ YELLOW  _ GREEN
FLASH COLORS:  _ RED  _ YELLOW  X GREEN
SELECT VEHICLE OVERLAP OPTIONS:   (Y/N)
FLASH YELLOW IN CONTROLLER FLASH?...Y
GREEN EXTENSION (0-255 SEC).........0
YELLOW CLEAR (0=PARENT,3-25.5 SEC)..0.0
RED CLEAR (0=PARENT,0.1-25.5 SEC)...0.0
OUTPUT AS PHASE # (0=NONE, 1-16)....0
```

← NOTICE GREEN FLASH

PRESS '+' TWICE

```
PAGE 1: VEHICLE OVERLAP 'C' SETTINGS
 PHASE:          :123456789101112131415 16
VEH OVL PARENTS::   XX
VEH OVL NOT VEH::
VEH OVL NOT PED::
VEH OVL GRN EXT::
STARTUP COLOR: _ RED  _ YELLOW  _ GREEN
FLASH COLORS:  _ RED  _ YELLOW  X GREEN
SELECT VEHICLE OVERLAP OPTIONS:   (Y/N)
FLASH YELLOW IN CONTROLLER FLASH?...Y
GREEN EXTENSION (0-255 SEC).........0
YELLOW CLEAR (0=PARENT,3-25.5 SEC)..0.0
RED CLEAR (0=PARENT,0.1-25.5 SEC)...0.0
OUTPUT AS PHASE # (0=NONE, 1-16)....0
```

← NOTICE GREEN FLASH

OVERLAP PROGRAMMING COMPLETE

THIS ELECTRICAL DETAIL IS FOR
THE SIGNAL DESIGN: 04-1412T1
DESIGNED: January 2018
SEALED: 5/25/2018
REVISED: N/A

Temporary Design 1 (TMP Phase 1)
Electrical Detail - Sheet 2 of 2

DOCUMENT NOT CONSIDERED FINAL UNLESS ALL SIGNATURES COMPLETED

Prepared by
URS
URS Corporation – North Carolina
1600 Perimeter Park Drive
Morrisville, North Carolina 27560
TELEPHONE (919) 461-1100 FAX (919) 461-1415
NC LICENSE # C-2243

ELECTRICAL AND PROGRAMMING DETAILS FOR:

Prepared for the Offices of:
Intelligent Transportation Mobility and Safety Division
State of North Carolina
Department of Transportation
Traffic Engineering & Signals Management Section
750 N.Greenfield Pkwy,Garner,NC 27529

NC 42
at
SR 1704 (Neuse River Parkway)/
Queen Ann Drive

Division 4 Johnston County Clayton

PLAN DATE: January 2018	REVIEWED BY: J O Deaton		
PREPARED BY: M W Yalch	REVIEWED BY:		
REVISIONS		INIT.	DATE

NORTH CAROLINA PROFESSIONAL SEAL 07438 ENGINEER JAMES O. DEATON

DocuSigned by: James O Deaton 40FF8AC430BD40F... 5/25/2018

SIG. INVENTORY NO. 04-1412T1

5/25/2018
L:\Morrisville\Jobs\R3825B\Traffic\Signals\Electricals\04-1412tte-00-192.dgn
cons1

DocuSign Envelope ID: EDEA80FB-80A3-45F4-B6C8-CD80310DC6C8

PROJECT REFERENCE NO.	SHEET NO.
R-3825B	Sig.7.0

PHASING DIAGRAM

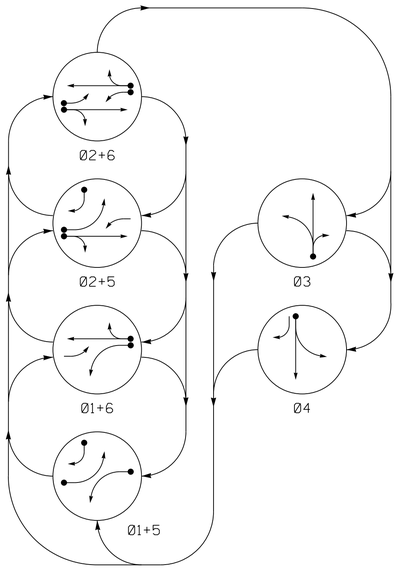

PHASING DIAGRAM DETECTION LEGEND

- DETECTED MOVEMENT
- UNDETECTED MOVEMENT (OVERLAP)
- UNSIGNALIZED MOVEMENT
- PEDESTRIAN MOVEMENT

TABLE OF OPERATION

SIGNAL FACE	PHASE Ø1+5	Ø1+6	Ø2+5	Ø2+6	Ø3	Ø4	FLASH
11	←	←	F Y	F Y	R	R	Y
21, 22	R	R	G	G	R	R	Y
31	R	R	R	R	G ←	R	R
32	R	R	R	R	G	R	R
41	R	R	R	R	R	G ←	R
42	R →	R	R →	R	R	G	R
51	←	F Y	←	F Y	R	R	Y
61, 62	R	G	R	G	R	R	Y

SIGNAL FACE I.D.

All Heads L.E.D.

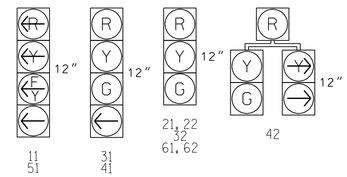

OASIS 2070 LOOP & DETECTOR INSTALLATION CHART

INDUCTIVE LOOPS					DETECTOR PROGRAMMING						
LOOP	SIZE (FT)	DISTANCE FROM STOPBAR (FT)	TURNS	NEW LOOP	PHASE	CALLING	EXTENSION	FULL TIME DELAY	STRETCH TIME	DELAY TIME	SYSTEM LOOP	NEW CARD
1A	6X40	0	✳	Y	1	Y	Y	-	-	15	-	✳
					6	Y	Y	Y	-	3	-	✳
2A	6X6	420	✳	Y	2	Y	Y	-	-	-	-	✳
2B	6X40	0	✳	Y	2	Y	Y	Y	2.0	5	-	✳
3A	6X40	0	✳	-	3	Y	Y	-	-	10	-	✳
4A	6X40	0	✳	-	4	Y	Y	-	-	-	-	✳
5A	6X40	0	✳	Y	5	Y	Y	-	-	15	-	✳
					2	Y	Y	Y	-	3	-	✳
5B	6X40	0	✳	-	5	Y	Y	-	-	15	-	✳
6A	6X6	420	✳	Y	6	Y	Y	-	-	-	-	✳
6B	6X40	0	✳	Y	6	Y	Y	Y	2.0	5	-	✳

✳ Video Detection Zone

6 Phase
Fully Actuated
Isolated

NOTES

1. Refer to "Roadway Standard Drawings NCDOT" dated January 2018, "Standard Specifications for Roads and Structures" dated January 2018.
2. Do not program signal for late night flashing operation unless otherwise directed by the Engineer.
3. Phase 1 and/or phase 5 may be lagged.
4. The order of phase 3 and phase 4 may be reversed.
5. Reposition existing signal heads numbered 11, 21, 22, 51, 61 and 62.
6. Set all detector units to presence mode.

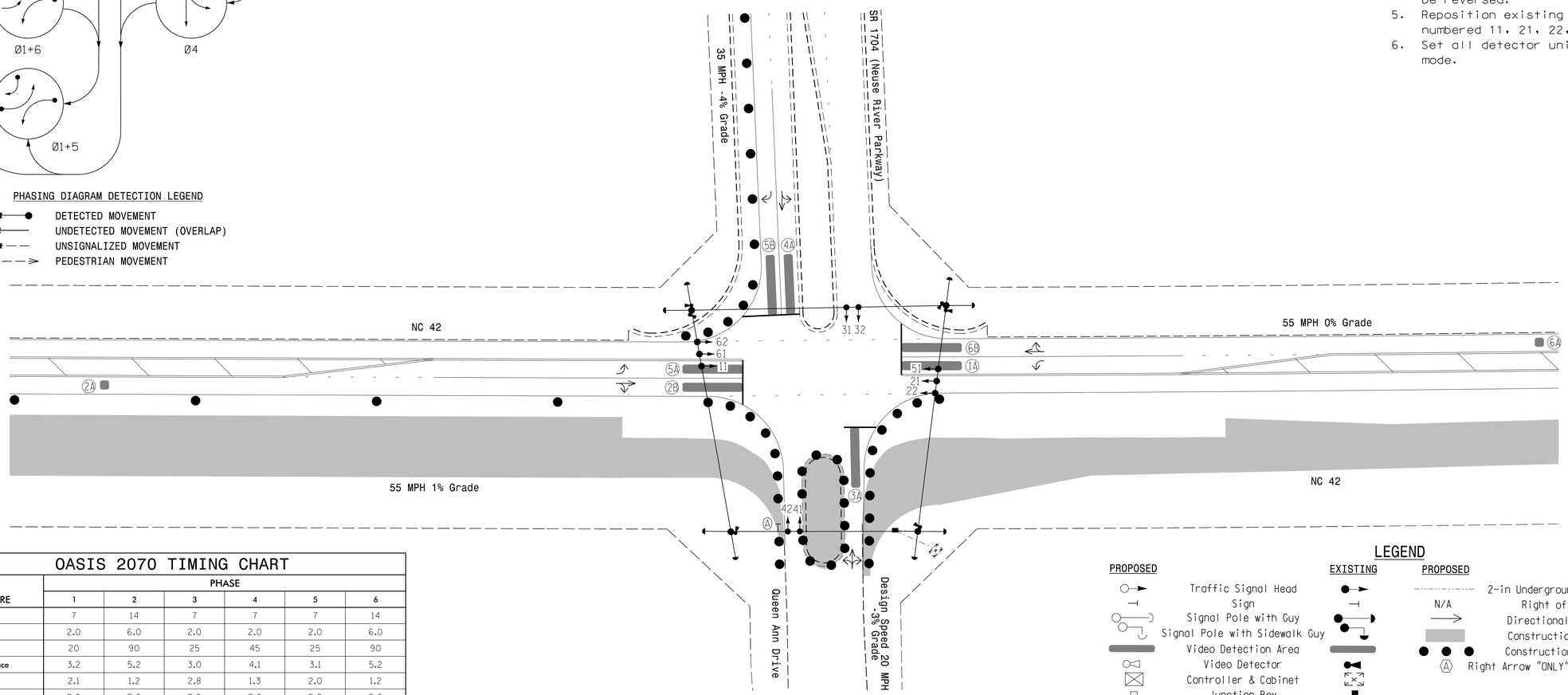

OASIS 2070 TIMING CHART

FEATURE	PHASE 1	2	3	4	5	6
Min Green 1 *	7	14	7	7	7	14
Extension 1	2.0	6.0	2.0	2.0	2.0	6.0
Max Green 1 *	20	90	25	45	25	90
Yellow Clearance	3.2	5.2	3.0	4.1	3.1	5.2
Red Clearance	2.1	1.2	2.8	1.3	2.0	1.2
Red Revert	2.0	2.0	2.0	2.0	2.0	2.0
Walk 1 *	-	-	-	-	-	-
Don't Walk 1	-	-	-	-	-	-
Seconds Per Actuation *	-	-	-	-	-	-
Max Variable Initial *	-	-	-	-	-	-
Time Before Reduction *	-	15	-	-	-	15
Time To Reduce *	-	30	-	-	-	30
Minimum Gap	-	3.4	-	-	-	3.4
Recall Mode	-	MIN RECALL	-	-	-	MIN RECALL
Vehicle Call Memory	-	-	-	-	-	-
Dual Entry	-	-	-	-	-	-
Simultaneous Gap	ON	ON	ON	ON	ON	ON

* These values may be field adjusted. Do not adjust Min Green and Extension times for phases 2 and 6 lower than what is shown. Min Green for all other phases should not be lower than 4 seconds.

LEGEND

PROPOSED		EXISTING	PROPOSED		EXISTING
	Traffic Signal Head			2-in Underground Conduit	
	Sign		N/A	Right of Way	
	Signal Pole with Guy			Directional Arrow	
	Signal Pole with Sidewalk Guy			Construction Zone	
	Video Detection Area			Construction Drums	N/A
	Video Detector		A	Right Arrow "ONLY" Sign (R3-5R)	A
	Controller & Cabinet				
	Junction Box				
	Oversized Junction Box				

Signal Upgrade - Temporary Design 2 (TMP Phase 1)

DOCUMENT NOT CONSIDERED FINAL UNLESS ALL SIGNATURES COMPLETED

Prepared by
URS
URS Corporation – North Carolina
1600 Perimeter Park Drive
Morrisville, North Carolina 27560
TELEPHONE (919) 461-1100 FAX (919) 461-1415
NC LICENSE • C-2243

Prepared for the Offices of:
Transportation Mobility and Safety Division
STATE OF NORTH CAROLINA DEPT. OF TRANSPORTATION
Signal Design Section
750 N.Greenfield Pkwy,Garner,NC 27529

NC 42
at
SR 1704 (Neuse River Parkway)/
Queen Ann Drive

Division 4 Johnston County Clayton

PLAN DATE: January 2018	REVIEWED BY: C. L. Kalencik
PREPARED BY: S. W. Cox	REVIEWED BY:

SCALE 0 40 1"=40'

REVISIONS	INIT.	DATE

NORTH CAROLINA PROFESSIONAL SEAL 040715 ENGINEER COURTNEY L. KALENCIK

DocuSigned by: Courtney L. Kalencik 5/25/2018
0FE9158CE2964FE...

SIG. INVENTORY NO. 04-141272

5/25/2018
L:\Projects\Raleigh\R3825B\Traffic\Signals\04141272_sig_dsn_date.dgn
COXSI

DocuSign Envelope ID: EDEA80FB-80A3-45F4-B6C8-CD80310DC6C8

PROJECT REFERENCE NO.	SHEET NO.
R-3825B	Sig. 7.1

EDI MODEL 2018ECL-NC CONFLICT MONITOR PROGRAMMING DETAIL

(remove jumpers and set switches as shown)

REMOVE DIODE JUMPERS I-5, I-6, I-9, I-11, 2-5, 2-6, 2-9, 2-11, 5-9, 5-11, 6-9, 6-11 AND 9-11.

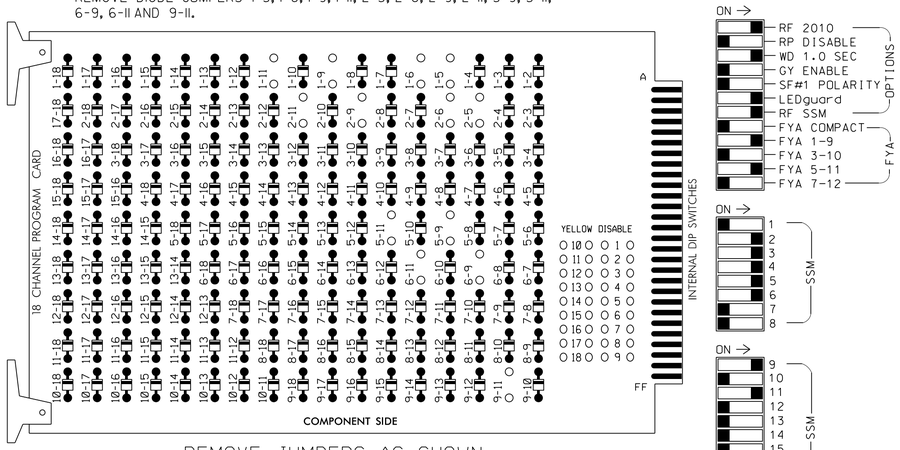

REMOVE JUMPERS AS SHOWN

NOTES:

1. Card is provided with all diode jumpers in place. Removal of any jumper allows its channels to run concurrently.
2. Ensure jumpers SEL2-SEL5 and SEL9 are present on the monitor board.
3. Ensure that Red Enable is active at all times during normal operation.
4. Connect serial cable from conflict monitor to comm. port 1 of 2070 controller. Ensure conflict monitor communicates with 2070.

NOTES

1. To prevent "flash-conflict" problems, insert red flash program blocks for all unused vehicle load switches in the output file. The installer shall verify that signal heads flash in accordance with the Signal Plans.
2. Enable Simultaneous Gap-Out for all phases.
3. Program phases 2 and 6 for Gap Reduction.
4. Program phases 2 and 6 for Start Up In Green.
5. Program phases 2 and 6 for Yellow Flash and overlap 1 as Wag Overlaps.

EQUIPMENT INFORMATION

CONTROLLER.....2070
CABINET.....332 W/ AUX
SOFTWARE.....ECONOLITE OASIS
CABINET MOUNT.....BASE
OUTPUT FILE POSITIONS...18 WITH AUX. OUTPUT FILE
LOAD SWITCHES USED.....S1,S2,S4,S5,S7,S8, AUX S1,AUX S4
PHASES USED.....1,2,3,4,5,6
OVERLAP "A".....1+2
OVERLAP "B".....NOT USED
OVERLAP "C".....5+6
OVERLAP "D".....NOT USED

SIGNAL HEAD HOOK-UP CHART

LOAD SWITCH NO.	S1	S2	S3	S4		S5		S6	S7		S8	S9	S10	S11	S12	AUX S1	AUX S2	AUX S3	AUX S4	AUX S5	AUX S6
CMU CHANNEL NO.	1	2	13	3		4		14	5		6	15	7	8	16	9	10	17	11	12	18
PHASE	1	2	2 PED	3		4		4 PED	5		6	6 PED	7	8	8 PED	OLA	OLB	SPARE	OLC	OLD	SPARE
SIGNAL HEAD NO.	11★	21,22	NU	31	32	41	42	NU	42	51★	61,62	NU	NU	NU	NU	11★	NU	NU	51★	NU	NU
RED		128		116	116	101	101		✳		134										
YELLOW	✳	129		117	117	102	102				135										
GREEN		130		118	118	103	103				136										
RED ARROW																A121			A114		
YELLOW ARROW									132							A122			A115		
FLASHING YELLOW ARROW																A123			A116		
GREEN ARROW	127			118		103			133	133											

NU = Not Used

✳ Denotes install load resistor. See load resistor installation detail this sheet.

★ See pictorial of head wiring in detail below.

FYA SIGNAL WIRING DETAIL

(wire signal heads as shown)

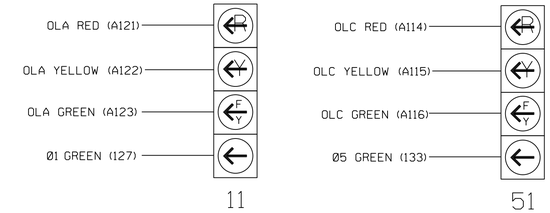

NOTE

The sequence display for signal heads 11 and 51 requires special logic programming. See sheet 2 for programming instructions.

INPUT FILE POSITION LAYOUT

(front view)

		1	2	3	4	5	6	7	8	9	10	11	12	13	14
FILE "I"	U	SLOT EMPTY	SLOT EMPTY	SLOT EMPTY	SLOT EMPTY	SLOT EMPTY	SLOT EMPTY	SLOT EMPTY	SLOT EMPTY	SLOT EMPTY	SLOT EMPTY	SLOT EMPTY	SLOT EMPTY	SLOT EMPTY	FS DC ISOLATOR
	L														ST DC ISOLATOR
FILE "J"	U	SLOT EMPTY	SLOT EMPTY	SLOT EMPTY	SLOT EMPTY	SLOT EMPTY	SLOT EMPTY	SLOT EMPTY	SLOT EMPTY	SLOT EMPTY	SLOT EMPTY	SLOT EMPTY	SLOT EMPTY	SLOT EMPTY	SLOT EMPTY
	L														

EX.: 1A, 2A, ETC. = LOOP NO.'S

FS = FLASH SENSE
ST = STOP TIME

INPUT FILE POSITION LEGEND: J2L
FILE J
SLOT 2
LOWER

SPECIAL DETECTOR NOTE

Install a video detection system for vehicle detection. Perform installation according to manufacturer's directions and NCDOT engineer-approved mounting locations to accomplish the detection schemes shown on the Signal Design Plans.

LOAD RESISTOR INSTALLATION DETAIL

(install resistors as shown below)

ACCEPTABLE VALUES

VALUE (ohms)	WATTAGE
1.5K - 1.9K	25W (min)
2.0K - 3.0K	10W (min)

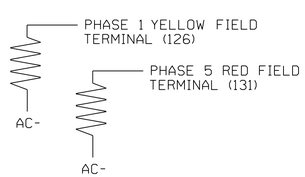

THIS ELECTRICAL DETAIL IS FOR THE SIGNAL DESIGN: 04-1412T2
DESIGNED: January 2018
SEALED: 5/25/2018
REVISED: N/A

Temporary Design 2 (TMP Phase 1)
Electrical Detail - Sheet 1 of 2

DOCUMENT NOT CONSIDERED FINAL UNLESS ALL SIGNATURES COMPLETED

ELECTRICAL AND PROGRAMMING DETAILS FOR:

NC 42
at
SR 1704 (Neuse River Parkway)/ Queen Ann Drive

Division 4 Johnston County Clayton

PLAN DATE: January 2018	REVIEWED BY: J O Deaton		
PREPARED BY: M W Yalch	REVIEWED BY:		
REVISIONS		INIT.	DATE

Prepared for the Offices of:
Traffic Engineering Mobility and Safety Division
Signals Management Section
750 N.Greenfield Pkwy,Garner,NC 27529

Prepared by
URS
URS Corporation – North Carolina
1600 Perimeter Park Drive
Morrisville, North Carolina 27560
TELEPHONE (919) 461-1100 FAX (919) 461-1415
NC LICENSE • C-2243

NORTH CAROLINA PROFESSIONAL SEAL 07438 ENGINEER JAMES O. DEATON

DocuSigned by: James O Deaton 40FF8AC430BD40F... 5/25/2018

SIG. INVENTORY NO. 04-1412T2

5/25/2018
L:\Morrisville\Jobs\R3825B\Traffic\Signals\Electricals\04-1412T2e-00-192.dgn
coxst

DocuSign Envelope ID: EDEA80FB-80A3-45F4-B6C8-CD80310DC6C8

PROJECT REFERENCE NO.	SHEET NO.
R-3825B	Sig. 7.2

LOGICAL I/O PROCESSOR PROGRAMMING DETAIL
TO PRODUCE SPECIAL FYA-PPLT SIGNAL SEQUENCE

(program controller as shown below)

1. FROM MAIN MENU PRESS '2' (PHASE CONTROL), THEN '1' (PHASE CONTROL FUNCTIONS). SCROLL TO THE BOTTOM OF THE MENU AND ENABLE ACT LOGIC COMMANDS 1, 2, 3, 4, 5 AND 6.

2. FROM MAIN MENU PRESS '6' (OUTPUTS), THEN '3' (LOGICAL I/O PROCESSOR).

```
LOGICAL I/O COMMAND #1  (+/-COMMAND#)
IF  ACTIVE PHASE       #1  IS ON
AND RED CLEAR ON PHASE #1  IS ON

              SCROLL DOWN

THEN:
SET OUTPUT  ASSIGNMENT #50 ON
SET OUTPUT  ASSIGNMENT #51 OFF
```

NOTE: LOGIC FOR PHASE 1 RED CLEAR WHEN TRANSITIONING FROM PHASE 1 TO PHASE 2 (HEAD 11).

PRESS '+'

```
LOGICAL I/O COMMAND #2  (+/-COMMAND#)
IF  ACTIVE PHASE       #1  IS ON

              SCROLL DOWN

THEN:
SET OUTPUT  ASSIGNMENT #52 OFF
```

NOTE: LOGIC FOR SWITCHING FLASHING YELLOW ARROW "OFF" DURING PHASE 1 (HEAD 11).

PRESS '+'

```
LOGICAL I/O COMMAND #3  (+/-COMMAND#)
IF  YELLOW ON PHASE    #1  IS ON

              SCROLL DOWN

THEN:
SET OUTPUT  ASSIGNMENT #51 ON
```

NOTE: LOGIC FOR YELLOW ARROW CLEARANCE FROM PHASE 1 (HEAD 11).

PRESS '+'

```
LOGICAL I/O COMMAND #4  (+/-COMMAND#)
IF  ACTIVE PHASE       #5  IS ON
AND RED CLEAR ON PHASE #5  IS ON

              SCROLL DOWN

THEN:
SET OUTPUT  ASSIGNMENT #42 ON
SET OUTPUT  ASSIGNMENT #43 OFF
```

NOTE: LOGIC FOR PHASE 5 RED CLEAR WHEN TRANSITIONING FROM PHASE 5 TO PHASE 6 (HEAD 51).

PRESS '+'

```
LOGICAL I/O COMMAND #5  (+/-COMMAND#)
IF  ACTIVE PHASE       #5  IS ON

              SCROLL DOWN

THEN:
SET OUTPUT  ASSIGNMENT #44 OFF
```

NOTE: LOGIC FOR SWITCHING FLASHING YELLOW ARROW "OFF" DURING PHASE 5 (HEAD 51).

PRESS '+'

```
LOGICAL I/O COMMAND #6  (+/-COMMAND#)
IF  YELLOW ON PHASE    #5  IS ON

              SCROLL DOWN

THEN:
SET OUTPUT  ASSIGNMENT #43 ON
```

NOTE: LOGIC FOR YELLOW ARROW CLEARANCE FROM PHASE 5 (HEAD 51).

LOGIC I/O PROCESSOR PROGRAMMING COMPLETE

OUTPUT REFERENCE SCHEDULE

USE TO INTERPRET LOGIC PROCESSOR

OUTPUT 42 = Overlap C Red
OUTPUT 43 = Overlap C Yellow
OUTPUT 44 = Overlap C Green
OUTPUT 50 = Overlap A Red
OUTPUT 51 = Overlap A Yellow
OUTPUT 52 = Overlap A Green

OVERLAP PROGRAMMING DETAIL

(program controller as shown below)

FROM MAIN MENU PRESS '8' (OVERLAPS), THEN '1' (VEHICLE OVERLAP SETTINGS).

```
PAGE 1: VEHICLE OVERLAP 'A' SETTINGS
 PHASE:          :123456789101112131415 16
VEH OVL PARENTS::XX
VEH OVL NOT VEH::
VEH OVL NOT PED::
VEH OVL GRN EXT::
STARTUP COLOR: _ RED  _ YELLOW  _ GREEN
FLASH COLORS:  _ RED  _ YELLOW  X GREEN
SELECT VEHICLE OVERLAP OPTIONS:   (Y/N)
FLASH YELLOW IN CONTROLLER FLASH?...Y
GREEN EXTENSION (0-255 SEC).........0
YELLOW CLEAR (0=PARENT,3-25.5 SEC)..0.0
RED CLEAR (0=PARENT,0.1-25.5 SEC)...0.0
OUTPUT AS PHASE # (0=NONE, 1-16)....0
```

← NOTICE GREEN FLASH

PRESS '+' TWICE

```
PAGE 1: VEHICLE OVERLAP 'C' SETTINGS
 PHASE:          :123456789101112131415 16
VEH OVL PARENTS::   XX
VEH OVL NOT VEH::
VEH OVL NOT PED::
VEH OVL GRN EXT::
STARTUP COLOR: _ RED  _ YELLOW  _ GREEN
FLASH COLORS:  _ RED  _ YELLOW  X GREEN
SELECT VEHICLE OVERLAP OPTIONS:   (Y/N)
FLASH YELLOW IN CONTROLLER FLASH?...Y
GREEN EXTENSION (0-255 SEC).........0
YELLOW CLEAR (0=PARENT,3-25.5 SEC)..0.0
RED CLEAR (0=PARENT,0.1-25.5 SEC)...0.0
OUTPUT AS PHASE # (0=NONE, 1-16)....0
```

← NOTICE GREEN FLASH

OVERLAP PROGRAMMING COMPLETE

THIS ELECTRICAL DETAIL IS FOR
THE SIGNAL DESIGN: 04-1412T2
DESIGNED: January 2018
SEALED: 5/25/2018
REVISED: N/A

Temporary Design 2 (TMP Phase 1)
Electrical Detail - Sheet 2 of 2

DOCUMENT NOT CONSIDERED FINAL UNLESS ALL SIGNATURES COMPLETED

Prepared by
URS
URS Corporation – North Carolina
1600 Perimeter Park Drive
Morrisville, North Carolina 27560
TELEPHONE (919) 461-1100 FAX (919) 461-1415
NC LICENSE # C-2243

ELECTRICAL AND PROGRAMMING DETAILS FOR:

Prepared for the Offices of:
Traffic Engineering & Signals Management Section, Mobility and Safety Division, Transportation Mobility and Safety Division, STATE OF NORTH CAROLINA, DEPARTMENT OF TRANSPORTATION
750 N.Greenfield Pkwy,Garner,NC 27529

NC 42
at
SR 1704 (Neuse River Parkway)/
Queen Ann Drive

Division 4 | Johnston County | Clayton

PLAN DATE: January 2018	REVIEWED BY: J O Deaton		
PREPARED BY: M W Yalch	REVIEWED BY:		
REVISIONS		INIT.	DATE

NORTH CAROLINA PROFESSIONAL SEAL 07438 ENGINEER JAMES O. DEATON

DocuSigned by: James O Deaton 40FF8AC430BD40F... 5/25/2018

SIG. INVENTORY NO. 04-1412T2

5/25/2018
L:\Morrisville\Jobs\R3825B\Traffic\Signals\Electricals\04-1412t2e-00-192.dgn
cons1

DocuSign Envelope ID: EDEA80FB-80A3-45F4-B6C8-CD80310DC6C8

PROJECT REFERENCE NO.	SHEET NO.
R-3825B	Sig.8.0

PHASING DIAGRAM

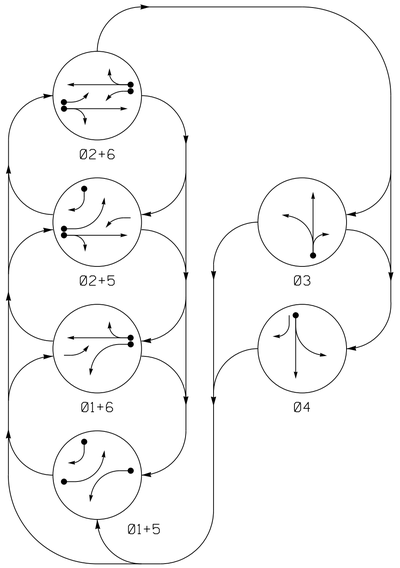

PHASING DIAGRAM DETECTION LEGEND

- DETECTED MOVEMENT
- UNDETECTED MOVEMENT (OVERLAP)
- UNSIGNALIZED MOVEMENT
- PEDESTRIAN MOVEMENT

TABLE OF OPERATION

SIGNAL FACE	PHASE Ø1+5	Ø1+6	Ø2+5	Ø2+6	Ø3	Ø4	FLASH
11	←	←	F Y	F Y	R	R	Y
21, 22	R	R	G	G	R	R	Y
31	R	R	R	R	G ←	R	R
32	R	R	R	R	G	R	R
41	R	R	R	R	R	G ←	R
42	R →	R	R →	R	R	G	R
51	←	F Y	←	F Y	R	R	Y
61, 62	R	G	R	G	R	R	Y

SIGNAL FACE I.D.

All Heads L.E.D.

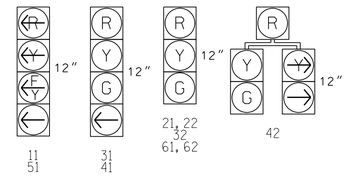

OASIS 2070 LOOP & DETECTOR INSTALLATION CHART

INDUCTIVE LOOPS					DETECTOR PROGRAMMING						
LOOP	SIZE (FT)	DISTANCE FROM STOPBAR (FT)	TURNS	NEW LOOP	PHASE	CALLING	EXTENSION	FULL TIME DELAY	STRETCH TIME	DELAY TIME	SYSTEM LOOP	NEW CARD
1A	6X40	0	✳	Y	1	Y	Y	-	-	15	-	✳
					6	Y	Y	Y	-	3	-	✳
2A	6X6	420	✳	Y	2	Y	Y	-	-	-	-	✳
2B	6X40	0	✳	Y	2	Y	Y	Y	2.0	5	-	✳
3A	6X40	0	✳	Y	3	Y	Y	-	-	10	-	✳
3B	20X6	0	✳	Y	3	Y	Y	-	-	15	-	✳
4A	6X40	0	✳	Y	4	Y	Y	-	-	-	-	✳
5A	6X40	0	✳	Y	5	Y	Y	-	-	15	-	✳
					2	Y	Y	Y	-	3	-	✳
5B	6X40	0	✳	Y	5	Y	Y	-	-	15	-	✳
5C	6X40	+55	✳	Y	5	Y	Y	-	-	15	-	✳
6A	6X6	420	✳	Y	6	Y	Y	-	-	-	-	✳
6B	6C40	0	✳	Y	6	Y	Y	Y	2.0	5	-	✳

✳ Video Detection Zone

6 Phase
Fully Actuated
Isolated

NOTES

1. Refer to "Roadway Standard Drawings NCDOT" dated January 2018, "Standard Specifications for Roads and Structures" dated January 2018.
2. Do not program signal for late night flashing operation unless otherwise directed by the Engineer.
3. Phase 1 and/or phase 5 may be lagged.
4. The order of phase 3 and phase 4 may be reversed.
5. Reposition existing signal heads numbered 11, 21, 22, 51, 61 and 62.
6. Set all detector units to presence mode.

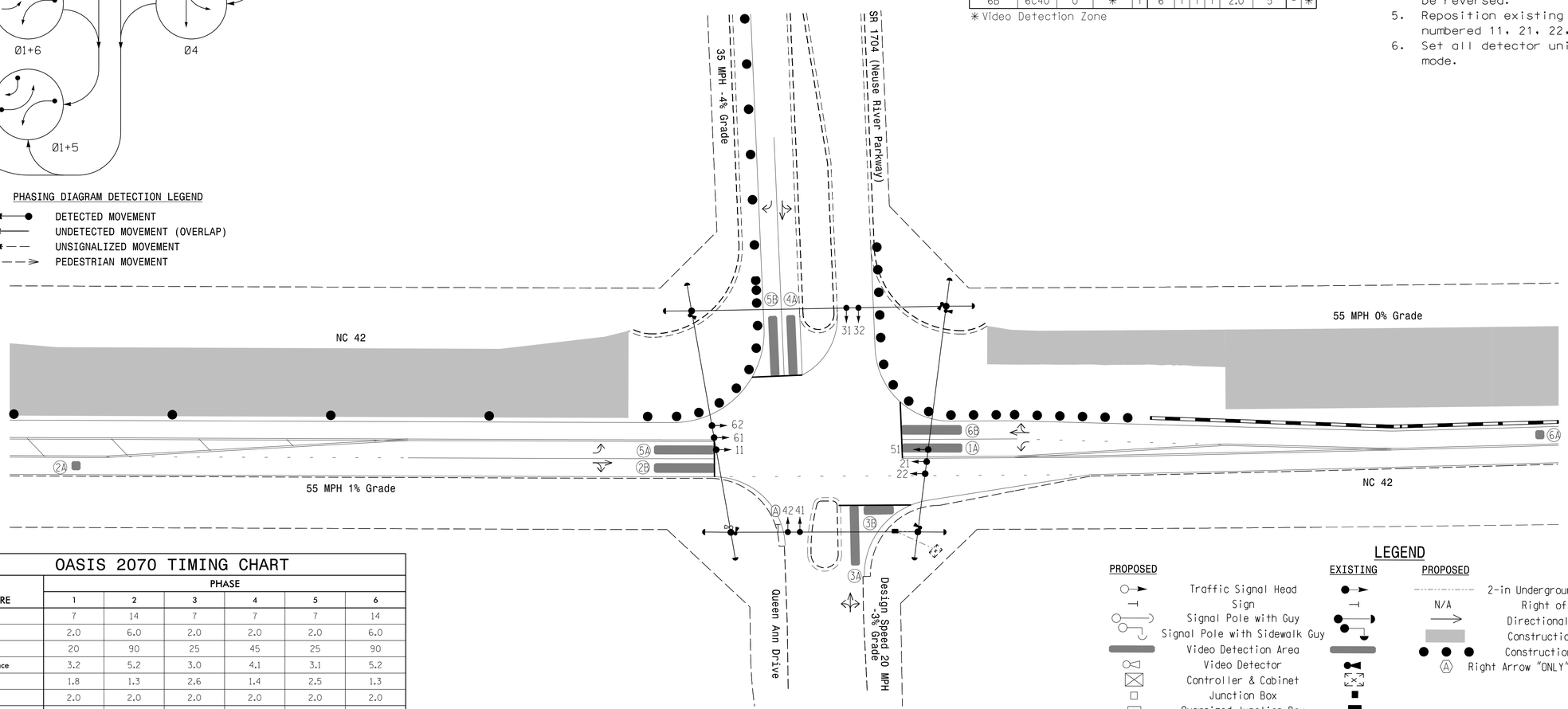

OASIS 2070 TIMING CHART

FEATURE	PHASE 1	2	3	4	5	6
Min Green 1 *	7	14	7	7	7	14
Extension 1	2.0	6.0	2.0	2.0	2.0	6.0
Max Green 1 *	20	90	25	45	25	90
Yellow Clearance	3.2	5.2	3.0	4.1	3.1	5.2
Red Clearance	1.8	1.3	2.6	1.4	2.5	1.3
Red Revert	2.0	2.0	2.0	2.0	2.0	2.0
Walk 1 *	-	-	-	-	-	-
Don't Walk 1	-	-	-	-	-	-
Seconds Per Actuation *	-	-	-	-	-	-
Max Variable Initial *	-	-	-	-	-	-
Time Before Reduction *	-	15	-	-	-	15
Time To Reduce *	-	30	-	-	-	30
Minimum Gap	-	3.4	-	-	-	3.4
Recall Mode	-	MIN RECALL	-	-	-	MIN RECALL
Vehicle Call Memory	-	-	-	-	-	-
Dual Entry	-	-	-	-	-	-
Simultaneous Gap	ON	ON	ON	ON	ON	ON

* These values may be field adjusted. Do not adjust Min Green and Extension times for phases 2 and 6 lower than what is shown. Min Green for all other phases should not be lower than 4 seconds.

LEGEND

PROPOSED		EXISTING	PROPOSED		EXISTING
	Traffic Signal Head			2-in Underground Conduit	
	Sign		N/A	Right of Way	
	Signal Pole with Guy			Directional Arrow	
	Signal Pole with Sidewalk Guy			Construction Zone	
	Video Detection Area			Construction Drums	N/A
	Video Detector		A	Right Arrow "ONLY" Sign (R3-5R)	A
	Controller & Cabinet				
	Junction Box				
	Oversized Junction Box				

Signal Upgrade - Temporary Design 3 (TMP Phase II)

DOCUMENT NOT CONSIDERED FINAL UNLESS ALL SIGNATURES COMPLETED

Prepared by
URS
URS Corporation – North Carolina
1600 Perimeter Park Drive
Morrisville, North Carolina 27560
TELEPHONE (919) 461-1100 FAX (919) 461-1415
NC LICENSE # C-2243

Prepared for the Offices of:
Transportation Mobility and Safety Division
Signal Design Section
750 N.Greenfield Pkwy,Garner,NC 27529

NC 42
at
SR 1704 (Neuse River Parkway)/
Queen Ann Drive

Division 4 Johnston County Clayton

PLAN DATE:	January 2018	REVIEWED BY:	C. L. Kalencik
PREPARED BY:	S. W. Cox	REVIEWED BY:	

SCALE 0 40 1"=40'

REVISIONS	INIT.	DATE

NORTH CAROLINA PROFESSIONAL SEAL 040715 ENGINEER COURTNEY L. KALENCIK

DocuSigned by: Courtney L. Kalencik 5/25/2018
0FE0158CE2864FE...

SIG. INVENTORY NO. 04-14I2T3

5/25/2018
L:\Projects\Willie%20at%20R3825B%Traffic%Signals%04I4I2T3_sig_dsn_date.dgn
cokel

DocuSign Envelope ID: EDEA80FB-80A3-45F4-B6C8-CD80310DC6C8

PROJECT REFERENCE NO.	SHEET NO.
R-3825B	Sig. 8.1

EDI MODEL 2018ECL-NC CONFLICT MONITOR PROGRAMMING DETAIL

(remove jumpers and set switches as shown)

REMOVE DIODE JUMPERS I-5, I-6, I-9, I-11, 2-5, 2-6, 2-9, 2-11, 5-9, 5-11, 6-9, 6-11 AND 9-11.

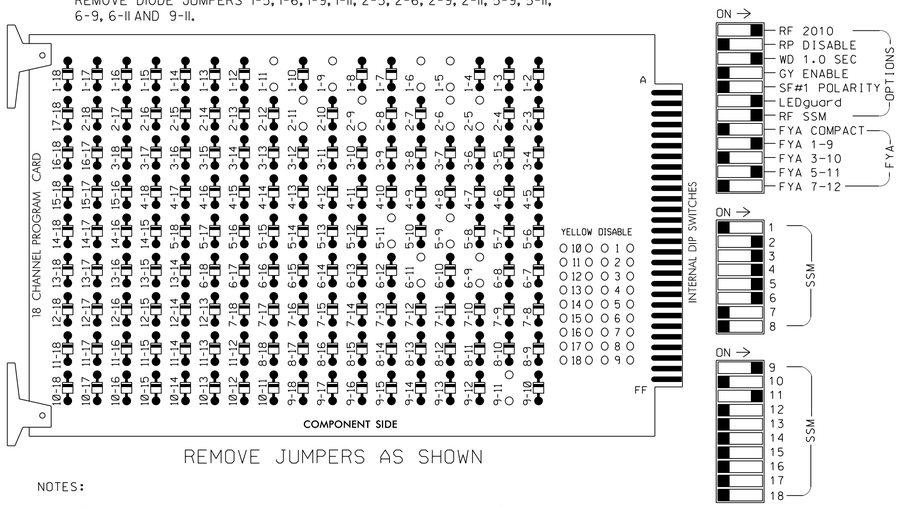

REMOVE JUMPERS AS SHOWN

NOTES:

1. Card is provided with all diode jumpers in place. Removal of any jumper allows its channels to run concurrently.
2. Ensure jumpers SEL2-SEL5 and SEL9 are present on the monitor board.
3. Ensure that Red Enable is active at all times during normal operation.
4. Connect serial cable from conflict monitor to comm. port 1 of 2070 controller. Ensure conflict monitor communicates with 2070.

NOTES

1. To prevent "flash-conflict" problems, insert red flash program blocks for all unused vehicle load switches in the output file. The installer shall verify that signal heads flash in accordance with the Signal Plans.
2. Enable Simultaneous Gap-Out for all phases.
3. Program phases 2 and 6 for Gap Reduction.
4. Program phases 2 and 6 for Start Up In Green.
5. Program phases 2 and 6 for Yellow Flash and overlap 1 as Wag Overlaps.

EQUIPMENT INFORMATION

CONTROLLER.....2070
CABINET.....332 W/ AUX
SOFTWARE.....ECONOLITE OASIS
CABINET MOUNT.....BASE
OUTPUT FILE POSITIONS...18 WITH AUX. OUTPUT FILE
LOAD SWITCHES USED.....S1,S2,S4,S5,S7,S8, AUX S1,AUX S4
PHASES USED.....1,2,3,4,5,6
OVERLAP "A".....1+2
OVERLAP "B".....NOT USED
OVERLAP "C".....5+6
OVERLAP "D".....NOT USED

SIGNAL HEAD HOOK-UP CHART

LOAD SWITCH NO.	S1	S2	S3	S4		S5		S6	S7		S8	S9	S10	S11	S12	AUX S1	AUX S2	AUX S3	AUX S4	AUX S5	AUX S6
CMU CHANNEL NO.	1	2	13	3		4		14	5		6	15	7	8	16	9	10	17	11	12	18
PHASE	1	2	2 PED	3		4		4 PED	5		6	6 PED	7	8	8 PED	OLA	OLB	SPARE	OLC	OLD	SPARE
SIGNAL HEAD NO.	11★	21,22	NU	31	32	41	42	NU	42	51★	61,62	NU	NU	NU	NU	11★	NU	NU	51★	NU	NU
RED		128		116	116	101	101		✳		134										
YELLOW	✳	129		117	117	102	102				135										
GREEN		130		118	118	103	103				136										
RED ARROW																A121			A114		
YELLOW ARROW									132							A122			A115		
FLASHING YELLOW ARROW																A123			A116		
GREEN ARROW	127			118		103			133	133											

NU = Not Used

✳ Denotes install load resistor. See load resistor installation detail this sheet.

★ See pictorial of head wiring in detail below.

FYA SIGNAL WIRING DETAIL

(wire signal heads as shown)

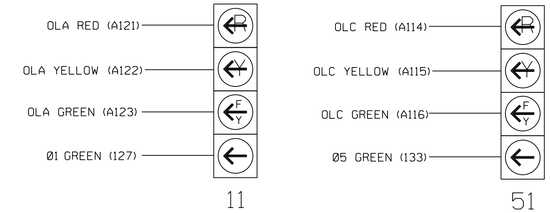

NOTE

The sequence display for signal heads 11 and 51 requires special logic programming. See sheet 2 for programming instructions.

INPUT FILE POSITION LAYOUT

(front view)

		1	2	3	4	5	6	7	8	9	10	11	12	13	14
FILE "I"	U	SLOT EMPTY	SLOT EMPTY	SLOT EMPTY	SLOT EMPTY	SLOT EMPTY	SLOT EMPTY	SLOT EMPTY	SLOT EMPTY	SLOT EMPTY	SLOT EMPTY	SLOT EMPTY	SLOT EMPTY	SLOT EMPTY	FS DC ISOLATOR
	L														ST DC ISOLATOR
FILE "J"	U	SLOT EMPTY	SLOT EMPTY	SLOT EMPTY	SLOT EMPTY	SLOT EMPTY	SLOT EMPTY	SLOT EMPTY	SLOT EMPTY	SLOT EMPTY	SLOT EMPTY	SLOT EMPTY	SLOT EMPTY	SLOT EMPTY	SLOT EMPTY
	L														

EX.: 1A, 2A, ETC. = LOOP NO.'S

FS = FLASH SENSE
ST = STOP TIME

INPUT FILE POSITION LEGEND: J2L
FILE J
SLOT 2
LOWER

SPECIAL DETECTOR NOTE

Install a video detection system for vehicle detection. Perform installation according to manufacturer's directions and NCDOT engineer-approved mounting locations to accomplish the detection schemes shown on the Signal Design Plans.

LOAD RESISTOR INSTALLATION DETAIL

(install resistors as shown below)

ACCEPTABLE VALUES

VALUE (ohms)	WATTAGE
1.5K - 1.9K	25W (min)
2.0K - 3.0K	10W (min)

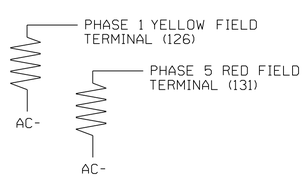

THIS ELECTRICAL DETAIL IS FOR THE SIGNAL DESIGN: 04-1412T3
DESIGNED: January 2018
SEALED: 5/25/2018
REVISED: N/A

Temporary Design 3 (TMP Phase II)
Electrical Detail - Sheet 1 of 2

DOCUMENT NOT CONSIDERED FINAL UNLESS ALL SIGNATURES COMPLETED

Prepared by
URS
URS Corporation – North Carolina
1600 Perimeter Park Drive
Morrisville, North Carolina 27560
TELEPHONE (919) 461-1100 FAX (919) 461-1415
NC LICENSE # C-2243

ELECTRICAL AND PROGRAMMING DETAILS FOR:

Prepared for the Offices of:
Traffic Engineering Mobility and Safety Division
STATE OF NORTH CAROLINA DEPT. OF TRANSPORTATION
Signals Management Section
750 N.Greenfield Pkwy,Garner,NC 27529

NC 42
at
SR 1704 (Neuse River Parkway)/ Queen Ann Drive

Division 4 Johnston County Clayton

PLAN DATE: January 2018	REVIEWED BY: J O Deaton
PREPARED BY: M W Yalch	REVIEWED BY:

REVISIONS	INIT.	DATE

NORTH CAROLINA PROFESSIONAL SEAL 07438 ENGINEER JAMES O. DEATON

DocuSigned by: James O Deaton 49FF8AC430BD40F... 5/25/2018

SIG. INVENTORY NO. 04-1412T3

5/25/2018
L:\Morrisville\Jobs\R3825B\Traffic\Signals\Electricals\04-1412T3e-00-192.dgn
coxst

DocuSign Envelope ID: EDEA80FB-80A3-45F4-B6C8-CD80310DC6C8

PROJECT REFERENCE NO.	SHEET NO.
R-3825B	Sig. 8.2

LOGICAL I/O PROCESSOR PROGRAMMING DETAIL
TO PRODUCE SPECIAL FYA-PPLT SIGNAL SEQUENCE

(program controller as shown below)

1. FROM MAIN MENU PRESS '2' (PHASE CONTROL), THEN '1' (PHASE CONTROL FUNCTIONS). SCROLL TO THE BOTTOM OF THE MENU AND ENABLE ACT LOGIC COMMANDS 1, 2, 3, 4, 5 AND 6.

2. FROM MAIN MENU PRESS '6' (OUTPUTS), THEN '3' (LOGICAL I/O PROCESSOR).

```
LOGICAL I/O COMMAND #1  (+/-COMMAND#)
IF  ACTIVE PHASE       #1  IS ON
AND RED CLEAR ON PHASE #1  IS ON

SCROLL DOWN

THEN:
SET OUTPUT  ASSIGNMENT #50 ON
SET OUTPUT  ASSIGNMENT #51 OFF
```

NOTE: LOGIC FOR PHASE 1 RED CLEAR WHEN TRANSITIONING FROM PHASE 1 TO PHASE 2 (HEAD 11).

PRESS '+'

```
LOGICAL I/O COMMAND #2  (+/-COMMAND#)
IF  ACTIVE PHASE       #1  IS ON

SCROLL DOWN

THEN:
SET OUTPUT  ASSIGNMENT #52 OFF
```

NOTE: LOGIC FOR SWITCHING FLASHING YELLOW ARROW "OFF" DURING PHASE 1 (HEAD 11).

PRESS '+'

```
LOGICAL I/O COMMAND #3  (+/-COMMAND#)
IF  YELLOW ON PHASE    #1  IS ON

SCROLL DOWN

THEN:
SET OUTPUT  ASSIGNMENT #51 ON
```

NOTE: LOGIC FOR YELLOW ARROW CLEARANCE FROM PHASE 1 (HEAD 11).

PRESS '+'

```
LOGICAL I/O COMMAND #4  (+/-COMMAND#)
IF  ACTIVE PHASE       #5  IS ON
AND RED CLEAR ON PHASE #5  IS ON

SCROLL DOWN

THEN:
SET OUTPUT  ASSIGNMENT #42 ON
SET OUTPUT  ASSIGNMENT #43 OFF
```

NOTE: LOGIC FOR PHASE 5 RED CLEAR WHEN TRANSITIONING FROM PHASE 5 TO PHASE 6 (HEAD 51).

PRESS '+'

```
LOGICAL I/O COMMAND #5  (+/-COMMAND#)
IF  ACTIVE PHASE       #5  IS ON

SCROLL DOWN

THEN:
SET OUTPUT  ASSIGNMENT #44 OFF
```

NOTE: LOGIC FOR SWITCHING FLASHING YELLOW ARROW "OFF" DURING PHASE 5 (HEAD 51).

PRESS '+'

```
LOGICAL I/O COMMAND #6  (+/-COMMAND#)
IF  YELLOW ON PHASE    #5  IS ON

SCROLL DOWN

THEN:
SET OUTPUT  ASSIGNMENT #43 ON
```

NOTE: LOGIC FOR YELLOW ARROW CLEARANCE FROM PHASE 5 (HEAD 51).

LOGIC I/O PROCESSOR PROGRAMMING COMPLETE

OUTPUT REFERENCE SCHEDULE

USE TO INTERPRET LOGIC PROCESSOR

OUTPUT 42 = Overlap C Red
OUTPUT 43 = Overlap C Yellow
OUTPUT 44 = Overlap C Green
OUTPUT 50 = Overlap A Red
OUTPUT 51 = Overlap A Yellow
OUTPUT 52 = Overlap A Green

OVERLAP PROGRAMMING DETAIL

(program controller as shown below)

FROM MAIN MENU PRESS '8' (OVERLAPS), THEN '1' (VEHICLE OVERLAP SETTINGS).

```
PAGE 1: VEHICLE OVERLAP 'A' SETTINGS
PHASE:          :123456789101112131415 16
VEH OVL PARENTS::XX
VEH OVL NOT VEH::
VEH OVL NOT PED::
VEH OVL GRN EXT::
STARTUP COLOR: _ RED  _ YELLOW  _ GREEN
FLASH COLORS:  _ RED  _ YELLOW  X GREEN
SELECT VEHICLE OVERLAP OPTIONS:  (Y/N)
FLASH YELLOW IN CONTROLLER FLASH?...Y
GREEN EXTENSION (0-255 SEC).........0
YELLOW CLEAR (0=PARENT,3-25.5 SEC)..0.0
RED CLEAR (0=PARENT,0.1-25.5 SEC)...0.0
OUTPUT AS PHASE # (0=NONE, 1-16)....0
```

← NOTICE GREEN FLASH

PRESS '+' TWICE

```
PAGE 1: VEHICLE OVERLAP 'C' SETTINGS
PHASE:          :123456789101112131415 16
VEH OVL PARENTS::   XX
VEH OVL NOT VEH::
VEH OVL NOT PED::
VEH OVL GRN EXT::
STARTUP COLOR: _ RED  _ YELLOW  _ GREEN
FLASH COLORS:  _ RED  _ YELLOW  X GREEN
SELECT VEHICLE OVERLAP OPTIONS:  (Y/N)
FLASH YELLOW IN CONTROLLER FLASH?...Y
GREEN EXTENSION (0-255 SEC).........0
YELLOW CLEAR (0=PARENT,3-25.5 SEC)..0.0
RED CLEAR (0=PARENT,0.1-25.5 SEC)...0.0
OUTPUT AS PHASE # (0=NONE, 1-16)....0
```

← NOTICE GREEN FLASH

OVERLAP PROGRAMMING COMPLETE

THIS ELECTRICAL DETAIL IS FOR
THE SIGNAL DESIGN: 04-1412T3
DESIGNED: January 2018
SEALED: 5/25/2018
REVISED: N/A

Temporary Design 3 (TMP Phase II)
Electrical Detail - Sheet 2 of 2

DOCUMENT NOT CONSIDERED FINAL UNLESS ALL SIGNATURES COMPLETED

Prepared by
URS
URS Corporation – North Carolina
1600 Perimeter Park Drive
Morrisville, North Carolina 27560
TELEPHONE (919) 461-1100 FAX (919) 461-1415
NC LICENSE # C-2243

ELECTRICAL AND PROGRAMMING DETAILS FOR:

NC 42
at
SR 1704 (Neuse River Parkway)/
Queen Ann Drive

Division 4 Johnston County Clayton

Prepared for the Offices of:
Transportation Mobility and Safety Division
ITS & Signals Management Section
STATE OF NORTH CAROLINA
DEPARTMENT OF TRANSPORTATION
750 N.Greenfield Pkwy,Garner,NC 27529

PLAN DATE: January 2018	REVIEWED BY: J O Deaton		
PREPARED BY: M W Yalch	REVIEWED BY:		
REVISIONS		INIT.	DATE

NORTH CAROLINA PROFESSIONAL SEAL 07438 ENGINEER JAMES O. DEATON

DocuSigned by: James O Deaton 40FF8AC430BD40F... 5/25/2018

SIG. INVENTORY NO. 04-1412T3

5/25/2018
L:\Morrisville\Jobs\R3825B\Traffic\Signals\Electricals\04-1412T3a-00-192.dgn
cons1

DocuSign Envelope ID: EDEA80FB-80A3-45F4-B6C8-CD80310DC6C8

PROJECT REFERENCE NO.	SHEET NO.
R-3825B	Sig.9.0

PHASING DIAGRAM

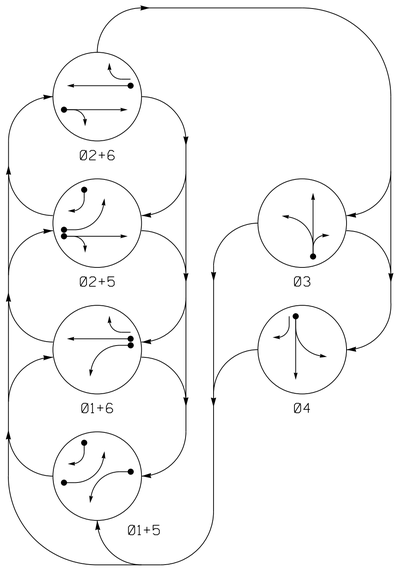

PHASING DIAGRAM DETECTION LEGEND

- DETECTED MOVEMENT
- UNDETECTED MOVEMENT (OVERLAP)
- UNSIGNALIZED MOVEMENT
- PEDESTRIAN MOVEMENT

TABLE OF OPERATION

SIGNAL FACE	PHASE Ø1+5	Ø1+6	Ø2+5	Ø2+6	Ø3	Ø4	FLASH
11	←	←	~~R~~	~~R~~	~~R~~	~~R~~	~~R~~
21, 22	R	R	G	G	R	R	Y
31	R	R	R	R	G ←	R	R
32	R	R	R	R	G	R	R
41	R	R	R	R	R	G ←	R
42	R/→	R	R/→	R	R	G	R
51	←	~~R~~	←	~~R~~	~~R~~	~~R~~	~~R~~
61, 62	R	G	R	G	R	R	Y

SIGNAL FACE I.D.

All Heads L.E.D.

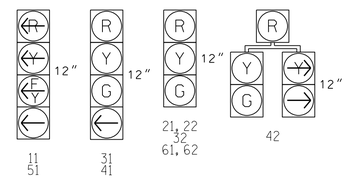

OASIS 2070 LOOP & DETECTOR INSTALLATION CHART

INDUCTIVE LOOPS					DETECTOR PROGRAMMING						
LOOP	SIZE (FT)	DISTANCE FROM STOPBAR (FT)	TURNS	NEW LOOP	PHASE	CALLING	EXTENSION	FULL TIME DELAY	STRETCH TIME	DELAY TIME	SYSTEM LOOP	NEW CARD
1A	6X40	0	*	Y	1	Y	Y	-	-	15	-	*
2A	6X6	420	*	-	2	Y	Y	-	-	-	-	*
2B	6X40	0	*	-	2	Y	Y	Y	2.0	5	-	*
3A	6X40	0	*	-	3	Y	Y	-	-	10	-	*
3B	20X6	0	*	-	3	Y	Y	-	-	15	-	*
4A	6X40	0	*	Y	4	Y	Y	-	-	-	-	*
5A	6X40	0	*	-	5	Y	Y	-	-	15	-	*
5B	6X40	0	*	Y	5	Y	Y	-	-	15	-	*
6A	6X6	420	*	Y	6	Y	Y	-	-	-	-	*
6B	6X40	0	*	Y	6	Y	Y	Y	2.0	5	-	*

* Video Detection Zone

6 Phase
Fully Actuated
Isolated

NOTES

1. Refer to "Roadway Standard Drawings NCDOT" dated January 2018, "Standard Specifications for Roads and Structures" dated January 2018.
2. Do not program signal for late night flashing operation unless otherwise directed by the Engineer.
3. Phase 1 and/or phase 5 may be lagged.
4. The order of phase 3 and phase 4 may be reversed.
5. Reposition existing signal heads numbered 11, 61 and 62.
6. Set all detector units to presence mode.

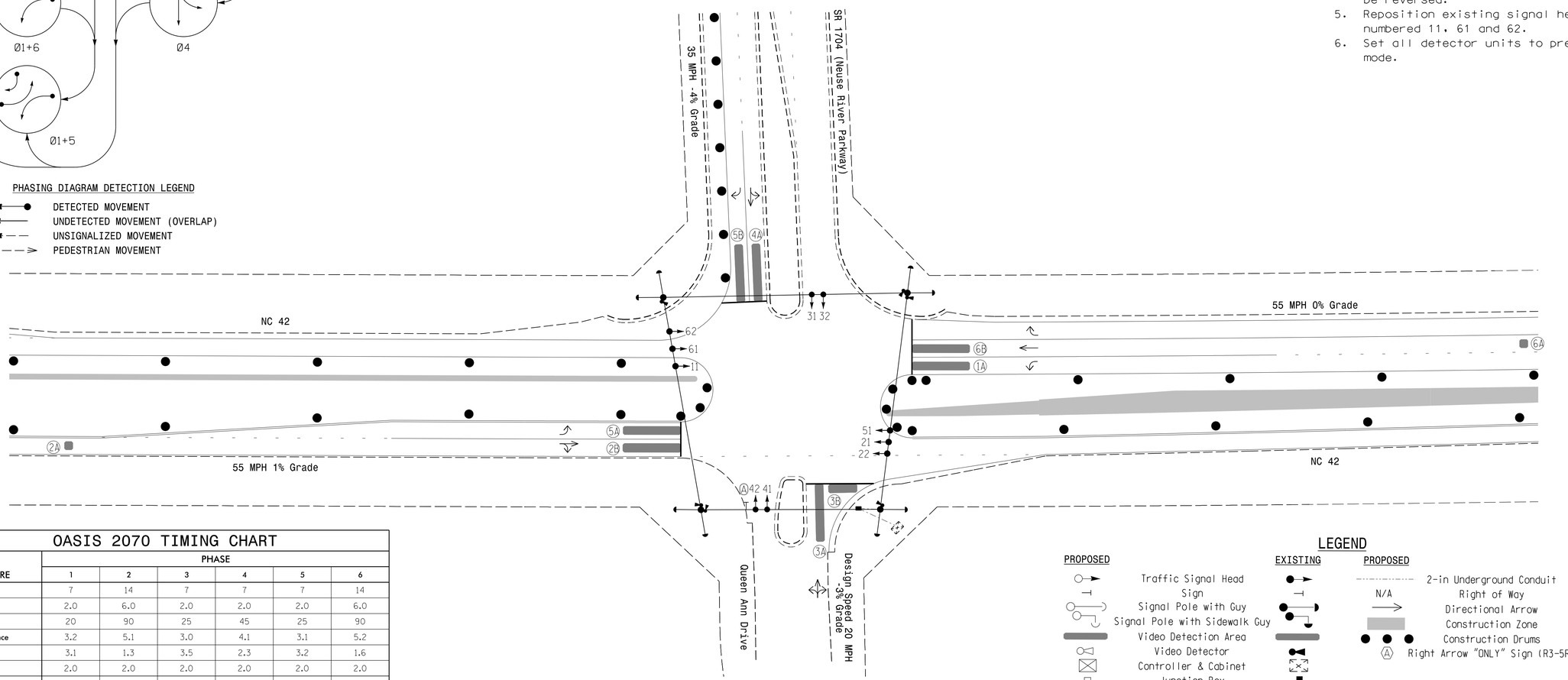

OASIS 2070 TIMING CHART

FEATURE	PHASE 1	2	3	4	5	6
Min Green 1 *	7	14	7	7	7	14
Extension 1	2.0	6.0	2.0	2.0	2.0	6.0
Max Green 1 *	20	90	25	45	25	90
Yellow Clearance	3.2	5.1	3.0	4.1	3.1	5.2
Red Clearance	3.1	1.3	3.5	2.3	3.2	1.6
Red Revert	2.0	2.0	2.0	2.0	2.0	2.0
Walk 1 *	-	-	-	-	-	-
Don't Walk 1	-	-	-	-	-	-
Seconds Per Actuation *	-	-	-	-	-	-
Max Variable Initial *	-	-	-	-	-	-
Time Before Reduction *	-	15	-	-	-	15
Time To Reduce *	-	30	-	-	-	30
Minimum Gap	-	3.4	-	-	-	3.4
Recall Mode	-	MIN RECALL	-	-	-	MIN RECALL
Vehicle Call Memory	-	-	-	-	-	-
Dual Entry	-	-	-	-	-	-
Simultaneous Gap	ON	ON	ON	ON	ON	ON

* These values may be field adjusted. Do not adjust Min Green and Extension times for phases 2 and 6 lower than what is shown. Min Green for all other phases should not be lower than 4 seconds.

LEGEND

PROPOSED		EXISTING	PROPOSED		EXISTING
	Traffic Signal Head			2-in Underground Conduit	
	Sign		N/A	Right of Way	
	Signal Pole with Guy			Directional Arrow	
	Signal Pole with Sidewalk Guy			Construction Zone	
	Video Detection Area			Construction Drums	N/A
	Video Detector		A	Right Arrow "ONLY" Sign (R3-5R)	A
	Controller & Cabinet				
	Junction Box				
	Oversized Junction Box				

Signal Upgrade - Temporary Design 4 (TMP Phase III)

DOCUMENT NOT CONSIDERED FINAL UNLESS ALL SIGNATURES COMPLETED

Prepared by
URS
URS Corporation – North Carolina
1600 Perimeter Park Drive
Morrisville, North Carolina 27560
TELEPHONE (919) 461-1100 FAX (919) 461-1415
NC LICENSE • C-2243

Prepared for the Offices of:
Transportation Mobility and Safety Division
STATE OF NORTH CAROLINA DEPARTMENT OF TRANSPORTATION
Signal Design Section
750 N.Greenfield Pkwy,Garner,NC 27529

NC 42
at
SR 1704 (Neuse River Parkway)/
Queen Ann Drive

Division 4 Johnston County Clayton

PLAN DATE: January 2018 REVIEWED BY: C. L. Kalencik
PREPARED BY: S. W. Cox REVIEWED BY:

SCALE 0 40 1"=40'

REVISIONS	INIT.	DATE

NORTH CAROLINA PROFESSIONAL SEAL 040715 ENGINEER COURTNEY L. KALENCIK

DocuSigned by: Courtney L. Kalencik 5/25/2018
0FE9158CE2964FE...

SIG. INVENTORY NO. 04-1412T4

5/25/2018
L:\Projects\Sig\R3825B\Traffic\Signals\04141274_sig_dsn_date.dgn
COXSI

DocuSign Envelope ID: EDEA80FB-80A3-45F4-B6C8-CD80310DC6C8

PROJECT REFERENCE NO.	SHEET NO.
R-3825B	Sig. 9.1

EDI MODEL 2018ECL-NC CONFLICT MONITOR PROGRAMMING DETAIL

(remove jumpers and set switches as shown)

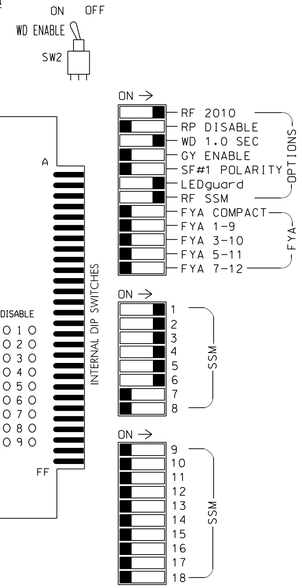

■ = DENOTES POSITION OF SWITCH

NOTES:

1. Card is provided with all diode jumpers in place. Removal of any jumper allows its channels to run concurrently.
2. Ensure jumpers SEL2-SEL5 and SEL9 are present on the monitor board.
3. Ensure that Red Enable is active at all times during normal operation.
4. Connect serial cable from conflict monitor to comm. port 1 of 2070 controller. Ensure conflict monitor communicates with 2070.

NOTES

1. To prevent "flash-conflict" problems, insert red flash program blocks for all unused vehicle load switches in the output file. The installer shall verify that signal heads flash in accordance with the Signal Plans.
2. Return controller to factory defaults before programming per this electrical detail.
3. Enable Simultaneous Gap-Out for all phases.
4. Program phases 2 and 6 for Gap Reduction.
5. Program phases 2 and 6 for Start Up In Green.
6. Program phases 2 and 6 for Yellow Flash.

EQUIPMENT INFORMATION

CONTROLLER.....2070
CABINET.....332 W/ AUX
SOFTWARE.....ECONOLITE OASIS
CABINET MOUNT.....BASE
OUTPUT FILE POSITIONS...18 WITH AUX. OUTPUT FILE
LOAD SWITCHES USED.....S1,S2,S4,S5,S7,S8
PHASES USED.....1,2,3,4,5,6
OVERLAP "A".....NOT USED
OVERLAP "B".....NOT USED
OVERLAP "C".....NOT USED
OVERLAP "D".....NOT USED

SIGNAL HEAD HOOK-UP CHART

LOAD SWITCH NO.	S1	S2	S3	S4		S5		S6	S7		S8	S9	S10	S11	S12	AUX S1	AUX S2	AUX S3	AUX S4	AUX S5	AUX S6
CMU CHANNEL NO.	1	2	13	3		4		14	5		6	15	7	8	16	9	10	17	11	12	18
PHASE	1	2	2 PED	3		4		4 PED	5		6	6 PED	7	8	8 PED	OLA	OLB	SPARE	OLC	OLD	SPARE
SIGNAL HEAD NO.	11★	21,22	NU	31	32	41	42	NU	42	51★	61,62	NU	NU	NU	NU	NU	NU	NU	NU	NU	NU
RED		128		116	116	101	101				134										
YELLOW		129		117	117	102	102				135										
GREEN		130		118	118	103	103				136										
RED ARROW	125									131											
YELLOW ARROW	126								132	132											
FLASHING YELLOW ARROW																					
GREEN ARROW	127			118		103			133	133											

NU = Not Used

★ See pictorial of head wiring in detail below.

FYA SIGNAL WIRING DETAIL

(wire signal heads as shown)

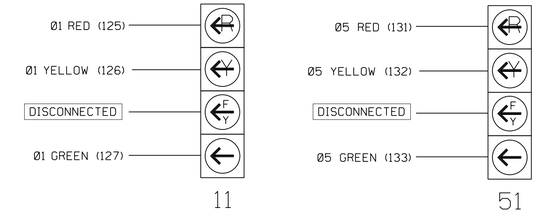

INPUT FILE POSITION LAYOUT

(front view)

		1	2	3	4	5	6	7	8	9	10	11	12	13	14
FILE "I"	U	SLOT EMPTY	SLOT EMPTY	SLOT EMPTY	SLOT EMPTY	SLOT EMPTY	SLOT EMPTY	SLOT EMPTY	SLOT EMPTY	SLOT EMPTY	SLOT EMPTY	SLOT EMPTY	SLOT EMPTY	SLOT EMPTY	FS DC ISOLATOR
	L														ST DC ISOLATOR
FILE "J"	U	SLOT EMPTY	SLOT EMPTY	SLOT EMPTY	SLOT EMPTY	SLOT EMPTY	SLOT EMPTY	SLOT EMPTY	SLOT EMPTY	SLOT EMPTY	SLOT EMPTY	SLOT EMPTY	SLOT EMPTY	SLOT EMPTY	SLOT EMPTY
	L														

EX.: 1A, 2A, ETC. = LOOP NO.'S

FS = FLASH SENSE
ST = STOP TIME

INPUT FILE POSITION LEGEND: J2L
FILE J
SLOT 2
LOWER

SPECIAL DETECTOR NOTE

Install a video detection system for vehicle detection. Perform installation according to manufacturer's directions and NCDOT engineer-approved mounting locations to accomplish the detection schemes shown on the Signal Design Plans.

LOAD RESISTOR INSTALLATION DETAIL

ACCEPTABLE VALUES

VALUE (ohms)	WATTAGE
1.5K - 1.9K	25W (min)
2.0K - 3.0K	10W (min)

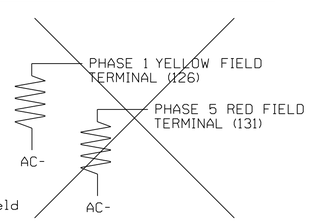

IMPORTANT! Remove resistors from field terminals as shown above, if present.

THIS ELECTRICAL DETAIL IS FOR
THE SIGNAL DESIGN: 04-1412T4
DESIGNED: January 2018
SEALED: 5/25/2018
REVISED: N/A

Temporary Design 4 (TMP Phase III)
Electrical Detail

DOCUMENT NOT CONSIDERED FINAL UNLESS ALL SIGNATURES COMPLETED

ELECTRICAL AND PROGRAMMING DETAILS FOR:

NC 42
at
SR 1704 (Neuse River Parkway)/
Queen Ann Drive

Division 4 Johnston County Clayton

PLAN DATE: January 2018	REVIEWED BY: J O Deaton		
PREPARED BY: M W Yalch	REVIEWED BY:		
REVISIONS		INIT.	DATE

Prepared for the Offices of:
Traffic Engineering Mobility and Safety Division
STATE OF NORTH CAROLINA DEPARTMENT OF TRANSPORTATION
Signals Management Section
750 N.Greenfield Pkwy,Garner,NC 27529

Prepared by
URS
URS Corporation – North Carolina
1600 Perimeter Park Drive
Morrisville, North Carolina 27560
TELEPHONE (919) 461-1100 FAX (919) 461-1415
NC LICENSE • C-2243

NORTH CAROLINA PROFESSIONAL SEAL 07438 ENGINEER JAMES O. DEATON

DocuSigned by: James O Deaton 40FF8AC430BD40F... 5/25/2018

SIG. INVENTORY NO. 04-1412T4

5/25/2018
L:\Morrisville\Jobs\R3825B\Traffic\Signals\Electricals\04-1412T4e-00-192.dgn
cdxs1

DocuSign Envelope ID: EDEA80FB-80A3-45F4-B6C8-CD80310DC6C8

PROJECT REFERENCE NO.	SHEET NO.
R-3825B	Sig.10.0

PHASING DIAGRAM

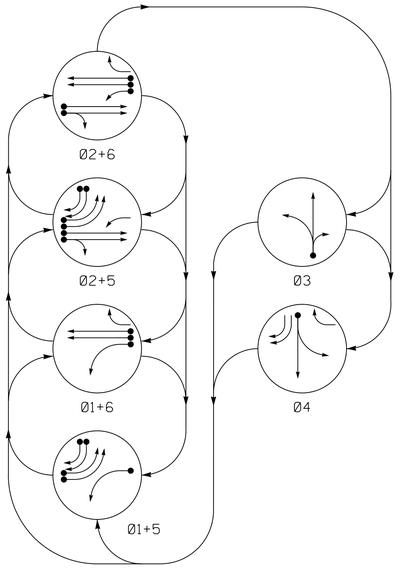

PHASING DIAGRAM DETECTION LEGEND

- DETECTED MOVEMENT
- UNDETECTED MOVEMENT (OVERLAP)
- UNSIGNALIZED MOVEMENT
- PEDESTRIAN MOVEMENT

TABLE OF OPERATION

SIGNAL FACE	PHASE 01+5	01+6	02+5	02+6	03	04	FLASH
11	←	←	F Y	F Y	R	R	Y
21, 22	R	R	G	G	R	R	Y
31	R	R	R	R	G ←	R	R
32	R	R	R	R	G	R	R
41	R	R	R	R	R	G ←	R
42	R	R	R	R	R	G	R
43, 44	→	R	→	R	R	→	R
51, 52	←	R	←	R	R	R	R
61	R	G	R	G	R	R	Y
62	R	G	R	G	R	R/→	Y

SIGNAL FACE I.D.

All Heads L.E.D.

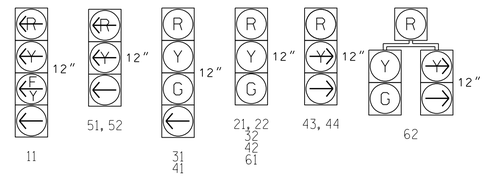

OASIS 2070 LOOP & DETECTOR INSTALLATION CHART

INDUCTIVE LOOPS					DETECTOR PROGRAMMING							
LOOP	SIZE (FT)	DISTANCE FROM STOPBAR (FT)	TURNS	NEW LOOP	PHASE	CALLING	EXTENSION	FULL TIME DELAY	STRETCH TIME	DELAY TIME	SYSTEM LOOP	NEW CARD
1A	6X40	0	2-4-2	Y	1	Y	Y	-	-	15	-	Y
					6	Y	Y	Y	-	3	-	Y
2A	6X6	420	6	Y	2	Y	Y	-	-	-	-	Y
2B	6X6	420	6	Y	2	Y	Y	-	-	-	-	Y
3A	6X40	0	2-4-2	Y	3	Y	Y	-	-	10	-	Y
3B	20X6	0	3	Y	3	Y	Y	-	-	15	-	Y
4A	6X40	0	2-4-2	Y	4	Y	Y	-	-	-	-	Y
5A	6X40	0	2-4-2	Y	5	Y	Y	-	-	-	-	Y
5B	6X40	0	2-4-2	Y	5	Y	Y	-	-	-	-	Y
5C	6X40	0	2-4-2	Y	5	Y	Y	-	-	15	-	Y
5D	6X40	0	2-4-2	Y	5	Y	Y	-	-	15	-	Y
6A	6X6	420	6	Y	6	Y	Y	-	-	-	-	Y
6B	6X6	420	6	Y	6	Y	Y	-	-	-	-	Y
S5	6X6	+200	3	Y	-	-	-	-	-	-	Y	Y
S6	6X6	+200	3	Y	-	-	-	-	-	-	Y	Y
S7	6X6	+200	4	Y	-	-	-	-	-	-	Y	Y
S8	6X6	+200	4	Y	-	-	-	-	-	-	Y	Y

6 Phase Fully Actuated NC 42 CLS

NOTES

1. Refer to "Roadway Standard Drawings NCDOT" dated January 2018, "Standard Specifications for Roads and Structures" dated January 2018.
2. Do not program signal for late night flashing operation unless otherwise directed by the Engineer.
3. Phase 1 and/or phase 5 may be lagged.
4. The order of phase 3 and phase 4 may be reversed.
5. Set all detector units to presence mode.
6. Maximum times shown in timing chart are for free-run operation only. Coordinated signal system timing values supersede these values.
7. Closed loop system data: Controller Asset #1412.
8. All metal poles and arms should be black in color as specified in the project special provisions.

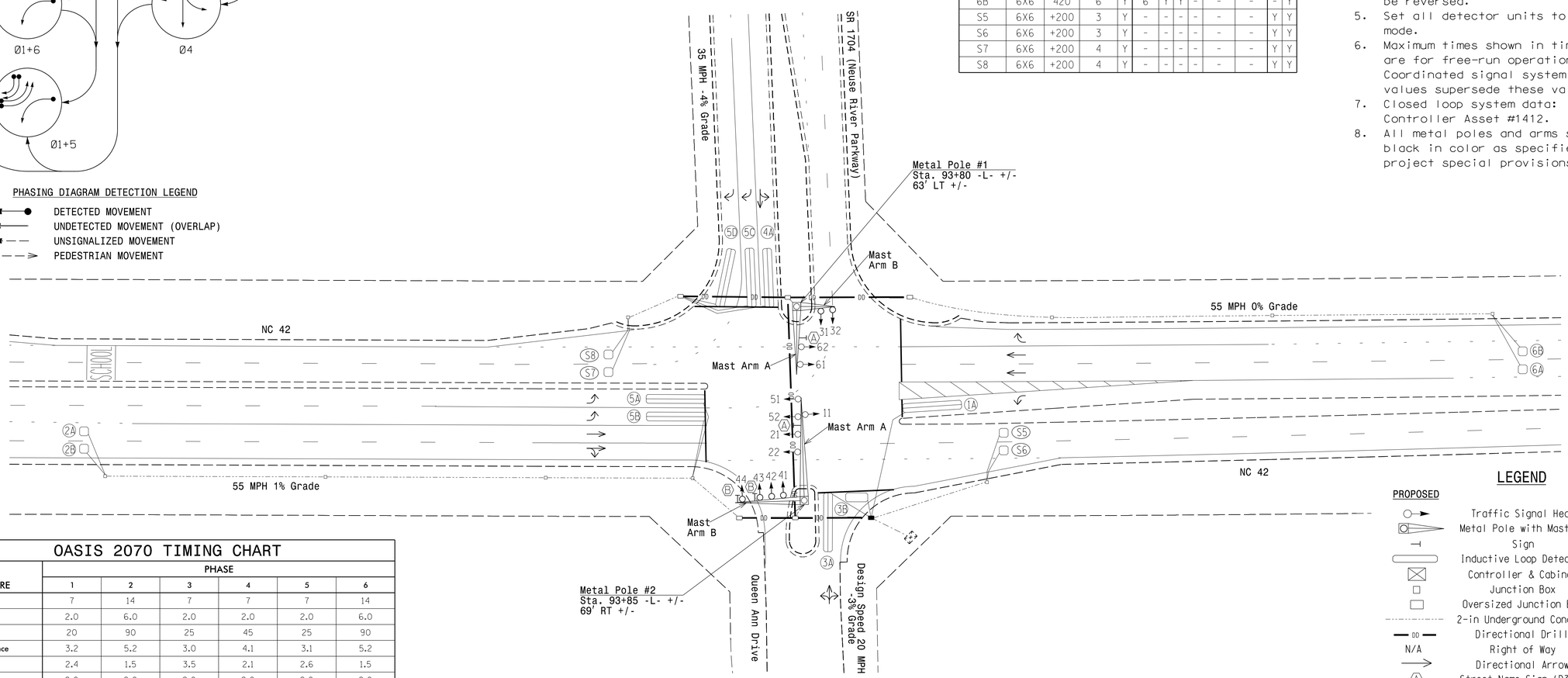

LEGEND

PROPOSED		EXISTING
○→	Traffic Signal Head	●→
	Metal Pole with Mastarm	
⊣	Sign	⊣
	Inductive Loop Detector	
⊠	Controller & Cabinet	
□	Junction Box	■
	Oversized Junction Box	■
	2-in Underground Conduit	
DD	Directional Drill	N/A
N/A	Right of Way	
→	Directional Arrow	→
Ⓐ	Street Name Sign (D3-1)	Ⓐ
Ⓑ	Right Arrow "ONLY" Sign (R3-5R)	Ⓑ

OASIS 2070 TIMING CHART

FEATURE	PHASE 1	2	3	4	5	6
Min Green 1 *	7	14	7	7	7	14
Extension 1	2.0	6.0	2.0	2.0	2.0	6.0
Max Green 1 *	20	90	25	45	25	90
Yellow Clearance	3.2	5.2	3.0	4.1	3.1	5.2
Red Clearance	2.4	1.5	3.5	2.1	2.6	1.5
Red Revert	2.0	2.0	2.0	2.0	2.0	2.0
Walk 1 *	-	-	-	-	-	-
Don't Walk 1	-	-	-	-	-	-
Seconds Per Actuation *	-	1.8	-	-	-	1.8
Max Variable Initial *	-	46	-	-	-	46
Time Before Reduction *	-	15	-	-	-	15
Time To Reduce *	-	30	-	-	-	30
Minimum Gap	-	3.4	-	-	-	3.4
Recall Mode	-	MIN RECALL	-	-	-	MIN RECALL
Vehicle Call Memory	-	YELLOW	-	-	-	YELLOW
Dual Entry	-	-	-	-	-	-
Simultaneous Gap	ON	ON	ON	ON	ON	ON

* These values may be field adjusted. Do not adjust Min Green and Extension times for phases 2 and 6 lower than what is shown. Min Green for all other phases should not be lower than 4 seconds.

Signal Upgrade - Final Design

DOCUMENT NOT CONSIDERED FINAL UNLESS ALL SIGNATURES COMPLETED

Prepared by
URS
URS Corporation – North Carolina
1600 Perimeter Park Drive
Morrisville, North Carolina 27560
TELEPHONE (919) 461-1100 FAX (919) 461-1415
NC LICENSE • C-2243

Prepared for the Offices of:
Transportation Mobility and Safety Division
STATE OF NORTH CAROLINA DEPARTMENT OF TRANSPORTATION
Signal Design Section
750 N.Greenfield Pkwy,Garner,NC 27529

NC 42
at
SR 1704 (Neuse River Parkway)/
Queen Ann Drive

Division 4 Johnston County Clayton

PLAN DATE:	January 2018	REVIEWED BY:	C. L. Kalencik
PREPARED BY:	S. W. Cox	REVIEWED BY:	

SCALE 0 40 1"=40'

REVISIONS	INIT.	DATE

NORTH CAROLINA PROFESSIONAL SEAL 040715 ENGINEER CORTNEY L. KALENCIK

DocuSigned by: Courtney L. Kalencik 5/25/2018
0FE9158CE2864FE...

SIG. INVENTORY NO. 04-1412

5/25/2018
L:\Work\Traffic\Signals\04-1412_sig_dsn_date.dgn
COXSI

DocuSign Envelope ID: EDEA80FB-80A3-45F4-B6C8-CD80310DC6C8

PROJECT REFERENCE NO.	SHEET NO.
R-3825B	Sig. 10.1

EDI MODEL 2018ECL-NC CONFLICT MONITOR PROGRAMMING DETAIL

(remove jumpers and set switches as shown)

REMOVE DIODE JUMPERS 1-5, 1-6, 1-9, 1-12, 2-5, 2-6, 2-9, 2-12, 4-12, 5-9, 5-12, 6-9 AND 9-12.

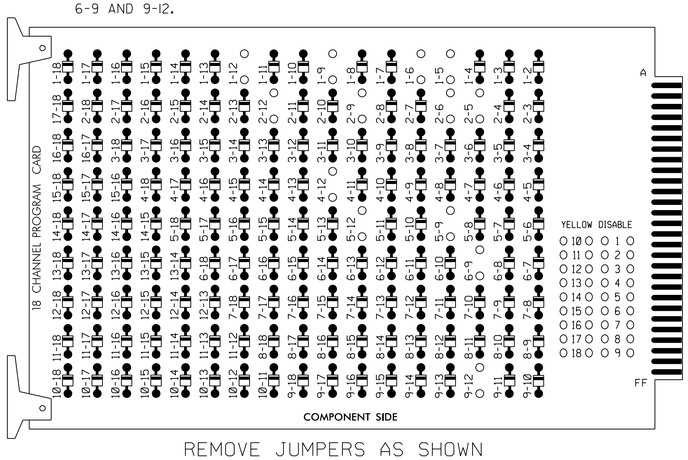

REMOVE JUMPERS AS SHOWN

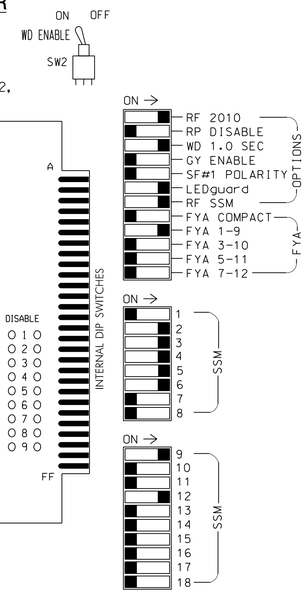

■ = DENOTES POSITION OF SWITCH

NOTES:

1. Card is provided with all diode jumpers in place. Removal of any jumper allows its channels to run concurrently.
2. Ensure jumpers SEL2-SEL5 and SEL9 are present on the monitor board.
3. Ensure that Red Enable is active at all times during normal operation.
4. Connect serial cable from conflict monitor to comm. port 1 of 2070 controller. Ensure conflict monitor communicates with 2070.

NOTES

1. To prevent "flash-conflict" problems, insert red flash program blocks for all unused vehicle load switches in the output file. The installer shall verify that signal heads flash in accordance with the Signal Plans.
2. Enable Simultaneous Gap-Out for all phases.
3. Program phases 2 and 6 for Variable Initial and Gap Reduction.
4. Program phases 2 and 6 for Start Up In Green.
5. Program phases 2 and 6 for Yellow Flash and overlap 1 as Wag Overlaps.
6. The cabinet and controller are part of the NC 42 Closed Loop System.

EQUIPMENT INFORMATION

CONTROLLER.....2070
CABINET.....332 W/ AUX
SOFTWARE.....ECONOLITE OASIS
CABINET MOUNT.....BASE
OUTPUT FILE POSITIONS...18 WITH AUX. OUTPUT FILE
LOAD SWITCHES USED.....S1,S2,S4,S5,S7,S8, AUX S1,AUX S5
PHASES USED.....1,2,3,4,5,6
OVERLAP "A".....1+2
OVERLAP "B".....NOT USED
OVERLAP "C".....NOT USED
OVERLAP "D".....4+5

SIGNAL HEAD HOOK-UP CHART

LOAD SWITCH NO.	S1	S2	S3	S4		S5			S6	S7	S8	S9	S10	S11	S12	AUX S1	AUX S2	AUX S3	AUX S4	AUX S5	AUX S6
CMU CHANNEL NO.	1	2	13	3		4			14	5	6	15	7	8	16	9	10	17	11	12	18
PHASE	1	2	2 PED	3		4			4 PED	5	6	6 PED	7	8	8 PED	OLA	OLB	SPARE	OLC	OLD	SPARE
SIGNAL HEAD NO.	11★	21,22	NU	31	32	41	42	62	NU	51,52	61,62	NU	NU	NU	NU	11★	NU	NU	NU	43,44	NU
RED		128		116	116	101	101				134									A101	
YELLOW	✳	129		117	117	102	102				135										
GREEN		130		118	118	103	103				136										
RED ARROW										131						A121					
YELLOW ARROW								102		132						A122				A102	
FLASHING YELLOW ARROW																A123					
GREEN ARROW	127			118		103		103		133										A103	

NU = Not Used

✳ Denotes install load resistor. See load resistor installation detail this sheet.

★ See pictorial of head wiring in detail below.

FYA SIGNAL WIRING DETAIL

(wire signal head as shown)

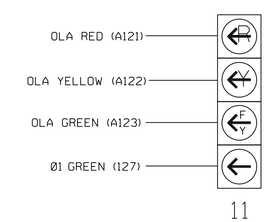

NOTE

The sequence display for signal head 11 requires special logic programming. See sheet 2 for programming instructions.

INPUT FILE POSITION LAYOUT

(front view)

		1	2	3	4	5	6	7	8	9	10	11	12	13	14
FILE "I"	U	Ø1 1A	Ø2 2A	SLOT EMPTY	SLOT EMPTY	Ø3 3A	Ø4 4A	Ø3 3B	SLOT EMPTY	SYS. DET. S5	SLOT EMPTY	SLOT EMPTY	SLOT EMPTY	SLOT EMPTY	FS DC ISOLATOR
	L	NOT USED	Ø2 2B			NOT USED	NOT USED	NOT USED		SYS. DET. S6					ST DC ISOLATOR
FILE "J"	U	Ø5 5A	Ø6 6A	Ø5 5C	WIRED INPUT ⊗	SLOT EMPTY	SLOT EMPTY	SLOT EMPTY	SLOT EMPTY	SYS. DET. S7	SLOT EMPTY	SLOT EMPTY	SLOT EMPTY	SLOT EMPTY	SLOT EMPTY
	L	Ø5 5B	Ø6 6B	Ø5 5D						SYS. DET. S8					

EX.: 1A, 2A, ETC. = LOOP NO.'S

FS = FLASH SENSE
ST = STOP TIME

⊗ Wired Input - Do not populate slot with detector card

INPUT FILE CONNECTION & PROGRAMMING CHART

LOOP NO.	LOOP TERMINAL	INPUT FILE POS.	PIN NO.	INPUT ASSIGNMENT NO.	DETECTOR NO.	NEMA PHASE	CALL	EXTEND	FULL TIME DELAY	STRETCH TIME	DELAY TIME
1A[1]	TB2-1,2	I1U	56	18	1	1	Y	Y			15
	-	J4U	48	10	26	6	Y	Y	Y		3
2A	TB2-5,6	I2U	39	1	2	2	Y	Y			
2B	TB2-7,8	I2L	43	5	12	2	Y	Y			
3A	TB4-5,6	I5U	58	20	3	3	Y	Y			10
4A	TB4-9,10	I6U	41	3	4	4	Y	Y			
3B	TB6-1,2	I7U	65	27	34	3	Y	Y			15
✳ S5	TB6-9,10	I9U	60	22	11	SYS					
✳ S6	TB6-11,12	I9L	62	24	13	SYS					
5A	TB3-1,2	J1U	55	17	5	5	Y	Y			
5B	TB3-3,4	J1L	55	17	5	5	Y	Y			
6A	TB3-5,6	J2U	40	2	6	6	Y	Y			
6B	TB3-7,8	J2L	44	6	16	6	Y	Y			
5C	TB3-9,10	J3U	64	26	36	5	Y	Y			15
5D	TB3-11,12	J3L	77	39	46	5	Y	Y			15
✳ S7	TB7-9,10	J9U	59	21	15	SYS					
✳ S8	TB7-11,12	J9L	61	23	17	SYS					

[1] Add jumper from I1-W to J4-W, on rear of input file.

✳ System detector only. Remove the vehicle phase assigned to this detector in the default programming.

INPUT FILE POSITION LEGEND: J2L
FILE J
SLOT 2
LOWER

LOAD RESISTOR INSTALLATION DETAIL

(install resistor as shown below)

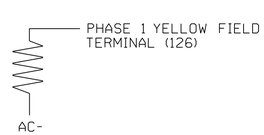

ACCEPTABLE VALUES

VALUE (ohms)	WATTAGE
1.5K - 1.9K	25W (min)
2.0K - 3.0K	10W (min)

THIS ELECTRICAL DETAIL IS FOR
THE SIGNAL DESIGN: Ø4-1412
DESIGNED: January 2018
SEALED: 5/25/2018
REVISED: N/A

Final Design
Electrical Detail - Sheet 1 of 2

DOCUMENT NOT CONSIDERED FINAL UNLESS ALL SIGNATURES COMPLETED

ELECTRICAL AND PROGRAMMING DETAILS FOR:

NC 42
at
SR 1704 (Neuse River Parkway)/
Queen Ann Drive

Division 4 Johnston County Clayton

PLAN DATE: January 2018 REVIEWED BY: J O Deaton
PREPARED BY: M W Yalch REVIEWED BY:

REVISIONS	INIT.	DATE

Prepared for the Offices of: Transportation Mobility and Safety Division, Traffic Engineering Branch, Signals Management Section, State of North Carolina Department of Transportation
750 N.Greenfield Pkwy,Garner,NC 27529

Prepared by
URS
URS Corporation – North Carolina
1600 Perimeter Park Drive
Morrisville, North Carolina 27560
TELEPHONE (919) 461-1100 FAX (919) 461-1415
NC LICENSE • C-2243

NORTH CAROLINA PROFESSIONAL SEAL 07438 ENGINEER JAMES O. DEATON

DocuSigned by: James O Deaton 40FF8AC430BD40F... 5/25/2018

SIG. INVENTORY NO. 04-1412

5/25/2018
L:\Morrisville\Jobs\R3825B\Traffic\Signals\Electricals\04-1412fe-00-192.dgn
coxst

DocuSign Envelope ID: EDEA80FB-80A3-45F4-B6C8-CD80310DC6C8

PROJECT REFERENCE NO.	SHEET NO.
R-3825B	Sig. 10.2

LOGICAL I/O PROCESSOR PROGRAMMING DETAIL TO PRODUCE SPECIAL FYA-PPLT SIGNAL SEQUENCE

(program controller as shown below)

1. FROM MAIN MENU PRESS '2' (PHASE CONTROL), THEN '1' (PHASE CONTROL FUNCTIONS). SCROLL TO THE BOTTOM OF THE MENU AND ENABLE ACT LOGIC COMMANDS 1, 2 AND 3.

2. FROM MAIN MENU PRESS '6' (OUTPUTS), THEN '3' (LOGICAL I/O PROCESSOR).

```
  LOGICAL I/O COMMAND #1  (+/-COMMAND#)
IF  ACTIVE PHASE       #1  IS ON
AND RED CLEAR ON PHASE #1  IS ON

                 SCROLL DOWN

THEN:
SET OUTPUT  ASSIGNMENT #50 ON
SET OUTPUT  ASSIGNMENT #51 OFF
```

NOTE: LOGIC FOR PHASE 1 RED CLEAR WHEN TRANSITIONING FROM PHASE 1 TO PHASE 2 (HEAD 11).

PRESS '+'

```
  LOGICAL I/O COMMAND #2  (+/-COMMAND#)
IF  ACTIVE PHASE       #1  IS ON

                 SCROLL DOWN

THEN:
SET OUTPUT  ASSIGNMENT #52 OFF
```

NOTE: LOGIC FOR SWITCHING FLASHING YELLOW ARROW "OFF" DURING PHASE 1 (HEAD 11).

PRESS '+'

```
  LOGICAL I/O COMMAND #3  (+/-COMMAND#)
IF  YELLOW ON PHASE    #1  IS ON

                 SCROLL DOWN

THEN:
SET OUTPUT  ASSIGNMENT #51 ON
```

NOTE: LOGIC FOR YELLOW ARROW CLEARANCE FROM PHASE 1 (HEAD 11).

LOGIC I/O PROCESSOR PROGRAMMING COMPLETE

OUTPUT REFERENCE SCHEDULE

USE TO INTERPRET LOGIC PROCESSOR

OUTPUT 50 = Overlap A Red
OUTPUT 51 = Overlap A Yellow
OUTPUT 52 = Overlap A Green

OVERLAP PROGRAMMING DETAIL

(program controller as shown below)

FROM MAIN MENU PRESS '8' (OVERLAPS), THEN '1' (VEHICLE OVERLAP SETTINGS).

```
 PAGE 1: VEHICLE OVERLAP 'A' SETTINGS
 PHASE:          |123456789101112131415 16
VEH OVL PARENTS:|XX
VEH OVL NOT VEH:|
VEH OVL NOT PED:|
VEH OVL GRN EXT:|
STARTUP COLOR: _ RED  _ YELLOW  _ GREEN
FLASH COLORS:  _ RED  _ YELLOW  X GREEN
SELECT VEHICLE OVERLAP OPTIONS:   (Y/N)
FLASH YELLOW IN CONTROLLER FLASH?...Y
GREEN EXTENSION (0-255 SEC).........0
YELLOW CLEAR (0=PARENT,3-25.5 SEC)..0.0
RED CLEAR (0=PARENT,0.1-25.5 SEC)...0.0
OUTPUT AS PHASE # (0=NONE, 1-16)....0
```

← NOTICE GREEN FLASH

PRESS '+' THREE TIMES

```
 PAGE 1: VEHICLE OVERLAP 'D' SETTINGS
 PHASE:          |123456789101112131415 16
VEH OVL PARENTS:|   XX
VEH OVL NOT VEH:|
VEH OVL NOT PED:|
VEH OVL GRN EXT:|
STARTUP COLOR: _ RED  _ YELLOW  _ GREEN
FLASH COLORS:  _ RED  _ YELLOW  _ GREEN
SELECT VEHICLE OVERLAP OPTIONS:   (Y/N)
FLASH YELLOW IN CONTROLLER FLASH?...N
GREEN EXTENSION (0-255 SEC).........0
YELLOW CLEAR (0=PARENT,3-25.5 SEC)..0.0
RED CLEAR (0=PARENT,0.1-25.5 SEC)...0.0
OUTPUT AS PHASE # (0=NONE, 1-16)....0
```

OVERLAP PROGRAMMING COMPLETE

FLASHER CIRCUIT MODIFICATION DETAIL

IN ORDER TO INSURE THAT SIGNALS FLASH CONCURRENTLY ON THE SAME APPROACH, MAKE THE FOLLOWING FLASHER CIRCUIT CHANGES:

1. ON REAR OF PDA - REMOVE WIRE FROM TERM. T2-4 AND TERMINATE ON T2-2.
2. ON REAR OF PDA - REMOVE WIRE FROM TERM. T2-5 AND TERMINATE ON T2-3.
3. REMOVE FLASHER UNIT 2.

THE CHANGES LISTED ABOVE TIES ALL PHASES AND OVERLAPS TO FLASHER UNIT 1.

THIS ELECTRICAL DETAIL IS FOR
THE SIGNAL DESIGN: 04-1412
DESIGNED: January 2018
SEALED: 5/25/2018
REVISED: N/A

Final Design
Electrical Detail - Sheet 2 of 2

DOCUMENT NOT CONSIDERED FINAL UNLESS ALL SIGNATURES COMPLETED

Prepared by
URS
URS Corporation – North Carolina
1600 Perimeter Park Drive
Morrisville, North Carolina 27560
TELEPHONE (919) 461-1100 FAX (919) 461-1415
NC LICENSE • C-2243

ELECTRICAL AND PROGRAMMING DETAILS FOR:

Prepared for the Offices of:
Transportation Mobility and Safety Division
STATE OF NORTH CAROLINA
DEPARTMENT OF TRANSPORTATION
ITS & Signals Management Section
750 N.Greenfield Pkwy,Garner,NC 27529

NC 42
at
SR 1704 (Neuse River Parkway)/
Queen Ann Drive

Division 4 | Johnston County | Clayton

PLAN DATE:	January 2018	REVIEWED BY:	J O Deaton
PREPARED BY:	M W Yalch	REVIEWED BY:	

REVISIONS	INIT.	DATE

NORTH CAROLINA PROFESSIONAL SEAL 07438 ENGINEER JAMES O. DEATON

DocuSigned by: James O Deaton 5/25/2018
40FF8AC430BD40F...

SIG. INVENTORY NO. 04-1412

5/25/2018
L:\Morrisville\Jobs\R3825B\Traffic\Signals\Electricals\04-1412fe-00-192.dgn
coxsj

DocuSign Envelope ID: EDEA80FB-80A3-45F4-B6C8-CD80310DC6C8

METAL POLE No. 1

PROJECT REFERENCE NO.	SHEET NO.
R-3825B	Sig.10.3

Design Loading for METAL POLE NO. 1, MAST ARM A

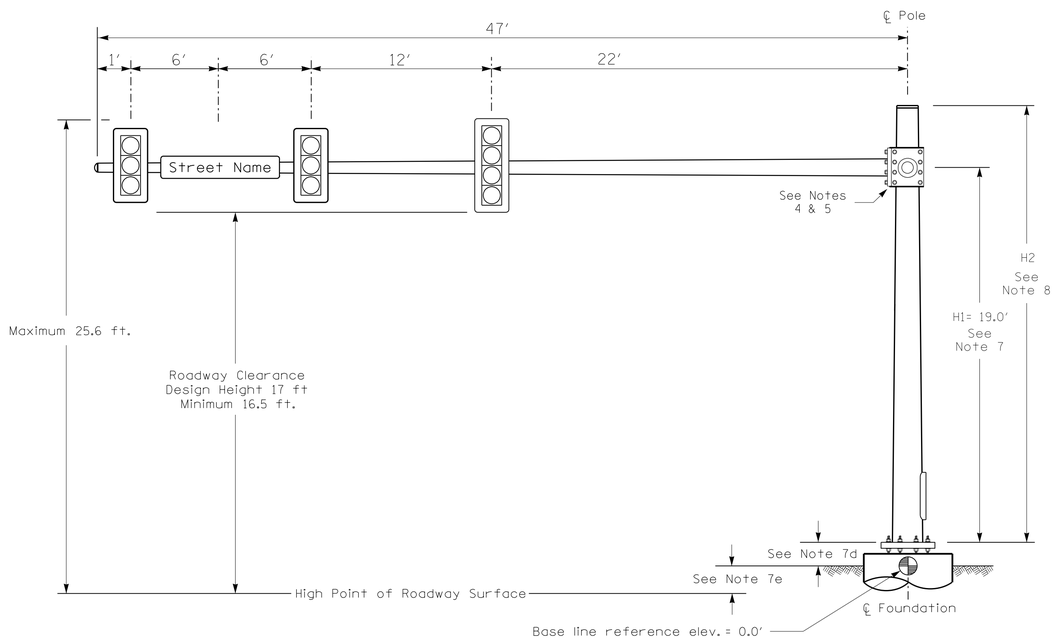

Elevation View @ 270°

Design Loading for METAL POLE NO. 1, MAST ARM B

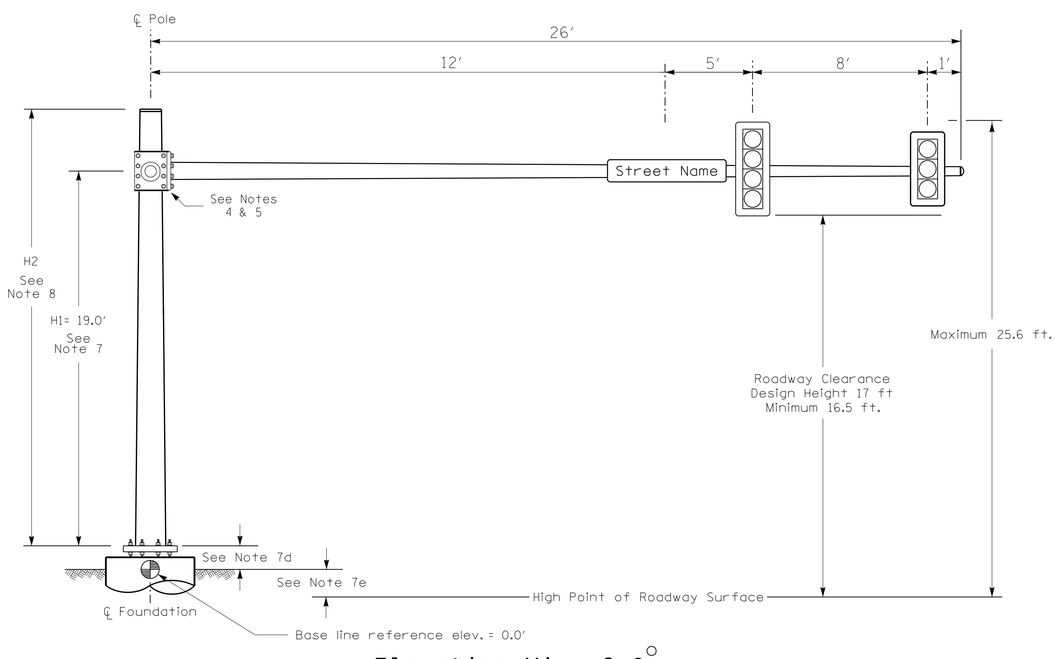

Elevation View @ 0°

SPECIAL NOTE

The contractor is responsible for verifying that the mast arm attachment height (H1) will provide the "Design Height" clearance from the roadway before submitting final shop drawings for approval. Verify elevation data below which was obtained by field measurement or from available project survey data.

Elevation Data for Mast Arm Attachment (H1)

Elevation Differences for:	Arm A	Arm B
Baseline reference point at ℄ Foundation @ ground level	0.0 ft.	0.0 ft.
Elevation difference at High point of roadway surface	+/-0.0 ft.	-0.2 ft.
Elevation difference at Edge of travelway or face of curb	-0.9 ft.	-0.2 ft.

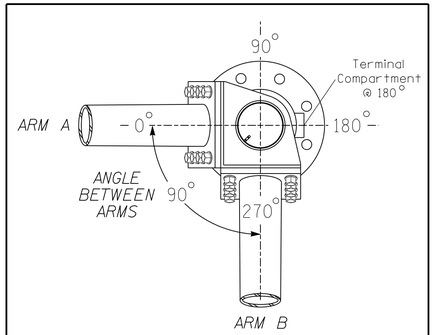

POLE RADIAL ORIENTATION

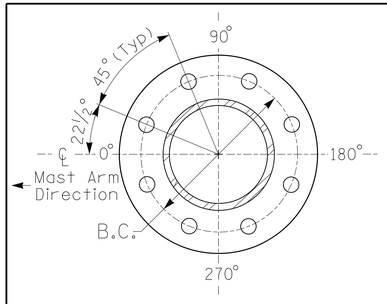

8 BOLT BASE PLATE DETAIL

See Note 6

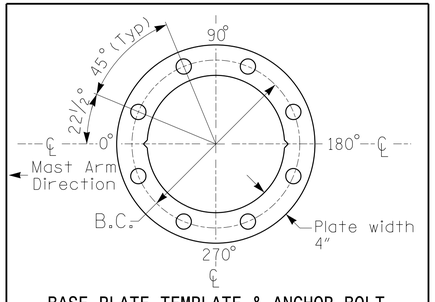

BASE PLATE TEMPLATE & ANCHOR BOLT LOCK PLATE DETAIL

For 8 Bolt Base Plate

MAST ARM LOADING SCHEDULE

LOADING SYMBOL	DESCRIPTION	AREA	SIZE	WEIGHT
	RIGID MOUNTED SIGNAL HEAD 12″-4 SECTION-WITH BACKPLATE	11.5 S.F.	25.5″ W X 66.0″ L	74 LBS
	RIGID MOUNTED SIGNAL HEAD 12″-3 SECTION-WITH BACKPLATE	9.3 S.F.	25.5″ W X 52.5″ L	60 LBS
	RIGID MOUNTED SIGNAL HEAD 12″-5 SECTION-WITH BACKPLATE	16.3 S.F.	42.0″ W X 56.0″ L	103 LBS
Street Name	STREET NAME SIGN RIGID MOUNTED	12.0 S.F.	18.0″ W X 96.0″ L	27 LBS

NOTES

DESIGN REFERENCE MATERIAL

1. Design the traffic signal structure and foundation in accordance with:
   The 6th Edition 2013 AASHTO "Standard Specifications for Structural Supports for Highway Signs, Luminaires, and Traffic Signals, including all of the latest interim revisions.
   The 2018 NCDOT "Standard Specifications for Roads and Structures." The latest addenda to the specifications can be found in the traffic signal project special provisions.
   The 2018 NCDOT Roadway Standard Drawings.
   The traffic signal project plans and special provisions.
   The NCDOT "Metal Pole Standards" located at the following NCDOT website:
   https://connect.ncdot.gov/resources/safety/Pages/ITS-Design-Resources.aspx

DESIGN REQUIREMENTS

2. Design the traffic signal structure using the loading conditions shown in the elevation views. These are anticipated worst case "design loads" and may not represent the actual loads that will be applied at the time of the installation. The contractor should refer to the traffic signal plans for the actual loads that will be applied at the time of the installation.
3. Design all signal supports using stress ratios that do not exceed 0.9.
4. The camber design for the mast arm deflection should provide an appearance of a low pitched arch where the tip or the free end of the mast arm does not deflect below horizontal when fully loaded.
5. A clamp-type bolted mast arm-to-pole connection may be used instead of the welded ring stiffened box connection shown as long as the connection meets all of the design requirements. This requires staggering the connections. Use elevation data for each arm to determine appropriate arm connection points.
6. Design base plate with 8 anchor bolt holes. Provide 2 inch x 60 inch anchor bolts.
7. The mast arm attachment height (H1) shown is based on the following design assumptions:
   a. Mast arm slope and deflection are not considered in determining the arm attachment height as they are assumed to offset each other.
   b. Signal heads are rigidly mounted and vertically centered on the mast arm.
   c. The roadway clearance height for design is as shown in the elevation views.
   d. The top of the pole base plate is 0.75 feet above the ground elevation.
   e. Refer to the Elevation Data Chart for the elevation differences between the proposed foundation ground level and the high point of the roadway.
8. The pole manufacturer will determine the total height (H2) of each pole using the greater of the following:
   Mast arm attachment height (H1) plus 2 feet, or
   H1 plus 1/2 of the total height of the mast arm attachment assembly plus 1 foot.
9. If pole location adjustments are required, the contractor must gain approval from the Engineer as this may affect the mast arm lengths and arm attachment heights. The contractor may contact the Signal Design Section Senior Structural Engineer for assistance at (919) 814-5000.
10. The contractor is responsible for verifying that the mast arm length shown will allow proper positioning of the signal heads over the roadway.
11. The contractor is responsible for providing soil penetration testing data (SPT) to the pole manufacturer so site specific foundations can be designed.

All metal poles and arms should be black in color as specified in the project special provisions.

Prepared by
URS
URS Corporation – North Carolina
1600 Perimeter Park Drive
Morrisville, North Carolina 27560
TELEPHONE (919) 461-1100 FAX (919) 461-1415
NC LICENSE • C-2243

NCDOT Wind Zone 3 (110 mph)

DOCUMENT NOT CONSIDERED FINAL UNLESS ALL SIGNATURES COMPLETED

Prepared for the Offices of:
Transportation Mobility and Safety Division
Signal Design Section
750 N.Greenfield Pkwy,Garner,NC 27529

NC 42
at
SR 1704 (Neuse River Parkway)/
Queen Ann Drive

Division 4 Johnston County Clayton

PLAN DATE:	January 2018	REVIEWED BY:	C. L. Kalencik
PREPARED BY:	S. W. Cox	REVIEWED BY:	

SCALE 0 N/A N/A

REVISIONS | INIT. | DATE

NORTH CAROLINA PROFESSIONAL SEAL 040715 ENGINEER COURTNEY L. KALENCIK

DocuSigned by: Courtney L. Kalencik 0FE915BCE2864FE... 5/25/2018

SIG. INVENTORY NO. 04-1412

5/25/2018
L:\Work\SwilleW\Obs1\R3825B\Traffic\Signals\R041412_data_m1.dgn
CSXS1

DocuSign Envelope ID: EDEA80FB-80A3-45F4-B6C8-CD80310DC6C8

METAL POLE No. 2

PROJECT REFERENCE NO.	SHEET NO.
R-3825B	Sig.10.4

Design Loading for METAL POLE NO. 2, MAST ARM A

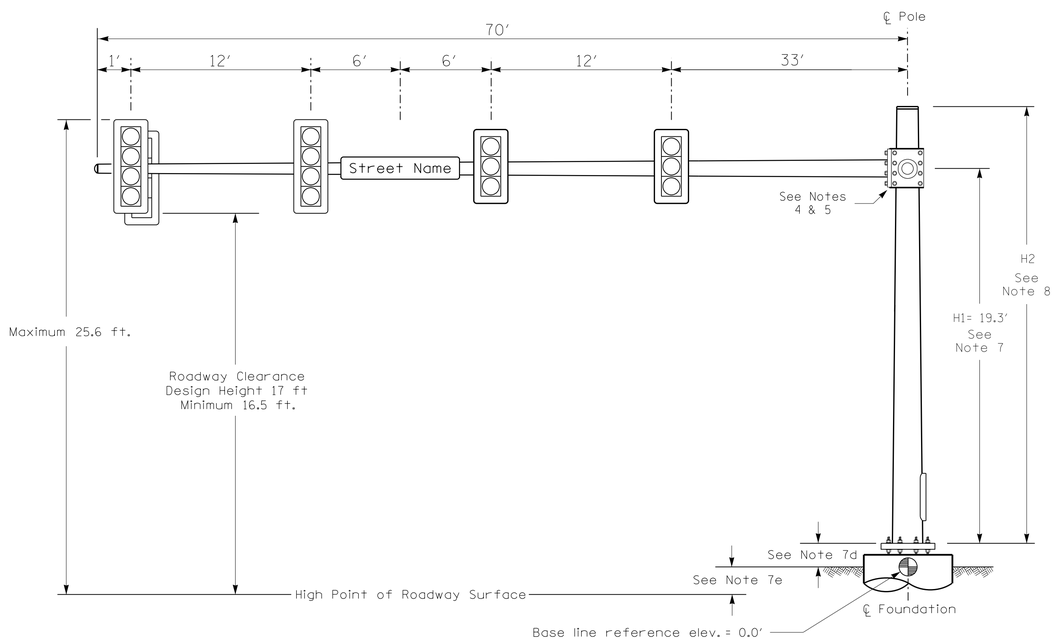

Elevation View @ 270°

Design Loading for METAL POLE NO. 2, MAST ARM B

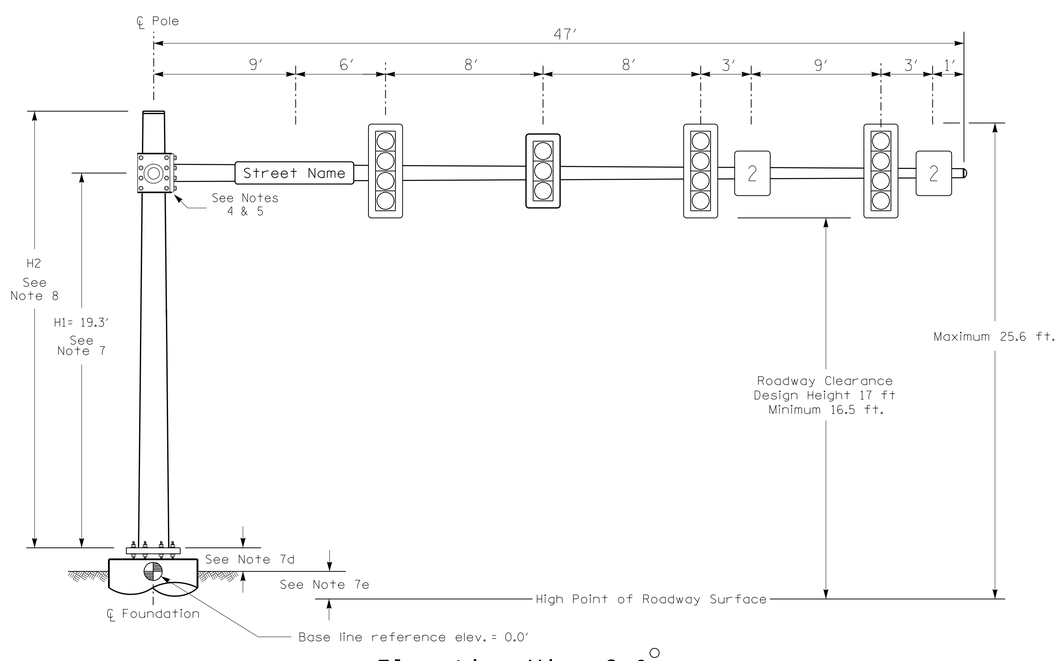

Elevation View @ 0°

SPECIAL NOTE

The contractor is responsible for verifying that the mast arm attachment height (H1) will provide the "Design Height" clearance from the roadway before submitting final shop drawings for approval. Verify elevation data below which was obtained by field measurement or from available project survey data.

Elevation Data for Mast Arm Attachment (H1)

Elevation Differences for:	Arm A	Arm B
Baseline reference point at ℄ Foundation @ ground level	0.0 ft.	0.0 ft.
Elevation difference at High point of roadway surface	+0.3 ft.	-0.5 ft.
Elevation difference at Edge of travelway or face of curb	-0.5 ft.	-0.7 ft.

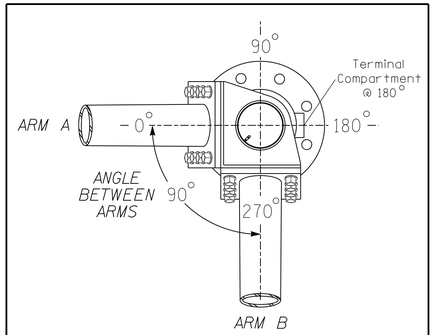

POLE RADIAL ORIENTATION

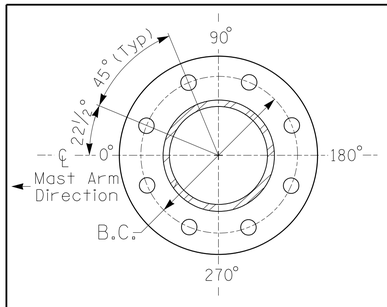

8 BOLT BASE PLATE DETAIL

See Note 6

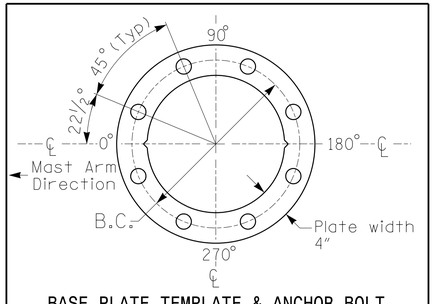

BASE PLATE TEMPLATE & ANCHOR BOLT LOCK PLATE DETAIL

For 8 Bolt Base Plate

MAST ARM LOADING SCHEDULE

LOADING SYMBOL	DESCRIPTION	AREA	SIZE	WEIGHT
	RIGID MOUNTED SIGNAL HEAD 12″-4 SECTION-WITH BACKPLATE	11.5 S.F.	25.5″W X 66.0″L	74 LBS
	RIGID MOUNTED SIGNAL HEAD 12″-3 SECTION-WITH BACKPLATE	9.3 S.F.	25.5″W X 52.5″L	60 LBS
Street Name	STREET NAME SIGN RIGID MOUNTED	16.0 S.F.	24.0″W X 96.0″L	36 LBS
2	SIGN RIGID MOUNTED	7.5 S.F.	30.0″W X 36.0″L	14 LBS

NOTES

DESIGN REFERENCE MATERIAL

1. Design the traffic signal structure and foundation in accordance with:
   - The 6th Edition 2013 AASHTO "Standard Specifications for Structural Supports for Highway Signs, Luminaires, and Traffic Signals, including all of the latest interim revisions.
   - The 2018 NCDOT "Standard Specifications for Roads and Structures." The latest addenda to the specifications can be found in the traffic signal project special provisions.
   - The 2018 NCDOT Roadway Standard Drawings.
   - The traffic signal project plans and special provisions.
   - The NCDOT "Metal Pole Standards" located at the following NCDOT website: https://connect.ncdot.gov/resources/safety/Pages/ITS-Design-Resources.aspx

DESIGN REQUIREMENTS

2. Design the traffic signal structure using the loading conditions shown in the elevation views. These are anticipated worst case "design loads" and may not represent the actual loads that will be applied at the time of the installation. The contractor should refer to the traffic signal plans for the actual loads that will be applied at the time of the installation.
3. Design all signal supports using stress ratios that do not exceed 0.9.
4. The camber design for the mast arm deflection should provide an appearance of a low pitched arch where the tip or the free end of the mast arm does not deflect below horizontal when fully loaded.
5. A clamp-type bolted mast arm-to-pole connection may be used instead of the welded ring stiffened box connection shown as long as the connection meets all of the design requirements. This requires staggering the connections. Use elevation data for each arm to determine appropriate arm connection points.
6. Design base plate with 8 anchor bolt holes. Provide 2 inch x 60 inch anchor bolts.
7. The mast arm attachment height (H1) shown is based on the following design assumptions:
   a. Mast arm slope and deflection are not considered in determining the arm attachment height as they are assumed to offset each other.
   b. Signal heads are rigidly mounted and vertically centered on the mast arm.
   c. The roadway clearance height for design is as shown in the elevation views.
   d. The top of the pole base plate is 0.75 feet above the ground elevation.
   e. Refer to the Elevation Data Chart for the elevation differences between the proposed foundation ground level and the high point of the roadway.
8. The pole manufacturer will determine the total height (H2) of each pole using the greater of the following:
   Mast arm attachment height (H1) plus 2 feet, or
   H1 plus 1/2 of the total height of the mast arm attachment assembly plus 1 foot.
9. If pole location adjustments are required, the contractor must gain approval from the Engineer as this may affect the mast arm lengths and arm attachment heights. The contractor may contact the Signal Design Section Senior Structural Engineer for assistance at (919) 814-5000.
10. The contractor is responsible for verifying that the mast arm length shown will allow proper positioning of the signal heads over the roadway.
11. The contractor is responsible for providing soil penetration testing data (SPT) to the pole manufacturer so site specific foundations can be designed.

All metal poles and arms should be black in color as specified in the project special provisions.

Prepared by
URS
URS Corporation – North Carolina
1600 Perimeter Park Drive
Morrisville, North Carolina 27560
TELEPHONE (919) 461-1100 FAX (919) 461-1415
NC LICENSE • C-3243

NCDOT Wind Zone 3 (110 mph)

DOCUMENT NOT CONSIDERED FINAL UNLESS ALL SIGNATURES COMPLETED

Prepared for the Offices of:
Transportation Mobility and Safety Division
STATE OF NORTH CAROLINA DEPARTMENT OF TRANSPORTATION
Signal Design Section
750 N.Greenfield Pkwy,Garner,NC 27529

NC 42
at
SR 1704 (Neuse River Parkway)/
Queen Ann Drive

Division 4 Johnston County Clayton

PLAN DATE: January 2018	REVIEWED BY: C. L. Kalencik
PREPARED BY: S. W. Cox	REVIEWED BY:

SCALE 0 N/A

N/A

REVISIONS	INIT.	DATE

NORTH CAROLINA PROFESSIONAL SEAL 040715 ENGINEER COURTNEY L. KALENCIK

DocuSigned by: Courtney L. Kalencik 5/25/2018
0FE9158CE2964FE...

SIG. INVENTORY NO. 04-1412

5/25/2018
L:\Workfolders\jobs\M038258\Traffic\Signals\041412_date_m2.dgn
COXSI

DocuSign Envelope ID: EDEA80FB-80A3-45F4-B6C8-CD80310DC6C8

PROJECT REFERENCE NO.	SHEET NO.
R-3825B	Sig.11.0

PHASING DIAGRAM

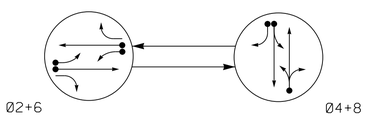

PHASING DIAGRAM DETECTION LEGEND

- DETECTED MOVEMENT
- UNDETECTED MOVEMENT (OVERLAP)
- UNSIGNALIZED MOVEMENT
- PEDESTRIAN MOVEMENT

TABLE OF OPERATION

SIGNAL FACE	PHASE Ø2+6	PHASE Ø4+8	FLASH
21	~~F Y~~	~~R~~	~~Y~~
22, 23	G	R	Y
41, 42, 43	R	G	R
61	~~F Y~~	~~R~~	~~Y~~
62, 63	G	R	Y
81, 82	R	G	R

SIGNAL FACE I.D.

All Heads L.E.D.

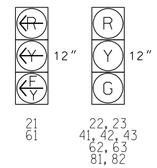

OASIS 2070 LOOP & DETECTOR INSTALLATION CHART

INDUCTIVE LOOPS					DETECTOR PROGRAMMING							
LOOP	SIZE (FT)	DISTANCE FROM STOPBAR (FT)	TURNS	NEW LOOP	PHASE	CALLING	EXTENSION	FULL TIME DELAY	STRETCH TIME	DELAY TIME	SYSTEM LOOP	NEW CARD
2A	6X6	420	*	Y	2	Y	Y	-	-	-	-	*
2B	6X40	0	*	Y	2	Y	Y	Y	-	3	-	*
2C	6X40	0	*	Y	2	Y	Y	Y	2.0	5	-	*
4A	6X40	0	*	Y	4	Y	Y	-	-	3	-	*
4B	6X40	0	*	Y	4	Y	Y	-	-	15	-	*
6A	6X6	420	*	Y	6	Y	Y	-	-	-	-	*
6B	6X40	0	*	Y	6	Y	Y	Y	-	3	-	*
6C	6X40	0	*	Y	6	Y	Y	Y	2.0	5	-	*
8A	12X40	0	*	Y	8	Y	Y	-	-	10	-	*
8B	12X6	0	*	Y	8	Y	Y	-	-	15	-	*

* Video Detection Zone

2 Phase
Fully Actuated
Isolated

NOTES

1. Refer to "Roadway Standard Drawings NCDOT" dated January 2018, "Standard Specifications for Roads and Structures" dated January 2018.
2. Do not program signal for late night flashing operation unless otherwise directed by the Engineer.
3. Set all detector units to presence mode.
4. Locate new cabinet so as not to obstruct sight distance of vehicles turning right on red.

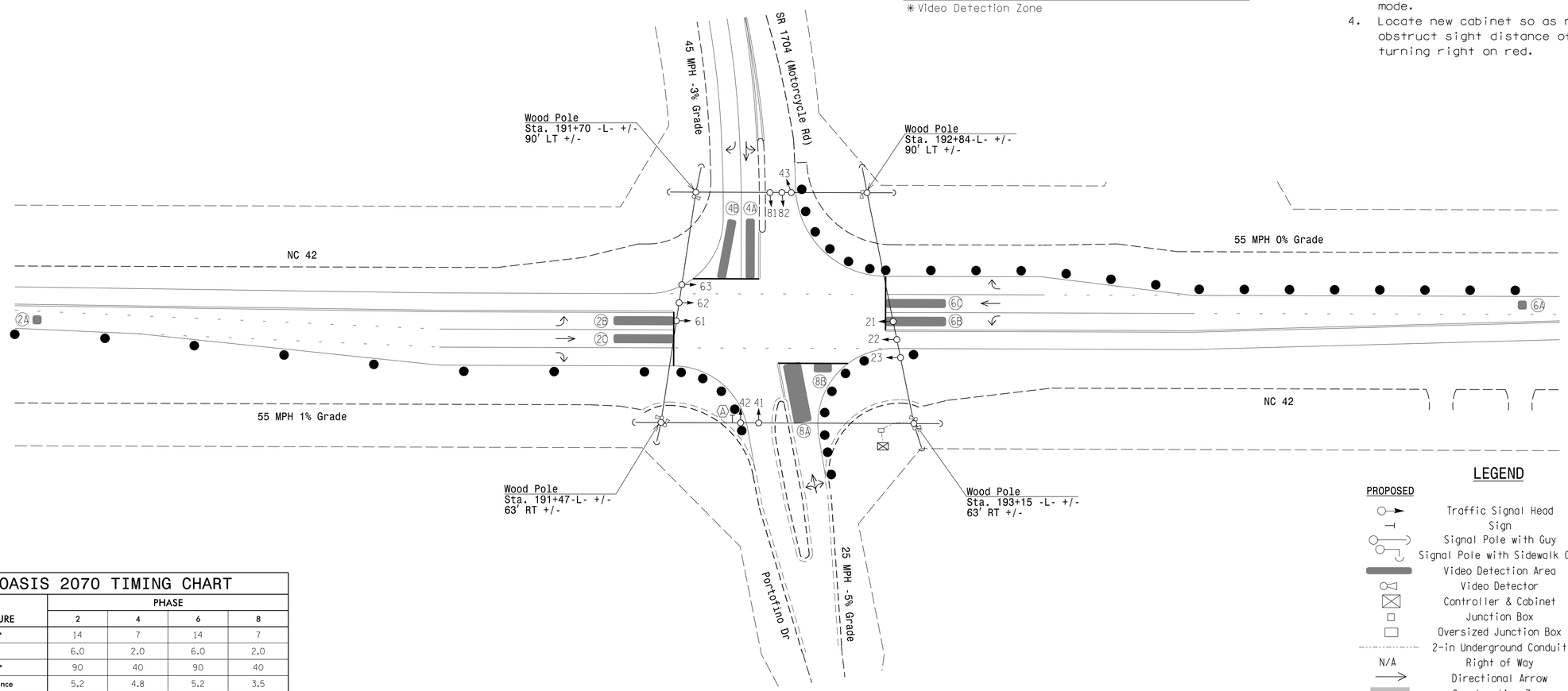

LEGEND

PROPOSED		EXISTING
	Traffic Signal Head	
	Sign	
	Signal Pole with Guy	
	Signal Pole with Sidewalk Guy	
	Video Detection Area	
	Video Detector	
	Controller & Cabinet	
	Junction Box	
	Oversized Junction Box	
	2-in Underground Conduit	
N/A	Right of Way	
	Directional Arrow	
	Construction Zone	
	Construction Drums	N/A
A	Right Arrow "ONLY" Sign (R3-5R)	A

OASIS 2070 TIMING CHART

FEATURE	PHASE 2	PHASE 4	PHASE 6	PHASE 8
Min Green 1 *	14	7	14	7
Extension 1 *	6.0	2.0	6.0	2.0
Max Green 1 *	90	40	90	40
Yellow Clearance	5.2	4.8	5.2	3.5
Red Clearance	1.4	1.0	1.4	2.0
Red Revert	2.0	2.0	2.0	2.0
Walk 1 *	-	-	-	-
Don't Walk 1	-	-	-	-
Seconds Per Actuation *	-	-	-	-
Max Variable Initial *	-	-	-	-
Time Before Reduction *	15	-	15	-
Time To Reduce *	30	-	30	-
Minimum Gap	3.4	-	3.4	-
Recall Mode	MIN RECALL	-	MIN RECALL	-
Vehicle Call Memory	-	-	-	-
Dual Entry	-	ON	-	ON
Simultaneous Gap	ON	ON	ON	ON

* These values may be field adjusted. Do not adjust Min Green and Extension times for phases 2 and 6 lower than what is shown. Min Green for all other phases should not be lower than 4 seconds.

New Installation - Temporary Design 1 (TMP Phase I)

DOCUMENT NOT CONSIDERED FINAL UNLESS ALL SIGNATURES COMPLETED

Prepared by
URS
URS Corporation – North Carolina
1600 Perimeter Park Drive
Morrisville, North Carolina 27560
TELEPHONE (919) 461-1100 FAX (919) 461-1415
NC LICENSE • C-2243

Prepared for the Offices of:
Transportation Mobility and Safety Division
Signal Design Section
750 N.Greenfield Pkwy,Garner,NC 27529

NC 42 at SR 1704 (Motorcycle Rd)/ Portofino Dr

Division 4 Johnston County Clayton

PLAN DATE: January 2018 REVIEWED BY: C. L. Kalencik
PREPARED BY: S. W. Cox REVIEWED BY:

SCALE 1" = 40' (0 – 40)

REVISIONS	INIT.	DATE

NORTH CAROLINA PROFESSIONAL SEAL 040715 ENGINEER COURTNEY L. KALENCIK

DocuSigned by: Courtney L. Kalencik 0FE9158CE2864FE... 5/25/2018

SIG. INVENTORY NO. 04-1423TI

5/25/2018
L:\Work\Traffic\Signals\04142311_sig_dsn_date.dgn
cxxst

DocuSign Envelope ID: EDEA80FB-80A3-45F4-B6C8-CD80310DC6C8

PROJECT REFERENCE NO.	SHEET NO.
R-3825B	Sig. 11.1

EDI MODEL 2018ECL-NC CONFLICT MONITOR PROGRAMMING DETAIL

(remove jumpers and set switches as shown)

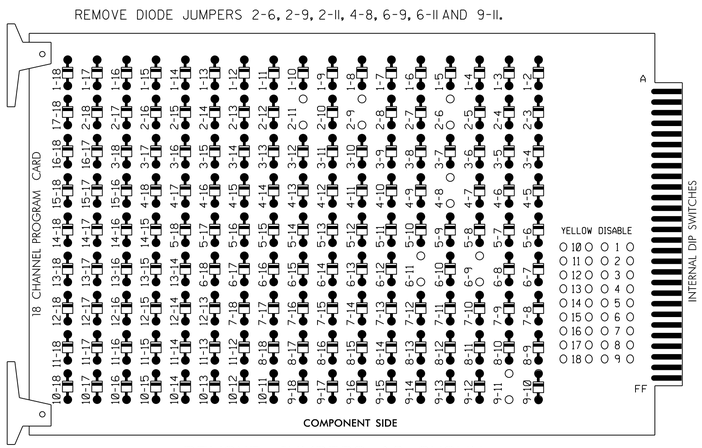

REMOVE JUMPERS AS SHOWN

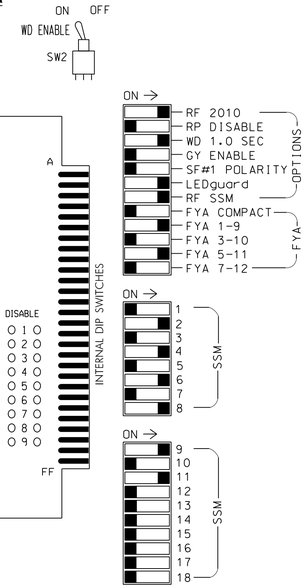

NOTES:

1. Card is provided with all diode jumpers in place. Removal of any jumper allows its channels to run concurrently.
2. Ensure jumpers SEL2-SEL5 and SEL9 are present on the monitor board.
3. Ensure that Red Enable is active at all times during normal operation.
4. Connect serial cable from conflict monitor to comm. port 1 of 2070 controller. Ensure conflict monitor communicates with 2070.

NOTES

1. To prevent "flash-conflict" problems, insert red flash program blocks for all unused vehicle load switches in the output file. The installer shall verify that signal heads flash in accordance with the Signal Plans.
2. Program phases 4 and 8 for Dual Entry.
3. Enable Simultaneous Gap-Out for all Phases.
4. Program phases 2 and 6 for Gap Reduction.
5. Program phases 2 and 6 for Startup In Green.
6. Program phases 2 and 6 for Yellow Flash and overlap 1 as Wag Overlaps.

EQUIPMENT INFORMATION

CONTROLLER.....2070
CABINET.....332 W/ AUX
SOFTWARE.....ECONOLITE OASIS
CABINET MOUNT.....BASE
OUTPUT FILE POSITIONS...18 WITH AUX. OUTPUT FILE
LOAD SWITCHES USED.....S2,S5,S8,S11,AUX S1, AUX S4
PHASES USED.....2,4,6,8
OVERLAP "A".....2
OVERLAP "B".....NOT USED
OVERLAP "C".....6
OVERLAP "D".....NOT USED

SIGNAL HEAD HOOK-UP CHART

LOAD SWITCH NO.	S1	S2	S3	S4	S5	S6	S7	S8	S9	S10	S11	S12	AUX S1	AUX S2	AUX S3	AUX S4	AUX S5	AUX S6
CMU CHANNEL NO.	1	2	13	3	4	14	5	6	15	7	8	16	9	10	17	11	12	18
PHASE	1	2	2 PED	3	4	4 PED	5	6	6 PED	7	8	8 PED	OLA	OLB	SPARE	OLC	OLD	SPARE
SIGNAL HEAD NO.	NU	22,23	NU	NU	41,42, 43	NU	NU	62,63	NU	NU	81,82	NU	61★	NU	NU	21★	NU	NU
RED		128			101			134			107							
YELLOW		129			102			135			108							
GREEN		130			103			136			109							
RED ARROW													A121			A114		
YELLOW ARROW													A122			A115		
FLASHING YELLOW ARROW													A123			A116		
GREEN ARROW																		

NU = Not Used

★ See pictorial of head wiring in detail below.

INPUT FILE POSITION LAYOUT

(front view)

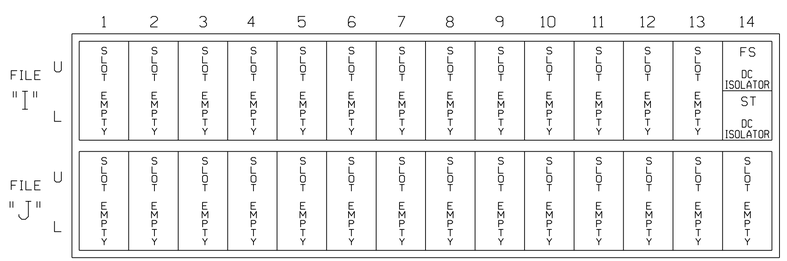

EX.: 1A, 2A, ETC. = LOOP NO.'S

FS = FLASH SENSE
ST = STOP TIME

INPUT FILE POSITION LEGEND: J2L
FILE J
SLOT 2
LOWER

SPECIAL DETECTOR NOTE

Install a video detection system for vehicle detection. Perform installation according to manufacturer's directions and NCDOT engineer-approved mounting locations to accomplish the detection schemes shown on the Signal Design Plans.

OVERLAP PROGRAMMING DETAIL

(program controller as shown below)

FROM MAIN MENU PRESS '8' (OVERLAPS), THEN '1' (VEHICLE OVERLAP SETTINGS).

```
PAGE 1: VEHICLE OVERLAP 'A' SETTINGS
PHASE:          |123456789101112131415 16
VEH OVL PARENTS:| X
VEH OVL NOT VEH:|
VEH OVL NOT PED:|
VEH OVL GRN EXT:|
STARTUP COLOR: _ RED  _ YELLOW  _ GREEN
FLASH COLORS:  _ RED  _ YELLOW  X GREEN
SELECT VEHICLE OVERLAP OPTIONS:   (Y/N)
FLASH YELLOW IN CONTROLLER FLASH?...Y
GREEN EXTENSION (0-255 SEC).........0
YELLOW CLEAR (0=PARENT,3-25.5 SEC)..0.0
RED CLEAR (0=PARENT,0.1-25.5 SEC)...0.0
OUTPUT AS PHASE # (0=NONE, 1-16)....0
```

← NOTICE GREEN FLASH

PRESS '+' TWICE

```
PAGE 1: VEHICLE OVERLAP 'C' SETTINGS
PHASE:          |123456789101112131415 16
VEH OVL PARENTS:|     X
VEH OVL NOT VEH:|
VEH OVL NOT PED:|
VEH OVL GRN EXT:|
STARTUP COLOR: _ RED  _ YELLOW  _ GREEN
FLASH COLORS:  _ RED  _ YELLOW  X GREEN
SELECT VEHICLE OVERLAP OPTIONS:   (Y/N)
FLASH YELLOW IN CONTROLLER FLASH?...Y
GREEN EXTENSION (0-255 SEC).........0
YELLOW CLEAR (0=PARENT,3-25.5 SEC)..0.0
RED CLEAR (0=PARENT,0.1-25.5 SEC)...0.0
OUTPUT AS PHASE # (0=NONE, 1-16)....0
```

← NOTICE GREEN FLASH

OVERLAP PROGRAMMING COMPLETE

FYA SIGNAL WIRING DETAIL

(wire signal heads as shown)

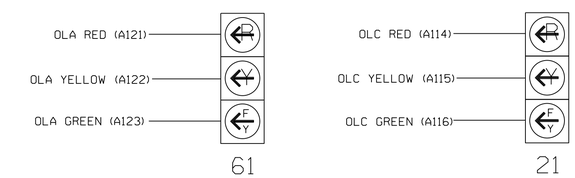

THIS ELECTRICAL DETAIL IS FOR
THE SIGNAL DESIGN: 04-1423T1
DESIGNED: January 2018
SEALED: 5/25/2018
REVISED: N/A

Temporary Design 1 (TMP Phase I)
Electrical Detail

DOCUMENT NOT CONSIDERED FINAL UNLESS ALL SIGNATURES COMPLETED

ELECTRICAL AND PROGRAMMING DETAILS FOR:

NC 42
at
SR 1704 (Motorcycle Rd)/
Portofino Dr

Division 4 | Johnston County | Clayton

PLAN DATE: January 2018 | REVIEWED BY: J O Deaton
PREPARED BY: M W Yalch | REVIEWED BY:

REVISIONS	INIT.	DATE

Prepared for the Offices of:
Traffic Signal Management Section, Mobility and Safety Division, Transportation Systems, State of North Carolina, Department of Transportation
750 N.Greenfield Pkwy,Garner,NC 27529

Prepared by
URS
URS Corporation – North Carolina
1600 Perimeter Park Drive
Morrisville, North Carolina 27560
TELEPHONE (919) 461-1100 FAX (919) 461-1415
NC LICENSE • C-2243

NORTH CAROLINA PROFESSIONAL SEAL 07438 ENGINEER JAMES O. DEATON

DocuSigned by: James O Deaton 5/25/2018
40FF8AC430BD40F...

SIG. INVENTORY NO. 04-1423T1

5/25/2018
L:\Morrisville\Jobs\R3825B\Traffic\Signals\Electricals\04-1423T1e-00-192.dgn
coxsj

DocuSign Envelope ID: EDEA80FB-80A3-45F4-B6C8-CD80310DC6C8

PROJECT REFERENCE NO.	SHEET NO.
R-3825B	Sig.12.0

PHASING DIAGRAM

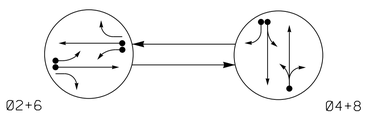

PHASING DIAGRAM DETECTION LEGEND

- DETECTED MOVEMENT
- UNDETECTED MOVEMENT (OVERLAP)
- UNSIGNALIZED MOVEMENT
- PEDESTRIAN MOVEMENT

TABLE OF OPERATION

SIGNAL FACE	PHASE Ø2+6	PHASE Ø4+8	FLASH
21	~~F Y~~	~~R~~	~~Y~~
22, 23	G	R	Y
41, 42, 43	R	G	R
61	~~F Y~~	~~R~~	~~Y~~
62, 63	G	R	Y
81, 82	R	G	R

SIGNAL FACE I.D.

All Heads L.E.D.

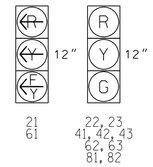

OASIS 2070 LOOP & DETECTOR INSTALLATION CHART

INDUCTIVE LOOPS					DETECTOR PROGRAMMING							
LOOP	SIZE (FT)	DISTANCE FROM STOPBAR (FT)	TURNS	NEW LOOP	PHASE	CALLING	EXTENSION	FULL TIME DELAY	STRETCH TIME	DELAY TIME	SYSTEM LOOP	NEW CARD
2A	6X6	420	*	Y	2	Y	Y	-	-	-	-	*
2B	6X40	0	*	Y	2	Y	Y	Y	-	3	-	*
2C	6X40	0	*	Y	2	Y	Y	Y	2.0	5	-	*
4A	6X40	0	*	-	4	Y	Y	-	-	3	-	*
4B	6X40	0	*	-	4	Y	Y	-	-	15	-	*
6A	6X6	420	*	Y	6	Y	Y	-	-	-	-	*
6B	6X40	0	*	Y	6	Y	Y	Y	-	3	-	*
6C	6X40	0	*	Y	6	Y	Y	Y	2.0	5	-	*
8A	12X40	0	*	Y	8	Y	Y	-	-	10	-	*
8B	12X6	0	*	Y	8	Y	Y	-	-	15	-	*

* Video Detection Zone

2 Phase
Fully Actuated
Isolated

NOTES

1. Refer to "Roadway Standard Drawings NCDOT" dated January 2018, "Standard Specifications for Roads and Structures" dated January 2018.
2. Do not program signal for late night flashing operation unless otherwise directed by the Engineer.
3. Reposition existing signal heads numbered 21, 22, 23, 61, 62, and 63.
4. Set all detector units to presence mode.

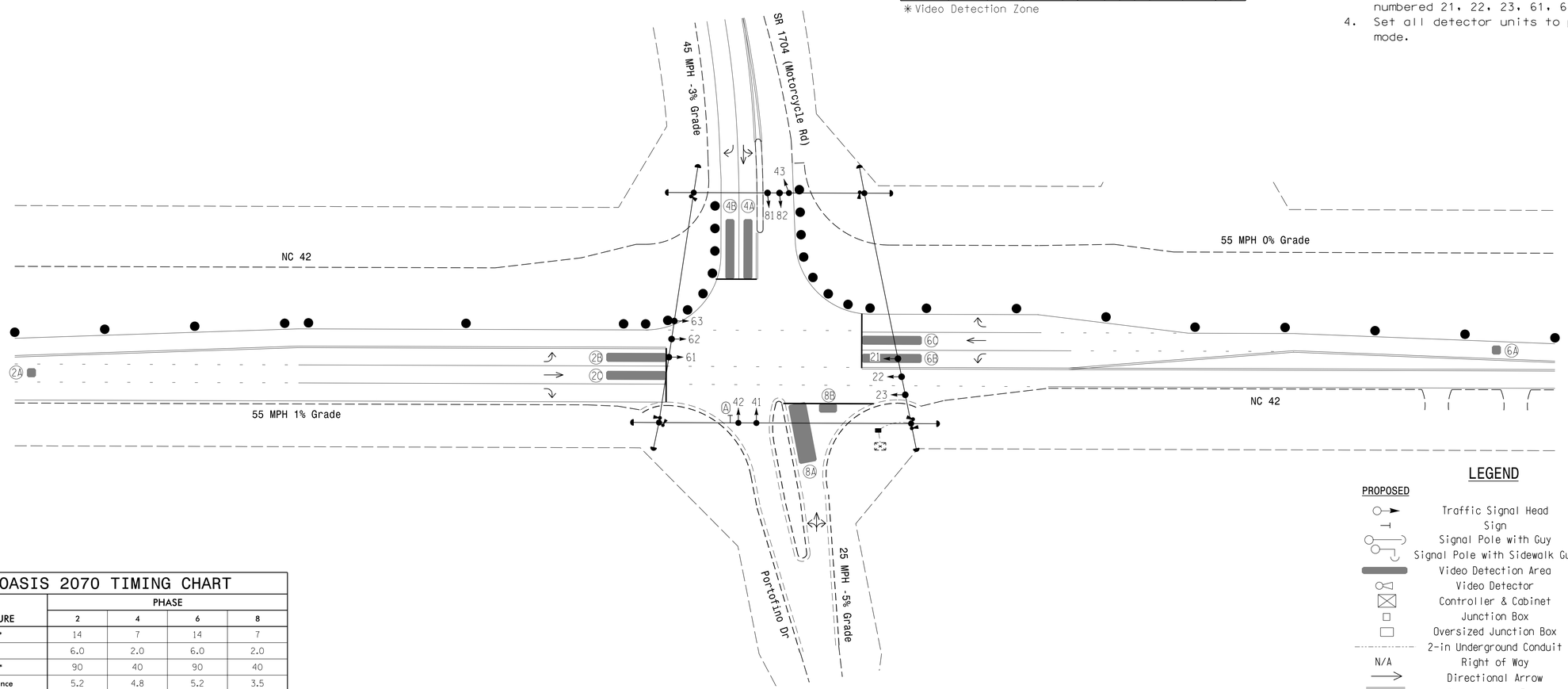

LEGEND

PROPOSED		EXISTING
	Traffic Signal Head	
	Sign	
	Signal Pole with Guy	
	Signal Pole with Sidewalk Guy	
	Video Detection Area	
	Video Detector	
	Controller & Cabinet	
	Junction Box	
	Oversized Junction Box	
	2-in Underground Conduit	
N/A	Right of Way	
	Directional Arrow	
	Construction Zone	
	Construction Drums	N/A
Ⓐ	Right Arrow "ONLY" Sign (R3-5R)	Ⓐ

OASIS 2070 TIMING CHART

FEATURE	PHASE 2	PHASE 4	PHASE 6	PHASE 8
Min Green 1 *	14	7	14	7
Extension 1 *	6.0	2.0	6.0	2.0
Max Green 1 *	90	40	90	40
Yellow Clearance	5.2	4.8	5.2	3.5
Red Clearance	1.3	1.3	1.3	2.1
Red Revert	2.0	2.0	2.0	2.0
Walk 1 *	-	-	-	-
Don't Walk 1	-	-	-	-
Seconds Per Actuation *	-	-	-	-
Max Variable Initial *	-	-	-	-
Time Before Reduction *	15	-	15	-
Time To Reduce *	30	-	30	-
Minimum Gap	3.4	-	3.4	-
Recall Mode	MIN RECALL	-	MIN RECALL	-
Vehicle Call Memory	-	-	-	-
Dual Entry	-	ON	-	ON
Simultaneous Gap	ON	ON	ON	ON

* These values may be field adjusted. Do not adjust Min Green and Extension times for phases 2 and 6 lower than what is shown. Min Green for all other phases should not be lower than 4 seconds.

New Installation - Temporary Design 2 (TMP Phase II)

DOCUMENT NOT CONSIDERED FINAL UNLESS ALL SIGNATURES COMPLETED

Prepared by
URS
URS Corporation – North Carolina
1600 Perimeter Park Drive
Morrisville, North Carolina 27560
TELEPHONE (919) 461-1100 FAX (919) 461-1415
NC LICENSE # C-2243

Prepared for the Offices of:
Transportation Mobility and Safety Division
STATE OF NORTH CAROLINA DEPARTMENT OF TRANSPORTATION
Signal Design Section
750 N.Greenfield Pkwy,Garner,NC 27529

NC 42
at
SR 1704 (Motorcycle Rd)/
Portofino Dr

Division 4 Johnston County Clayton

PLAN DATE: January 2018	REVIEWED BY: C. L. Kalencik
PREPARED BY: S. W. Cox	REVIEWED BY:

SCALE 0 40 1"=40'

REVISIONS	INIT.	DATE

NORTH CAROLINA PROFESSIONAL SEAL 040715 ENGINEER COURTNEY L. KALENCIK

DocuSigned by: Courtney L. Kalencik 5/25/2018
0FE815BCE2B64FE...

SIG. INVENTORY NO. 04-14231T2

5/25/2018
12:44:07 PM
jlillie@jobs1#38258#Traffic#Signals#04142312_sig_dsn_date.dgn
COKST

DocuSign Envelope ID: EDEA80FB-80A3-45F4-B6C8-CD80310DC6C8

PROJECT REFERENCE NO.	SHEET NO.
R-3825B	Sig. 12.1

EDI MODEL 2018ECL-NC CONFLICT MONITOR PROGRAMMING DETAIL

(remove jumpers and set switches as shown)

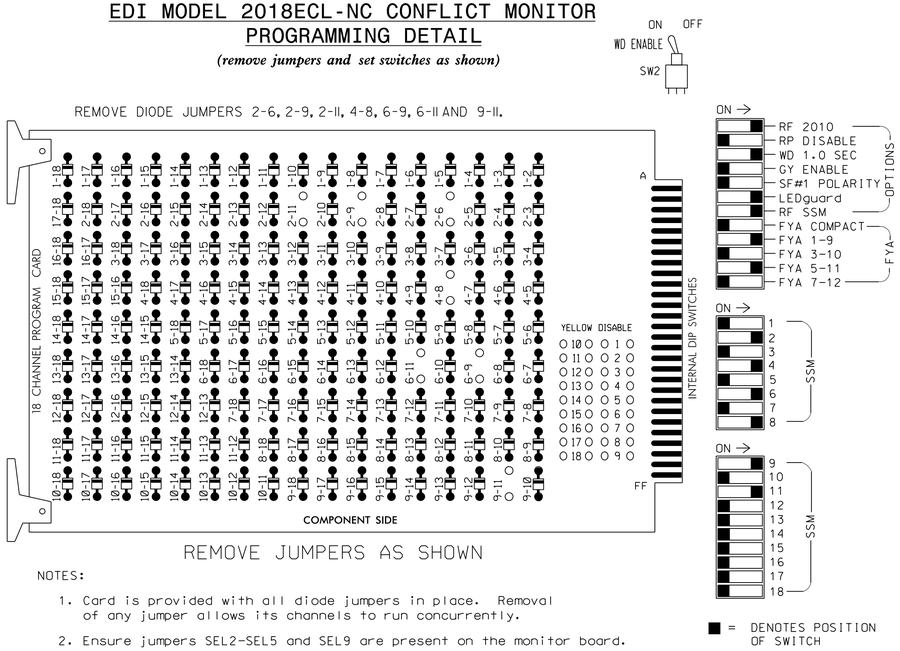

■ = DENOTES POSITION OF SWITCH

NOTES:

1. Card is provided with all diode jumpers in place. Removal of any jumper allows its channels to run concurrently.
2. Ensure jumpers SEL2-SEL5 and SEL9 are present on the monitor board.
3. Ensure that Red Enable is active at all times during normal operation.
4. Connect serial cable from conflict monitor to comm. port 1 of 2070 controller. Ensure conflict monitor communicates with 2070.

NOTES

1. To prevent "flash-conflict" problems, insert red flash program blocks for all unused vehicle load switches in the output file. The installer shall verify that signal heads flash in accordance with the Signal Plans.
2. Program phases 4 and 8 for Dual Entry.
3. Enable Simultaneous Gap-Out for all Phases.
4. Program phases 2 and 6 for Gap Reduction.
5. Program phases 2 and 6 for Startup In Green.
6. Program phases 2 and 6 for Yellow Flash and overlap 1 as Wag Overlaps.

EQUIPMENT INFORMATION

CONTROLLER.....2070
CABINET.....332 W/ AUX
SOFTWARE.....ECONOLITE OASIS
CABINET MOUNT.....BASE
OUTPUT FILE POSITIONS...18 WITH AUX. OUTPUT FILE
LOAD SWITCHES USED.....S2,S5,S8,S11,AUX S1,AUX S4
PHASES USED.....2,4,6,8
OVERLAP "A".....2
OVERLAP "B".....NOT USED
OVERLAP "C".....6
OVERLAP "D".....NOT USED

SIGNAL HEAD HOOK-UP CHART

LOAD SWITCH NO.	S1	S2	S3	S4	S5	S6	S7	S8	S9	S10	S11	S12	AUX S1	AUX S2	AUX S3	AUX S4	AUX S5	AUX S6
CMU CHANNEL NO.	1	2	13	3	4	14	5	6	15	7	8	16	9	10	17	11	12	18
PHASE	1	2	2 PED	3	4	4 PED	5	6	6 PED	7	8	8 PED	OLA	OLB	SPARE	OLC	OLD	SPARE
SIGNAL HEAD NO.	NU	22,23	NU	NU	41,42, 43	NU	NU	62,63	NU	NU	81,82	NU	61★	NU	NU	21★	NU	NU
RED		128			101			134			107							
YELLOW		129			102			135			108							
GREEN		130			103			136			109							
RED ARROW													A121			A114		
YELLOW ARROW													A122			A115		
FLASHING YELLOW ARROW													A123			A116		
GREEN ARROW																		

NU = Not Used

★ See pictorial of head wiring in detail below.

INPUT FILE POSITION LAYOUT

(front view)

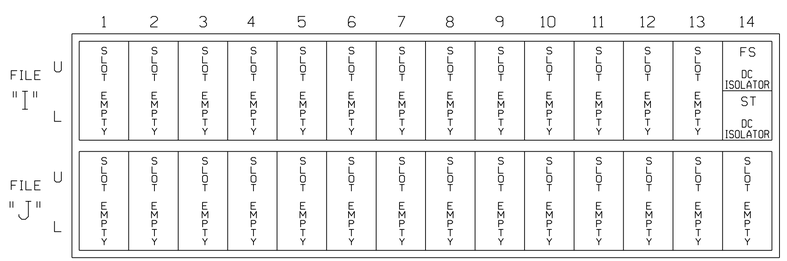

EX.: 1A, 2A, ETC. = LOOP NO.'S

FS = FLASH SENSE
ST = STOP TIME

INPUT FILE POSITION LEGEND: J2L
FILE J
SLOT 2
LOWER

SPECIAL DETECTOR NOTE

Install a video detection system for vehicle detection. Perform installation according to manufacturer's directions and NCDOT engineer-approved mounting locations to accomplish the detection schemes shown on the Signal Design Plans.

OVERLAP PROGRAMMING DETAIL

(program controller as shown below)

FROM MAIN MENU PRESS '8' (OVERLAPS), THEN '1' (VEHICLE OVERLAP SETTINGS).

```
PAGE 1: VEHICLE OVERLAP 'A' SETTINGS
PHASE:          |123456789101112131415 16
VEH OVL PARENTS:| X
VEH OVL NOT VEH:|
VEH OVL NOT PED:|
VEH OVL GRN EXT:|
STARTUP COLOR: _ RED  _ YELLOW  _ GREEN
FLASH COLORS:  _ RED  _ YELLOW  X GREEN
SELECT VEHICLE OVERLAP OPTIONS:   (Y/N)
FLASH YELLOW IN CONTROLLER FLASH?...Y
GREEN EXTENSION (0-255 SEC).........0
YELLOW CLEAR (0=PARENT,3-25.5 SEC)..0.0
RED CLEAR (0=PARENT,0.1-25.5 SEC)...0.0
OUTPUT AS PHASE # (0=NONE, 1-16)....0
```

← NOTICE GREEN FLASH

PRESS '+' TWICE

```
PAGE 1: VEHICLE OVERLAP 'C' SETTINGS
PHASE:          |123456789101112131415 16
VEH OVL PARENTS:|     X
VEH OVL NOT VEH:|
VEH OVL NOT PED:|
VEH OVL GRN EXT:|
STARTUP COLOR: _ RED  _ YELLOW  _ GREEN
FLASH COLORS:  _ RED  _ YELLOW  X GREEN
SELECT VEHICLE OVERLAP OPTIONS:   (Y/N)
FLASH YELLOW IN CONTROLLER FLASH?...Y
GREEN EXTENSION (0-255 SEC).........0
YELLOW CLEAR (0=PARENT,3-25.5 SEC)..0.0
RED CLEAR (0=PARENT,0.1-25.5 SEC)...0.0
OUTPUT AS PHASE # (0=NONE, 1-16)....0
```

← NOTICE GREEN FLASH

OVERLAP PROGRAMMING COMPLETE

FYA SIGNAL WIRING DETAIL

(wire signal heads as shown)

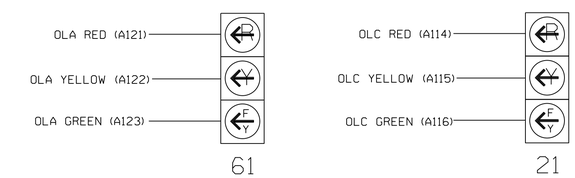

THIS ELECTRICAL DETAIL IS FOR
THE SIGNAL DESIGN: 04-1423T2
DESIGNED: January 2018
SEALED: 5/25/2018
REVISED: N/A

Temporary Design 2 (TMP Phase II)
Electrical Detail

DOCUMENT NOT CONSIDERED FINAL UNLESS ALL SIGNATURES COMPLETED

ELECTRICAL AND PROGRAMMING DETAILS FOR:

NC 42
at
SR 1704 (Motorcycle Rd)/
Portofino Dr

Division 4 Johnston County Clayton

PLAN DATE: January 2018	REVIEWED BY: J O Deaton
PREPARED BY: M W Yalch	REVIEWED BY:

REVISIONS	INIT.	DATE

Prepared for the Offices of:
Traffic Engineering Branch, Signal Design Section, Traffic Management Unit, Division of Highways, State of North Carolina, Department of Transportation, Mobility and Safety Division
750 N.Greenfield Pkwy,Garner,NC 27529

Prepared by
URS
URS Corporation – North Carolina
1600 Perimeter Park Drive
Morrisville, North Carolina 27560
TELEPHONE (919) 461-1100 FAX (919) 461-1415
NC LICENSE • C-2243

NORTH CAROLINA PROFESSIONAL SEAL 07438 ENGINEER JAMES O. DEATON

DocuSigned by: James O Deaton 40FF8AC430BD40F... 5/25/2018

SIG. INVENTORY NO. 04-1423T2

5/25/2018
L:\Morrisville\Jobs\R3825B\Traffic\Signals\Electricals\04-142312e-00-192.dgn
coxsj

DocuSign Envelope ID: EDEA80FB-80A3-45F4-B6C8-CD80310DC6C8

PROJECT REFERENCE NO.	SHEET NO.
R-3825B	Sig.13.0

PHASING DIAGRAM

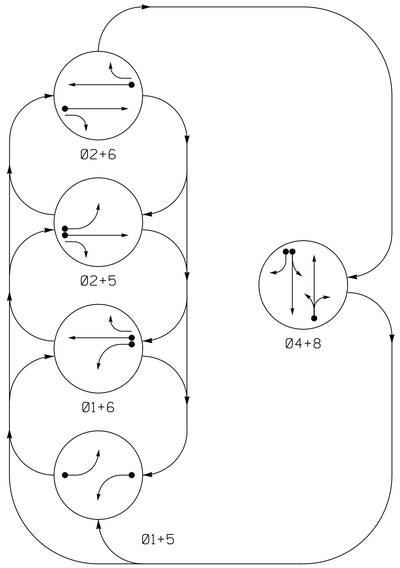

PHASING DIAGRAM DETECTION LEGEND

- DETECTED MOVEMENT
- UNDETECTED MOVEMENT (OVERLAP)
- UNSIGNALIZED MOVEMENT
- PEDESTRIAN MOVEMENT

TABLE OF OPERATION

SIGNAL FACE	PHASE Ø1+5	Ø1+6	Ø2+5	Ø2+6	Ø4+8	FLASH
11	←—	←—	~~R~~	~~R~~	~~R~~	~~R~~
22, 23	G	R	G	G	R	Y
41, 42, 43	R	R	R	R	G	R
51	←—	~~R~~	←—	~~R~~	~~R~~	~~R~~
62, 63	R	G	G	G	R	Y
81, 82	R	R	R	R	G	R

SIGNAL FACE I.D.

All Heads L.E.D.

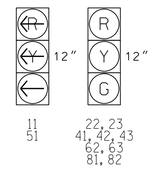

OASIS 2070 LOOP & DETECTOR INSTALLATION CHART

INDUCTIVE LOOPS					DETECTOR PROGRAMMING							
LOOP	SIZE (FT)	DISTANCE FROM STOPBAR (FT)	TURNS	NEW LOOP	PHASE	CALLING	EXTENSION	FULL TIME DELAY	STRETCH TIME	DELAY TIME	SYSTEM LOOP	NEW CARD
1A	6X40	0	✳	Y	1	Y	Y	Y	-	3	-	✳
2A	6X6	420	✳	-	2	Y	Y	-	-	-	-	✳
2C	6X40	0	✳	-	2	Y	Y	Y	2.0	5	-	✳
4A	6X40	0	✳	Y	4	Y	Y	-	-	-	-	✳
4B	6X40	0	✳	Y	4	Y	Y	-	-	15	-	✳
5A	6X40	0	✳	-	5	Y	Y	Y	-	3	-	✳
6A	6X6	420	✳	Y	6	Y	Y	-	-	-	-	✳
6C	6X40	0	✳	Y	6	Y	Y	Y	2.0	5	-	✳
8A	12X40	0	✳	-	8	Y	Y	-	-	10	-	✳
8B	12X6	0	✳	-	8	Y	Y	-	-	15	-	✳

✳ Video Detection Zone

5 Phase
Fully Actuated
Isolated

NOTES

1. Refer to "Roadway Standard Drawings NCDOT" dated January 2018, "Standard Specifications for Roads and Structures" dated January 2018.
2. Do not program signal for late night flashing operation unless otherwise directed by the Engineer.
3. Reposition existing signal heads numbered 62, and 63.
4. Set all detector units to presence mode.

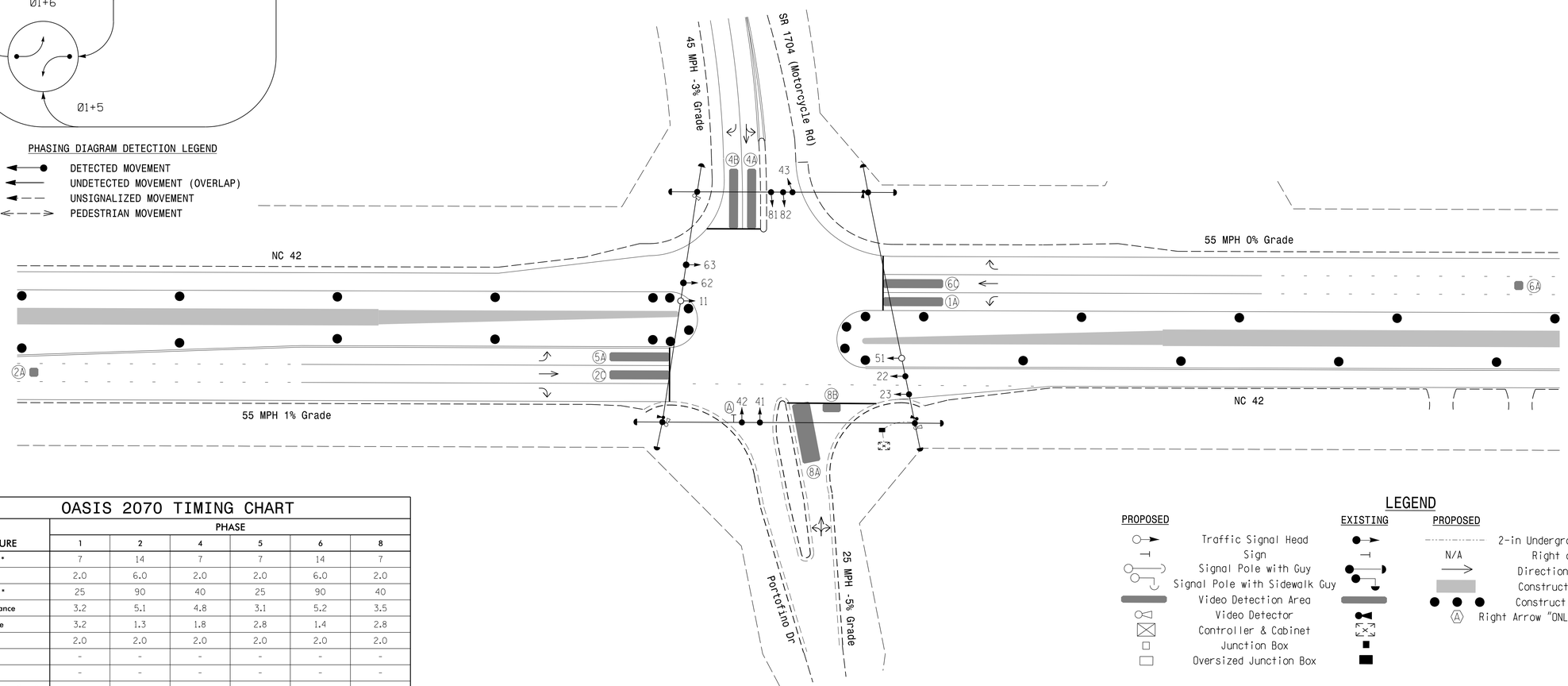

OASIS 2070 TIMING CHART

FEATURE	PHASE 1	2	4	5	6	8
Min Green 1 *	7	14	7	7	14	7
Extension 1 *	2.0	6.0	2.0	2.0	6.0	2.0
Max Green 1 *	25	90	40	25	90	40
Yellow Clearance	3.2	5.1	4.8	3.1	5.2	3.5
Red Clearance	3.2	1.3	1.8	2.8	1.4	2.8
Red Revert	2.0	2.0	2.0	2.0	2.0	2.0
Walk 1 *	-	-	-	-	-	-
Don't Walk 1	-	-	-	-	-	-
Seconds Per Actuation *	-	-	-	-	-	-
Max Variable Initial *	-	-	-	-	-	-
Time Before Reduction *	-	15	-	-	15	-
Time To Reduce *	-	30	-	-	30	-
Minimum Gap	-	3.4	-	-	3.4	-
Recall Mode	-	MIN RECALL	-	-	MIN RECALL	-
Vehicle Call Memory	-	-	-	-	-	-
Dual Entry	-	-	ON	-	-	ON
Simultaneous Gap	ON	ON	ON	ON	ON	ON

* These values may be field adjusted. Do not adjust Min Green and Extension times for phases 2 and 6 lower than what is shown. Min Green for all other phases should not be lower than 4 seconds.

LEGEND

PROPOSED		EXISTING	PROPOSED		EXISTING
	Traffic Signal Head			2-in Underground Conduit	
	Sign		N/A	Right of Way	
	Signal Pole with Guy			Directional Arrow	
	Signal Pole with Sidewalk Guy			Construction Zone	
	Video Detection Area			Construction Drums	N/A
	Video Detector		Ⓐ	Right Arrow "ONLY" Sign (R3-5R)	Ⓐ
	Controller & Cabinet				
	Junction Box				
	Oversized Junction Box				

New Installation - Temporary Design 3 (TMP Phase III)

DOCUMENT NOT CONSIDERED FINAL UNLESS ALL SIGNATURES COMPLETED

Prepared for the Offices of:
Transportation Mobility and Safety Division
Signal Design Section
750 N.Greenfield Pkwy,Garner,NC 27529

NC 42
at
SR 1704 (Motorcycle Rd)/
Portofino Dr

Division 4 Johnston County Clayton

PLAN DATE: January 2018 REVIEWED BY: C. L. Kalencik
PREPARED BY: S. W. Cox REVIEWED BY:

SCALE 0 40 1"=40'

REVISIONS	INIT.	DATE

NORTH CAROLINA PROFESSIONAL SEAL 040715 ENGINEER COURTNEY L. KALENCIK

DocuSigned by: Courtney L. Kalencik 0FE9158CE2864FE... 5/25/2018

SIG. INVENTORY NO. 04-1423T3

Prepared by
URS
URS Corporation – North Carolina
1600 Perimeter Park Drive
Morrisville, North Carolina 27560
TELEPHONE (919) 461-1100 FAX (919) 461-1415
NC LICENSE • C-2243

5/25/2018
L:\Workgroups\Wilmington\Jobs\R3825B\Traffic\Signals\04142373_sig_dsn_date.dgn
cox51

DocuSign Envelope ID: EDEA80FB-80A3-45F4-B6C8-CD80310DC6C8

PROJECT REFERENCE NO.	SHEET NO.
R-3825B	Sig. 13.1

EDI MODEL 2018ECL-NC CONFLICT MONITOR PROGRAMMING DETAIL

(remove jumpers and set switches as shown)

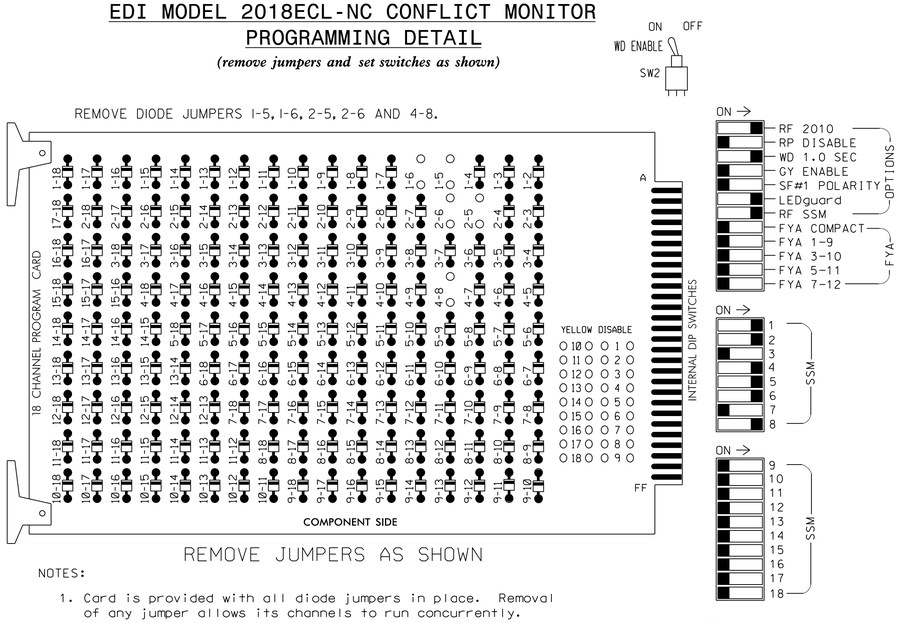

REMOVE JUMPERS AS SHOWN

■ = DENOTES POSITION OF SWITCH

NOTES:

1. Card is provided with all diode jumpers in place. Removal of any jumper allows its channels to run concurrently.
2. Ensure jumpers SEL2-SEL5 and SEL9 are present on the monitor board.
3. Ensure that Red Enable is active at all times during normal operation.
4. Connect serial cable from conflict monitor to comm. port 1 of 2070 controller. Ensure conflict monitor communicates with 2070.

NOTES

1. To prevent "flash-conflict" problems, insert red flash program blocks for all unused vehicle load switches in the output file. The installer shall verify that signal heads flash in accordance with the Signal Plans.
2. Return controller to factory defaults before programming per this electrical detail.
3. Program phases 4 and 8 for Dual Entry.
4. Enable Simultaneous Gap-Out for all Phases.
5. Program phases 2 and 6 for Gap Reduction.
6. Program phases 2 and 6 for Startup in Green.
7. Program phases 2 and 6 for Yellow Flash.

SIGNAL HEAD HOOK-UP CHART

LOAD SWITCH NO.	S1	S2	S3	S4	S5	S6	S7	S8	S9	S10	S11	S12	AUX S1	AUX S2	AUX S3	AUX S4	AUX S5	AUX S6
CMU CHANNEL NO.	1	2	13	3	4	14	5	6	15	7	8	16	9	10	17	11	12	18
PHASE	1	2	2 PED	3	4	4 PED	5	6	6 PED	7	8	8 PED	OLA	OLB	SPARE	OLC	OLD	SPARE
SIGNAL HEAD NO.	11	22,23	NU	NU	41,42, 43	NU	51	62,63	NU	NU	81,82	NU	NU	NU	NU	NU	NU	NU
RED		128			101			134			107							
YELLOW		129			102			135			108							
GREEN		130			103			136			109							
RED ARROW	125						131											
YELLOW ARROW	126						132											
FLASHING YELLOW ARROW																		
GREEN ARROW	127						133											

NU = Not Used

INPUT FILE POSITION LAYOUT

(front view)

		1	2	3	4	5	6	7	8	9	10	11	12	13	14
FILE "I"	U	SLOT EMPTY	SLOT EMPTY	SLOT EMPTY	SLOT EMPTY	SLOT EMPTY	SLOT EMPTY	SLOT EMPTY	SLOT EMPTY	SLOT EMPTY	SLOT EMPTY	SLOT EMPTY	SLOT EMPTY	SLOT EMPTY	FS DC ISOLATOR
	L														ST DC ISOLATOR
FILE "J"	U	SLOT EMPTY	SLOT EMPTY	SLOT EMPTY	SLOT EMPTY	SLOT EMPTY	SLOT EMPTY	SLOT EMPTY	SLOT EMPTY	SLOT EMPTY	SLOT EMPTY	SLOT EMPTY	SLOT EMPTY	SLOT EMPTY	SLOT EMPTY
	L														

EX.: 1A, 2A, ETC. = LOOP NO.'S

FS = FLASH SENSE
ST = STOP TIME

INPUT FILE POSITION LEGEND: J2L
FILE J
SLOT 2
LOWER

EQUIPMENT INFORMATION

CONTROLLER.....2070
CABINET.....332 W/ AUX
SOFTWARE.....ECONOLITE OASIS
CABINET MOUNT.....BASE
OUTPUT FILE POSITIONS...18 WITH AUX. OUTPUT FILE
LOAD SWITCHES USED.....S1,S2,S5,S7,S8,S11
PHASES USED.....1,2,4,5,6,8
OVERLAP "A".....NOT USED
OVERLAP "B".....NOT USED
OVERLAP "C".....NOT USED
OVERLAP "D".....NOT USED

SPECIAL DETECTOR NOTE

Install a video detection system for vehicle detection. Perform installation according to manufacturer's directions and NCDOT engineer-approved mounting locations to accomplish the detection schemes shown on the Signal Design Plans.

THIS ELECTRICAL DETAIL IS FOR
THE SIGNAL DESIGN: 04-1423T3
DESIGNED: January 2018
SEALED: 5/25/2018
REVISED: N/A

Temporary Design 3 (TMP Phase III)
Electrical Detail

DOCUMENT NOT CONSIDERED FINAL UNLESS ALL SIGNATURES COMPLETED

ELECTRICAL AND PROGRAMMING DETAILS FOR:

Prepared for the Offices of:

Traffic Engineering Mobility and Safety Division
Signals Management Section
STATE OF NORTH CAROLINA DEPARTMENT OF TRANSPORTATION

750 N.Greenfield Pkwy,Garner,NC 27529

NC 42 at SR 1704 (Motorcycle Rd)/ Portofino Dr

Division 4 Johnston County Clayton

PLAN DATE: January 2018 REVIEWED BY: J O Deaton
PREPARED BY: M W Yalch REVIEWED BY:

REVISIONS	INIT.	DATE

NORTH CAROLINA PROFESSIONAL SEAL 07438 ENGINEER JAMES O. DEATON

DocuSigned by: James O Deaton 5/25/2018
49FFBAC430BD46F...

SIG. INVENTORY NO. 04-1423T3

Prepared by
URS
URS Corporation – North Carolina
1600 Perimeter Park Drive
Morrisville, North Carolina 27560
TELEPHONE (919) 461-1100 FAX (919) 461-1415
NC LICENSE • C-2243

5/25/2018
L:\Morrisville\Jobs\R3825B\Traffic\Signals\Electricals\04-1423t3e-00-192.dgn
coxst

DocuSign Envelope ID: EDEA80FB-80A3-45F4-B6C8-CD80310DC6C8

PROJECT REFERENCE NO.	SHEET NO.
R-3825B	Sig.14.0

PHASING DIAGRAM

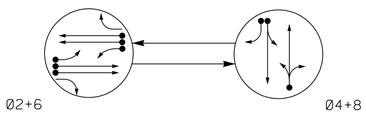

PHASING DIAGRAM DETECTION LEGEND

- DETECTED MOVEMENT
- UNDETECTED MOVEMENT (OVERLAP)
- UNSIGNALIZED MOVEMENT
- PEDESTRIAN MOVEMENT

TABLE OF OPERATION

SIGNAL FACE	PHASE Ø2+6	PHASE Ø4+8	FLASH
21	~~F Y~~	~~R~~	~~Y~~
22, 23	G	R	Y
41, 42, 43	R	G	R
61	~~F Y~~	~~R~~	~~Y~~
62, 63	G	R	Y
81, 82	R	G	R

SIGNAL FACE I.D.

All Heads L.E.D.

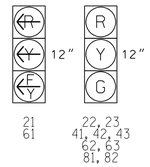

OASIS 2070 LOOP & DETECTOR INSTALLATION CHART

INDUCTIVE LOOPS					DETECTOR PROGRAMMING							
LOOP	SIZE (FT)	DISTANCE FROM STOPBAR (FT)	TURNS	NEW LOOP	PHASE	CALLING	EXTENSION	FULL TIME DELAY	STRETCH TIME	DELAY TIME	SYSTEM LOOP	NEW CARD
2A	6X6	420	6	Y	2	Y	Y	-	-	-	-	Y
2B	6X6	420	6	Y	2	Y	Y	-	-	-	-	Y
2C	6X40	0	2-4-2	Y	2	Y	Y	Y	-	3	-	Y
4A	6X40	0	2-4-2	Y	4	Y	Y	-	-	-	-	Y
4B	6X40	0	2-4-2	Y	4	Y	Y	-	-	15	-	Y
6A	6X6	420	6	Y	6	Y	Y	-	-	-	-	Y
6B	6X6	420	6	Y	6	Y	Y	-	-	-	-	Y
6C	6X40	0	2-4-2	Y	6	Y	Y	Y	-	3	-	Y
8A	6X40	0	2-4-2	Y	8	Y	Y	-	-	10	-	Y
8B	12X6	0	2-4-2	Y	8	Y	Y	-	-	15	-	Y

2 Phase
Fully Actuated
NC 42 (East of Clayton)

NOTES

1. Refer to "Roadway Standard Drawings NCDOT" dated January 2018, "Standard Specifications for Roads and Structures" dated January 2018.
2. Do not program signal for late night flashing operation unless otherwise directed by the Engineer.
3. Set all detector units to presence mode.
4. Maximum times shown in timing chart are for free-run operation only. Coordinated signal system timing values supersede these values.
5. Closed loop system data: Controller Asset #1423.
6. All metal poles and arms should be black in color as specified in the project special provisions.

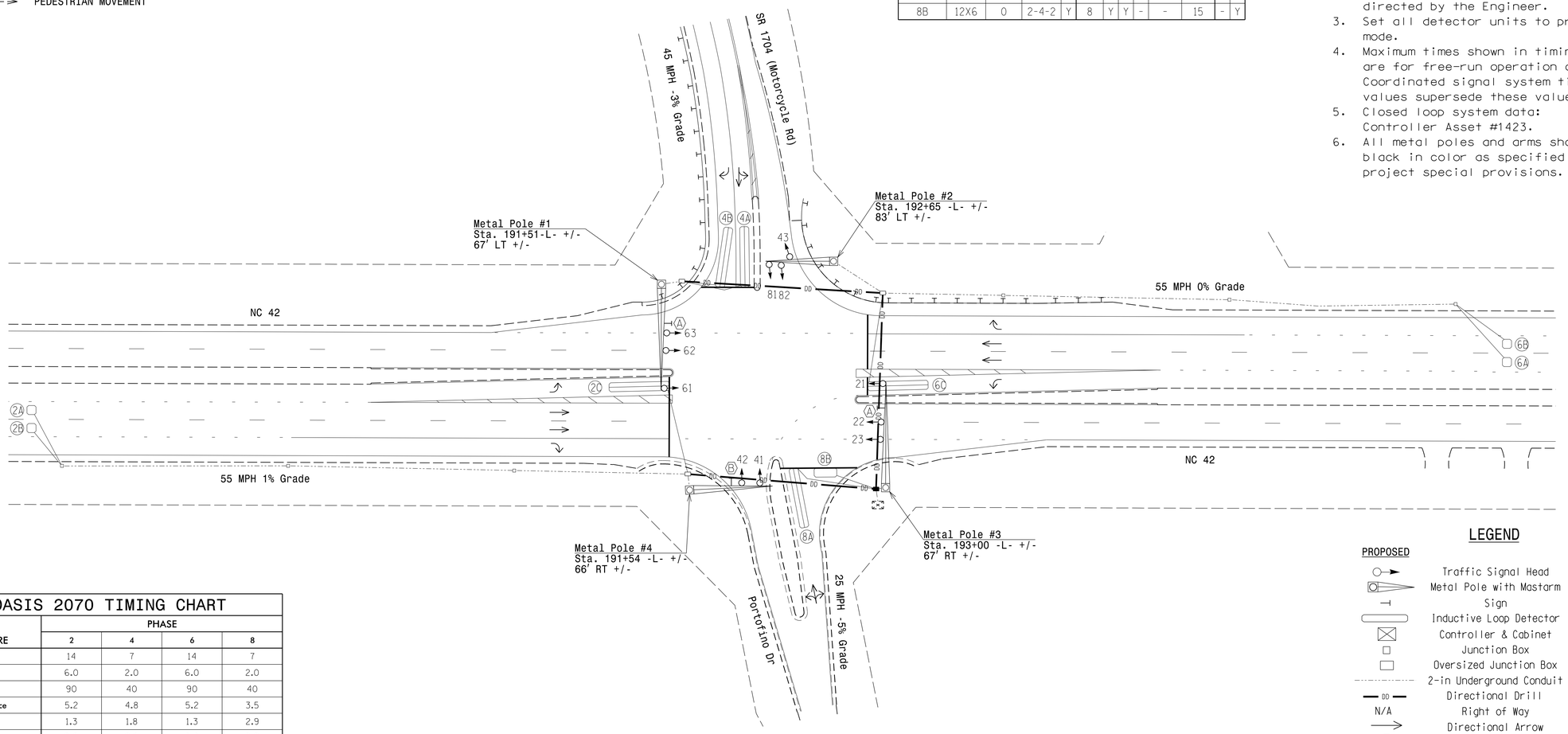

LEGEND

PROPOSED		EXISTING
	Traffic Signal Head	
	Metal Pole with Mastarm	
	Sign	
	Inductive Loop Detector	
	Controller & Cabinet	
	Junction Box	
	Oversized Junction Box	
	2-in Underground Conduit	
DD	Directional Drill	N/A
N/A	Right of Way	
	Directional Arrow	
A	Street Name Sign (D3-1)	A
B	Right Arrow "ONLY" Sign (R3-5R)	B

OASIS 2070 TIMING CHART

FEATURE	PHASE 2	PHASE 4	PHASE 6	PHASE 8
Min Green 1 *	14	7	14	7
Extension 1 *	6.0	2.0	6.0	2.0
Max Green 1 *	90	40	90	40
Yellow Clearance	5.2	4.8	5.2	3.5
Red Clearance	1.3	1.8	1.3	2.9
Red Revert	2.0	2.0	2.0	2.0
Walk 1 *	-	-	-	-
Don't Walk 1	-	-	-	-
Seconds Per Actuation *	1.8	-	1.8	-
Max Variable Initial *	46	-	46	-
Time Before Reduction *	15	-	15	-
Time To Reduce *	30	-	30	-
Minimum Gap	3.4	-	3.4	-
Recall Mode	MIN RECALL	-	MIN RECALL	-
Vehicle Call Memory	YELLOW	-	YELLOW	-
Dual Entry	-	ON	-	ON
Simultaneous Gap	ON	ON	ON	ON

* These values may be field adjusted. Do not adjust Min Green and Extension times for phases 2 and 6 lower than what is shown. Min Green for all other phases should not be lower than 4 seconds.

New Installation - Final Design

DOCUMENT NOT CONSIDERED FINAL UNLESS ALL SIGNATURES COMPLETED

Prepared by
URS
URS Corporation – North Carolina
1600 Perimeter Park Drive
Morrisville, North Carolina 27560
TELEPHONE (919) 461-1100 FAX (919) 461-1415
NC LICENSE # C-2243

Prepared for the Offices of:
Transportation Mobility and Safety Division
Traffic Engineering Branch
Signal Design Section
750 N.Greenfield Pkwy,Garner,NC 27529

NC 42
at
SR 1704 (Motorcycle Rd)/
Portofino Dr

Division 4 Johnston County Clayton

PLAN DATE: January 2018 REVIEWED BY: C. L. Kalencik
PREPARED BY: S. W. Cox REVIEWED BY:

SCALE 0 40 1"=40'

REVISIONS	INIT.	DATE

NORTH CAROLINA PROFESSIONAL SEAL 040715 ENGINEER COURTNEY L. KALENCIK

DocuSigned by: Courtney L. Kalencik 0FE9158CE2864FE... 5/25/2018

SIG. INVENTORY NO. 04-1423

5/25/2018
L:\Work\Raleigh\Jobs\R3825B\Traffic\Signals\041423_sig_dsn_date.dgn
COXSI

DocuSign Envelope ID: EDEA80FB-80A3-45F4-B6C8-CD80310DC6C8

PROJECT REFERENCE NO.	SHEET NO.
R-3825B	Sig. 14.1

EDI MODEL 2018ECL-NC CONFLICT MONITOR PROGRAMMING DETAIL

(remove jumpers and set switches as shown)

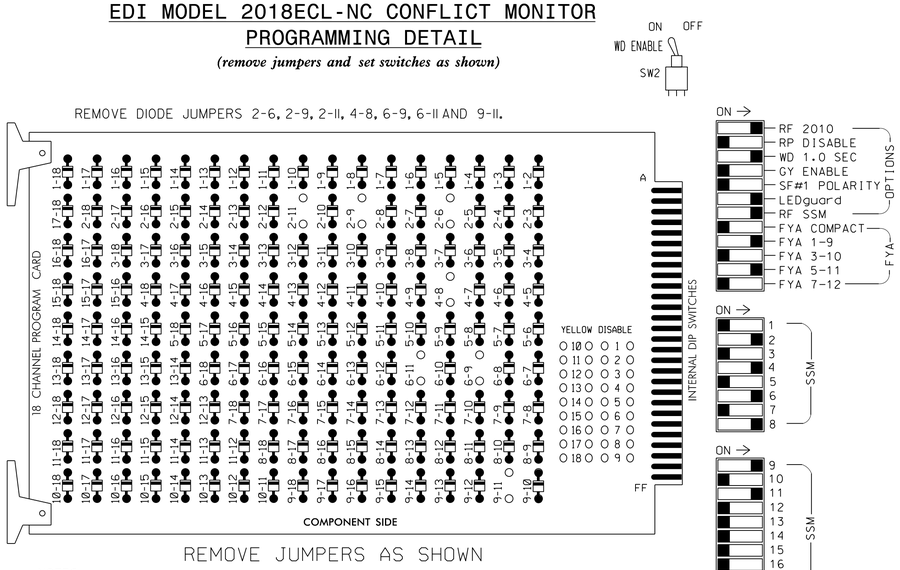

NOTES:

1. Card is provided with all diode jumpers in place. Removal of any jumper allows its channels to run concurrently.
2. Ensure jumpers SEL2-SEL5 and SEL9 are present on the monitor board.
3. Ensure that Red Enable is active at all times during normal operation.
4. Connect serial cable from conflict monitor to comm. port 1 of 2070 controller. Ensure conflict monitor communicates with 2070.

■ = DENOTES POSITION OF SWITCH

NOTES

1. To prevent "flash-conflict" problems, insert red flash program blocks for all unused vehicle load switches in the output file. The installer shall verify that signal heads flash in accordance with the Signal Plans.
2. Program phases 4 and 8 for Dual Entry.
3. Enable Simultaneous Gap-Out for all Phases.
4. Program phases 2 and 6 for Variable Initial and Gap Reduction.
5. Program phases 2 and 6 for Startup In Green.
6. Program phases 2 and 6 for Yellow Flash and overlap 1 as Wag Overlaps.
7. The cabinet and controller are part of the NC 42 (East of Clayton) Closed Loop System.

EQUIPMENT INFORMATION

CONTROLLER.....2070
CABINET.....332 W/ AUX
SOFTWARE.....ECONOLITE OASIS
CABINET MOUNT.....BASE
OUTPUT FILE POSITIONS...18 WITH AUX. OUTPUT FILE
LOAD SWITCHES USED.....S2,S5,S8,S11,AUX S1, AUX S4
PHASES USED.....2,4,6,8
OVERLAP "A".....2
OVERLAP "B".....NOT USED
OVERLAP "C".....6
OVERLAP "D".....NOT USED

SIGNAL HEAD HOOK-UP CHART

LOAD SWITCH NO.	S1	S2	S3	S4	S5	S6	S7	S8	S9	S10	S11	S12	AUX S1	AUX S2	AUX S3	AUX S4	AUX S5	AUX S6
CMU CHANNEL NO.	1	2	13	3	4	14	5	6	15	7	8	16	9	10	17	11	12	18
PHASE	1	2	2 PED	3	4	4 PED	5	6	6 PED	7	8	8 PED	OLA	OLB	SPARE	OLC	OLD	SPARE
SIGNAL HEAD NO.	NU	22,23	NU	NU	41,42, 43	NU	NU	62,63	NU	NU	81,82	NU	61★	NU	NU	21★	NU	NU
RED		128			101			134			107							
YELLOW		129			102			135			108							
GREEN		130			103			136			109							
RED ARROW													A121			A114		
YELLOW ARROW													A122			A115		
FLASHING YELLOW ARROW													A123			A116		
GREEN ARROW																		

NU = Not Used

★ See pictorial of head wiring in detail below.

INPUT FILE POSITION LAYOUT

(front view)

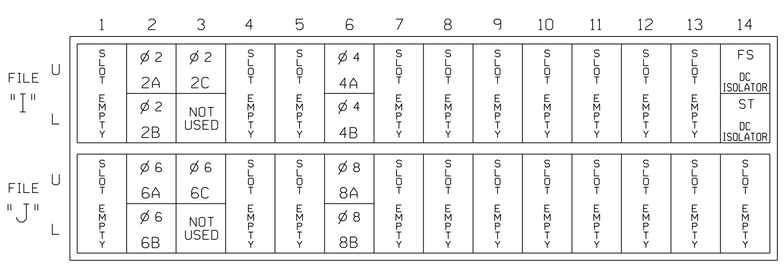

EX.: 1A, 2A, ETC. = LOOP NO.'S

FS = FLASH SENSE
ST = STOP TIME

INPUT FILE CONNECTION & PROGRAMMING CHART

LOOP NO.	LOOP TERMINAL	INPUT FILE POS.	PIN NO.	INPUT ASSIGNMENT NO.	DETECTOR NO.	NEMA PHASE	CALL	EXTEND	FULL TIME DELAY	STRETCH TIME	DELAY TIME
2A	TB2-5,6	I2U	39	1	2	2	Y	Y			
2B	TB2-7,8	I2L	43	5	12	2	Y	Y			
2C	TB2-9,10	I3U	63	25	32	2	Y	Y	Y		3
4A	TB4-9,10	I6U	41	3	4	4	Y	Y			
4B	TB4-11,12	I6L	45	7	14	4	Y	Y			15
6A	TB3-5,6	J2U	40	2	6	6	Y	Y			
6B	TB3-7,8	J2L	44	6	16	6	Y	Y			
6C	TB3-9,10	J3U	64	26	36	6	Y	Y	Y		3
8A	TB5-9,10	J6U	42	4	8	8	Y	Y			10
8B	TB5-11,12	J6L	46	8	18	8	Y	Y			15

INPUT FILE POSITION LEGEND: J2L
FILE J
SLOT 2
LOWER

OVERLAP PROGRAMMING DETAIL

(program controller as shown below)

FROM MAIN MENU PRESS '8' (OVERLAPS), THEN '1' (VEHICLE OVERLAP SETTINGS).

```
PAGE 1: VEHICLE OVERLAP 'A' SETTINGS
PHASE:            |123456789101112131415 16
VEH OVL PARENTS:  | X
VEH OVL NOT VEH:  |
VEH OVL NOT PED:  |
VEH OVL GRN EXT:  |
STARTUP COLOR:  _ RED  _ YELLOW  _ GREEN
FLASH COLORS:   _ RED  _ YELLOW  X GREEN
SELECT VEHICLE OVERLAP OPTIONS:   (Y/N)
FLASH YELLOW IN CONTROLLER FLASH?...Y
GREEN EXTENSION (0-255 SEC).........0
YELLOW CLEAR (0=PARENT,3-25.5 SEC)..0.0
RED CLEAR (0=PARENT,0.1-25.5 SEC)...0.0
OUTPUT AS PHASE # (0=NONE, 1-16)....0
```

← NOTICE GREEN FLASH

PRESS '+' TWICE

```
PAGE 1: VEHICLE OVERLAP 'C' SETTINGS
PHASE:            |123456789101112131415 16
VEH OVL PARENTS:  |     X
VEH OVL NOT VEH:  |
VEH OVL NOT PED:  |
VEH OVL GRN EXT:  |
STARTUP COLOR:  _ RED  _ YELLOW  _ GREEN
FLASH COLORS:   _ RED  _ YELLOW  X GREEN
SELECT VEHICLE OVERLAP OPTIONS:   (Y/N)
FLASH YELLOW IN CONTROLLER FLASH?...Y
GREEN EXTENSION (0-255 SEC).........0
YELLOW CLEAR (0=PARENT,3-25.5 SEC)..0.0
RED CLEAR (0=PARENT,0.1-25.5 SEC)...0.0
OUTPUT AS PHASE # (0=NONE, 1-16)....0
```

← NOTICE GREEN FLASH

OVERLAP PROGRAMMING COMPLETE

FYA SIGNAL WIRING DETAIL

(wire signal heads as shown)

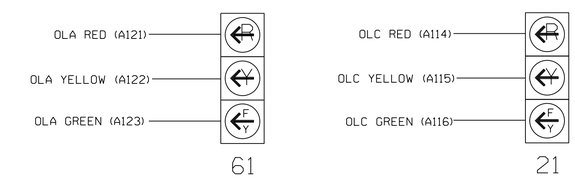

THIS ELECTRICAL DETAIL IS FOR
THE SIGNAL DESIGN: 04-1423
DESIGNED: January 2018
SEALED: 5/25/2018
REVISED: N/A

Final Design
Electrical Detail

DOCUMENT NOT CONSIDERED FINAL UNLESS ALL SIGNATURES COMPLETED

ELECTRICAL AND PROGRAMMING DETAILS FOR:

Prepared for the Offices of:
Traffic Engineering & Signal Management Unit, Transportation Mobility and Safety Division, NORTH CAROLINA DEPARTMENT OF TRANSPORTATION
750 N.Greenfield Pkwy,Garner,NC 27529

NC 42 at SR 1704 (Motorcycle Rd)/ Portofino Dr

Division 4 | Johnston County | Clayton

PLAN DATE: January 2018	REVIEWED BY: J O Deaton		
PREPARED BY: M W Yalch	REVIEWED BY:		
REVISIONS		INIT.	DATE

NORTH CAROLINA PROFESSIONAL SEAL 07438 ENGINEER JAMES O. DEATON

DocuSigned by: James O Deaton 40FFBAC430BD40F... 5/25/2018

SIG. INVENTORY NO. 04-1423

Prepared by
URS
URS Corporation – North Carolina
1600 Perimeter Park Drive
Morrisville, North Carolina 27560
TELEPHONE (919) 461-1100 FAX (919) 461-1415
NC LICENSE • C-2243

5/25/2018
L:\Morrisville\Jobs\R3825B\Traffic\Signals\Electricals\04-1423fe-00-192.dgn
coxst

DocuSign Envelope ID: EDEA80FB-80A3-45F4-B6C8-CD80310DC6C8

METAL POLE No. 1 and 2

PROJECT REFERENCE NO.	SHEET NO.
R-3825B	Sig.14.2

Design Loading for METAL POLE NO. 1

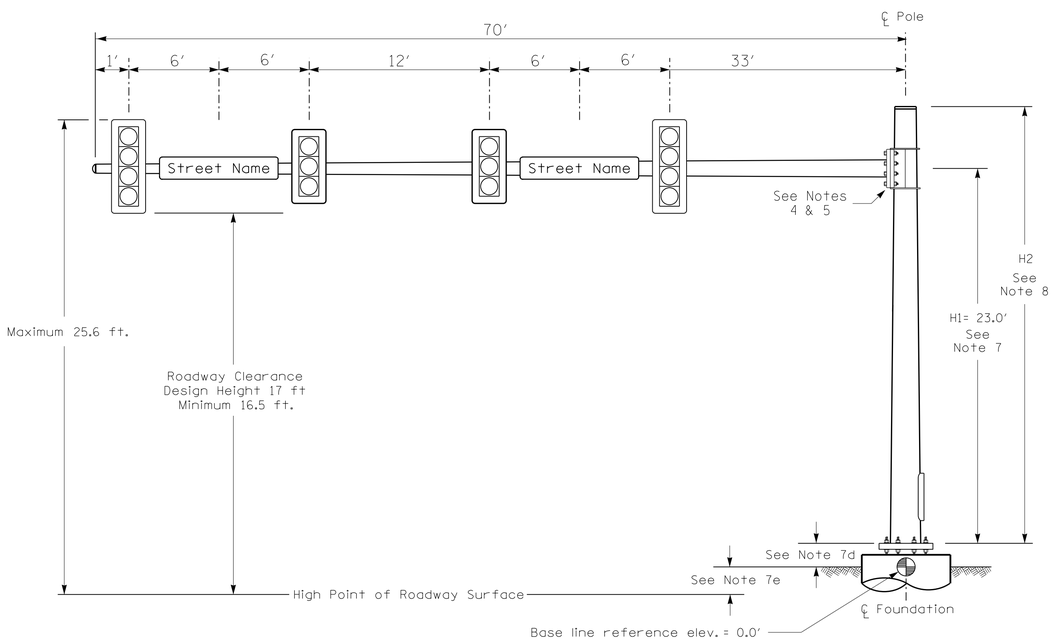

Elevation View

Design Loading for METAL POLE NO. 2

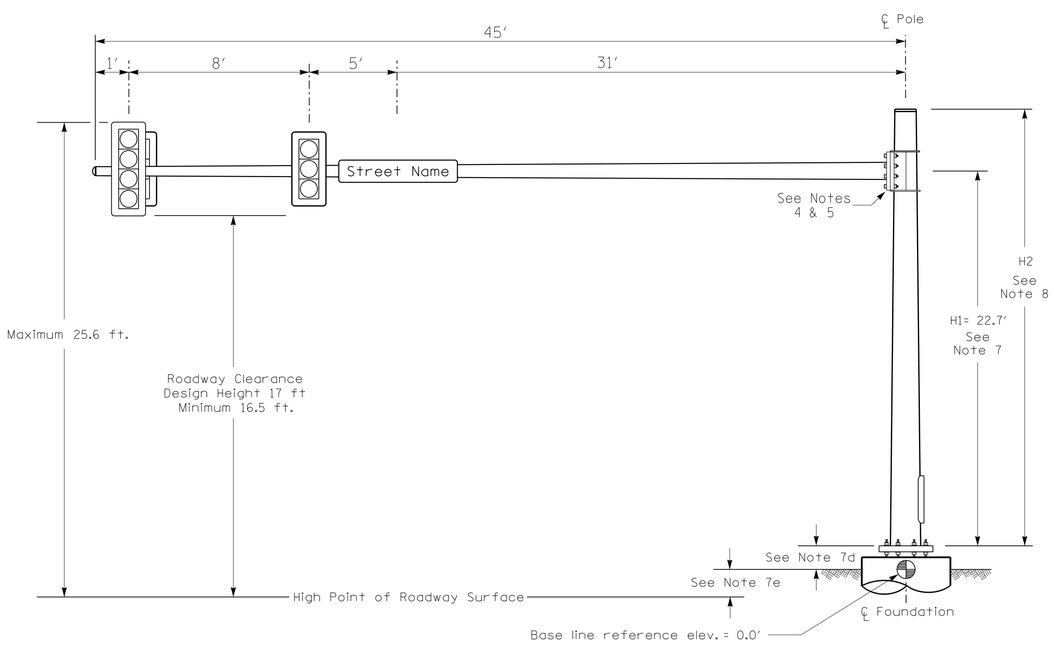

Elevation View

SPECIAL NOTE

The contractor is responsible for verifying that the mast arm attachment height (H1) will provide the "Design Height" clearance from the roadway before submitting final shop drawings for approval. Verify elevation data below which was obtained by field measurement or from available project survey data.

Elevation Data for Mast Arm Attachment (H1)

Elevation Differences for:	Pole 1	Pole 2
Baseline reference point at ℄ Foundation @ ground level	0.0 ft.	0.0 ft.
Elevation difference at High point of roadway surface	+3.9 ft.	+3.7 ft.
Elevation difference at Edge of travelway or face of curb	+2.7 ft.	+3.7 ft.

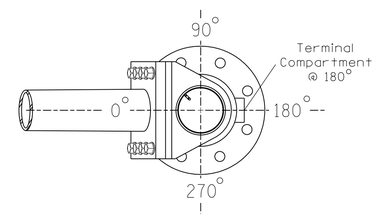

POLE RADIAL ORIENTATION

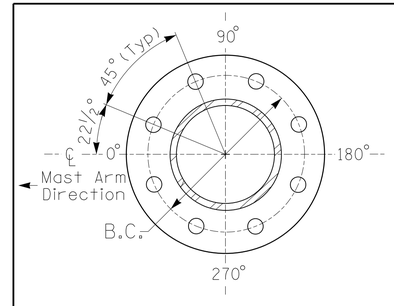

8 BOLT BASE PLATE DETAIL

See Note 6

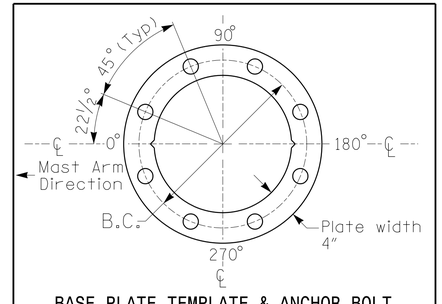

BASE PLATE TEMPLATE & ANCHOR BOLT LOCK PLATE DETAIL

For 8 Bolt Base Plate

MAST ARM LOADING SCHEDULE

LOADING SYMBOL	DESCRIPTION	AREA	SIZE	WEIGHT
	RIGID MOUNTED SIGNAL HEAD 12″-4 SECTION-WITH BACKPLATE	11.5 S.F.	25.5″ W X 66.0″ L	74 LBS
	RIGID MOUNTED SIGNAL HEAD 12″-3 SECTION-WITH BACKPLATE	9.3 S.F.	25.5″ W X 52.5″ L	60 LBS
	RIGID MOUNTED SIGNAL HEAD 12″-5 SECTION-WITH BACKPLATE	16.3 S.F.	42.0″ W X 56.0″ L	103 LBS
Street Name	STREET NAME SIGN RIGID MOUNTED	16.0 S.F.	24.0″ W X 96.0″ L	36 LBS

NOTES

DESIGN REFERENCE MATERIAL

1. Design the traffic signal structure and foundation in accordance with:
   - The 6th Edition 2013 AASHTO "Standard Specifications for Structural Supports for Highway Signs, Luminaires, and Traffic Signals, including all of the latest interim revisions.
   - The 2018 NCDOT "Standard Specifications for Roads and Structures." The latest addenda to the specifications can be found in the traffic signal project special provisions.
   - The 2018 NCDOT Roadway Standard Drawings.
   - The traffic signal project plans and special provisions.
   - The NCDOT "Metal Pole Standards" located at the following NCDOT website: https://connect.ncdot.gov/resources/safety/Pages/ITS-Design-Resources.aspx

DESIGN REQUIREMENTS

2. Design the traffic signal structure using the loading conditions shown in the elevation views. These are anticipated worst case "design loads" and may not represent the actual loads that will be applied at the time of the installation. The contractor should refer to the traffic signal plans for the actual loads that will be applied at the time of the installation.
3. Design all signal supports using stress ratios that do not exceed 0.9.
4. The camber design for the mast arm deflection should provide an appearance of a low pitched arch where the tip or the free end of the mast arm does not deflect below horizontal when fully loaded.
5. A clamp-type bolted mast arm-to-pole connection may be used instead of the welded ring stiffened box connection shown as long as the connection meets all of the design requirements.
6. Design base plate with 8 anchor bolt holes. Provide 2 inch x 60 inch anchor bolts.
7. The mast arm attachment height (H1) shown is based on the following design assumptions:
   a. Mast arm slope and deflection are not considered in determining the arm attachment height as they are assumed to offset each other.
   b. Signal heads are rigidly mounted and vertically centered on the mast arm.
   c. The roadway clearance height for design is as shown in the elevation views.
   d. The top of the pole base plate is 0.75 feet above the ground elevation.
   e. Refer to the Elevation Data Chart for the elevation differences between the proposed foundation ground level and the high point of the roadway.
8. The pole manufacturer will determine the total height (H2) of each pole using the greater of the following:
   - Mast arm attachment height (H1) plus 2 feet, or
   - H1 plus 1/2 of the total height of the mast arm attachment assembly plus 1 foot.
9. If pole location adjustments are required, the contractor must gain approval from the Engineer as this may affect the mast arm lengths and arm attachment heights. The contractor may contact the Signal Design Section Senior Structural Engineer for assistance at (919) 814-5000.
10. The contractor is responsible for verifying that the mast arm length shown will allow proper positioning of the signal heads over the roadway.
11. The contractor is responsible for providing soil penetration testing data (SPT) to the pole manufacturer so site specific foundations can be designed.

All metal poles and arms should be black in color as specified in the project special provisions.

Prepared by
URS
URS Corporation – North Carolina
1600 Perimeter Park Drive
Morrisville, North Carolina 27560
TELEPHONE (919) 461-1100 FAX (919) 461-1415
NC LICENSE • C-3243

NCDOT Wind Zone 3 (110 mph)

DOCUMENT NOT CONSIDERED FINAL UNLESS ALL SIGNATURES COMPLETED

Prepared for the Offices of:
Transportation Mobility and Safety Division
STATE OF NORTH CAROLINA DEPARTMENT OF TRANSPORTATION
Signal Design Section
750 N.Greenfield Pkwy,Garner,NC 27529

NC 42
at
SR 1704 (Motorcycle Rd)/
Portofino Dr

Division 4 Johnston County Clayton

PLAN DATE:	January 2018	REVIEWED BY:	C. L. Kalencik
PREPARED BY:	S. W. Cox	REVIEWED BY:	

SCALE 0 N/A N/A

REVISIONS	INIT.	DATE

NORTH CAROLINA PROFESSIONAL SEAL 040715 ENGINEER COURTNEY L. KALENCIK

DocuSigned by: Courtney L. Kalencik 5/25/2018
0FE9158CE2964FE...

SIG. INVENTORY NO. 04-1423

5/25/2018
L:\Workfiles\Jobs\R3825B\Traffic\Signals\041423_date_mlb2.dgn
COXSI

DocuSign Envelope ID: EDEA80FB-80A3-45F4-B6C8-CD80310DC6C8

METAL POLE No. 3 and 4

PROJECT REFERENCE NO.	SHEET NO.
R-3825B	Sig.14.3

Design Loading for METAL POLE NO. 3

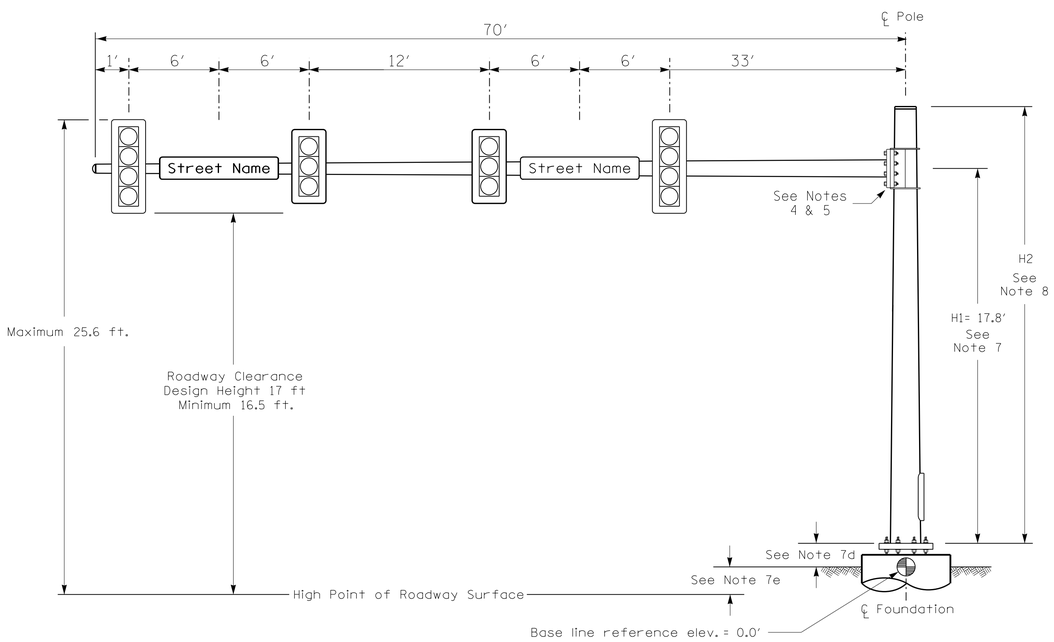

Elevation View

Design Loading for METAL POLE NO. 4

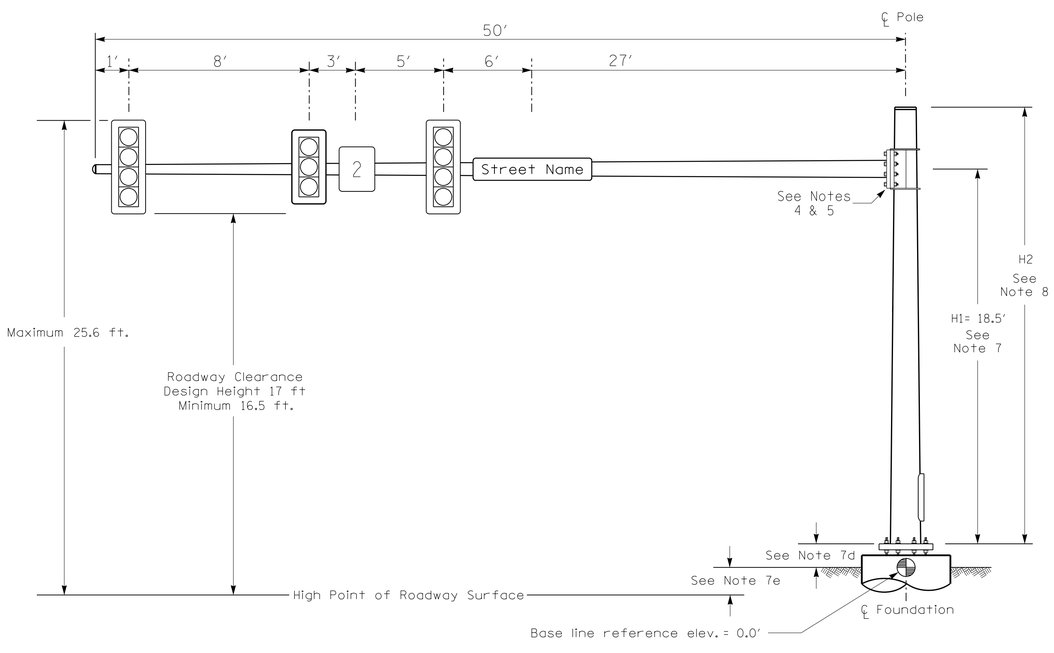

Elevation View

SPECIAL NOTE

The contractor is responsible for verifying that the mast arm attachment height (H1) will provide the "Design Height" clearance from the roadway before submitting final shop drawings for approval. Verify elevation data below which was obtained by field measurement or from available project survey data.

Elevation Data for Mast Arm Attachment (H1)

Elevation Differences for:	Pole 3	Pole 4
Baseline reference point at ℄ Foundation @ ground level	0.0 ft.	0.0 ft.
Elevation difference at High point of roadway surface	-1.2 ft.	-0.6 ft.
Elevation difference at Edge of travelway or face of curb	-2.5 ft.	-1.4 ft.

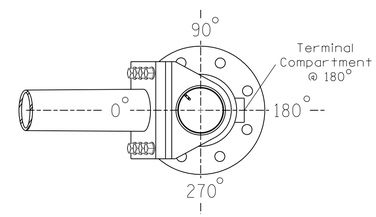

POLE RADIAL ORIENTATION

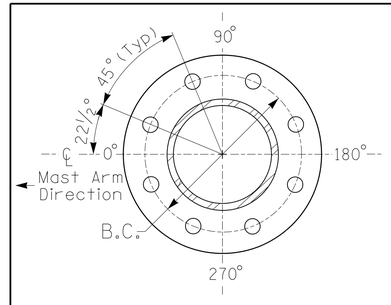

8 BOLT BASE PLATE DETAIL

See Note 6

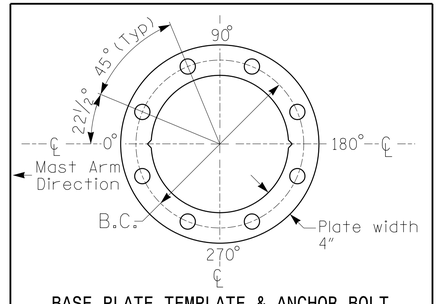

BASE PLATE TEMPLATE & ANCHOR BOLT LOCK PLATE DETAIL

For 8 Bolt Base Plate

MAST ARM LOADING SCHEDULE

LOADING SYMBOL	DESCRIPTION	AREA	SIZE	WEIGHT
	RIGID MOUNTED SIGNAL HEAD 12″-4 SECTION-WITH BACKPLATE	11.5 S.F.	25.5″ W X 66.0″ L	74 LBS
	RIGID MOUNTED SIGNAL HEAD 12″-3 SECTION-WITH BACKPLATE	9.3 S.F.	25.5″ W X 52.5″ L	60 LBS
	RIGID MOUNTED SIGNAL HEAD 12″-5 SECTION-WITH BACKPLATE	16.3 S.F.	42.0″ W X 56.0″ L	103 LBS
2	SIGN RIGID MOUNTED	7.5 S.F.	30.0″ W X 36.0″ L	14 LBS
Street Name	STREET NAME SIGN RIGID MOUNTED	16.0 S.F.	24.0″ W X 96.0″ L	36 LBS

NOTES

DESIGN REFERENCE MATERIAL

1. Design the traffic signal structure and foundation in accordance with:
   - The 6th Edition 2013 AASHTO "Standard Specifications for Structural Supports for Highway Signs, Luminaires, and Traffic Signals, including all of the latest interim revisions.
   - The 2018 NCDOT "Standard Specifications for Roads and Structures." The latest addenda to the specifications can be found in the traffic signal project special provisions.
   - The 2018 NCDOT Roadway Standard Drawings.
   - The traffic signal project plans and special provisions.
   - The NCDOT "Metal Pole Standards" located at the following NCDOT website: https://connect.ncdot.gov/resources/safety/Pages/ITS-Design-Resources.aspx

DESIGN REQUIREMENTS

2. Design the traffic signal structure using the loading conditions shown in the elevation views. These are anticipated worst case "design loads" and may not represent the actual loads that will be applied at the time of the installation. The contractor should refer to the traffic signal plans for the actual loads that will be applied at the time of the installation.
3. Design all signal supports using stress ratios that do not exceed 0.9.
4. The camber design for the mast arm deflection should provide an appearance of a low pitched arch where the tip or the free end of the mast arm does not deflect below horizontal when fully loaded.
5. A clamp-type bolted mast arm-to-pole connection may be used instead of the welded ring stiffened box connection shown as long as the connection meets all of the design requirements.
6. Design base plate with 8 anchor bolt holes. Provide 2 inch x 60 inch anchor bolts.
7. The mast arm attachment height (H1) shown is based on the following design assumptions:
   a. Mast arm slope and deflection are not considered in determining the arm attachment height as they are assumed to offset each other.
   b. Signal heads are rigidly mounted and vertically centered on the mast arm.
   c. The roadway clearance height for design is as shown in the elevation views.
   d. The top of the pole base plate is 0.75 feet above the ground elevation.
   e. Refer to the Elevation Data Chart for the elevation differences between the proposed foundation ground level and the high point of the roadway.
8. The pole manufacturer will determine the total height (H2) of each pole using the greater of the following:
   - Mast arm attachment height (H1) plus 2 feet, or
   - H1 plus 1/2 of the total height of the mast arm attachment assembly plus 1 foot.
9. If pole location adjustments are required, the contractor must gain approval from the Engineer as this may affect the mast arm lengths and arm attachment heights. The contractor may contact the Signal Design Section Senior Structural Engineer for assistance at (919) 814-5000.
10. The contractor is responsible for verifying that the mast arm length shown will allow proper positioning of the signal heads over the roadway.
11. The contractor is responsible for providing soil penetration testing data (SPT) to the pole manufacturer so site specific foundations can be designed.

All metal poles and arms should be black in color as specified in the project special provisions.

Prepared by
URS
URS Corporation – North Carolina
1600 Perimeter Park Drive
Morrisville, North Carolina 27560
TELEPHONE (919) 461-1100 FAX (919) 461-1415
NC LICENSE • C-2243

NCDOT Wind Zone 3 (110 mph)

DOCUMENT NOT CONSIDERED FINAL UNLESS ALL SIGNATURES COMPLETED

Prepared for the Offices of:
Transportation Mobility and Safety Division
STATE OF NORTH CAROLINA DEPARTMENT OF TRANSPORTATION
Signal Design Section
750 N.Greenfield Pkwy,Garner,NC 27529

NC 42
at
SR 1704 (Motorcycle Rd)/
Portofino Dr

Division 4 Johnston County Clayton

PLAN DATE: January 2018 REVIEWED BY: C. L. Kalencik
PREPARED BY: S. W. Cox REVIEWED BY:

SCALE
0 N/A
N/A

REVISIONS	INIT.	DATE

NORTH CAROLINA PROFESSIONAL SEAL 040715 ENGINEER COURTNEY L. KALENCIK

DocuSigned by: Courtney L. Kalencik 5/25/2018
0FE9158CE2864FE...

SIG. INVENTORY NO. 04-1423

5/25/2018
L:\Waterfall\Live\Jobs\R3825B\Traffic\Signals\041423_date_n38m4.dgn
coxsi

DocuSign Envelope ID: EDEA80FB-80A3-45F4-B6C8-CD80310DC6C8

PROJECT REFERENCE NO.	SHEET NO.
R-3825B	Sig.15.0

PHASING DIAGRAM

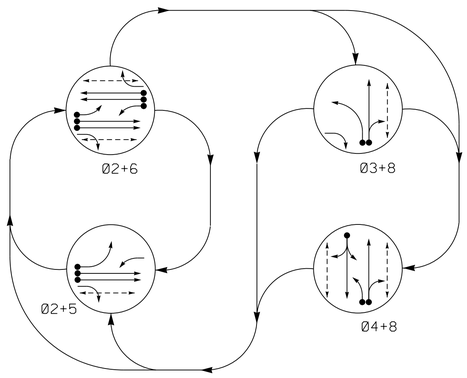

PHASING DIAGRAM DETECTION LEGEND

- DETECTED MOVEMENT
- UNDETECTED MOVEMENT (OVERLAP)
- UNSIGNALIZED MOVEMENT
- PEDESTRIAN MOVEMENT

TABLE OF OPERATION

SIGNAL FACE	PHASE 02+5	02+6	03+8	04+8	FLASH
21	G	G	R	R	Y
22	G	G	R/→	R	Y
31	←R	←R	←	F Y	←R
41,42	R	R	R	G	R
51	←	F Y	←R	←R	←Y
61	F Y	F Y	←R	←R	←Y
62,63	R	G	R	R	Y
81,82	R	R	G	G	R
P21,P22	W	W	DW	DW	DRK
P41,P42	DW	DW	DW	W	DRK
P61,P62	DW	W	DW	DW	DRK
P81,P82	DW	DW	W	W	DRK

SIGNAL FACE I.D.

All Heads L.E.D.

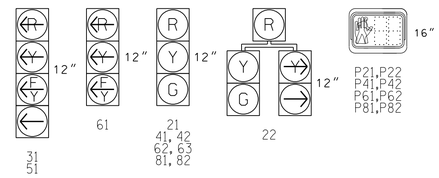

OASIS 2070 LOOP & DETECTOR INSTALLATION CHART

INDUCTIVE LOOPS					DETECTOR PROGRAMMING							
LOOP	SIZE (FT)	DISTANCE FROM STOPBAR (FT)	TURNS	NEW LOOP	PHASE	CALLING	EXTENSION	FULL TIME DELAY	STRETCH TIME	DELAY TIME	SYSTEM LOOP	NEW CARD
2A	6X6	300	5	Y	2	Y	Y	-	-	-	-	Y
2B	6X6	300	5	Y	2	Y	Y	-	-	-	-	Y
3A	6X40	0	2-4-2	Y	3	Y	Y	-	-	15	-	Y
					8	Y	Y	-	-	-	-	Y
4A	6X40	0	2-4-2	Y	4	Y	Y	-	-	10	-	Y
5A	6X40	0	2-4-2	Y	5	Y	Y	-	-	15	-	Y
					2	Y	Y	Y	-	3	-	Y
6A	6X6	300	5	Y	6	Y	Y	-	-	-	-	Y
6B	6X6	300	5	Y	6	Y	Y	-	-	-	-	Y
8A	6X40	0	2-4-2	Y	8	Y	Y	-	-	10	-	Y

4 Phase
Fully Actuated
NC 42 (East of Clayton)

NOTES

1. Refer to "Roadway Standard Drawings NCDOT" dated January 2018. "Standard Specifications for Roads and Structures" dated January 2018.
2. Do not program signal for late night flashing operation unless otherwise directed by the Engineer.
3. Omit phase 3 during phase 4 on.
4. Phase 5 may be lagged.
5. Set all detector units to presence mode.
6. Locate new cabinet so as not to obstruct sight distance of vehicles turning right on red.
7. Omit "WALK" and flashing "DON'T WALK" with no pedestrian calls.
8. Program pedestrian heads to countdown the flashing "Don't Walk" time only.
9. Maximum times shown in timing chart are for free-run operation only. Coordinated signal system timing values supersede these values.
10. Closed loop system data: Controller Asset #1432.
11. All metal poles and arms should be black in color as specified in the project special provisions.

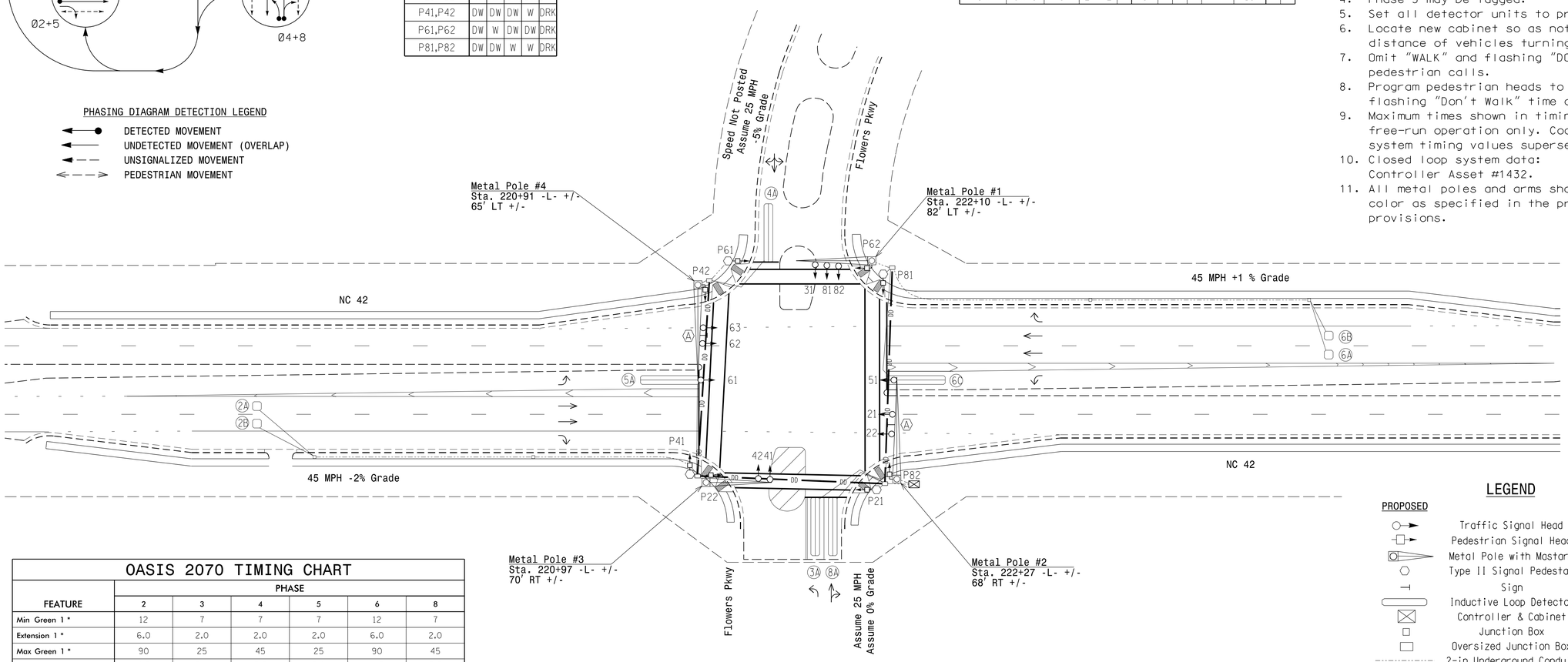

LEGEND

PROPOSED		EXISTING
	Traffic Signal Head	
	Pedestrian Signal Head	
	Metal Pole with Mastarm	
	Type II Signal Pedestal	
	Sign	
	Inductive Loop Detector	
	Controller & Cabinet	
	Junction Box	
	Oversized Junction Box	
	2-in Underground Conduit	
DD	Directional Drill	N/A
N/A	Right of Way	
	Directional Arrow	
A	Street Name Sign (D3-1)	A

OASIS 2070 TIMING CHART

FEATURE	PHASE 2	3	4	5	6	8
Min Green 1 *	12	7	7	7	12	7
Extension 1 *	6.0	2.0	2.0	2.0	6.0	2.0
Max Green 1 *	90	25	45	25	90	45
Yellow Clearance	4.7	3.0	3.5	3.0	4.7	3.5
Red Clearance	2.1	3.7	3.6	3.5	2.1	3.6
Red Revert	2.0	2.0	2.0	2.0	2.0	2.0
Walk 1 *	7	-	7	-	7	7
Don't Walk 1	20	-	30	-	20	32
Seconds Per Actuation *	1.8	-	-	-	1.8	-
Max Variable Initial *	34	-	-	-	34	-
Time Before Reduction *	15	-	-	-	15	-
Time To Reduce *	30	-	-	-	30	-
Minimum Gap	3.0	-	-	-	3.0	-
Recall Mode	MIN RECALL	-	-	-	MIN RECALL	-
Vehicle Call Memory	YELLOW	-	-	-	YELLOW	-
Dual Entry	-	-	ON	-	-	ON
Simultaneous Gap	ON	ON	ON	ON	ON	ON

* These values may be field adjusted. Do not adjust Min Green and Extension times for phases 2 and 6 lower than what is shown. Min Green for all other phases should not be lower than 4 seconds.

New Installation

DOCUMENT NOT CONSIDERED FINAL UNLESS ALL SIGNATURES COMPLETED

Prepared by
URS
URS Corporation – North Carolina
1600 Perimeter Park Drive
Morrisville, North Carolina 27560
TELEPHONE (919) 461-1100 FAX (919) 461-1415
NC LICENSE # C-2243

Prepared for the Offices of:
Transportation Mobility and Safety Division
STATE OF NORTH CAROLINA DEPARTMENT OF TRANSPORTATION
Signal Design Section
750 N.Greenfield Pkwy,Garner,NC 27529

SCALE 0 40 1"=40'

NC 42 at Flowers Parkway

Division 4 Johnston County Clayton

PLAN DATE: January 2018 REVIEWED BY: C. L. Kalencik
PREPARED BY: S. W. Cox REVIEWED BY:

REVISIONS	INIT.	DATE

NORTH CAROLINA PROFESSIONAL SEAL 040715 ENGINEER CORTNEY L. KALENCIK

DocuSigned by: Cortney L. Kalencik 0FE9158CE2864FE... 5/25/2018

SIG. INVENTORY NO. 04-1432

5/25/2018
L:\Waterville\Jobs\R3825B\Traffic\Signals\041432_sig_dsn_date.dgn
coxsi

DocuSign Envelope ID: EDEA80FB-80A3-45F4-B6C8-CD80310DC6C8

PROJECT REFERENCE NO.	SHEET NO.
R-3825B	Sig. 15.1

EDI MODEL 2018ECL-NC CONFLICT MONITOR PROGRAMMING DETAIL

(remove jumpers and set switches as shown)

REMOVE DIODE JUMPERS 2-5, 2-6, 2-9, 2-11, 2-13, 2-15, 3-8, 3-10, 3-16, 4-8, 4-10, 4-14, 4-16, 5-9, 5-11, 5-13, 6-9, 6-11, 6-13, 6-15, 8-10, 8-14, 8-16, 9-11, 9-13, 9-15, 10-14, 10-16, 11-13, 11-15, 13-15 AND 14-16.

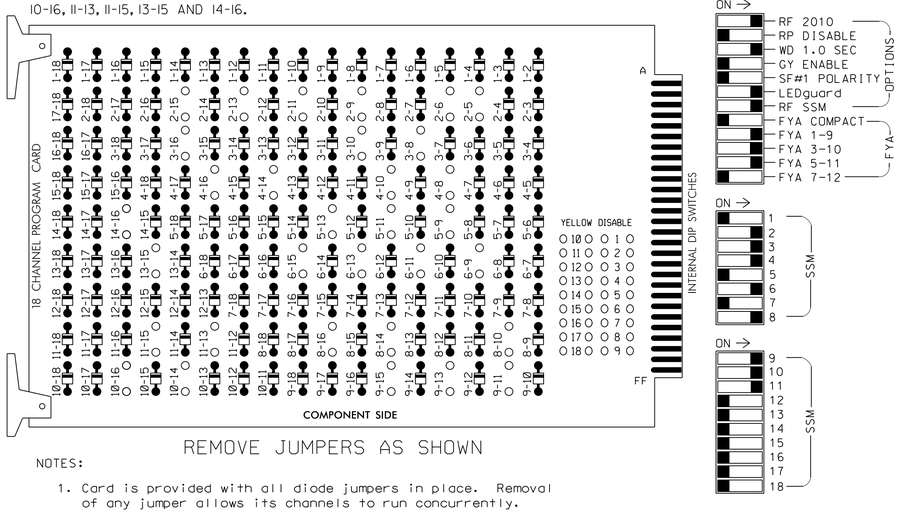

REMOVE JUMPERS AS SHOWN

NOTES:

1. Card is provided with all diode jumpers in place. Removal of any jumper allows its channels to run concurrently.
2. Ensure jumpers SEL2-SEL5 and SEL9 are present on the monitor board.
3. Ensure that Red Enable is active at all times during normal operation.
4. Connect serial cable from conflict monitor to comm. port 1 of 2070 controller. Ensure conflict monitor communicates with 2070.

NOTES

1. To prevent "flash-conflict" problems, insert red flash program blocks for all unused vehicle load switches in the output file. The installer shall verify that signal heads flash in accordance with the Signal Plans.
2. Program phases 4 and 8 for Dual Entry.
3. Enable Simultaneous Gap-Out for all Phases.
4. Program phases 2 and 6 for Variable Initial and Gap Reduction.
5. Program phases 2 and 6 for Startup In Green.
6. Program phases 2, 4, 6, and 8 for Startup Ped Call.
7. Program phases 2 and 6 for Yellow Flash, and overlaps 1 and 2 as Wag Overlaps.
8. The cabinet and controller are part of the NC 42 (East of Clayton) Closed Loop System.

EQUIPMENT INFORMATION

CONTROLLER.....2070
CABINET.....332 W/ AUX
SOFTWARE.....ECONOLITE OASIS
CABINET MOUNT.....BASE
OUTPUT FILE POSITIONS...18 WITH AUX. OUTPUT FILE
LOAD SWITCHES USED.....S2,S3,S4,S5,S6,S7,S8,S9,S11, S12,AUX S1,AUX S2,AUX S4
PHASES USED.....2,3,4,5,6,8,2PED,4PED,6PED, 8PED
OVERLAP "A".....2
OVERLAP "B".....3+4
OVERLAP "C".....5+6
OVERLAP "D".....NONE

SIGNAL HEAD HOOK-UP CHART

LOAD SWITCH NO.	S1	S2	S3	S4		S5	S6	S7	S8	S9	S10	S11	S12	AUX S1	AUX S2	AUX S3	AUX S4	AUX S5	AUX S6
CMU CHANNEL NO.	1	2	13	3		4	14	5	6	15	7	8	16	9	10	17	11	12	18
PHASE	1	2	2 PED	3		4	4 PED	5	6	6 PED	7	8	8 PED	OLA	OLB	SPARE	OLC	OLD	SPARE
SIGNAL HEAD NO.	NU	21.22	P21, P22	22	31★	41.42	P41, P42	51★	62.63	P61, P62	NU	81.82	P81, P82	61★	31★	NU	51★	NU	NU
RED		128			✳	101			134			107							
YELLOW		129				102		✳	135			108							
GREEN		130				103			136			109							
RED ARROW														A121	A124		A114		
YELLOW ARROW				117										A122	A125		A115		
FLASHING YELLOW ARROW														A123	A126		A116		
GREEN ARROW				118	118			133											
✋			113				104			119			110						
🚶			115				106			121			112						

NU = Not Used

✳ Denotes install load resistor. See load resistor installation detail this sheet.

★ See pictorial of head wiring in detail below.

FYA SIGNAL WIRING DETAIL

(wire signal heads as shown)

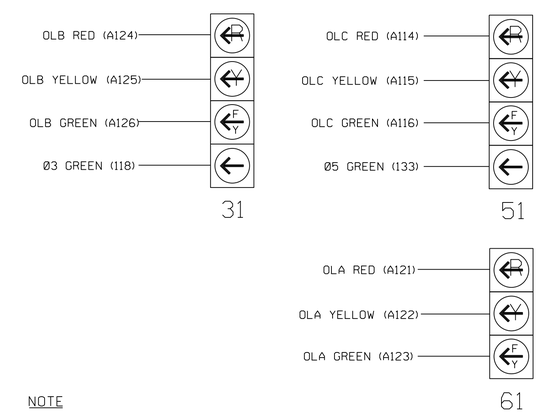

NOTE

The sequence display for signal head 31 and 51 requires special logic programming. See sheet 2 for programming instructions.

INPUT FILE POSITION LAYOUT

(front view)

		1	2	3	4	5	6	7	8	9	10	11	12	13	14
FILE "I"	U	SLOT EMPTY	Ø2 2A	SLOT EMPTY	WIRED INPUT ⊗	Ø3 3A	Ø4 4A	SLOT EMPTY	SLOT EMPTY	SLOT EMPTY	SLOT EMPTY	SLOT EMPTY	Ø2 PED DC ISOLATOR	Ø6 PED DC ISOLATOR	FS DC ISOLATOR
	L		Ø2 2B			NOT USED	NOT USED						Ø4 PED DC ISOLATOR	Ø8 PED DC ISOLATOR	ST DC ISOLATOR
FILE "J"	U	Ø5 5A	Ø6 6A	SLOT EMPTY	SLOT EMPTY	SLOT EMPTY	Ø8 8A	SLOT EMPTY	WIRED INPUT ⊗	SLOT EMPTY	SLOT EMPTY	SLOT EMPTY	SLOT EMPTY	SLOT EMPTY	SLOT EMPTY
	L	NOT USED	Ø6 6B				NOT USED								

EX.: 1A, 2A, ETC. = LOOP NO.'S

FS = FLASH SENSE
ST = STOP TIME

⊗ Wired Input - Do not populate slot with detector card

INPUT FILE POSITION LEGEND: J2L
FILE J
SLOT 2
LOWER

INPUT FILE CONNECTION & PROGRAMMING CHART

LOOP NO.	LOOP TERMINAL	INPUT FILE POS.	PIN NO.	INPUT ASSIGNMENT NO.	DETECTOR NO.	NEMA PHASE	CALL	EXTEND	FULL TIME DELAY	STRETCH TIME	DELAY TIME
2A	TB2-5,6	I2U	39	1	2	2	Y	Y			
2B	TB2-7,8	I2L	43	5	12	2	Y	Y			
3A[1]	TB4-5,6	I5U	58	20	3	3	Y	Y			15
	-	J8U	50	12	28	8	Y	Y			
4A	TB4-9,10	I6U	41	3	4	4	Y	Y			10
5A[2]	TB3-1,2	J1U	55	17	5	5	Y	Y			15
	-	I4U	47	9	22	2	Y	Y	Y		3
6A	TB3-5,6	J2U	40	2	6	6	Y	Y			
6B	TB3-7,8	J2L	44	6	16	6	Y	Y			
8A	TB5-9,10	J6U	42	4	8	8	Y	Y			10
PED PUSH BUTTONS											
P21,P22	TB8-4,6	I12U	67	29	PED 2	2 PED					
P41,P42	TB8-5,6	I12L	69	31	PED 4	4 PED					
P61,P62	TB8-7,9	I13U	68	30	PED 6	6 PED					
P81,P82	TB8-8,9	I13L	70	32	PED 8	8 PED					

NOTE:
INSTALL DC ISOLATORS IN INPUT FILE SLOTS I12 AND I13.

[1] Add jumper from I5-W to J8-W, on rear of input file.
[2] Add jumper from J1-W to I4-W, on rear of input file.

LOAD RESISTOR INSTALLATION DETAIL

(install resistors as shown below)

ACCEPTABLE VALUES	
VALUE (ohms)	WATTAGE
1.5K - 1.9K	25W (min)
2.0K - 3.0K	10W (min)

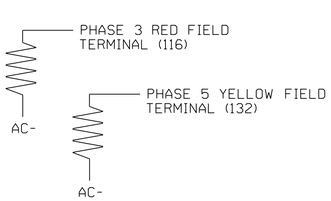

COUNTDOWN PEDESTRIAN SIGNAL OPERATION

Countdown Ped Signals are required to display timing only during Ped Clearance Interval. Consult Ped Signal Module user's manual for instructions on selecting this feature.

Prepared by
URS
URS Corporation – North Carolina
1600 Perimeter Park Drive
Morrisville, North Carolina 27560
TELEPHONE (919) 461-1100 FAX (919) 461-1415
NC LICENSE • C-2243

THIS ELECTRICAL DETAIL IS FOR
THE SIGNAL DESIGN: 04-1432
DESIGNED: January 2018
SEALED: 5/25/2018
REVISED: N/A

Electrical Detail - Sheet 1 of 2

DOCUMENT NOT CONSIDERED FINAL UNLESS ALL SIGNATURES COMPLETED

ELECTRICAL AND PROGRAMMING DETAILS FOR:

Prepared for the Offices of:
Traffic Engineering Branch, Mobility and Safety Division, Department of Transportation, State of North Carolina
750 N.Greenfield Pkwy,Garner,NC 27529

NC 42
at
Flowers Parkway

Division 4 Johnston County Clayton

PLAN DATE:	January 2018	REVIEWED BY:	J O Deaton
PREPARED BY:	M W Yalch	REVIEWED BY:	

REVISIONS	INIT.	DATE

NORTH CAROLINA PROFESSIONAL SEAL 07438 ENGINEER JAMES O. DEATON

DocuSigned by: James O Deaton 5/25/2018
40FFBAC4308D40F...

SIG. INVENTORY NO. 04-1432

5/25/2018
L:\Morrisville\Jobs\R3825B\Traffic\Signals\Electricals\04-1432e-00-192.dgn
coxsl

DocuSign Envelope ID: EDEA80FB-80A3-45F4-B6C8-CD80310DC6C8

PROJECT REFERENCE NO.	SHEET NO.
R-3825B	Sig. 15.2

LOGICAL I/O PROCESSOR PROGRAMMING DETAIL
TO PRODUCE SPECIAL FYA-PPLT SIGNAL SEQUENCE

(program controller as shown below)

1. FROM MAIN MENU PRESS '2' (PHASE CONTROL), THEN '1' (PHASE CONTROL FUNCTIONS). SCROLL TO THE BOTTOM OF THE MENU AND ENABLE ACT LOGIC COMMANDS 1, 2, 3, 4, 5 AND 6.
2. FROM MAIN MENU PRESS '6' (OUTPUTS), THEN '3' (LOGICAL I/O PROCESSOR).

```
LOGICAL I/O COMMAND #1  (+/-COMMAND#)
IF  ACTIVE PHASE        #3  IS ON
AND RED CLEAR ON PHASE #3  IS ON

SCROLL DOWN

THEN:
SET OUTPUT  ASSIGNMENT #47 ON
SET OUTPUT  ASSIGNMENT #48 OFF
```

NOTE: LOGIC FOR PHASE 3 RED CLEAR WHEN TRANSITIONING FROM PHASE 3 TO PHASE 4 (HEAD 31).

PRESS '+'

```
LOGICAL I/O COMMAND #2  (+/-COMMAND#)
IF  ACTIVE PHASE        #3  IS ON

SCROLL DOWN

THEN:
SET OUTPUT  ASSIGNMENT #49 OFF
```

NOTE: LOGIC FOR SWITCHING FLASHING YELLOW ARROW "OFF" DURING PHASE 3 (HEAD 31).

PRESS '+'

```
LOGICAL I/O COMMAND #3  (+/-COMMAND#)
IF  YELLOW ON PHASE     #3  IS ON

SCROLL DOWN

THEN:
SET OUTPUT  ASSIGNMENT #48 ON
```

NOTE: LOGIC FOR YELLOW ARROW CLEARANCE FROM PHASE 3 (HEAD 31).

PRESS '+'

```
LOGICAL I/O COMMAND #4  (+/-COMMAND#)
IF  ACTIVE PHASE        #5  IS ON
AND RED CLEAR ON PHASE #5  IS ON

SCROLL DOWN

THEN:
SET OUTPUT  ASSIGNMENT #42 ON
SET OUTPUT  ASSIGNMENT #43 OFF
```

NOTE: LOGIC FOR PHASE 5 RED CLEAR WHEN TRANSITIONING FROM PHASE 5 TO PHASE 6 (HEAD 51).

PRESS '+'

```
LOGICAL I/O COMMAND #5  (+/-COMMAND#)
IF  ACTIVE PHASE        #5  IS ON

SCROLL DOWN

THEN:
SET OUTPUT  ASSIGNMENT #44 OFF
```

NOTE: LOGIC FOR SWITCHING FLASHING YELLOW ARROW "OFF" DURING PHASE 5 (HEAD 51).

PRESS '+'

```
LOGICAL I/O COMMAND #6  (+/-COMMAND#)
IF  YELLOW ON PHASE     #5  IS ON

SCROLL DOWN

THEN:
SET OUTPUT  ASSIGNMENT #43 ON
```

NOTE: LOGIC FOR YELLOW ARROW CLEARANCE FROM PHASE 5 (HEAD 51).

LOGIC I/O PROCESSOR PROGRAMMING COMPLETE

OUTPUT REFERENCE SCHEDULE

USE TO INTERPRET LOGIC PROCESSOR

OUTPUT 42 = Overlap C Red
OUTPUT 43 = Overlap C Yellow
OUTPUT 44 = Overlap C Green
OUTPUT 47 = Overlap B Red
OUTPUT 48 = Overlap B Yellow
OUTPUT 49 = Overlap B Green

DYNAMIC BACK-UP CONTROL PROGRAMMING

(program controller as shown below)

1. From Main Menu press '2' (Phase Control), then '1' (Phase Control Functions). Scroll to the bottom of the menu and enable Dynamic/Backup Control Function 1.
2. From Phase Control Functions Menu press '2' (Dynamic/Backup Control Functions).

```
DYNAMIC/BACKUP CONTROL FUNCTION #01
                 OVERLAPS:¦ABCDEFGHIJKLMNOP
IF OVERLAPS ARE ACTIVE ¦
OR        PHASES:¦123456789101112131415 16
IF PHASES ARE ON¦   X
OMIT PHASES     ¦   X
CALL PHASES     ¦
```

BACKUP PROTECTION PROGRAMMING COMPLETE

OVERLAP PROGRAMMING DETAIL

(program controller as shown below)

FROM MAIN MENU PRESS '8' (OVERLAPS), THEN '1' (VEHICLE OVERLAP SETTINGS).

```
PAGE 1: VEHICLE OVERLAP 'A' SETTINGS
PHASE:          ¦123456789101112131415 16
VEH OVL PARENTS:¦ X
VEH OVL NOT VEH:¦
VEH OVL NOT PED:¦
VEH OVL GRN EXT:¦
STARTUP COLOR: _ RED  _ YELLOW  _ GREEN
FLASH COLORS:  _ RED  _ YELLOW  X GREEN
SELECT VEHICLE OVERLAP OPTIONS:   (Y/N)
FLASH YELLOW IN CONTROLLER FLASH?...Y
GREEN EXTENSION (0-255 SEC).........0
YELLOW CLEAR (0=PARENT,3-25.5 SEC)..0.0
RED CLEAR (0=PARENT,0.1-25.5 SEC)...0.0
OUTPUT AS PHASE # (0=NONE, 1-16)....0
```

NOTICE GREEN FLASH

PRESS '+'

```
PAGE 1: VEHICLE OVERLAP 'B' SETTINGS
PHASE:          ¦123456789101112131415 16
VEH OVL PARENTS:¦  XX
VEH OVL NOT VEH:¦
VEH OVL NOT PED:¦
VEH OVL GRN EXT:¦
STARTUP COLOR: _ RED  _ YELLOW  _ GREEN
FLASH COLORS:  _ RED  _ YELLOW  X GREEN
SELECT VEHICLE OVERLAP OPTIONS:   (Y/N)
FLASH YELLOW IN CONTROLLER FLASH?...N
GREEN EXTENSION (0-255 SEC).........0
YELLOW CLEAR (0=PARENT,3-25.5 SEC)..0.0
RED CLEAR (0=PARENT,0.1-25.5 SEC)...0.0
OUTPUT AS PHASE # (0=NONE, 1-16)....0
```

NOTICE GREEN FLASH

PRESS '+'

```
PAGE 1: VEHICLE OVERLAP 'C' SETTINGS
PHASE:          ¦123456789101112131415 16
VEH OVL PARENTS:¦    XX
VEH OVL NOT VEH:¦
VEH OVL NOT PED:¦
VEH OVL GRN EXT:¦
STARTUP COLOR: _ RED  _ YELLOW  _ GREEN
FLASH COLORS:  _ RED  _ YELLOW  X GREEN
SELECT VEHICLE OVERLAP OPTIONS:   (Y/N)
FLASH YELLOW IN CONTROLLER FLASH?...Y
GREEN EXTENSION (0-255 SEC).........0
YELLOW CLEAR (0=PARENT,3-25.5 SEC)..0.0
RED CLEAR (0=PARENT,0.1-25.5 SEC)...0.0
OUTPUT AS PHASE # (0=NONE, 1-16)....0
```

NOTICE GREEN FLASH

OVERLAP PROGRAMMING COMPLETE

FLASHER CIRCUIT MODIFICATION DETAIL

IN ORDER TO INSURE THAT SIGNALS FLASH CONCURRENTLY ON THE SAME APPROACH, MAKE THE FOLLOWING FLASHER CIRCUIT CHANGES:

1. ON REAR OF PDA - REMOVE WIRE FROM TERM. T2-4 AND TERMINATE ON T2-2.
2. ON REAR OF PDA - REMOVE WIRE FROM TERM. T2-5 AND TERMINATE ON T2-3.
3. REMOVE FLASHER UNIT 2.

THE CHANGES LISTED ABOVE TIES ALL PHASES AND OVERLAPS TO FLASHER UNIT 1.

THIS ELECTRICAL DETAIL IS FOR
THE SIGNAL DESIGN: 04-1432
DESIGNED: January 2018
SEALED: 5/25/2018
REVISED: N/A

Electrical Detail - Sheet 2 of 2

DOCUMENT NOT CONSIDERED FINAL UNLESS ALL SIGNATURES COMPLETED

Prepared by
URS
URS Corporation – North Carolina
1600 Perimeter Park Drive
Morrisville, North Carolina 27560
TELEPHONE (919) 461-1100 FAX (919) 461-1415
NC LICENSE • C-2243

ELECTRICAL AND PROGRAMMING DETAILS FOR:

Prepared for the Offices of:
Division of Highways, Traffic Engineering & Safety Systems Branch, Signals Management Section
750 N.Greenfield Pkwy,Garner,NC 27529

NC 42
at
Flowers Parkway

Division 4 Johnston County Clayton

PLAN DATE: January 2018	REVIEWED BY: J O Deaton		
PREPARED BY: M W Yalch	REVIEWED BY:		
REVISIONS		INIT.	DATE

NORTH CAROLINA PROFESSIONAL SEAL 07438 ENGINEER JAMES O. DEATON

DocuSigned by: James O Deaton 40FF8AC430BD40F... 5/25/2018

SIG. INVENTORY NO. 04-1432

5/25/2018
L:\Morrisville\Jobs\R3825B\Traffic\Signals\Electricals\04-1432e-00-192.dgn
coxs1

DocuSign Envelope ID: EDEA80FB-80A3-45F4-B6C8-CD80310DC6C8

METAL POLE No. 1 and 2

PROJECT REFERENCE NO.	SHEET NO.
R-3825B	Sig.15.3

Design Loading for METAL POLE NO. 1

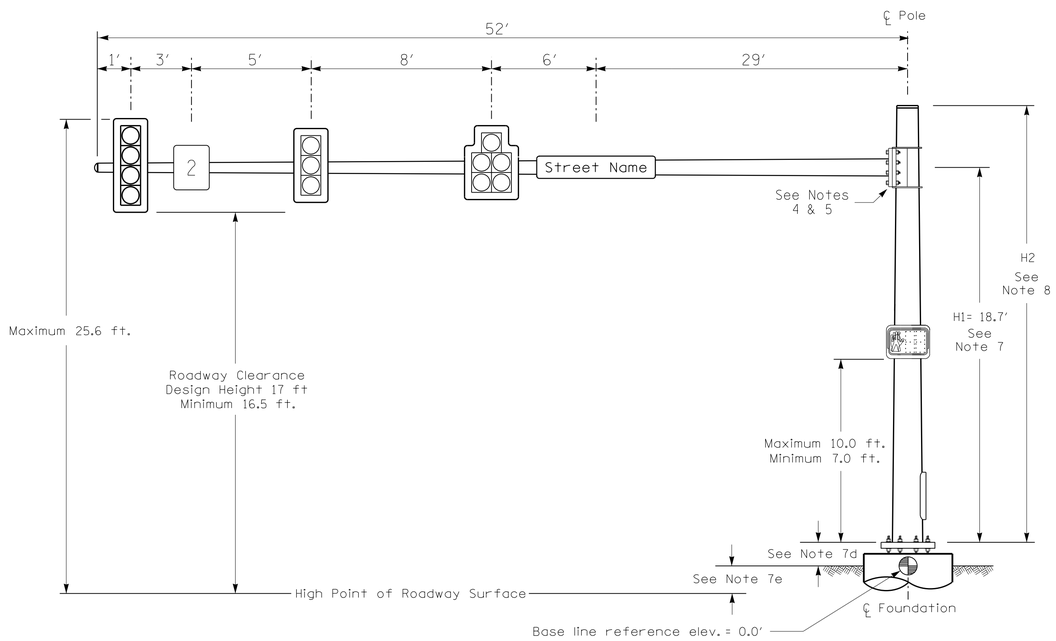

Elevation View

Design Loading for METAL POLE NO. 2

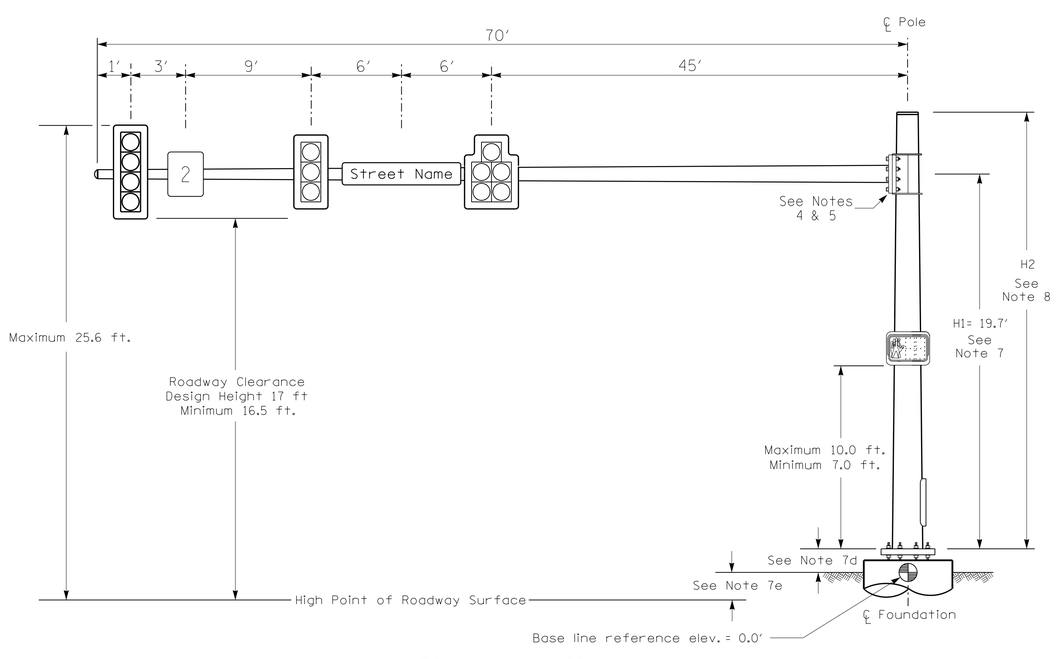

Elevation View

SPECIAL NOTE

The contractor is responsible for verifying that the mast arm attachment height (H1) will provide the "Design Height" clearance from the roadway before submitting final shop drawings for approval. Verify elevation data below which was obtained by field measurement or from available project survey data.

Elevation Data for Mast Arm Attachment (H1)

Elevation Differences for:	Pole 1	Pole 2
Baseline reference point at ℄ Foundation @ ground level	0.0 ft.	0.0 ft.
Elevation difference at High point of roadway surface	-0.5 ft.	+0.7 ft.
Elevation difference at Edge of travelway or face of curb	-0.5 ft.	-0.6 ft.

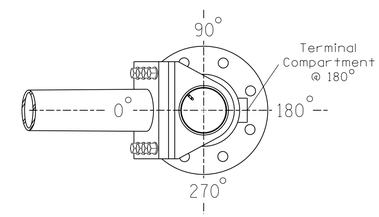

POLE RADIAL ORIENTATION

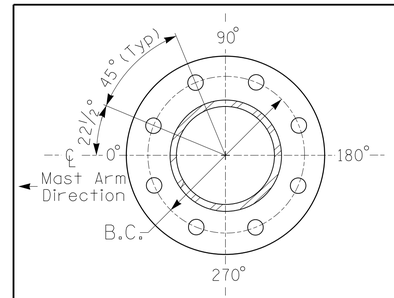

8 BOLT BASE PLATE DETAIL

See Note 6

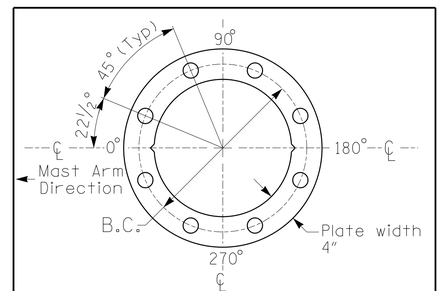

BASE PLATE TEMPLATE & ANCHOR BOLT LOCK PLATE DETAIL

For 8 Bolt Base Plate

MAST ARM LOADING SCHEDULE

LOADING SYMBOL	DESCRIPTION	AREA	SIZE	WEIGHT
	RIGID MOUNTED SIGNAL HEAD 12″-4 SECTION-WITH BACKPLATE	11.5 S.F.	25.5″ W X 66.0″ L	74 LBS
	RIGID MOUNTED SIGNAL HEAD 12″-3 SECTION-WITH BACKPLATE	9.3 S.F.	25.5″ W X 52.5″ L	60 LBS
	RIGID MOUNTED SIGNAL HEAD 12″-5 SECTION-WITH BACKPLATE	16.3 S.F.	42.0″ W X 56.0″ L	103 LBS
	PEDESTRIAN SIGNAL HEAD WITH MOUNTING HARDWARE	2.2 S.F.	18.5″ W X 17.0″ L	21 LBS
Street Name	STREET NAME SIGN RIGID MOUNTED	16.0 S.F.	24.0″ W X 96.0″ L	36 LBS
2	SIGN RIGID MOUNTED	7.5 S.F.	30.0″ W X 36.0″ L	14 LBS

NOTES

DESIGN REFERENCE MATERIAL

1. Design the traffic signal structure and foundation in accordance with:
   - The 6th Edition 2013 AASHTO "Standard Specifications for Structural Supports for Highway Signs, Luminaires, and Traffic Signals, including all of the latest interim revisions.
   - The 2018 NCDOT "Standard Specifications for Roads and Structures." The latest addenda to the specifications can be found in the traffic signal project special provisions.
   - The 2018 NCDOT Roadway Standard Drawings.
   - The traffic signal project plans and special provisions.
   - The NCDOT "Metal Pole Standards" located at the following NCDOT website: https://connect.ncdot.gov/resources/safety/Pages/ITS-Design-Resources.aspx

DESIGN REQUIREMENTS

2. Design the traffic signal structure using the loading conditions shown in the elevation views. These are anticipated worst case "design loads" and may not represent the actual loads that will be applied at the time of the installation. The contractor should refer to the traffic signal plans for the actual loads that will be applied at the time of the installation.
3. Design all signal supports using stress ratios that do not exceed 0.9.
4. The camber design for the mast arm deflection should provide an appearance of a low pitched arch where the tip or the free end of the mast arm does not deflect below horizontal when fully loaded.
5. A clamp-type bolted mast arm-to-pole connection may be used instead of the welded ring stiffened box connection shown as long as the connection meets all of the design requirements.
6. Design base plate with 8 anchor bolt holes. Provide 2 inch x 60 inch anchor bolts.
7. The mast arm attachment height (H1) shown is based on the following design assumptions:
   a. Mast arm slope and deflection are not considered in determining the arm attachment height as they are assumed to offset each other.
   b. Signal heads are rigidly mounted and vertically centered on the mast arm.
   c. The roadway clearance height for design is as shown in the elevation views.
   d. The top of the pole base plate is 0.75 feet above the ground elevation.
   e. Refer to the Elevation Data Chart for the elevation differences between the proposed foundation ground level and the high point of the roadway.
8. The pole manufacturer will determine the total height (H2) of each pole using the greater of the following:
   - Mast arm attachment height (H1) plus 2 feet, or
   - H1 plus 1/2 of the total height of the mast arm attachment assembly plus 1 foot.
9. If pole location adjustments are required, the contractor must gain approval from the Engineer as this may affect the mast arm lengths and arm attachment heights. The contractor may contact the Signal Design Section Senior Structural Engineer for assistance at (919) 814-5400.
10. The contractor is responsible for verifying that the mast arm length shown will allow proper positioning of the signal heads over the roadway.
11. The contractor is responsible for providing soil penetration testing data (SPT) to the pole manufacturer so site specific foundations can be designed.

All metal poles and arms should be black in color as specified in the project special provisions.

Prepared by
URS
URS Corporation – North Carolina
1600 Perimeter Park Drive
Morrisville, North Carolina 27560
TELEPHONE (919) 461-1100 FAX (919) 461-1415
NC LICENSE • C-2243

NCDOT Wind Zone 3 (110 mph)

DOCUMENT NOT CONSIDERED FINAL UNLESS ALL SIGNATURES COMPLETED

Prepared for the Offices of:
Transportation Mobility and Safety Division
Signal Design Section
750 N.Greenfield Pkwy,Garner,NC 27529

NC 42
at
Flowers Parkway

Division 4 Johnston County Clayton

PLAN DATE:	January 2018	REVIEWED BY:	C. L. Kalenick
PREPARED BY:	S. W. Cox	REVIEWED BY:	

SCALE 0 N/A N/A

REVISIONS	INIT.	DATE

NORTH CAROLINA PROFESSIONAL SEAL 040715 ENGINEER COURTNEY L. KALENICK

DocuSigned by: Courtney L. Kalenick 0FE815CE2B64FE... 5/25/2018

SIG. INVENTORY NO. 04-1432

5/25/2018
L:\Officer\Svill\Jobs\R3825B\Traffic\Signals\04I432_sig_mp1.2018DATE.dgn
coxst

DocuSign Envelope ID: EDEA80FB-80A3-45F4-B6C8-CD80310DC6C8

METAL POLE No. 3 and 4

PROJECT REFERENCE NO.	SHEET NO.
R-3825B	Sig.15.4

Design Loading for METAL POLE NO. 3

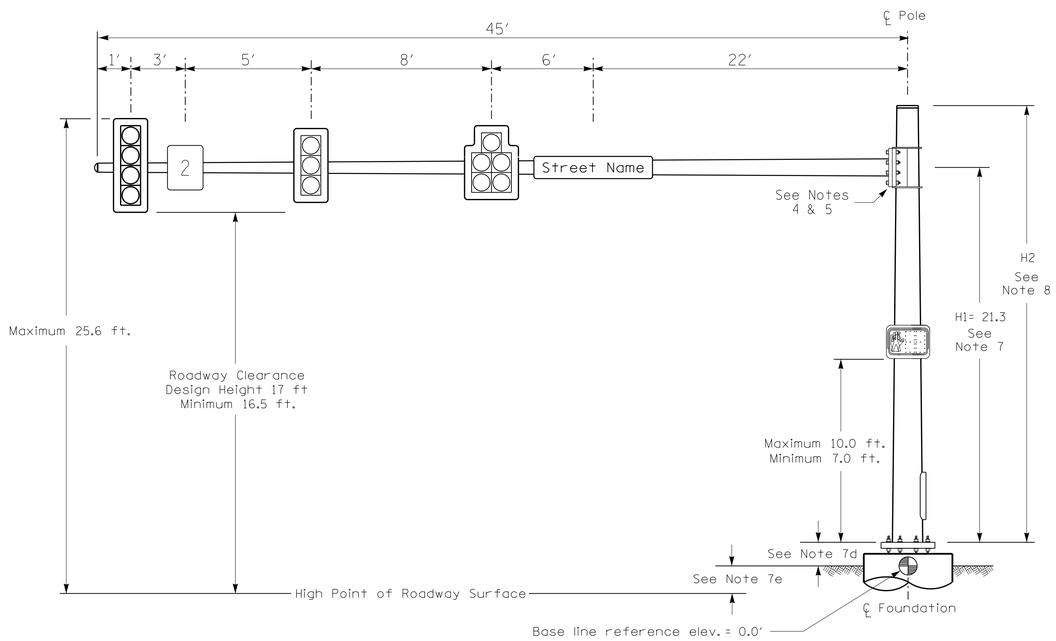

Elevation View

Design Loading for METAL POLE NO. 4

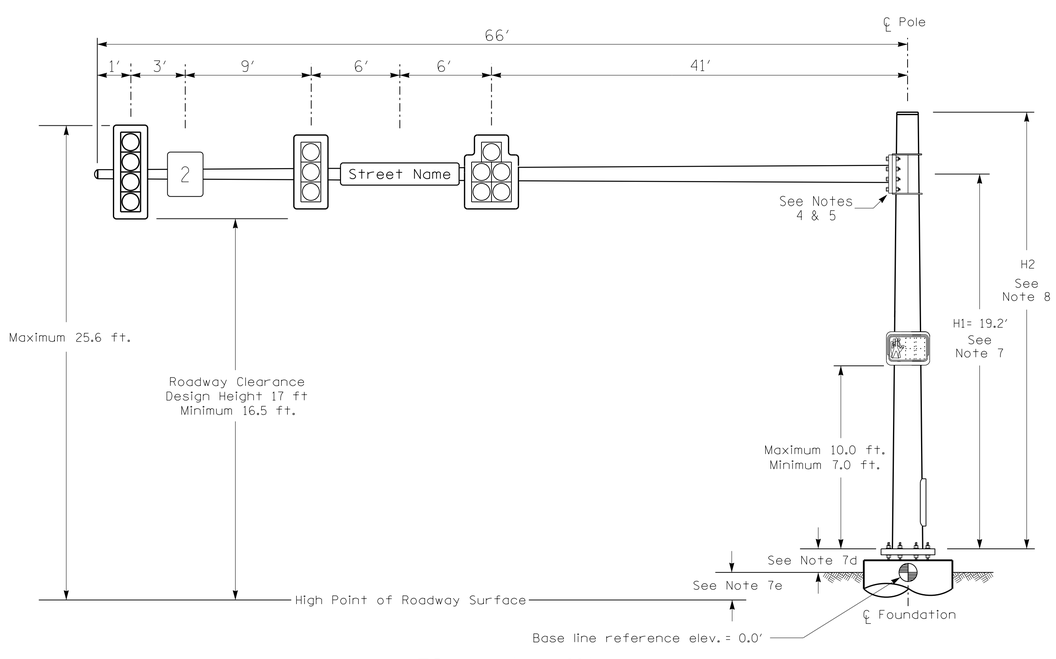

Elevation View

SPECIAL NOTE

The contractor is responsible for verifying that the mast arm attachment height (H1) will provide the "Design Height" clearance from the roadway before submitting final shop drawings for approval. Verify elevation data below which was obtained by field measurement or from available project survey data.

Elevation Data for Mast Arm Attachment (H1)

Elevation Differences for:	Pole 3	Pole 4
Baseline reference point at ℄ Foundation @ ground level	0.0 ft.	0.0 ft.
Elevation difference at High point of roadway surface	+2.0 ft.	-0.1 ft.
Elevation difference at Edge of travelway or face of curb	+1.7 ft.	-1.5 ft.

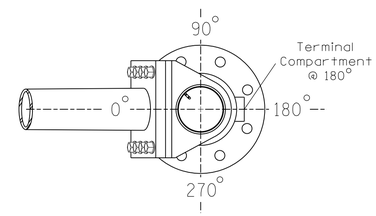

POLE RADIAL ORIENTATION

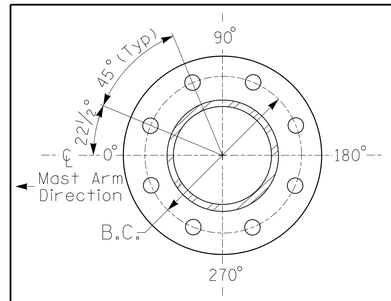

8 BOLT BASE PLATE DETAIL

See Note 6

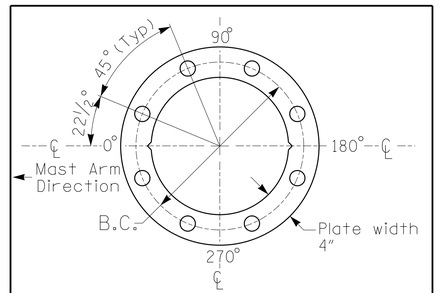

BASE PLATE TEMPLATE & ANCHOR BOLT LOCK PLATE DETAIL

For 8 Bolt Base Plate

MAST ARM LOADING SCHEDULE

LOADING SYMBOL	DESCRIPTION	AREA	SIZE	WEIGHT
	RIGID MOUNTED SIGNAL HEAD 12″-4 SECTION-WITH BACKPLATE	11.5 S.F.	25.5″ W X 66.0″ L	74 LBS
	RIGID MOUNTED SIGNAL HEAD 12″-3 SECTION-WITH BACKPLATE	9.3 S.F.	25.5″ W X 52.5″ L	60 LBS
	RIGID MOUNTED SIGNAL HEAD 12″-5 SECTION-WITH BACKPLATE	16.3 S.F.	42.0″ W X 56.0″ L	103 LBS
	PEDESTRIAN SIGNAL HEAD WITH MOUNTING HARDWARE	2.2 S.F.	18.5″ W X 17.0″ L	21 LBS
Street Name	STREET NAME SIGN RIGID MOUNTED	16.0 S.F.	24.0″ W X 96.0″ L	36 LBS
2	SIGN RIGID MOUNTED	7.5 S.F.	30.0″ W X 36.0″ L	14 LBS

NOTES

DESIGN REFERENCE MATERIAL

1. Design the traffic signal structure and foundation in accordance with:
   - The 6th Edition 2013 AASHTO "Standard Specifications for Structural Supports for Highway Signs, Luminaires, and Traffic Signals, including all of the latest interim revisions.
   - The 2018 NCDOT "Standard Specifications for Roads and Structures." The latest addenda to the specifications can be found in the traffic signal project special provisions.
   - The 2018 NCDOT Roadway Standard Drawings.
   - The traffic signal project plans and special provisions.
   - The NCDOT "Metal Pole Standards" located at the following NCDOT website: https://connect.ncdot.gov/resources/safety/Pages/ITS-Design-Resources.aspx

DESIGN REQUIREMENTS

2. Design the traffic signal structure using the loading conditions shown in the elevation views. These are anticipated worst case "design loads" and may not represent the actual loads that will be applied at the time of the installation. The contractor should refer to the traffic signal plans for the actual loads that will be applied at the time of the installation.
3. Design all signal supports using stress ratios that do not exceed 0.9.
4. The camber design for the mast arm deflection should provide an appearance of a low pitched arch where the tip or the free end of the mast arm does not deflect below horizontal when fully loaded.
5. A clamp-type bolted mast arm-to-pole connection may be used instead of the welded ring stiffened box connection shown as long as the connection meets all of the design requirements.
6. Design base plate with 8 anchor bolt holes. Provide 2 inch x 60 inch anchor bolts.
7. The mast arm attachment height (H1) shown is based on the following design assumptions:
   a. Mast arm slope and deflection are not considered in determining the arm attachment height as they are assumed to offset each other.
   b. Signal heads are rigidly mounted and vertically centered on the mast arm.
   c. The roadway clearance height for design is as shown in the elevation views.
   d. The top of the pole base plate is 0.75 feet above the ground elevation.
   e. Refer to the Elevation Data Chart for the elevation differences between the proposed foundation ground level and the high point of the roadway.
8. The pole manufacturer will determine the total height (H2) of each pole using the greater of the following:
   - Mast arm attachment height (H1) plus 2 feet, or
   - H1 plus 1/2 of the total height of the mast arm attachment assembly plus 1 foot.
9. If pole location adjustments are required, the contractor must gain approval from the Engineer as this may affect the mast arm lengths and arm attachment heights. The contractor may contact the Signal Design Section Senior Structural Engineer for assistance at (919) 814-5400.
10. The contractor is responsible for verifying that the mast arm length shown will allow proper positioning of the signal heads over the roadway.
11. The contractor is responsible for providing soil penetration testing data (SPT) to the pole manufacturer so site specific foundations can be designed.

All metal poles and arms should be black in color as specified in the project special provisions.

Prepared by
URS
URS Corporation – North Carolina
1600 Perimeter Park Drive
Morrisville, North Carolina 27560
TELEPHONE (919) 461-1100 FAX (919) 461-1415
NC LICENSE • C-2243

NCDOT Wind Zone 3 (110 mph)

DOCUMENT NOT CONSIDERED FINAL UNLESS ALL SIGNATURES COMPLETED

Prepared for the Offices of: Transportation Mobility and Safety Division, Signal Design Section, Department of Transportation, State of North Carolina
750 N.Greenfield Pkwy,Garner,NC 27529

NC 42
at
Flowers Parkway

Division 4 Johnston County Clayton

PLAN DATE:	January 2018	REVIEWED BY:	C. L. Kalencik
PREPARED BY:	S. W. Cox	REVIEWED BY:	

SCALE 0 N/A N/A

REVISIONS	INIT.	DATE

NORTH CAROLINA PROFESSIONAL SEAL 040715 ENGINEER COURTNEY L. KALENCIK

DocuSigned by: Courtney L. Kalencik 0FE915CE2B64FE... 5/25/2018

SIG. INVENTORY NO. 04-1432

5/25/2018
L:\Officefiles\Traffic\Signals\R3825B\Traffic\Signals\04-1432_sig_m2_2018DATE.dgn
cdxst

DocuSign Envelope ID: EDEA80FB-80A3-45F4-B6C8-CD80310DC6C8

PROJECT REFERENCE NO.	SHEET NO.
R-3825B	Sig.16.0

PHASING DIAGRAM

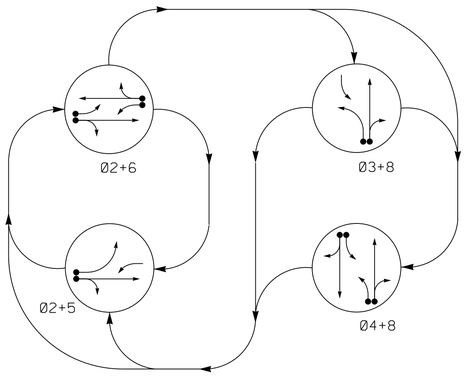

PHASING DIAGRAM DETECTION LEGEND

- DETECTED MOVEMENT
- UNDETECTED MOVEMENT (OVERLAP)
- UNSIGNALIZED MOVEMENT
- PEDESTRIAN MOVEMENT

TABLE OF OPERATION

SIGNAL FACE	PHASE 02+5	02+6	03+8	04+8	FLASH
21, 22	G	G	R	R	Y
31	←R	←R	←	F Y	←R
41	←R	←R	F Y	F Y	←R
42, 43	R	R	R	G	R
51	←	F Y	←R	←R	←Y
61	F Y	F Y	←R	←R	←Y
62, 63	R	G	R	R	Y
81, 82	R	R	G	G	R

SIGNAL FACE I.D.

All Heads L.E.D.

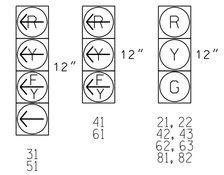

OASIS 2070 LOOP & DETECTOR INSTALLATION CHART

INDUCTIVE LOOPS					DETECTOR PROGRAMMING							
LOOP	SIZE (FT)	DISTANCE FROM STOPBAR (FT)	TURNS	NEW LOOP	PHASE	CALLING	EXTENSION	FULL TIME DELAY	STRETCH TIME	DELAY TIME	SYSTEM LOOP	NEW CARD
2A	6X6	300	✳	Y	2	Y	Y	-	-	-	-	✳
2B	6X40	0	✳	Y	2	Y	Y	Y	2.0	5	-	✳
3A	6X40	0	✳	Y	3	Y	Y	-	-	15	-	✳
					8	Y	Y	-	-	3	-	✳
4A	6X40	0	✳	Y	4	Y	Y	-	-	3	-	✳
4B	6X40	0	✳	Y	4	Y	Y	-	-	3	-	✳
4C	6X40	0	✳	Y	4	Y	Y	-	-	15	-	✳
5A	6X40	0	✳	Y	5	Y	Y	-	-	15	-	✳
					2	Y	Y	Y	-	3	-	✳
6A	6X6	300	✳	Y	6	Y	Y	-	-	-	-	✳
6B	6X40	0	✳	Y	6	Y	Y	Y	-	3	-	✳
6C	6X40	0	✳	Y	6	Y	Y	Y	2.0	5	-	✳
8A	6X40	0	✳	Y	8	Y	Y	-	-	3	-	✳
8B	6X40	0	✳	Y	8	Y	Y	-	-	15	-	✳

✳ Video Detection Zone

4 Phase
Fully Actuated
Isolated

NOTES

1. Refer to "Roadway Standard Drawings NCDOT" dated January 2018, "Standard Specifications for Roads and Structures" dated January 2018.
2. Do not program signal for late night flashing operation unless otherwise directed by the Engineer.
3. Phase 3 may be lagged.
4. Phase 5 may be lagged.
5. Set all detector units to presence mode.
6. Locate new cabinet so as not to obstruct sight distance of vehicles turning right on red.

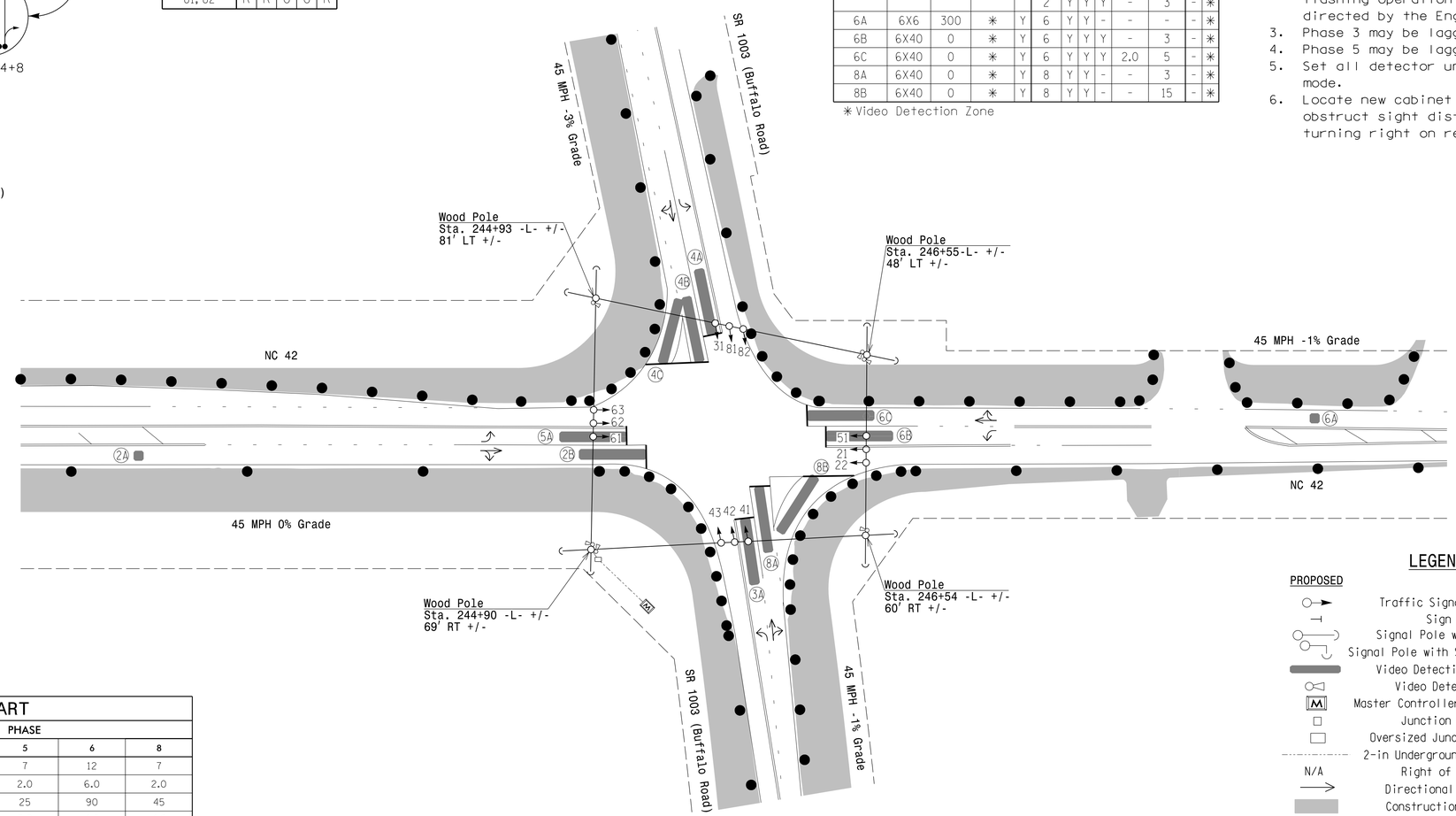

LEGEND

PROPOSED		EXISTING
	Traffic Signal Head	
	Sign	
	Signal Pole with Guy	
	Signal Pole with Sidewalk Guy	
	Video Detection Area	
	Video Detector	
M	Master Controller & Cabinet	M
	Junction Box	
	Oversized Junction Box	
	2-in Underground Conduit	
N/A	Right of Way	
	Directional Arrow	
	Construction Zone	
	Construction Drums	N/A

OASIS 2070 TIMING CHART

FEATURE	PHASE 2	3	4	5	6	8
Min Green 1 *	12	7	7	7	12	7
Extension 1 *	6.0	2.0	2.0	2.0	6.0	2.0
Max Green 1 *	90	25	45	25	90	45
Yellow Clearance	4.6	3.2	4.8	3.2	4.6	4.8
Red Clearance	1.5	2.0	1.0	2.0	1.5	1.0
Red Revert	2.0	2.0	2.0	2.0	2.0	2.0
Walk 1 *	-	-	-	-	-	-
Don't Walk 1	-	-	-	-	-	-
Seconds Per Actuation *	-	-	-	-	-	-
Max Variable Initial *	-	-	-	-	-	-
Time Before Reduction *	15	-	-	-	15	-
Time To Reduce *	30	-	-	-	30	-
Minimum Gap	3.0	-	-	-	3.0	-
Recall Mode	MIN RECALL	-	-	-	MIN RECALL	-
Vehicle Call Memory	-	-	-	-	-	-
Dual Entry	-	-	ON	-	-	ON
Simultaneous Gap	ON	ON	ON	ON	ON	ON

* These values may be field adjusted. Do not adjust Min Green and Extension times for phases 2 and 6 lower than what is shown. Min Green for all other phases should not be lower than 4 seconds.

5/25/2018
L:\Traffic\Signals\R3825B\Traffic\Signals\04087411_sig_dsn_date.dgn
cox5T

Signal Upgrade - Temporary Design 1 (TMP Phase I & II)

DOCUMENT NOT CONSIDERED FINAL UNLESS ALL SIGNATURES COMPLETED

Prepared for the Offices of:
Transportation Mobility and Safety Division
Signal Design Section
750 N.Greenfield Pkwy,Garner,NC 27529

NC 42 at SR 1003 (Buffalo Road)

Division 4 Johnston County Clayton

PLAN DATE: January 2018 REVIEWED BY: C. L. Kalencik
PREPARED BY: S. W. Cox REVIEWED BY:

SCALE 0 40 1"=40'

REVISIONS	INIT.	DATE

NORTH CAROLINA PROFESSIONAL SEAL 040715 ENGINEER COURTNEY L. KALENCIK
DocuSigned by: Courtney L. Kalencik 0FE815BCE2B64FE... 5/25/2018

SIG. INVENTORY NO. 04-0874TI

Prepared by
URS
URS Corporation – North Carolina
1600 Perimeter Park Drive
Morrisville, North Carolina 27560
TELEPHONE (919) 461-1100 FAX (919) 461-1415
NC LICENSE • C-2243

DocuSign Envelope ID: EDEA80FB-80A3-45F4-B6C8-CD80310DC6C8

PROJECT REFERENCE NO.	SHEET NO.
R-3825B	Sig. 16.1

EDI MODEL 2018ECL-NC CONFLICT MONITOR PROGRAMMING DETAIL

(remove jumpers and set switches as shown)

REMOVE DIODE JUMPERS 2-5, 2-6, 2-9, 2-11, 3-8, 3-10, 3-12, 4-8, 4-10, 4-12, 5-9, 5-11, 6-9, 6-11, 8-10, 8-12, 9-11 AND 10-12.

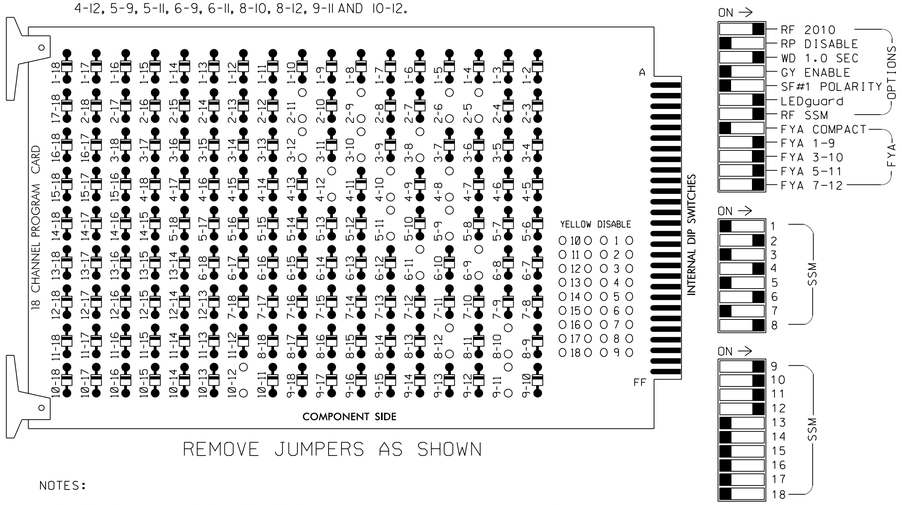

REMOVE JUMPERS AS SHOWN

NOTES:

1. Card is provided with all diode jumpers in place. Removal of any jumper allows its channels to run concurrently.
2. Ensure jumpers SEL2-SEL5 and SEL9 are present on the monitor board.
3. Ensure that Red Enable is active at all times during normal operation.
4. Connect serial cable from conflict monitor to comm. port 1 of 2070 controller. Ensure conflict monitor communicates with 2070.

NOTES

1. To prevent "flash-conflict" problems, insert red flash program blocks for all unused vehicle load switches in the output file. The installer shall verify that signal heads flash in accordance with the Signal Plans.
2. Program phases 4 and 8 for Dual Entry.
3. Enable Simultaneous Gap-Out for all Phases.
4. Program phases 2 and 6 for Gap Reduction.
5. Program phases 2 and 6 for Startup In Green.
6. Program phases 2 and 6 for Yellow Flash, and overlaps 1 and 2 as Wag Overlaps.

SIGNAL HEAD HOOK-UP CHART

LOAD SWITCH NO.	S1	S2	S3	S4	S5	S6	S7	S8	S9	S10	S11	S12	AUX S1	AUX S2	AUX S3	AUX S4	AUX S5	AUX S6
CMU CHANNEL NO.	1	2	13	3	4	14	5	6	15	7	8	16	9	10	17	11	12	18
PHASE	1	2	2 PED	3	4	4 PED	5	6	6 PED	7	8	8 PED	OLA	OLB	SPARE	OLC	OLD	SPARE
SIGNAL HEAD NO.	NU	21,22	NU	31★	42,43	NU	51★	62,63	NU	NU	81,82	NU	61★	31★	NU	51★	41★	NU
RED		128			101			134			107							
YELLOW		129		✳	102		✳	135			108							
GREEN		130			103			136			109							
RED ARROW													A121	A124		A114	A101	
YELLOW ARROW													A122	A125		A115	A102	
FLASHING YELLOW ARROW													A123	A126		A116	A103	
GREEN ARROW				118			133											

NU = Not Used

✳ Denotes install load resistor. See load resistor installation detail this sheet.

★ See pictorial of head wiring in detail below.

EQUIPMENT INFORMATION

CONTROLLER.....2070
CABINET.....332 W/ AUX
SOFTWARE.....ECONOLITE OASIS
CABINET MOUNT.....BASE
OUTPUT FILE POSITIONS...18 WITH AUX. OUTPUT FILE
LOAD SWITCHES USED.....S2,S4,S5,S7,S8,S11,AUX S1, AUX S2,AUX S4,AUX S5
PHASES USED.....2,3,4,5,6,8
OVERLAP "A".....2
OVERLAP "B".....3+4
OVERLAP "C".....5+6
OVERLAP "D".....8

FYA SIGNAL WIRING DETAIL

(wire signal heads as shown)

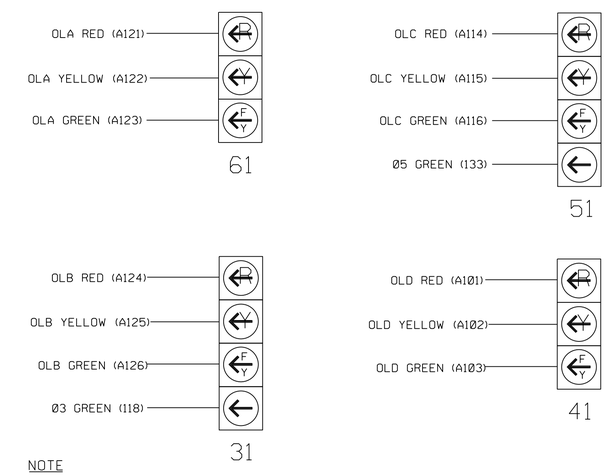

NOTE

The sequence display for signal heads 31 and 51 requires special logic programming. See sheet 2 for programming instructions.

INPUT FILE POSITION LAYOUT

(front view)

		1	2	3	4	5	6	7	8	9	10	11	12	13	14
FILE "I"	U	SLOT	SLOT	SLOT	SLOT	SLOT	SLOT	SLOT	SLOT	SLOT	SLOT	SLOT	SLOT	SLOT	FS DC ISOLATOR
	L	EMPTY	EMPTY	EMPTY	EMPTY	EMPTY	EMPTY	EMPTY	EMPTY	EMPTY	EMPTY	EMPTY	EMPTY	EMPTY	ST DC ISOLATOR
FILE "J"	U	SLOT	SLOT	SLOT	SLOT	SLOT	SLOT	SLOT	SLOT	SLOT	SLOT	SLOT	SLOT	SLOT	SLOT
	L	EMPTY	EMPTY	EMPTY	EMPTY	EMPTY	EMPTY	EMPTY	EMPTY	EMPTY	EMPTY	EMPTY	EMPTY	EMPTY	EMPTY

EX.: 1A, 2A, ETC. = LOOP NO.'S

FS = FLASH SENSE
ST = STOP TIME

INPUT FILE POSITION LEGEND: J2L

FILE J
SLOT 2
LOWER

SPECIAL DETECTOR NOTE

Install a video detection system for vehicle detection. Perform installation according to manufacturer's directions and NCDOT engineer-approved mounting locations to accomplish the detection schemes shown on the Signal Design Plans.

LOAD RESISTOR INSTALLATION DETAIL

(install resistors as shown below)

ACCEPTABLE VALUES

VALUE (ohms)	WATTAGE
1.5K - 1.9K	25W (min)
2.0K - 3.0K	10W (min)

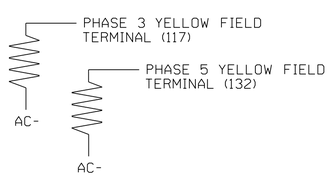

THIS ELECTRICAL DETAIL IS FOR
THE SIGNAL DESIGN: 04-0874T1
DESIGNED: January 2018
SEALED: 5/25/2018
REVISED: N/A

Temporary Design 1 (TMP Phase I & II)
Electrical Detail - Sheet 1 of 2

DOCUMENT NOT CONSIDERED FINAL UNLESS ALL SIGNATURES COMPLETED

Prepared by
URS
URS Corporation – North Carolina
1600 Perimeter Park Drive
Morrisville, North Carolina 27560
TELEPHONE (919) 461-1100 FAX (919) 461-1415
NC LICENSE • C-2243

ELECTRICAL AND PROGRAMMING DETAILS FOR:

Prepared for the Offices of:
Intelligent Transportation Mobility and Safety Division
State of North Carolina
Department of Transportation
Traffic & Signals Management Section
750 N.Greenfield Pkwy.Garner,NC 27529

NC 42
at
SR 1003 (Buffalo Road)

Division 4 Johnston County Clayton

PLAN DATE: January 2018	REVIEWED BY: J O Deaton		
PREPARED BY: M W Yalch	REVIEWED BY:		
REVISIONS		INIT.	DATE

NORTH CAROLINA PROFESSIONAL SEAL 07438 ENGINEER JAMES O. DEATON

DocuSigned by: James O Deaton 40FF8AC430BD40F... 5/25/2018

SIG. INVENTORY NO. 04-0874T1

5/25/2018
L:\Morrisville\Jobs\R3825B\Traffic\Signals\Electricals\04-0874T1e-00-192.dgn
coxs1

DocuSign Envelope ID: EDEA80FB-80A3-45F4-B6C8-CD80310DC6C8

PROJECT REFERENCE NO.	SHEET NO.
R-3825B	Sig. 16.2

LOGICAL I/O PROCESSOR PROGRAMMING DETAIL
TO PRODUCE SPECIAL FYA-PPLT SIGNAL SEQUENCE

(program controller as shown below)

1. FROM MAIN MENU PRESS '2' (PHASE CONTROL), THEN '1' (PHASE CONTROL FUNCTIONS). SCROLL TO THE BOTTOM OF THE MENU AND ENABLE ACT LOGIC COMMANDS 1, 2, 3, 4, 5 AND 6.

2. FROM MAIN MENU PRESS '6' (OUTPUTS), THEN '3' (LOGICAL I/O PROCESSOR).

```
LOGICAL I/O COMMAND #1  (+/-COMMAND#)
IF  ACTIVE PHASE       #3  IS ON
AND RED CLEAR ON PHASE #3  IS ON

SCROLL DOWN

THEN:
SET OUTPUT  ASSIGNMENT #47 ON
SET OUTPUT  ASSIGNMENT #48 OFF
```

NOTE: LOGIC FOR PHASE 3 RED CLEAR WHEN TRANSITIONING FROM PHASE 3 TO PHASE 4 (HEAD 31).

PRESS '+'

```
LOGICAL I/O COMMAND #2  (+/-COMMAND#)
IF  ACTIVE PHASE       #3  IS ON

SCROLL DOWN

THEN:
SET OUTPUT  ASSIGNMENT #49 OFF
```

NOTE: LOGIC FOR SWITCHING FLASHING YELLOW ARROW "OFF" DURING PHASE 3 (HEAD 31).

PRESS '+'

```
LOGICAL I/O COMMAND #3  (+/-COMMAND#)
IF  YELLOW ON PHASE    #3  IS ON

SCROLL DOWN

THEN:
SET OUTPUT  ASSIGNMENT #48 ON
```

NOTE: LOGIC FOR YELLOW ARROW CLEARANCE FROM PHASE 3 (HEAD 31).

PRESS '+'

```
LOGICAL I/O COMMAND #4  (+/-COMMAND#)
IF  ACTIVE PHASE       #5  IS ON
AND RED CLEAR ON PHASE #5  IS ON

SCROLL DOWN

THEN:
SET OUTPUT  ASSIGNMENT #42 ON
SET OUTPUT  ASSIGNMENT #43 OFF
```

NOTE: LOGIC FOR PHASE 5 RED CLEAR WHEN TRANSITIONING FROM PHASE 5 TO PHASE 6 (HEAD 51).

PRESS '+'

```
LOGICAL I/O COMMAND #5  (+/-COMMAND#)
IF  ACTIVE PHASE       #5  IS ON

SCROLL DOWN

THEN:
SET OUTPUT  ASSIGNMENT #44 OFF
```

NOTE: LOGIC FOR SWITCHING FLASHING YELLOW ARROW "OFF" DURING PHASE 5 (HEAD 51).

PRESS '+'

```
LOGICAL I/O COMMAND #6  (+/-COMMAND#)
IF  YELLOW ON PHASE    #5  IS ON

SCROLL DOWN

THEN:
SET OUTPUT  ASSIGNMENT #43 ON
```

NOTE: LOGIC FOR YELLOW ARROW CLEARANCE FROM PHASE 5 (HEAD 51).

LOGIC I/O PROCESSOR PROGRAMMING COMPLETE

OUTPUT REFERENCE SCHEDULE

USE TO INTERPRET LOGIC PROCESSOR

OUTPUT 42 = Overlap C Red
OUTPUT 43 = Overlap C Yellow
OUTPUT 44 = Overlap C Green
OUTPUT 47 = Overlap B Red
OUTPUT 48 = Overlap B Yellow
OUTPUT 49 = Overlap B Green

OVERLAP PROGRAMMING DETAIL

(program controller as shown below)

FROM MAIN MENU PRESS '8' (OVERLAPS), THEN '1' (VEHICLE OVERLAP SETTINGS).

```
PAGE 1: VEHICLE OVERLAP 'A' SETTINGS
PHASE:          ¦123456789101112131415 16
VEH OVL PARENTS:¦ X
VEH OVL NOT VEH:¦
VEH OVL NOT PED:¦
VEH OVL GRN EXT:¦
STARTUP COLOR: _ RED  _ YELLOW  _ GREEN
FLASH COLORS:  _ RED  _ YELLOW  X GREEN
SELECT VEHICLE OVERLAP OPTIONS:   (Y/N)
FLASH YELLOW IN CONTROLLER FLASH?...Y
GREEN EXTENSION (0-255 SEC).........0
YELLOW CLEAR (0=PARENT,3-25.5 SEC)..0.0
RED CLEAR (0=PARENT,0.1-25.5 SEC)...0.0
OUTPUT AS PHASE # (0=NONE, 1-16)....0
```

NOTICE GREEN FLASH

PRESS '+'

```
PAGE 1: VEHICLE OVERLAP 'B' SETTINGS
PHASE:          ¦123456789101112131415 16
VEH OVL PARENTS:¦  XX
VEH OVL NOT VEH:¦
VEH OVL NOT PED:¦
VEH OVL GRN EXT:¦
STARTUP COLOR: _ RED  _ YELLOW  _ GREEN
FLASH COLORS:  _ RED  _ YELLOW  X GREEN
SELECT VEHICLE OVERLAP OPTIONS:   (Y/N)
FLASH YELLOW IN CONTROLLER FLASH?...N
GREEN EXTENSION (0-255 SEC).........0
YELLOW CLEAR (0=PARENT,3-25.5 SEC)..0.0
RED CLEAR (0=PARENT,0.1-25.5 SEC)...0.0
OUTPUT AS PHASE # (0=NONE, 1-16)....0
```

NOTICE GREEN FLASH

PRESS '+'

```
PAGE 1: VEHICLE OVERLAP 'C' SETTINGS
PHASE:          ¦123456789101112131415 16
VEH OVL PARENTS:¦    XX
VEH OVL NOT VEH:¦
VEH OVL NOT PED:¦
VEH OVL GRN EXT:¦
STARTUP COLOR: _ RED  _ YELLOW  _ GREEN
FLASH COLORS:  _ RED  _ YELLOW  X GREEN
SELECT VEHICLE OVERLAP OPTIONS:   (Y/N)
FLASH YELLOW IN CONTROLLER FLASH?...Y
GREEN EXTENSION (0-255 SEC).........0
YELLOW CLEAR (0=PARENT,3-25.5 SEC)..0.0
RED CLEAR (0=PARENT,0.1-25.5 SEC)...0.0
OUTPUT AS PHASE # (0=NONE, 1-16)....0
```

NOTICE GREEN FLASH

PRESS '+'

```
PAGE 1: VEHICLE OVERLAP 'D' SETTINGS
PHASE:          ¦123456789101112131415 16
VEH OVL PARENTS:¦        X
VEH OVL NOT VEH:¦
VEH OVL NOT PED:¦
VEH OVL GRN EXT:¦
STARTUP COLOR: _ RED  _ YELLOW  _ GREEN
FLASH COLORS:  _ RED  _ YELLOW  X GREEN
SELECT VEHICLE OVERLAP OPTIONS:   (Y/N)
FLASH YELLOW IN CONTROLLER FLASH?...N
GREEN EXTENSION (0-255 SEC).........0
YELLOW CLEAR (0=PARENT,3-25.5 SEC)..0.0
RED CLEAR (0=PARENT,0.1-25.5 SEC)...0.0
OUTPUT AS PHASE # (0=NONE, 1-16)....0
```

NOTICE GREEN FLASH

OVERLAP PROGRAMMING COMPLETE

FLASHER CIRCUIT MODIFICATION DETAIL

IN ORDER TO INSURE THAT SIGNALS FLASH CONCURRENTLY ON THE SAME APPROACH, MAKE THE FOLLOWING FLASHER CIRCUIT CHANGES:

1. ON REAR OF PDA - REMOVE WIRE FROM TERM. T2-4 AND TERMINATE ON T2-2.
2. ON REAR OF PDA - REMOVE WIRE FROM TERM. T2-5 AND TERMINATE ON T2-3.
3. REMOVE FLASHER UNIT 2.

THE CHANGES LISTED ABOVE TIES ALL PHASES AND OVERLAPS TO FLASHER UNIT 1.

THIS ELECTRICAL DETAIL IS FOR
THE SIGNAL DESIGN: 04-0874T1
DESIGNED: January 2018
SEALED: 5/25/2018
REVISED: N/A

Temporary Design 1 (TMP Phase I & II)
Electrical Detail - Sheet 2 of 2

DOCUMENT NOT CONSIDERED FINAL UNLESS ALL SIGNATURES COMPLETED

Prepared by
URS
URS Corporation – North Carolina
1600 Perimeter Park Drive
Morrisville, North Carolina 27560
TELEPHONE (919) 461-1100 FAX (919) 461-1415
NC LICENSE • C-2243

ELECTRICAL AND PROGRAMMING DETAILS FOR:

Prepared for the Offices of:
Traffic Engineering Branch, Mobility and Safety Division, Department of Transportation, State of North Carolina
750 N.Greenfield Pkwy,Garner,NC 27529

NC 42
at
SR 1003 (Buffalo Road)

Division 4	Johnston County	Clayton
PLAN DATE: January 2018	REVIEWED BY: J O Deaton	
PREPARED BY: M W Yalch	REVIEWED BY:	

REVISIONS	INIT.	DATE

NORTH CAROLINA PROFESSIONAL SEAL 07438 ENGINEER JAMES O. DEATON

DocuSigned by: Jamo O Deaton 5/25/2018
40FF8AC430BD40F...

SIG. INVENTORY NO. 04-0874T1

5/25/2018
L:\Morrisville\Jobs\R3825B\Traffic\Signals\Electricals\04-0874T1e-00-192.dgn
coxst

DocuSign Envelope ID: EDEA80FB-80A3-45F4-B6C8-CD80310DC6C8

PROJECT REFERENCE NO.	SHEET NO.
R-3825B	Sig.17.0

PHASING DIAGRAM

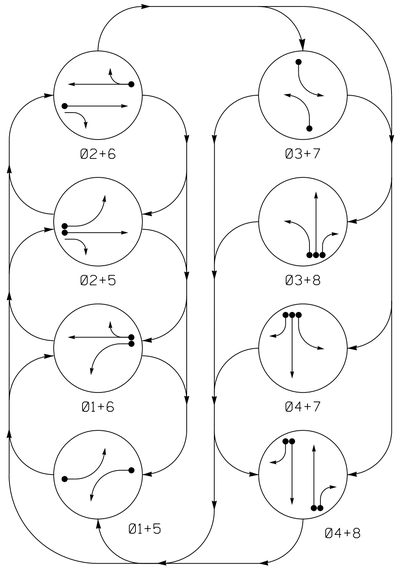

PHASING DIAGRAM DETECTION LEGEND

- DETECTED MOVEMENT
- UNDETECTED MOVEMENT (OVERLAP)
- UNSIGNALIZED MOVEMENT
- PEDESTRIAN MOVEMENT

TABLE OF OPERATION

SIGNAL FACE	PHASE 01+5	01+6	02+5	02+6	03+7	03+8	04+7	04+8	FLASH
11	←	←	~~R~~	~~R~~	~~R~~	~~R~~	~~R~~	~~R~~	~~R~~
21, 22	R	R	G	G	R	R	R	R	Y
31	~~R~~	~~R~~	~~R~~	~~R~~	←	←	~~R~~	~~R~~	~~R~~
42, 43	R	R	R	R	R	R	G	G	R
51	←	~~R~~	←	~~R~~	~~R~~	~~R~~	~~R~~	~~R~~	~~R~~
62, 63	R	G	R	G	R	R	R	R	Y
71	~~R~~	~~R~~	~~R~~	~~R~~	←	~~R~~	←	~~R~~	~~R~~
81, 82	R	R	R	R	R	G	R	G	R

SIGNAL FACE I.D.

All Heads L.E.D.

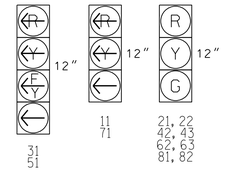

OASIS 2070 LOOP & DETECTOR INSTALLATION CHART

INDUCTIVE LOOPS					DETECTOR PROGRAMMING						
LOOP	SIZE (FT)	DISTANCE FROM STOPBAR (FT)	TURNS	NEW LOOP	PHASE	CALLING	EXTENSION	FULL TIME DELAY	STRETCH TIME	DELAY TIME	SYSTEM LOOP	NEW CARD
1A	6X40	0	✳	Y	1	Y	Y	-	-	-	-	✳
2A	6X6	300	✳	Y	2	Y	Y	-	-	-	-	✳
2B	6X40	0	✳	Y	2	Y	Y	Y	2.0	5	-	✳
3A	6X40	0	✳	Y	3	Y	Y	-	-	-	-	✳
4B	6X40	0	✳	Y	4	Y	Y	-	-	-	-	✳
4C	6X40	0	✳	Y	4	Y	Y	-	-	15	-	✳
5A	6X40	0	✳	Y	5	Y	Y	-	-	-	-	✳
6A	6X6	300	6	Y	6	Y	Y	-	-	-	-	Y
6C	6X40	0	✳	Y	6	Y	Y	Y	2.0	5	-	✳
7A	6X40	0	✳	Y	7	Y	Y	-	-	-	-	✳
8A	6X40	0	✳	Y	8	Y	Y	-	-	-	-	✳
8B	6X40	0	✳	Y	8	Y	Y	-	-	15	-	✳

✳ Video Detection Zone

8 Phase
Fully Actuated
Isolated

NOTES

1. Refer to "Roadway Standard Drawings NCDOT" dated January 2018, "Standard Specifications for Roads and Structures" dated January 2018.
2. Do not program signal for late night flashing operation unless otherwise directed by the Engineer.
3. Phase 1 and/or phase 5 may be lagged.
4. Phase 3 and/or phase 7 may be lagged.
5. Reposition existing signal heads numbered 21, 22, 31, 42, 43, 51, 62, 63, 81, and 82.
6. Set all detector units to presence mode.

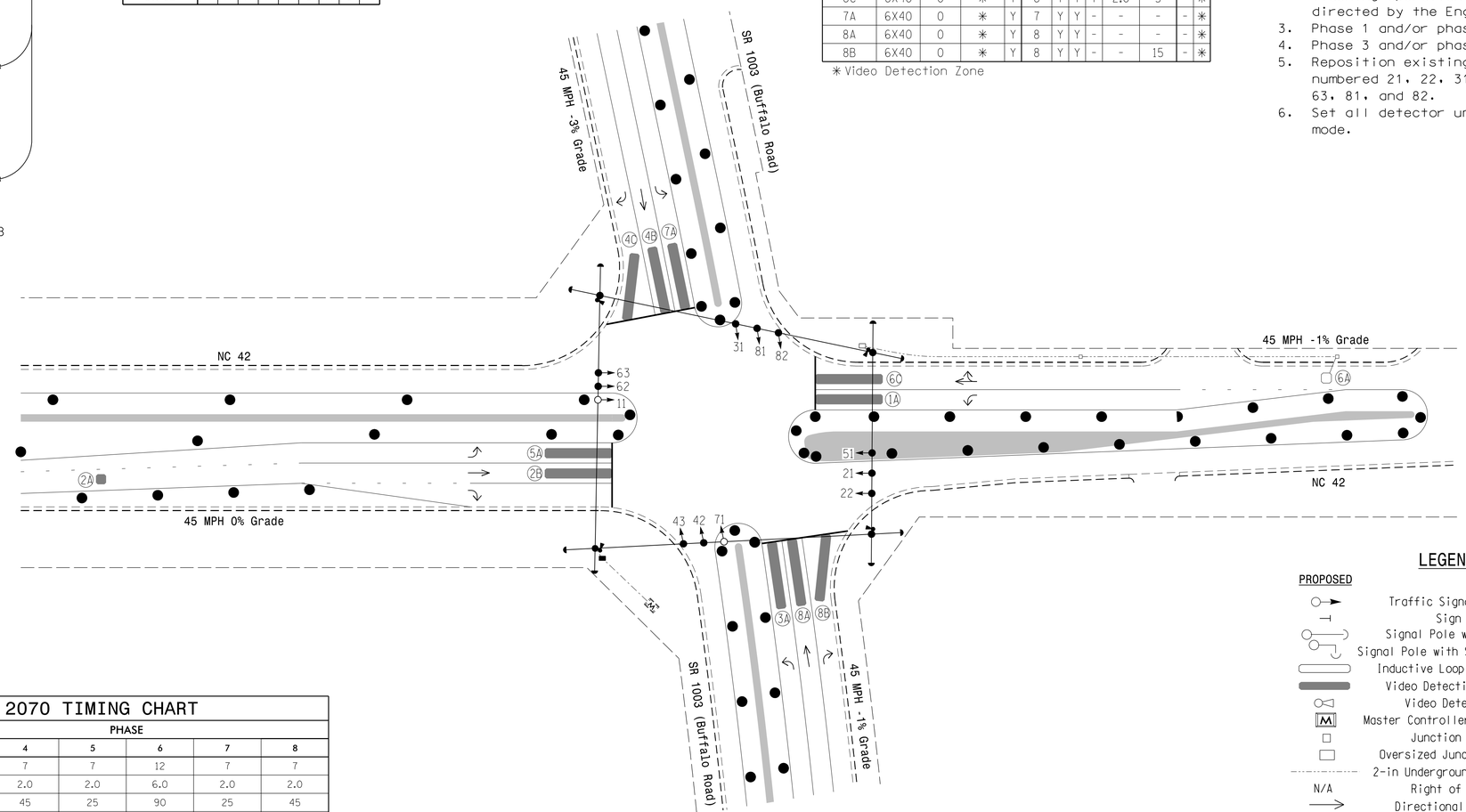

LEGEND

PROPOSED		EXISTING
	Traffic Signal Head	
	Sign	
	Signal Pole with Guy	
	Signal Pole with Sidewalk Guy	
	Inductive Loop Detector	
	Video Detection Area	
	Video Detector	
M	Master Controller & Cabinet	M
	Junction Box	
	Oversized Junction Box	
	2-in Underground Conduit	
N/A	Right of Way	
	Directional Arrow	
	Construction Zone	
	Construction Drums	N/A

OASIS 2070 TIMING CHART

FEATURE	PHASE 1	2	3	4	5	6	7	8
Min Green 1 *	7	12	7	7	7	12	7	7
Extension 1 *	2.0	6.0	2.0	2.0	2.0	6.0	2.0	2.0
Max Green 1 *	25	90	25	45	25	90	25	45
Yellow Clearance	3.2	4.5	3.2	4.8	3.2	4.6	3.3	4.6
Red Clearance	2.6	1.9	3.2	1.9	2.9	1.6	3.3	1.6
Red Revert	2.0	2.0	2.0	2.0	2.0	2.0	2.0	2.0
Walk 1 *	-	-	-	-	-	-	-	-
Don't Walk 1	-	-	-	-	-	-	-	-
Seconds Per Actuation *	-	-	-	-	-	-	-	-
Max Variable Initial *	-	-	-	-	-	-	-	-
Time Before Reduction *	-	15	-	-	-	15	-	-
Time To Reduce *	-	30	-	-	-	30	-	-
Minimum Gap	-	3.0	-	-	-	3.0	-	-
Recall Mode	-	MIN RECALL	-	-	-	MIN RECALL	-	-
Vehicle Call Memory	-	-	-	-	-	-	-	-
Dual Entry	-	-	-	ON	-	-	-	ON
Simultaneous Gap	ON	ON	ON	ON	ON	ON	ON	ON

* These values may be field adjusted. Do not adjust Min Green and Extension times for phases 2 and 6 lower than what is shown. Min Green for all other phases should not be lower than 4 seconds.

Signal Upgrade - Temporary Design 2 (TMP Phase III)

DOCUMENT NOT CONSIDERED FINAL UNLESS ALL SIGNATURES COMPLETED

Prepared for the Offices of:
Transportation Mobility and Safety Division
STATE OF NORTH CAROLINA DEPARTMENT OF TRANSPORTATION
Signal Design Section
750 N.Greenfield Pkwy,Garner,NC 27529

Prepared by
URS
URS Corporation – North Carolina
1600 Perimeter Park Drive
Morrisville, North Carolina 27560
TELEPHONE (919) 461-1100 FAX (919) 461-1415
NC LICENSE • C-2243

NC 42
at
SR 1003 (Buffalo Road)

Division 4 Johnston County Clayton

PLAN DATE: January 2018 REVIEWED BY: C. L. Kalencik
PREPARED BY: S. W. Cox REVIEWED BY:

SCALE 0 40 1"=40'

REVISIONS	INIT.	DATE

NORTH CAROLINA PROFESSIONAL SEAL 040715 ENGINEER COURTNEY L. KALENCIK

DocuSigned by: Courtney L. Kalencik 5/25/2018
0FE9158CE2864FE...

SIG. INVENTORY NO. 04-0874T2

5/25/2018
L:\Work\Sville\Jobs\R3825B\Traffic\Signals\04087472_sig_dsn_date.dgn
coxsi

DocuSign Envelope ID: EDEA80FB-80A3-45F4-B6C8-CD80310DC6C8

PROJECT REFERENCE NO.	SHEET NO.
R-3825B	Sig. 17.1

EDI MODEL 2018ECL-NC CONFLICT MONITOR PROGRAMMING DETAIL

(remove jumpers and set switches as shown)

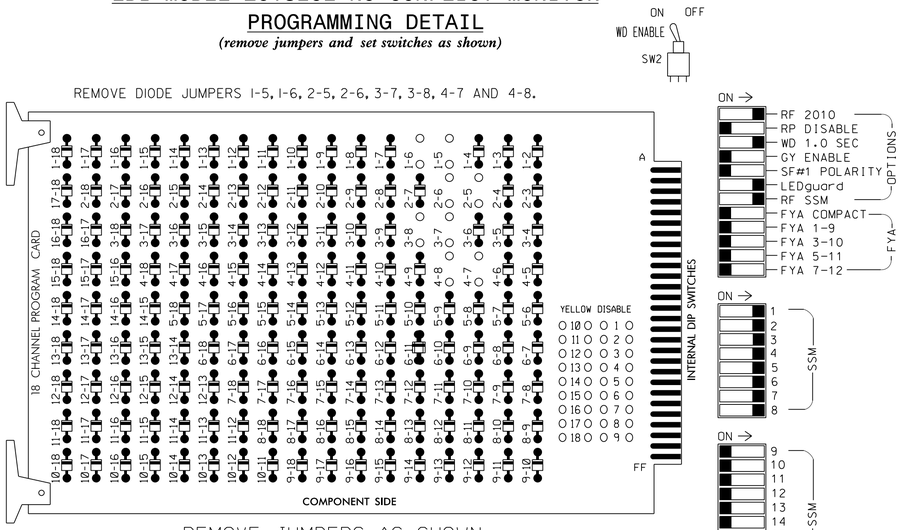

■ = DENOTES POSITION OF SWITCH

NOTES:

1. Card is provided with all diode jumpers in place. Removal of any jumper allows its channels to run concurrently.
2. Ensure jumpers SEL2-SEL5 and SEL9 are present on the monitor board.
3. Ensure that Red Enable is active at all times during normal operation.
4. Connect serial cable from conflict monitor to comm. port 1 of 2070 controller. Ensure conflict monitor communicates with 2070.

NOTES

1. To prevent "flash-conflict" problems, insert red flash program blocks for all unused vehicle load switches in the output file. The installer shall verify that signal heads flash in accordance with the Signal Plans.
2. Return controller to factory defaults before programming per this electrical detail.
3. Program phases 4 and 8 for Dual Entry.
4. Enable Simultaneous Gap-Out for all Phases.
5. Program phases 2 and 6 for Gap Reduction.
6. Program phases 2 and 6 for Startup In Green.
7. Program phases 2 and 6 for Yellow Flash.

EQUIPMENT INFORMATION

CONTROLLER.....2070
CABINET.....332 W/ AUX
SOFTWARE.....ECONOLITE OASIS
CABINET MOUNT.....BASE
OUTPUT FILE POSITIONS...18 WITH AUX. OUTPUT FILE
LOAD SWITCHES USED.....S1,S2,S4,S5,S7,S8,S10,S11
PHASES USED.....1,2,3,4,5,6,7,8
OVERLAP "A".....NOT USED
OVERLAP "B".....NOT USED
OVERLAP "C".....NOT USED
OVERLAP "D".....NOT USED

SIGNAL HEAD HOOK-UP CHART

LOAD SWITCH NO.	S1	S2	S3	S4	S5	S6	S7	S8	S9	S10	S11	S12	AUX S1	AUX S2	AUX S3	AUX S4	AUX S5	AUX S6
CMU CHANNEL NO.	1	2	13	3	4	14	5	6	15	7	8	16	9	10	17	11	12	18
PHASE	1	2	2 PED	3	4	4 PED	5	6	6 PED	7	8	8 PED	OLA	OLB	SPARE	OLC	OLD	SPARE
SIGNAL HEAD NO.	11	21,22	NU	31★	42,43	NU	51★	62,63	NU	71	81,82	NU	NU	NU	NU	NU	NU	NU
RED		128			101			134			107							
YELLOW		129			102			135			108							
GREEN		130			103			136			109							
RED ARROW	125			116			131			122								
YELLOW ARROW	126			117			132			123								
FLASHING YELLOW ARROW																		
GREEN ARROW	127			118			133			124								

NU = Not Used

★ See pictorial of head wiring in detail below.

FYA SIGNAL WIRING DETAIL

(wire signal heads as shown)

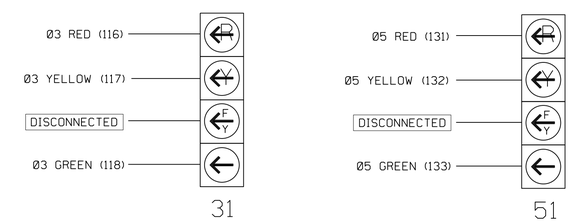

INPUT FILE POSITION LAYOUT

(front view)

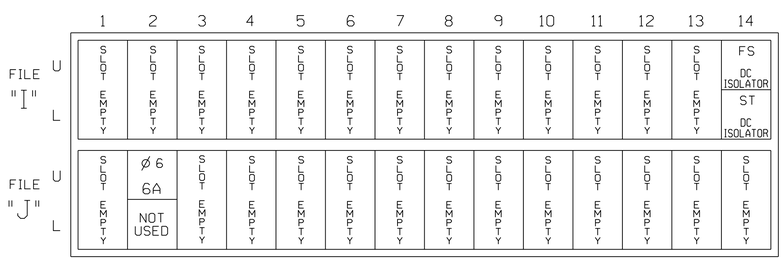

EX.: 1A, 2A, ETC. = LOOP NO.'S

FS = FLASH SENSE
ST = STOP TIME

INPUT FILE CONNECTION & PROGRAMMING CHART

LOOP NO.	LOOP TERMINAL	INPUT FILE POS.	PIN NO.	INPUT ASSIGNMENT NO.	DETECTOR NO.	NEMA PHASE	CALL	EXTEND	FULL TIME DELAY	STRETCH TIME	DELAY TIME
6A	TB3-5,6	J2U	40	2	6	6	Y	Y			

INPUT FILE POSITION LEGEND: J2L
FILE J
SLOT 2
LOWER

LOAD RESISTOR INSTALLATION DETAIL

(install resistors as shown below)

ACCEPTABLE VALUES

VALUE (ohms)	WATTAGE
1.5K - 1.9K	25W (min)
2.0K - 3.0K	10W (min)

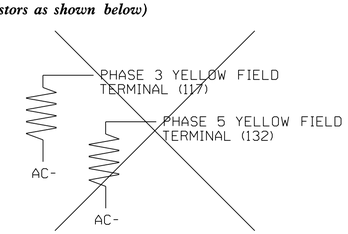

IMPORTANT! Remove resistors from field terminals as shown above, if present.

SPECIAL DETECTOR NOTE

Install a video detection system for vehicle detection. Perform installation according to manufacturer's directions and NCDOT engineer-approved mounting locations to accomplish the detection schemes shown on the Signal Design Plans.

THIS ELECTRICAL DETAIL IS FOR
THE SIGNAL DESIGN: 04-0874T2
DESIGNED: January 2018
SEALED: 5/25/2018
REVISED: N/A

Temporary Design 2 (TMP Phase III)
Electrical Detail

DOCUMENT NOT CONSIDERED FINAL UNLESS ALL SIGNATURES COMPLETED

ELECTRICAL AND PROGRAMMING DETAILS FOR:

NC 42
at
SR 1003 (Buffalo Road)

Division 4 Johnston County Clayton

PLAN DATE:	January 2018	REVIEWED BY:	J O Deaton
PREPARED BY:	M W Yalch	REVIEWED BY:	

REVISIONS	INIT.	DATE

Prepared for the Offices of:
Transportation Mobility and Safety Division
State of North Carolina Department of Transportation
ITS & Signals Management Section
750 N.Greenfield Pkwy,Garner,NC 27529

Prepared by
URS
URS Corporation – North Carolina
1600 Perimeter Park Drive
Morrisville, North Carolina 27560
TELEPHONE (919) 461-1100 FAX (919) 461-1415
NC LICENSE • C-2243

NORTH CAROLINA PROFESSIONAL SEAL 07438 ENGINEER JAMES O. DEATON

DocuSigned by: James O Deaton 5/25/2018
40FF8AC430BD40F...

SIG. INVENTORY NO. 04-0874T2

5/25/2018
L:\Morrisville\Jobs\R3825B\Traffic\Signals\Electricals\04-0874T2e-00-192.dgn
Coxsi

DocuSign Envelope ID: EDEA80FB-80A3-45F4-B6C8-CD80310DC6C8

PROJECT REFERENCE NO.	SHEET NO.
R-3825B	Sig.18.0

PHASING DIAGRAM

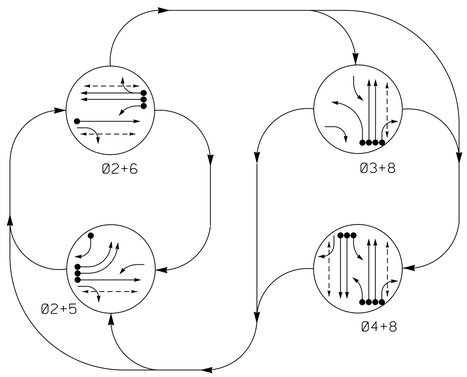

PHASING DIAGRAM DETECTION LEGEND

- DETECTED MOVEMENT
- UNDETECTED MOVEMENT (OVERLAP)
- UNSIGNALIZED MOVEMENT
- PEDESTRIAN MOVEMENT

TABLE OF OPERATION

SIGNAL FACE	PHASE 02+5	02+6	03+8	04+8	FLASH
21	G	G	R	R	Y
22	G	G	R/→	R	Y
31	←R	←R	←	F←Y	←R
41	←R	←R	F←Y	F←Y	←R
42	R	R	R	G	R
43	R/→	R	R	G	R
51, 52	←	←R	←R	←R	←R
61	F←Y	F←Y	←R	←R	←Y
62, 63	R	G	R	R	Y
81, 82	R	R	G	G	R
P21, P22	W	W	DW	DW	DRK
P41, P42	DW	DW	DW	W	DRK
P61, P62	DW	W	DW	DW	DRK
P81, P82	DW	DW	W	W	DRK

SIGNAL FACE I.D.

All Heads L.E.D.

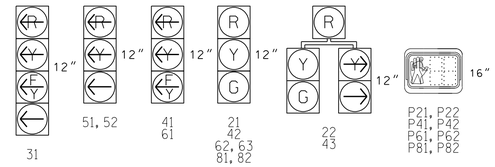

OASIS 2070 LOOP & DETECTOR INSTALLATION CHART

INDUCTIVE LOOPS					DETECTOR PROGRAMMING							
LOOP	SIZE (FT)	DISTANCE FROM STOPBAR (FT)	TURNS	NEW LOOP	PHASE	CALLING	EXTENSION	FULL TIME DELAY	STRETCH TIME	DELAY TIME	SYSTEM LOOP	NEW CARD
2A	6X6	300	4	Y	2	Y	Y	-	-	-	-	Y
3A	6X40	0	2-4-2	Y	3	Y	Y	-	-	15	-	Y
					8	Y	Y	-	-	-	-	Y
4A	6X40	0	2-4-2	Y	4	Y	Y	-	-	-	-	Y
4B	6X40	0	2-4-2	Y	4	Y	Y	-	-	-	-	Y
4C	6X40	0	2-4-2	Y	4	Y	Y	-	-	-	-	Y
5A	6X40	0	2-4-2	Y	5	Y	Y	-	-	-	-	Y
5B	6X40	0	2-4-2	Y	5	Y	Y	-	-	-	-	Y
5C	6X40	0	2-4-2	Y	5	Y	Y	-	-	15	-	Y
6A	6X6	300	6	Y	6	Y	Y	-	-	-	-	-
6B	6X6	300	6	Y	6	Y	Y	-	-	-	-	-
6C	6X40	0	2-4-2	Y	6	Y	Y	Y	-	3	-	Y
8A	6X40	0	2-4-2	Y	8	Y	Y	-	-	-	-	Y
8B	6X40	0	2-4-2	Y	8	Y	Y	-	-	-	-	Y
8C	6X40	0	2-4-2	Y	8	Y	Y	-	-	15	-	Y
S9	6X6	+200	4	Y	-	-	-	-	-	-	Y	Y
S10	6X6	+200	4	Y	-	-	-	-	-	-	Y	Y
S11	6X6	+200	4	Y	-	-	-	-	-	-	Y	Y

4 Phase
Fully Actuated
NC 42 (East of Clayton)

NOTES

1. Refer to "Roadway Standard Drawings NCDOT" dated January 2018, "Standard Specifications for Roads and Structures" dated January 2018.
2. Do not program signal for late night flashing operation unless otherwise directed by the Engineer.
3. Phase 3 may be lagged.
4. Phase 5 may be lagged.
5. Set all detector units to presence mode.
6. Omit "WALK" and flashing "DON'T WALK" with no pedestrian calls.
7. Program pedestrian heads to countdown the flashing "Don't Walk" time only.
8. Pedestrian pedestals are conceptual and shown for reference only. See sheets P1-P3 for pushbutton location details.
9. Maximum times shown in timing chart are for free-run operation only. Coordinated signal system timing values supersede these values.
10. Closed loop system data:
    Master Asset #: 10411,
    Controller Asset #: 0874.

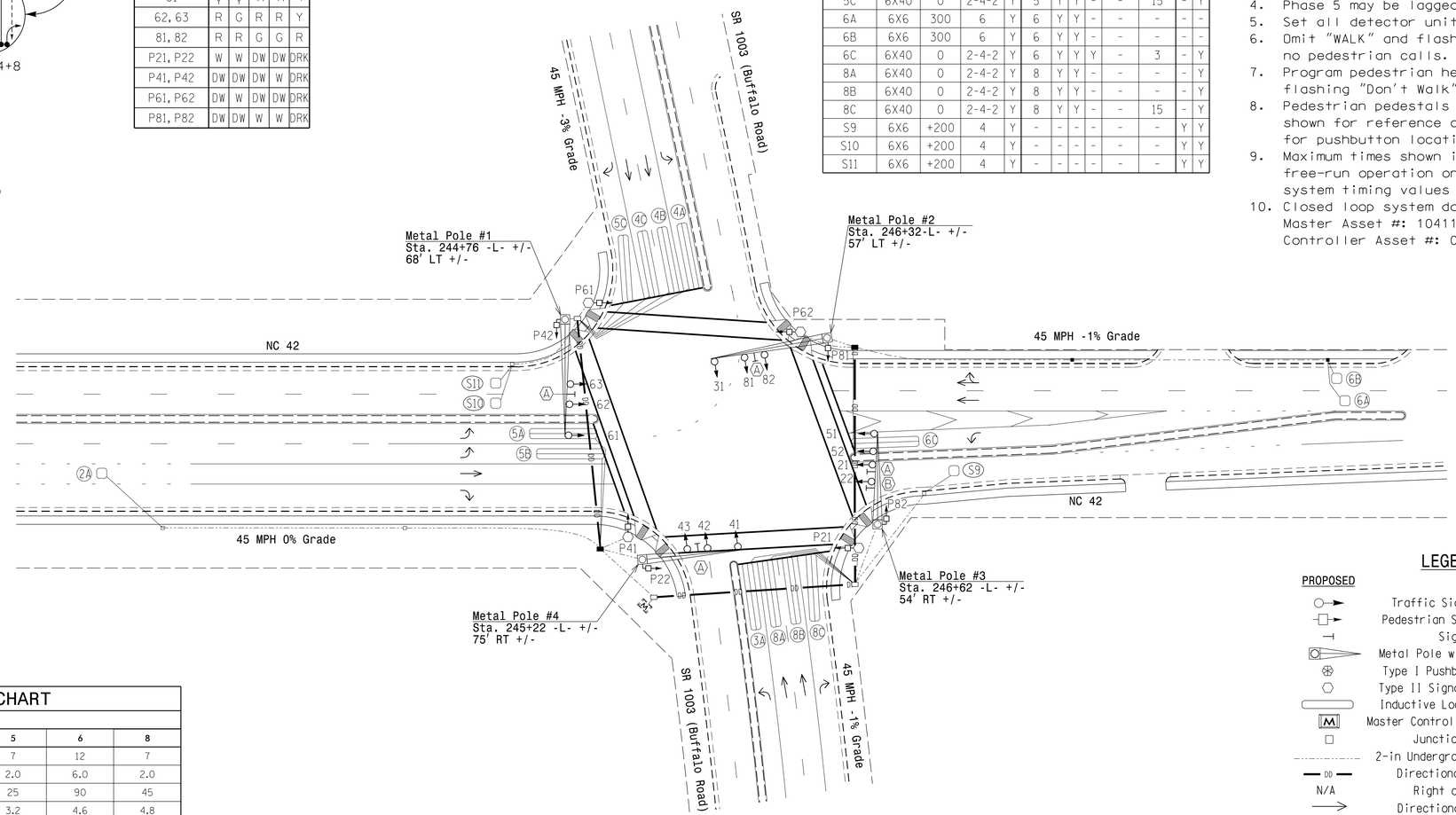

LEGEND

PROPOSED		EXISTING
○→	Traffic Signal Head	●→
□→	Pedestrian Signal Head	■→
⊣	Sign	⊣
	Metal Pole with Mastarm	
⊗	Type I Pushbutton Post	⊗
⬡	Type II Signal Pedestal	⬢
	Inductive Loop Detector	
M	Master Controller & Cabinet	M
□	Junction Box	■
	2-in Underground Conduit	
DD	Directional Drill	N/A
N/A	Right of Way	
→	Directional Arrow	→
Ⓐ	Street Name Sign (D3-1)	Ⓐ
Ⓑ	Right Arrow "ONLY" Sign (R3-5R)	Ⓑ

OASIS 2070 TIMING CHART

FEATURE	PHASE 2	3	4	5	6	8
Min Green 1 *	12	7	7	7	12	7
Extension 1 *	6.0	2.0	2.0	2.0	6.0	2.0
Max Green 1 *	90	25	45	25	90	45
Yellow Clearance	4.6	3.2	4.8	3.2	4.6	4.8
Red Clearance	2.1	3.3	2.3	3.0	2.1	2.3
Red Revert	2.0	2.0	2.0	2.0	2.0	2.0
Walk 1 *	5	-	5	-	5	5
Don't Walk 1	29	-	33	-	23	27
Seconds Per Actuation *	2.5	-	-	-	1.8	-
Max Variable Initial *	34	-	-	-	34	-
Time Before Reduction *	15	-	-	-	15	-
Time To Reduce *	30	-	-	-	30	-
Minimum Gap	3.0	-	-	-	3.0	-
Recall Mode	MIN RECALL	-	-	-	MIN RECALL	-
Vehicle Call Memory	YELLOW	-	-	-	YELLOW	-
Dual Entry	-	-	ON	-	-	ON
Simultaneous Gap	ON	ON	ON	ON	ON	ON

* These values may be field adjusted. Do not adjust Min Green and Extension times for phases 2 and 6 lower than what is shown. Min Green for all other phases should not be lower than 4 seconds.

Signal Upgrade - Final Design

Prepared by
URS
URS Corporation – North Carolina
1600 Perimeter Park Drive
Morrisville, North Carolina 27560
TELEPHONE (919) 461-1100 FAX (919) 461-1415
NC LICENSE • C-2243

Prepared for the Offices of:
Transportation Mobility and Safety Division
Signal Design Section
750 N.Greenfield Pkwy,Garner,NC 27529

NC 42
at
SR 1003 (Buffalo Road)

Division 4 Johnston County Clayton

PLAN DATE: January 2018	REVIEWED BY: C. L. Kalencik
PREPARED BY: S. W. Cox	REVIEWED BY:

SCALE 1"=40' (0 – 40)

REVISIONS	INIT.	DATE

DOCUMENT NOT CONSIDERED FINAL UNLESS ALL SIGNATURES COMPLETED

NORTH CAROLINA PROFESSIONAL SEAL 040715 ENGINEER COURTNEY L. KALENCIK

DocuSigned by: Courtney L. Kalencik 5/25/2018
9FE9158CE2864FE...

SIG. INVENTORY NO. 04-0874

5/25/2018
12:46:27 S:\Traffic\Signals\R3825B\Traffic\Signals\04-0874_sig_dsn_date.dgn
cokst

DocuSign Envelope ID: EDEA80FB-80A3-45F4-B6C8-CD80310DC6C8

PROJECT REFERENCE NO.	SHEET NO.
R-3825B	Sig. 18.1

EDI MODEL 2018ECL-NC CONFLICT MONITOR PROGRAMMING DETAIL

(remove jumpers and set switches as shown)

REMOVE DIODE JUMPERS 2-5, 2-6, 2-9, 2-13, 2-15, 3-8, 3-10, 3-12, 3-16, 4-8, 4-10, 4-12, 4-14, 4-16, 5-9, 5-13, 6-9, 6-13, 6-15, 8-10, 8-12, 8-14, 8-16, 9-13, 9-15, 10-12, 10-14, 10-16, 12-14, 12-16, 13-15 AND 14-16.

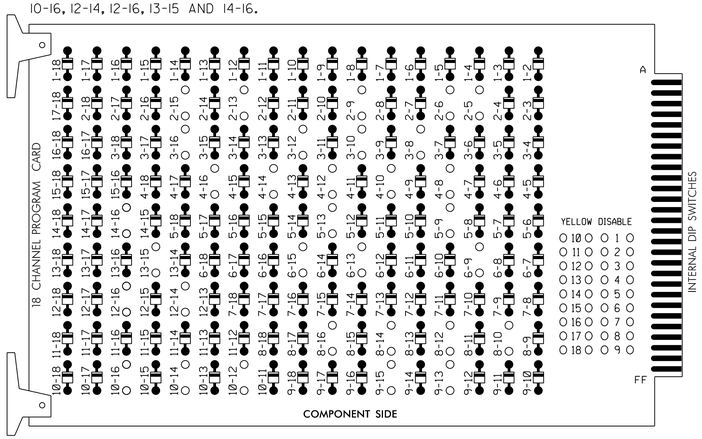

REMOVE JUMPERS AS SHOWN

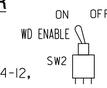

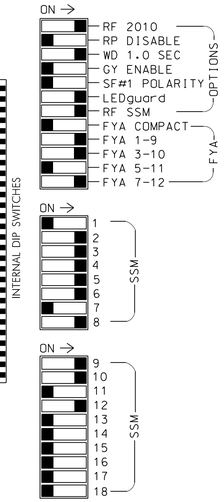

NOTES:

1. Card is provided with all diode jumpers in place. Removal of any jumper allows its channels to run concurrently.
2. Ensure jumpers SEL2-SEL5 and SEL9 are present on the monitor board.
3. Ensure that Red Enable is active at all times during normal operation.
4. Connect serial cable from conflict monitor to comm. port 1 of 2070 controller. Ensure conflict monitor communicates with 2070.

NOTES

1. To prevent "flash-conflict" problems, insert red flash program blocks for all unused vehicle load switches in the output file. The installer shall verify that signal heads flash in accordance with the Signal Plans.
2. Program phases 4 and 8 for Dual Entry.
3. Enable Simultaneous Gap-Out for all Phases.
4. Program phases 2 and 6 for Variable Initial and Gap Reduction.
5. Program phases 2 and 6 for Startup In Green.
6. Program phases 2, 4, 6, and 8 for Startup Ped Call.
7. Program phases 2 and 6 for Yellow Flash, and overlaps 1 and 2 as Wag Overlaps.
8. The cabinet and controller are part of the NC 42 (East of Clayton) Closed Loop System.

EQUIPMENT INFORMATION

CONTROLLER.....2070
CABINET.....332 W/ AUX
SOFTWARE.....ECONOLITE OASIS
CABINET MOUNT.....BASE
OUTPUT FILE POSITIONS...18 WITH AUX. OUTPUT FILE
LOAD SWITCHES USED.....S2,S3,S4,S5,S6,S7,S8,S9,S11,S12
AUX S1,AUX S2,AUX S5
PHASES USED.....2,3,4,5,6,8,2PED,4PED,6PED,
8PED
OVERLAP "A".....2
OVERLAP "B".....3+4
OVERLAP "C".....NOT USED
OVERLAP "D".....8

SIGNAL HEAD HOOK-UP CHART

LOAD SWITCH NO.	S1	S2	S3	S4		S5	S6	S7		S8	S9	S10	S11	S12	AUX S1	AUX S2	AUX S3	AUX S4	AUX S5	AUX S6
CMU CHANNEL NO.	1	2	13	3		4	14	5		6	15	7	8	16	9	10	17	11	12	18
PHASE	1	2	2 PED	3		4	4 PED	5		6	6 PED	7	8	8 PED	OLA	OLB	SPARE	OLC	OLD	SPARE
SIGNAL HEAD NO.	NU	21.22	P21, P22	22	31★	42.43	P41, P42	43	51.52	62.63	P61, P62	NU	81.82	P81, P82	61★	31★	NU	NU	41★	NU
RED		128			✳	101				134			107							
YELLOW		129				102				135			108							
GREEN		130				103				136			109							
RED ARROW									131						A121	A124			A101	
YELLOW ARROW				117				132	132						A122	A125			A102	
FLASHING YELLOW ARROW															A123	A126			A103	
GREEN ARROW				118	118			133	133											
✋			113				104				119			110						
🚶			115				106				121			112						

NU = Not Used

✳ Denotes install load resistor. See load resistor installation detail this sheet.

★ See pictorial of head wiring in detail below.

INPUT FILE POSITION LAYOUT

(front view)

	1	2	3	4	5	6	7	8	9	10	11	12	13	14
FILE "I" U	SLOT	Ø2	SLOT	SLOT	Ø3	Ø4	Ø4	SLOT	SYS. DET.	SLOT	SLOT	Ø2 PED	Ø6 PED	FS
		2A			3A	4A	4C		S9			DC ISOLATOR	DC ISOLATOR	DC ISOLATOR
FILE "I" L	EMPTY	NOT USED	EMPTY	EMPTY	NOT USED	Ø4 4B	NOT USED	EMPTY	SYS. DET. S10	EMPTY	EMPTY	Ø4 PED DC ISOLATOR	Ø8 PED DC ISOLATOR	ST DC ISOLATOR
FILE "J" U	Ø5	Ø6	Ø6	SLOT	SLOT	Ø8	Ø8	WIRED INPUT ⊗	SYS. DET.	SLOT	SLOT	SLOT	SLOT	SLOT
	5A	6A	6C			8A	8C		S11					
FILE "J" L	Ø5 5B	Ø6 6B	Ø5 5C	EMPTY	EMPTY	Ø8 8B	NOT USED		NOT USED	EMPTY	EMPTY	EMPTY	EMPTY	EMPTY

EX.: 1A, 2A, ETC. = LOOP NO.'S

FS = FLASH SENSE
ST = STOP TIME

⊗ Wired Input - Do not populate slot with detector card

INPUT FILE CONNECTION & PROGRAMMING CHART

LOOP NO.	LOOP TERMINAL	INPUT FILE POS.	PIN NO.	INPUT ASSIGNMENT NO.	DETECTOR NO.	NEMA PHASE	CALL	EXTEND	FULL TIME DELAY	STRETCH TIME	DELAY TIME
2A	TB2-5,6	I2U	39	1	2	2	Y	Y			
3A[1]	TB4-5,6	I5U	58	20	3	3	Y	Y			15
	-	J8U	50	12	28	8	Y	Y			
4A	TB4-9,10	I6U	41	3	4	4	Y	Y			
4B	TB4-11,12	I6L	45	7	14	4	Y	Y			
4C	TB6-1,2	I7U	65	27	34	4	Y	Y			
✳ S9	TB6-9,10	I9U	60	22	11	SYS					
✳ S10	TB6-11,12	I9L	62	24	13	SYS					
5A	TB3-1,2	J1U	55	17	5	5	Y	Y			
5B	TB3-3,4	J1L	55	17	5	5	Y	Y			
6A	TB3-5,6	J2U	40	2	6	6	Y	Y			
6B	TB3-7,8	J2L	44	6	16	6	Y	Y			
6C	TB3-9,10	J3U	64	26	36	6	Y	Y	Y		3
5C	TB3-11,12	J3L	77	39	46	5	Y	Y			15
8A	TB5-9,10	J6U	42	4	8	8	Y	Y			
8B	TB5-11,12	J6L	46	8	18	8	Y	Y			
8C	TB7-1,2	J7U	66	28	38	8	Y	Y			15
✳ S11	TB7-9,10	J9U	59	21	15	SYS					
PED PUSH BUTTONS											
P21,P22	TB8-4,6	I12U	67	29	PED 2	2 PED					
P41,P42	TB8-5,6	I12L	69	31	PED 4	4 PED					
P61,P62	TB8-7,9	I13U	68	30	PED 6	6 PED					
P81,P82	TB8-8,9	I13L	70	32	PED 8	8 PED					

NOTE:
INSTALL DC ISOLATORS IN INPUT FILE SLOTS I12 AND I13.

[1] Add jumper from I5-W to J8-W, on rear of input file.

✳ System detector only. Remove the vehicle phase assigned to this detector in the default programming.

INPUT FILE POSITION LEGEND: J2L
FILE J
SLOT 2
LOWER

FYA SIGNAL WIRING DETAIL

(wire signal heads as shown)

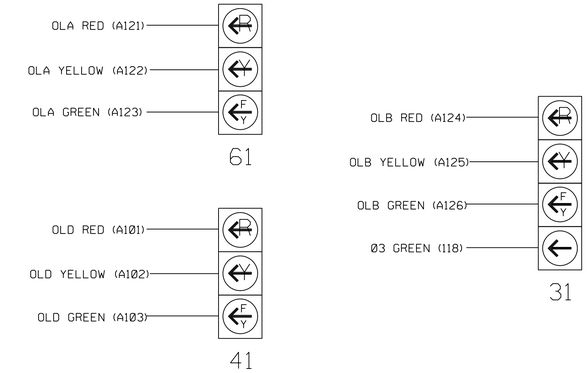

NOTE

The sequence display for signal head 31 requires special logic programming. See sheet 2 for programming instructions.

THIS ELECTRICAL DETAIL IS FOR
THE SIGNAL DESIGN: 04-0874
DESIGNED: January 2018
SEALED: 5/25/2018
REVISED: N/A

LOAD RESISTOR INSTALLATION DETAIL

(remove and install resistors as shown below)

ACCEPTABLE VALUES

VALUE (ohms)	WATTAGE
1.5K - 1.9K	25W (min)
2.0K - 3.0K	10W (min)

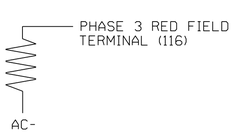

Final Design
Electrical Detail - Sheet 1 of 2

DOCUMENT NOT CONSIDERED FINAL UNLESS ALL SIGNATURES COMPLETED

ELECTRICAL AND PROGRAMMING DETAILS FOR:

Prepared for the Offices of:
Transportation Mobility and Safety Division
Traffic Engineering Branch
Signal Management Section
DEPARTMENT OF TRANSPORTATION
750 N.Greenfield Pkwy,Garner,NC 27529

NC 42 at SR 1003 (Buffalo Road)

Division 4 Johnston County Clayton

PLAN DATE: January 2018	REVIEWED BY: J O Deaton		
PREPARED BY: M W Yalch	REVIEWED BY:		
REVISIONS		INIT.	DATE

NORTH CAROLINA PROFESSIONAL SEAL 07438 ENGINEER JAMES O. DEATON

DocuSigned by: James O Deaton 5/25/2018 40FF8AC430BD40F...

SIG. INVENTORY NO. 04-0874

Prepared by
URS
URS Corporation – North Carolina
1600 Perimeter Park Drive
Morrisville, North Carolina 27560
TELEPHONE (919) 461-1100 FAX (919) 461-1415
NC LICENSE • C-2243

5/25/2018
L:\Work\Raleigh\Jobs\R3825B\Traffic\Signals\Electricals\04-0874fe-00-192.dgn
coxsl

DocuSign Envelope ID: EDEA80FB-80A3-45F4-B6C8-CD80310DC6C8

PROJECT REFERENCE NO.	SHEET NO.
R-3825B	Sig. 18.2

LOGICAL I/O PROCESSOR PROGRAMMING DETAIL
TO PRODUCE SPECIAL FYA-PPLT SIGNAL SEQUENCE

(program controller as shown below)

1. FROM MAIN MENU PRESS '2' (PHASE CONTROL), THEN '1' (PHASE CONTROL FUNCTIONS). SCROLL TO THE BOTTOM OF THE MENU AND ENABLE ACT LOGIC COMMANDS 1, 2 AND 3.

2. FROM MAIN MENU PRESS '6' (OUTPUTS), THEN '3' (LOGICAL I/O PROCESSOR).

```
LOGICAL I/O COMMAND #1  (+/-COMMAND#)
IF  ACTIVE PHASE       #3  IS ON
AND RED CLEAR ON PHASE #3  IS ON

                 SCROLL DOWN

THEN:
SET OUTPUT  ASSIGNMENT #47 ON
SET OUTPUT  ASSIGNMENT #48 OFF
```

NOTE: LOGIC FOR PHASE 3 RED CLEAR WHEN TRANSITIONING FROM PHASE 3 TO PHASE 4 (HEAD 31).

PRESS '+'

```
LOGICAL I/O COMMAND #2  (+/-COMMAND#)
IF  ACTIVE PHASE       #3  IS ON

                 SCROLL DOWN

THEN:
SET OUTPUT  ASSIGNMENT #49 OFF
```

NOTE: LOGIC FOR SWITCHING FLASHING YELLOW ARROW "OFF" DURING PHASE 3 (HEAD 31).

PRESS '+'

```
LOGICAL I/O COMMAND #3  (+/-COMMAND#)
IF  YELLOW ON PHASE    #3  IS ON

                 SCROLL DOWN

THEN:
SET OUTPUT  ASSIGNMENT #48 ON
```

NOTE: LOGIC FOR YELLOW ARROW CLEARANCE FROM PHASE 3 (HEAD 31).

LOGIC I/O PROCESSOR PROGRAMMING COMPLETE

OUTPUT REFERENCE SCHEDULE

USE TO INTERPRET LOGIC PROCESSOR

OUTPUT 47 = Overlap B Red
OUTPUT 48 = Overlap B Yellow
OUTPUT 49 = Overlap B Green

COUNTDOWN PEDESTRIAN SIGNAL OPERATION

Countdown Ped Signals are required to display timing only during Ped Clearance Interval. Consult Ped Signal Module user's manual for instructions on selecting this feature.

OVERLAP PROGRAMMING DETAIL

(program controller as shown below)

FROM MAIN MENU PRESS '8' (OVERLAPS), THEN '1' (VEHICLE OVERLAP SETTINGS).

```
PAGE 1: VEHICLE OVERLAP 'A' SETTINGS
PHASE:          ¦123456789101112131415 16
VEH OVL PARENTS:¦ X
VEH OVL NOT VEH:¦
VEH OVL NOT PED:¦
VEH OVL GRN EXT:¦
STARTUP COLOR: _ RED  _ YELLOW  _ GREEN
FLASH COLORS:  _ RED  _ YELLOW  X GREEN
SELECT VEHICLE OVERLAP OPTIONS:   (Y/N)
FLASH YELLOW IN CONTROLLER FLASH?...Y
GREEN EXTENSION (0-255 SEC).........0
YELLOW CLEAR (0=PARENT,3-25.5 SEC)..0.0
RED CLEAR (0=PARENT,0.1-25.5 SEC)...0.0
OUTPUT AS PHASE # (0=NONE, 1-16)....0
```

← NOTICE GREEN FLASH

PRESS '+'

```
PAGE 1: VEHICLE OVERLAP 'B' SETTINGS
PHASE:          ¦123456789101112131415 16
VEH OVL PARENTS:¦   XX
VEH OVL NOT VEH:¦
VEH OVL NOT PED:¦
VEH OVL GRN EXT:¦
STARTUP COLOR: _ RED  _ YELLOW  _ GREEN
FLASH COLORS:  _ RED  _ YELLOW  X GREEN
SELECT VEHICLE OVERLAP OPTIONS:   (Y/N)
FLASH YELLOW IN CONTROLLER FLASH?...N
GREEN EXTENSION (0-255 SEC).........0
YELLOW CLEAR (0=PARENT,3-25.5 SEC)..0.0
RED CLEAR (0=PARENT,0.1-25.5 SEC)...0.0
OUTPUT AS PHASE # (0=NONE, 1-16)....0
```

← NOTICE GREEN FLASH

PRESS '+' TWICE

```
PAGE 1: VEHICLE OVERLAP 'D' SETTINGS
PHASE:          ¦123456789101112131415 16
VEH OVL PARENTS:¦       X
VEH OVL NOT VEH:¦
VEH OVL NOT PED:¦
VEH OVL GRN EXT:¦
STARTUP COLOR: _ RED  _ YELLOW  _ GREEN
FLASH COLORS:  _ RED  _ YELLOW  X GREEN
SELECT VEHICLE OVERLAP OPTIONS:   (Y/N)
FLASH YELLOW IN CONTROLLER FLASH?...N
GREEN EXTENSION (0-255 SEC).........0
YELLOW CLEAR (0=PARENT,3-25.5 SEC)..0.0
RED CLEAR (0=PARENT,0.1-25.5 SEC)...0.0
OUTPUT AS PHASE # (0=NONE, 1-16)....0
```

← NOTICE GREEN FLASH

OVERLAP PROGRAMMING COMPLETE

FLASHER CIRCUIT MODIFICATION DETAIL

IN ORDER TO INSURE THAT SIGNALS FLASH CONCURRENTLY ON THE SAME APPROACH, MAKE THE FOLLOWING FLASHER CIRCUIT CHANGES:

1. ON REAR OF PDA - REMOVE WIRE FROM TERM. T2-4 AND TERMINATE ON T2-2.
2. ON REAR OF PDA - REMOVE WIRE FROM TERM. T2-5 AND TERMINATE ON T2-3.
3. REMOVE FLASHER UNIT 2.

THE CHANGES LISTED ABOVE TIES ALL PHASES AND OVERLAPS TO FLASHER UNIT 1.

THIS ELECTRICAL DETAIL IS FOR
THE SIGNAL DESIGN: 04-0874
DESIGNED: January 2018
SEALED: 5/25/2018
REVISED: N/A

Final Design
Electrical Detail - Sheet 2 of 2

DOCUMENT NOT CONSIDERED FINAL UNLESS ALL SIGNATURES COMPLETED

Prepared by
URS
URS Corporation – North Carolina
1600 Perimeter Park Drive
Morrisville, North Carolina 27560
TELEPHONE (919) 461-1100 FAX (919) 461-1415
NC LICENSE • C-2243

ELECTRICAL AND PROGRAMMING DETAILS FOR:

Prepared for the Offices of:
Traffic Engineering, Mobility and Safety Division
Signals Management Section
750 N.Greenfield Pkwy, Garner, NC 27529

NC 42
at
SR 1003 (Buffalo Road)

Division 4 Johnston County Clayton

PLAN DATE:	January 2018	REVIEWED BY:	J O Deaton
PREPARED BY:	M W Yalch	REVIEWED BY:	

REVISIONS	INIT.	DATE

NORTH CAROLINA PROFESSIONAL SEAL 07438 ENGINEER JAMES O. DEATON

DocuSigned by: James O Deaton 5/25/2018
40FFBAC430BD40F...

SIG. INVENTORY NO. 04-0874

5/25/2018
L:\MWorf\Sville\Jobs\R3825B\Traffic\Signals\Electricals\04-0874fe-00-192.dgn
coxst

DocuSign Envelope ID: EDEA80FB-80A3-45F4-B6C8-CD80310DC6C8

METAL POLE No. 1 and 2

PROJECT REFERENCE NO.	SHEET NO.
R-3825B	Sig.18.3

Design Loading for METAL POLE NO. 1

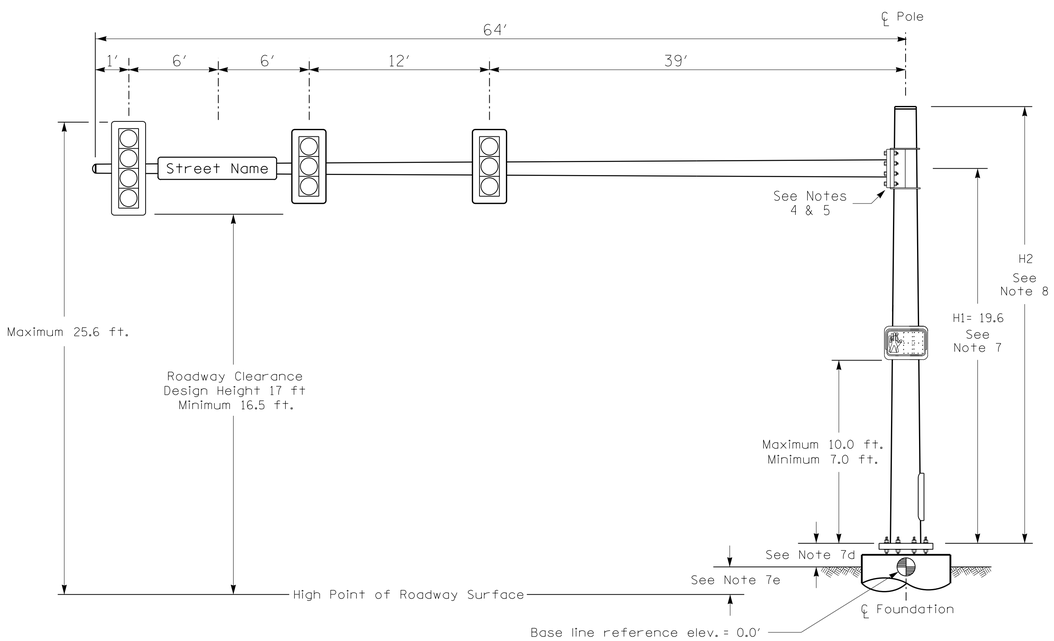

Elevation View

Design Loading for METAL POLE NO. 2

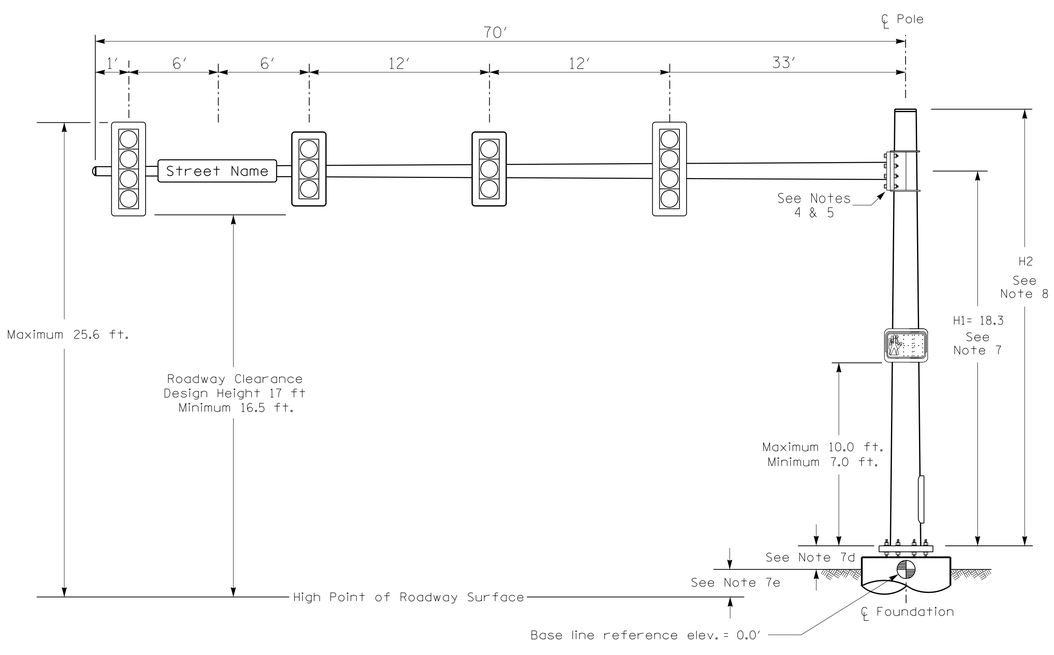

Elevation View

SPECIAL NOTE

The contractor is responsible for verifying that the mast arm attachment height (H1) will provide the "Design Height" clearance from the roadway before submitting final shop drawings for approval. Verify elevation data below which was obtained by field measurement or from available project survey data.

Elevation Data for Mast Arm Attachment (H1)

Elevation Differences for:	Pole 1	Pole 2
Baseline reference point at ℄ Foundation @ ground level	0.0 ft.	0.0 ft.
Elevation difference at High point of roadway surface	+0.5 ft.	-0.8 ft.
Elevation difference at Edge of travelway or face of curb	-0.5 ft.	-0.9 ft.

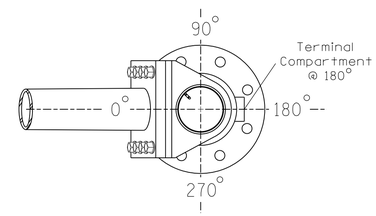

POLE RADIAL ORIENTATION

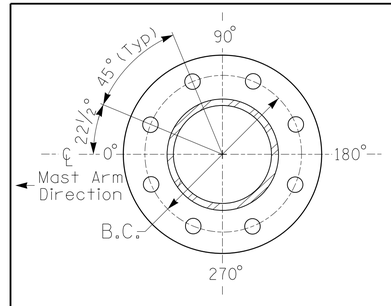

8 BOLT BASE PLATE DETAIL

See Note 6

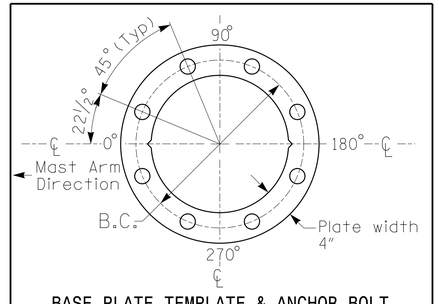

BASE PLATE TEMPLATE & ANCHOR BOLT LOCK PLATE DETAIL

For 8 Bolt Base Plate

MAST ARM LOADING SCHEDULE

LOADING SYMBOL	DESCRIPTION	AREA	SIZE	WEIGHT
	RIGID MOUNTED SIGNAL HEAD 12″-4 SECTION-WITH BACKPLATE	11.5 S.F.	25.5″ W X 66.0″ L	74 LBS
	RIGID MOUNTED SIGNAL HEAD 12″-3 SECTION-WITH BACKPLATE	9.3 S.F.	25.5″ W X 52.5″ L	60 LBS
	RIGID MOUNTED SIGNAL HEAD 12″-5 SECTION-WITH BACKPLATE	16.3 S.F.	42.0″ W X 56.0″ L	103 LBS
	PEDESTRIAN SIGNAL HEAD WITH MOUNTING HARDWARE	2.2 S.F.	18.5″ W X 17.0″ L	21 LBS
Street Name	STREET NAME SIGN RIGID MOUNTED	16.0 S.F.	24.0″ W X 96.0″ L	36 LBS

NOTES

DESIGN REFERENCE MATERIAL

1. Design the traffic signal structure and foundation in accordance with:
   - The 6th Edition 2013 AASHTO "Standard Specifications for Structural Supports for Highway Signs, Luminaires, and Traffic Signals, including all of the latest interim revisions.
   - The 2018 NCDOT "Standard Specifications for Roads and Structures." The latest addenda to the specifications can be found in the traffic signal project special provisions.
   - The 2018 NCDOT Roadway Standard Drawings.
   - The traffic signal project plans and special provisions.
   - The NCDOT "Metal Pole Standards" located at the following NCDOT website: https://connect.ncdot.gov/resources/safety/Pages/ITS-Design-Resources.aspx

DESIGN REQUIREMENTS

2. Design the traffic signal structure using the loading conditions shown in the elevation views. These are anticipated worst case "design loads" and may not represent the actual loads that will be applied at the time of the installation. The contractor should refer to the traffic signal plans for the actual loads that will be applied at the time of the installation.
3. Design all signal supports using stress ratios that do not exceed 0.9.
4. The camber design for the mast arm deflection should provide an appearance of a low pitched arch where the tip or the free end of the mast arm does not deflect below horizontal when fully loaded.
5. A clamp-type bolted mast arm-to-pole connection may be used instead of the welded ring stiffened box connection shown as long as the connection meets all of the design requirements.
6. Design base plate with 8 anchor bolt holes. Provide 2 inch x 60 inch anchor bolts.
7. The mast arm attachment height (H1) shown is based on the following design assumptions:
   a. Mast arm slope and deflection are not considered in determining the arm attachment height as they are assumed to offset each other.
   b. Signal heads are rigidly mounted and vertically centered on the mast arm.
   c. The roadway clearance height for design is as shown in the elevation views.
   d. The top of the pole base plate is 0.75 feet above the ground elevation.
   e. Refer to the Elevation Data Chart for the elevation differences between the proposed foundation ground level and the high point of the roadway.
8. The pole manufacturer will determine the total height (H2) of each pole using the greater of the following:
   - Mast arm attachment height (H1) plus 2 feet, or
   - H1 plus 1/2 of the total height of the mast arm attachment assembly plus 1 foot.
9. If pole location adjustments are required, the contractor must gain approval from the Engineer as this may affect the mast arm lengths and arm attachment heights. The contractor may contact the Signal Design Section Senior Structural Engineer for assistance at (919) 814-5000.
10. The contractor is responsible for verifying that the mast arm length shown will allow proper positioning of the signal heads over the roadway.
11. The contractor is responsible for providing soil penetration testing data (SPT) to the pole manufacturer so site specific foundations can be designed.

All metal poles and arms should be black in color as specified in the project special provisions.

Prepared by
URS
URS Corporation – North Carolina
1600 Perimeter Park Drive
Morrisville, North Carolina 27560
TELEPHONE (919) 461-1100 FAX (919) 461-1415
NC LICENSE • C-3243

NCDOT Wind Zone 3 (110 mph)

DOCUMENT NOT CONSIDERED FINAL UNLESS ALL SIGNATURES COMPLETED

Prepared for the Offices of:
Transportation Mobility and Safety Division
STATE OF NORTH CAROLINA DEPARTMENT OF TRANSPORTATION
Signal Design Section
750 N.Greenfield Pkwy,Garner,NC 27529

NC 42
at
SR 1003 (Buffalo Road)

Division 4 Johnston County Clayton

PLAN DATE:	January 2018	REVIEWED BY:	C. L. Kalencik
PREPARED BY:	S. W. Cox	REVIEWED BY:	

SCALE 0 N/A N/A

REVISIONS	INIT.	DATE

NORTH CAROLINA PROFESSIONAL SEAL 040715 ENGINEER COURTNEY L. KALENCIK

DocuSigned by: Courtney L. Kalencik 5/25/2018
0FE9158CE2964FE...

SIG. INVENTORY NO. 04-0874

5/25/2018
L:\Workfiles\Projects\R3825B\Traffic\Signals\040874_sig_mt&m2_date.dgn
COXSI

DocuSign Envelope ID: EDEA80FB-80A3-45F4-B6C8-CD80310DC6C8

METAL POLE No. 3 and 4

PROJECT REFERENCE NO.	SHEET NO.
R-3825B	Sig.18.4

Design Loading for METAL POLE NO. 3

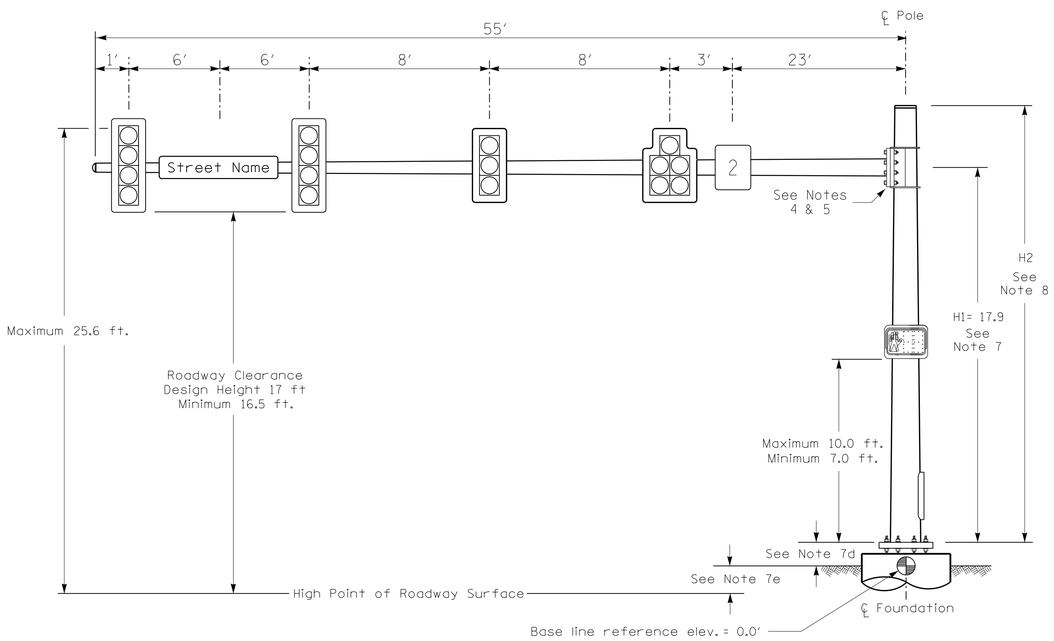

Elevation View

Design Loading for METAL POLE NO. 4

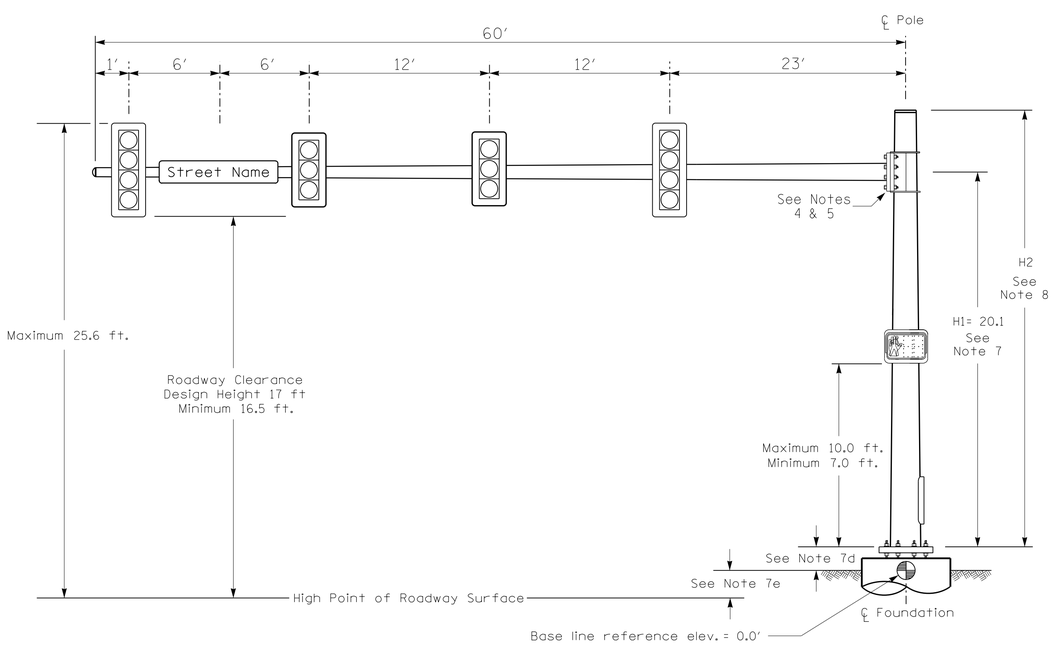

Elevation View

SPECIAL NOTE

The contractor is responsible for verifying that the mast arm attachment height (H1) will provide the "Design Height" clearance from the roadway before submitting final shop drawings for approval. Verify elevation data below which was obtained by field measurement or from available project survey data.

Elevation Data for Mast Arm Attachment (H1)

Elevation Differences for:	Pole 3	Pole 4
Baseline reference point at ℄ Foundation @ ground level	0.0 ft.	0.0 ft.
Elevation difference at High point of roadway surface	-1.1 ft.	+1.1 ft.
Elevation difference at Edge of travelway or face of curb	-2.3 ft.	+0.7 ft.

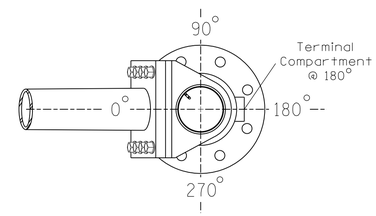

POLE RADIAL ORIENTATION

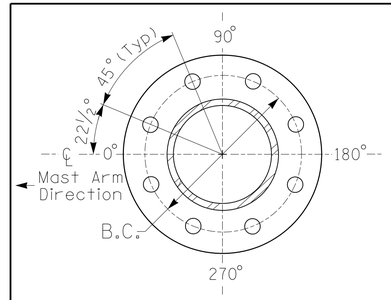

8 BOLT BASE PLATE DETAIL

See Note 6

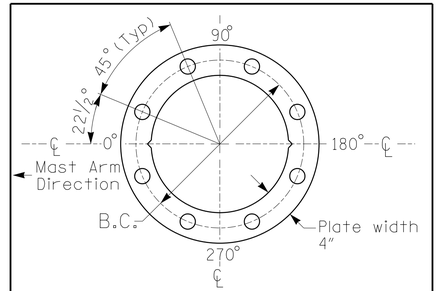

BASE PLATE TEMPLATE & ANCHOR BOLT LOCK PLATE DETAIL

For 8 Bolt Base Plate

MAST ARM LOADING SCHEDULE

LOADING SYMBOL	DESCRIPTION	AREA	SIZE	WEIGHT
	RIGID MOUNTED SIGNAL HEAD 12″-3 SECTION-WITH BACKPLATE	9.3 S.F.	25.5″W X 52.5″L	60 LBS
	RIGID MOUNTED SIGNAL HEAD 12″-4 SECTION-WITH BACKPLATE	11.5 S.F.	25.5″W X 66.0″L	74 LBS
	RIGID MOUNTED SIGNAL HEAD 12″-5 SECTION-WITH BACKPLATE	16.3 S.F.	42.0″W X 56.0″L	103 LBS
	PEDESTRIAN SIGNAL HEAD WITH MOUNTING HARDWARE	2.2 S.F.	18.5″W X 17.0″L	21 LBS
2	SIGN RIGID MOUNTED	7.5 S.F.	30.0″W X 36.0″L	14 LBS
Street Name	STREET NAME SIGN RIGID MOUNTED	16.0 S.F.	24.0″W X 96.0″L	36 LBS

NOTES

DESIGN REFERENCE MATERIAL

1. Design the traffic signal structure and foundation in accordance with:
   - The 6th Edition 2013 AASHTO "Standard Specifications for Structural Supports for Highway Signs, Luminaires, and Traffic Signals, including all of the latest interim revisions.
   - The 2018 NCDOT "Standard Specifications for Roads and Structures." The latest addenda to the specifications can be found in the traffic signal project special provisions.
   - The 2018 NCDOT Roadway Standard Drawings.
   - The traffic signal project plans and special provisions.
   - The NCDOT "Metal Pole Standards" located at the following NCDOT website: https://connect.ncdot.gov/resources/safety/Pages/ITS-Design-Resources.aspx

DESIGN REQUIREMENTS

2. Design the traffic signal structure using the loading conditions shown in the elevation views. These are anticipated worst case "design loads" and may not represent the actual loads that will be applied at the time of the installation. The contractor should refer to the traffic signal plans for the actual loads that will be applied at the time of the installation.
3. Design all signal supports using stress ratios that do not exceed 0.9.
4. The camber design for the mast arm deflection should provide an appearance of a low pitched arch where the tip or the free end of the mast arm does not deflect below horizontal when fully loaded.
5. A clamp-type bolted mast arm-to-pole connection may be used instead of the welded ring stiffened box connection shown as long as the connection meets all of the design requirements.
6. Design base plate with 8 anchor bolt holes. Provide 2 inch x 60 inch anchor bolts.
7. The mast arm attachment height (H1) shown is based on the following design assumptions:
   a. Mast arm slope and deflection are not considered in determining the arm attachment height as they are assumed to offset each other.
   b. Signal heads are rigidly mounted and vertically centered on the mast arm.
   c. The roadway clearance height for design is as shown in the elevation views.
   d. The top of the pole base plate is 0.75 feet above the ground elevation.
   e. Refer to the Elevation Data Chart for the elevation differences between the proposed foundation ground level and the high point of the roadway.
8. The pole manufacturer will determine the total height (H2) of each pole using the greater of the following:
   - Mast arm attachment height (H1) plus 2 feet, or
   - H1 plus 1/2 of the total height of the mast arm attachment assembly plus 1 foot.
9. If pole location adjustments are required, the contractor must gain approval from the Engineer as this may affect the mast arm lengths and arm attachment heights. The contractor may contact the Signal Design Section Senior Structural Engineer for assistance at (919) 814-5000.
10. The contractor is responsible for verifying that the mast arm length shown will allow proper positioning of the signal heads over the roadway.
11. The contractor is responsible for providing soil penetration testing data (SPT) to the pole manufacturer so site specific foundations can be designed.

All metal poles and arms should be black in color as specified in the project special provisions.

Prepared by
URS
URS Corporation – North Carolina
1600 Perimeter Park Drive
Morrisville, North Carolina 27560
TELEPHONE (919) 461-1100 FAX (919) 461-1415
NC LICENSE • C-2243

NCDOT Wind Zone 3 (110 mph)

DOCUMENT NOT CONSIDERED FINAL UNLESS ALL SIGNATURES COMPLETED

Prepared for the Offices of:
Transportation Mobility and Safety Division
STATE OF NORTH CAROLINA DEPARTMENT OF TRANSPORTATION
Signal Design Section
750 N.Greenfield Pkwy,Garner,NC 27529

NC 42
at
SR 1003 (Buffalo Road)

Division 4 Johnston County Clayton

PLAN DATE: January 2018	REVIEWED BY: C. L. Kalencik
PREPARED BY: S. W. Cox	REVIEWED BY:

SCALE 0 N/A N/A

REVISIONS	INIT.	DATE

NORTH CAROLINA PROFESSIONAL SEAL 040715 ENGINEER COURTNEY L. KALENCIK

DocuSigned by: Courtney L. Kalencik 5/25/2018
0FE815BCE2B64FE...

SIG. INVENTORY NO. 04-0874

5/25/2018
L:\Projects\Ill\Jobs\R3825B\Traffic\Signals\04-0874_sig_m3&m4_date.dgn
COKST

DocuSign Envelope ID: EDEA80FB-80A3-45F4-B6C8-CD80310DC6C8

NCDOT METAL POLE STANDARDS

PROJECT I.D. NO.	SHEET NO.
R-3825B	Sig.M1

STATE OF NORTH CAROLINA
DIVISION OF HIGHWAYS

STANDARD DRAWINGS FOR ALL METAL POLES

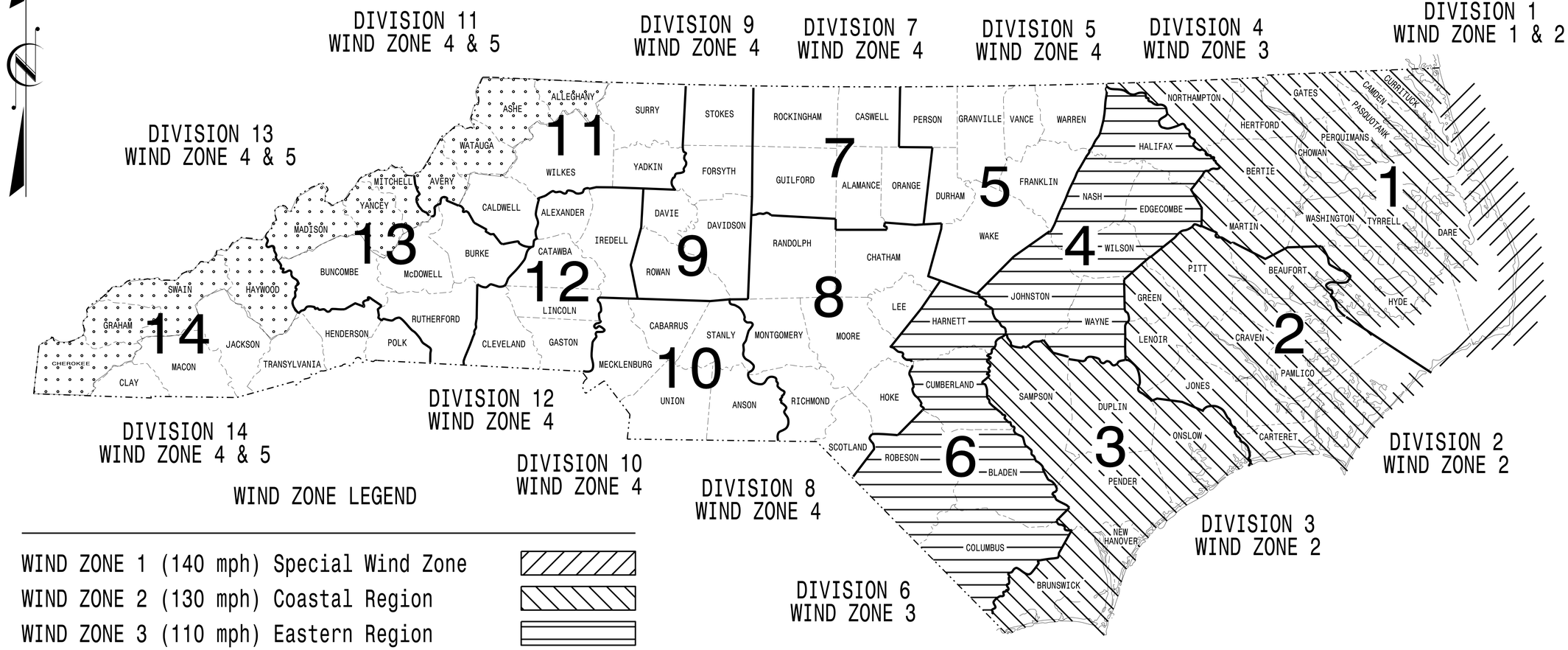

WIND ZONE LEGEND

WIND ZONE 1 (140 mph) Special Wind Zone	
WIND ZONE 2 (130 mph) Coastal Region	
WIND ZONE 3 (110 mph) Eastern Region	
WIND ZONE 4 (90 mph) Central & Mtn. Region	
WIND ZONE 5 (120 mph) Special Wind Zone	

https://connect.ncdot.gov/resources/safety/Pages/ITS-Design-Resources.aspx

Prepared in the Offices of:

Transportation Mobility and Safety Division
STATE OF NORTH CAROLINA DEPARTMENT OF TRANSPORTATION
Signal Design Section

750 N.Greenfield Pkwy.
Garner,NC 27529

Designed in conformance with the latest 2015 Interim to the 6th Edition 2013

AASHTO

Standard Specifications for Structural Supports for Highway Signs, Luminaires, and Traffic Signals

INDEX OF PLANS

DRAWING NUMBER	DESCRIPTION
Sig. M 1	Statewide Wind Zone Map
Sig. M 2	Typical Fabrication Details–All Metal Poles
Sig. M 3	Typical Fabrication Details–Strain Poles
Sig. M 4	Typical Fabrication Details–Mast Arm Poles
Sig. M 5	Typical Fabrication Details–Mast Arm Connection
Sig. M 6	Typical Fabrication Details–Strain Pole Attachments
Sig. M 7	Construction Details–Foundations
Sig. M 8	Standard Strain Pole Foundation–All Soil Conditions

NCDOT CONTACTS:

MOBILITY AND SAFETY DIVISION – ITS AND SIGNALS UNIT

M.M. MCDIARMID, P.E. – STATE ITS AND SIGNALS ENGINEER

J. P. GALLOWAY, P.E. – STATE SIGNALS ENGINEER

D.C. SARKAR, P.E. – ITS AND SIGNALS SENIOR STRUCTURAL ENGINEER

SEAL

NORTH CAROLINA PROFESSIONAL SEAL 028094 ENGINEER DEBESH C. SARKAR

DocuSigned by: Debesh C. Sarkar 44EBE3C3... SIGNATURE

10/11/2017 DATE

DocuSign Envelope ID: EDEA80FB-80A3-45F4-B6C8-CD80310DC6C8

PROJECT ID. NO.	SHEET NO.
R-3825B	Sig.M2

Fabrication Details – All Metal Poles

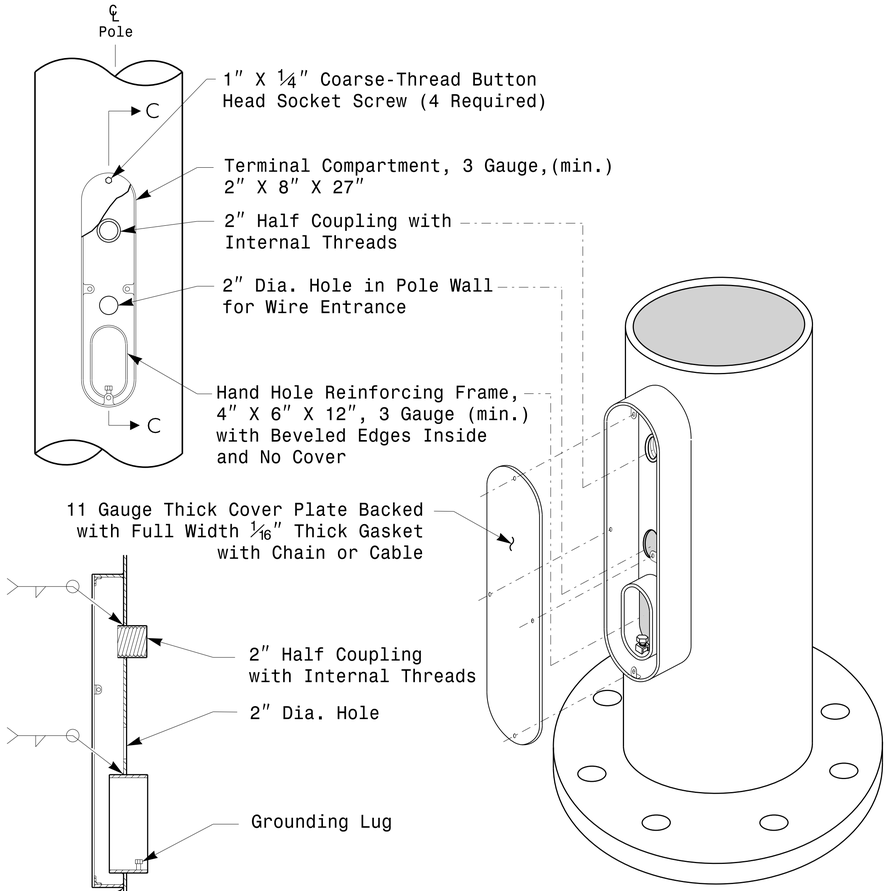

Section C-C

Note: Unless otherwise specified, locate Terminal Compartment 1 foot above the pole base plate at 180 degrees on the pole's radial index.

Terminal Compartment Detail

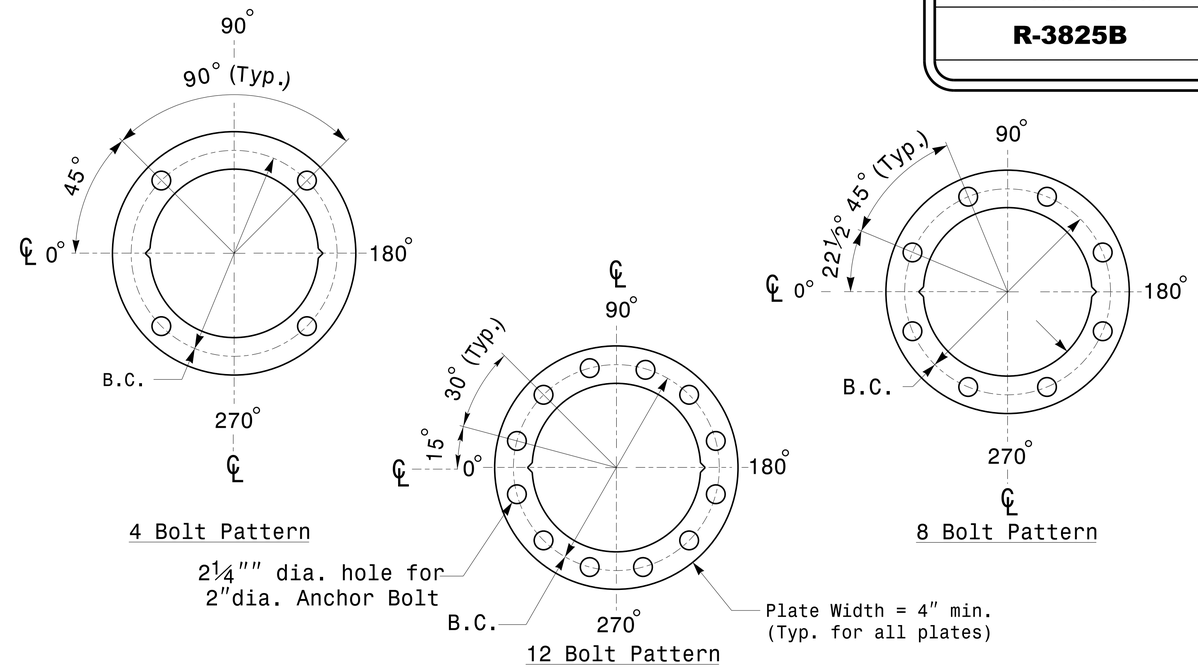

Construct Templates and Plates from ¼″ min. thick Steel. Galvanizing is not required.

Base Plate Template and Anchor Bolt Lock Plate Details

MFG _____ MFG. DATE: MM/YY
SHAFT D/T/L/Y ----/----/----/----
ARM-A D/T/L/Y ----/----/----/----
----/----/----/----
ARM-B D/T/L/Y ----/----/----/----
----/----/----/----
A.B. DIA./B.C./L/Y ----/----/----/----
NCDOT SIG. INV. NO. _____
NCDOT POLE NO. _____

Shaft I.D. Tag
(Provide on Shaft of Strain Poles and Mast Arm Poles Shaft)

MFG _____ MFG. DATE: MM/YY
SECTION D/T/L/Y ----/----/----/----
NCDOT SIG. INV. NO. _____
NCDOT POLE NO. _____

Arm I.D. Tag
(Provide on each section of a multi-section mast arm.)

Notes:
1) D= Diameter, T= Thickness, L= Length, Y= Yield Strength
2) A.B. = Anchor Bolt
3) B.C. = Bolt Circle of Anchor Bolts
4) If Custom Design, use "NCDOT STANDARD" line for Signal Inv. Number and pole I.D. number
5) See drawing M3 and M4 for mounting positions of I.D. tags.

Identification Tag Details

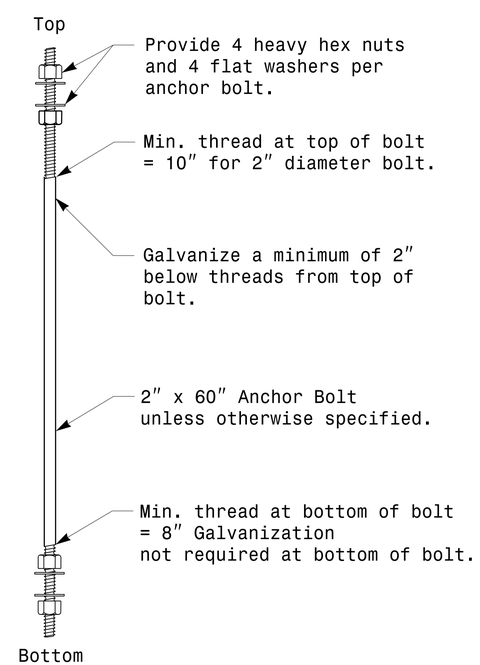

Anchor Bolt Detail

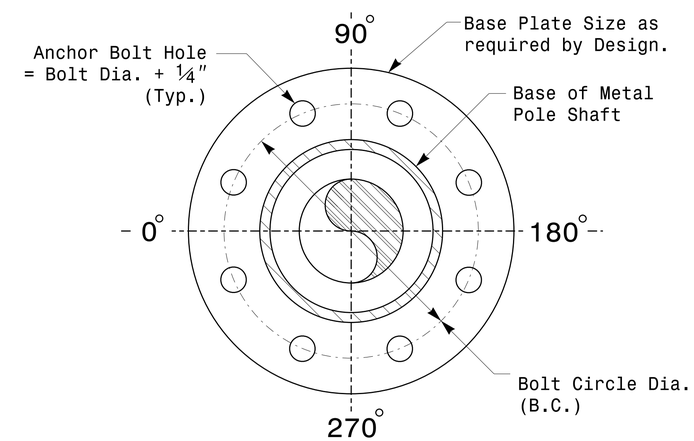

Note: Base plate may be circular,octagonal,square or rectangular in shape.

Typical Base Plate Detail

Prepared in the Offices of:
Transportation Mobility and Safety Division
Signal Design Section
750 N.Greenfield Pkwy,Garner,NC 27529

SCALE 0 NA NONE

Typical Fabrication Details For All Metal Poles

PLAN DATE:	OCTOBER 2017	DESIGNED BY:	C.F.ANDREWS
PREPARED BY:	N. BITTING	REVIEWED BY:	D.C. SARKAR

REVISIONS	INIT.	DATE

SEAL
NORTH CAROLINA PROFESSIONAL SEAL 028094 ENGINEER DEBESH C. SARKAR

DocuSigned by: Debesh C. Sarkar 44EBE32B0B4C... SIGNATURE 10/11/2017 DATE

11-OCT-2017 08:30
S:*ITS&SU*ITS Signals*Signal Design Section*Eastern Region*M Sheets*2016*2014 Sig.M2 Std. Fabrication Details-All Poles..dgn
rzalfman

DocuSign Envelope ID: EDEA80FB-80A3-45F4-B6C8-CD80310DC6C8

PROJECT ID. NO.	SHEET NO.
R-3825B	Sig.M3

Fabrication Details – Strain Poles

Note:
1. Opening in pole base plate shall be equal to pole base inside diameter minus 3½″ but shall not be less than 8½″.

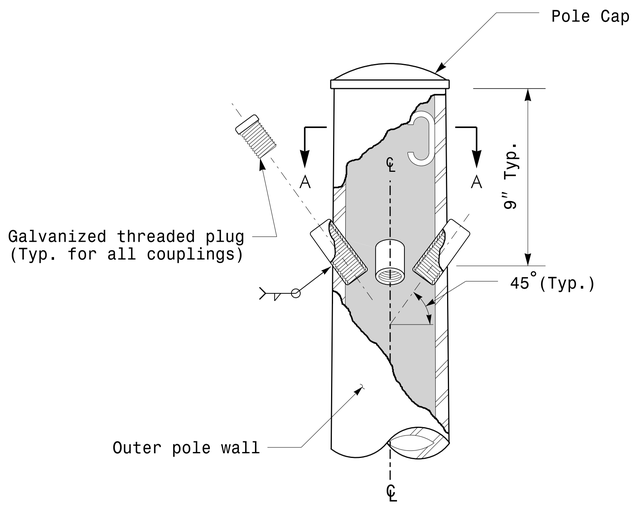

Cable Entrances at Top of Pole

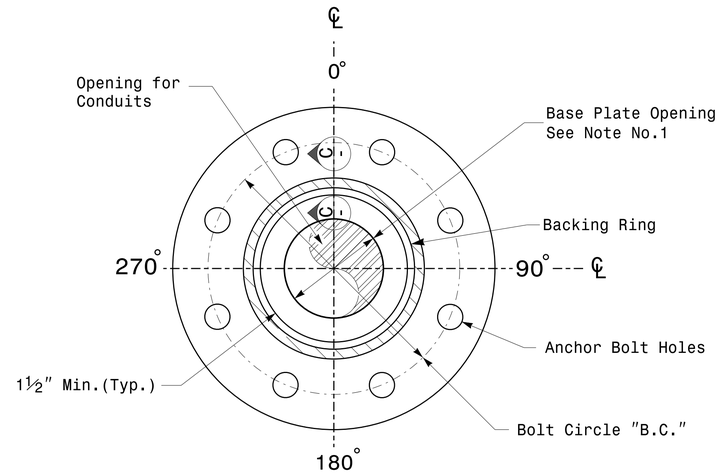

Section B-B

Pole Base Plate Details
(8 and 12 Bolt Pattern)

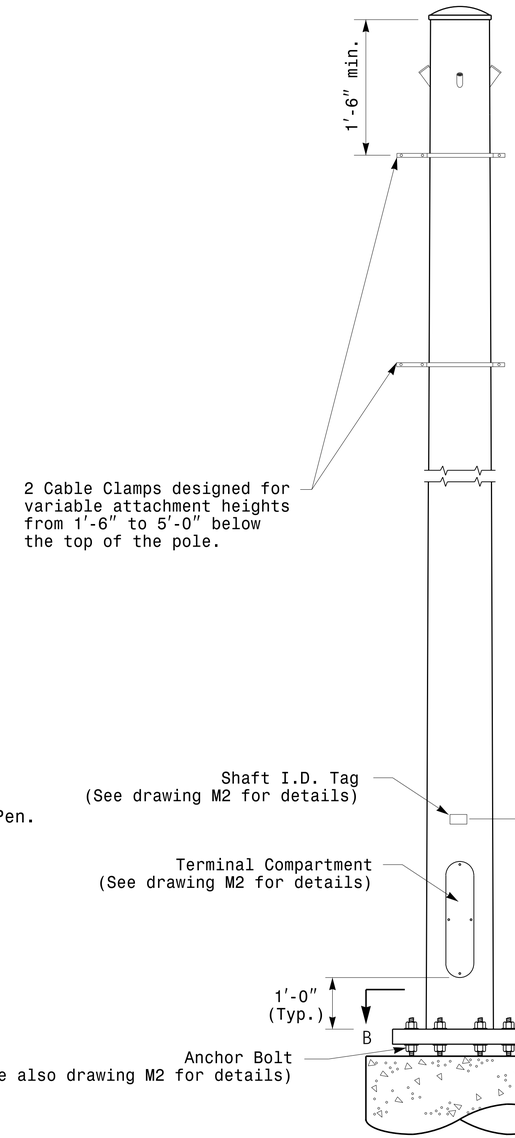

Monotube Strain Pole

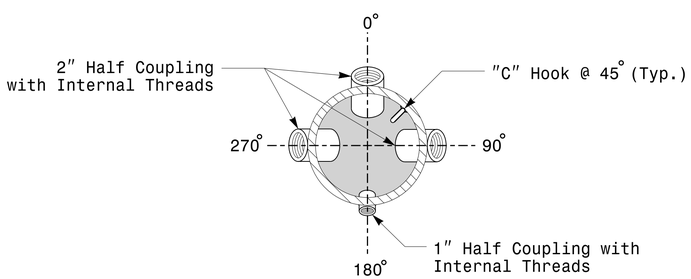

Section A-A

Radial Orientation for Factory Installed
Accessories at Top of Pole

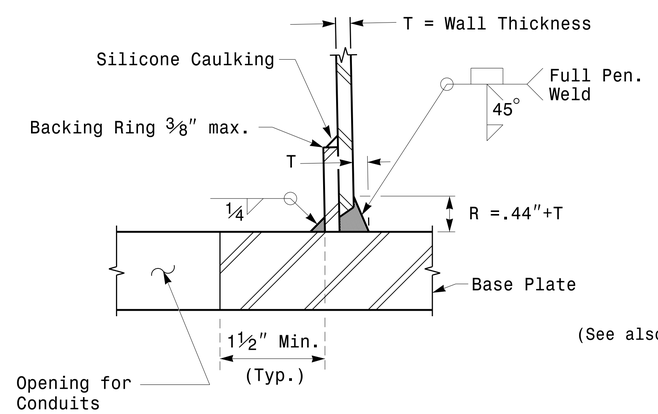

Section C-C
(Pole Attachment to Base Plate)

Full-Penetration
Groove Weld Detail

Prepared in the Offices of:
Transportation Mobility and Safety Division
Traffic Engineering Branch
Signal Design Section
750 N.Greenfield Pkwy,Garner,NC 27529

SCALE
0 NA
NONE

Typical Fabrication Details
For
Strain Poles

PLAN DATE:	OCTOBER 2017	DESIGNED BY:	K.C.DURIGON
PREPARED BY:	N. BITTING	REVIEWED BY:	D.C. SARKAR

REVISIONS	INIT.	DATE

SEAL
NORTH CAROLINA PROFESSIONAL SEAL 028094 ENGINEER DEBESH C. SARKAR

DocuSigned by:
Debesh C. Sarkar
44BE8E3D0A7C4B0...
SIGNATURE

10/11/2017
DATE

11-OCT-2017 08:25
S:\TSS&SW\ITS Signals\Signal Design Section\Eastern Region\M Sheets\2016\2014 Sig.M3 Std. Fabrication Details-Strain Poles.dgn
rnatisgr

DocuSign Envelope ID: EDEA80FB-80A3-45F4-B6C8-CD80310DC6C8

PROJECT ID. NO.	SHEET NO.
R-3825B	Sig.M4

Fabrication Details – Mast Arm Poles

Note:
1. Opening in pole base plate shall be equal to pole base inside diameter minus 3½″ but shall not be less than 8½″.

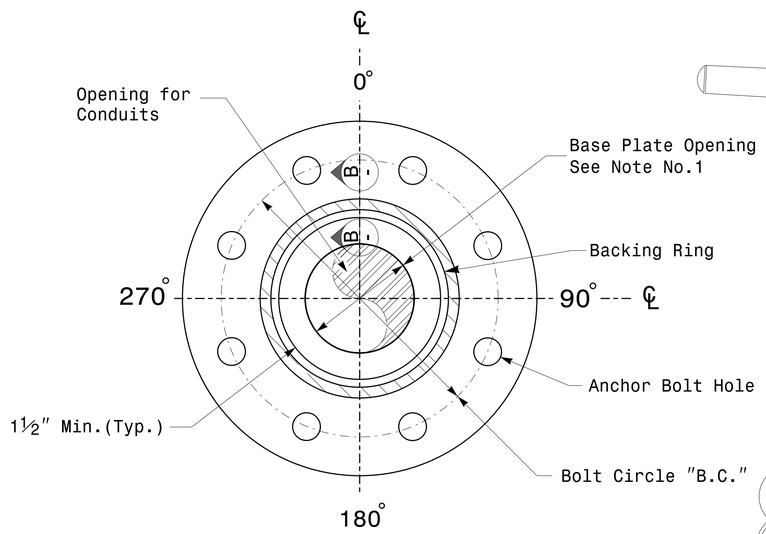

Section A-A

Pole Base Plate Details

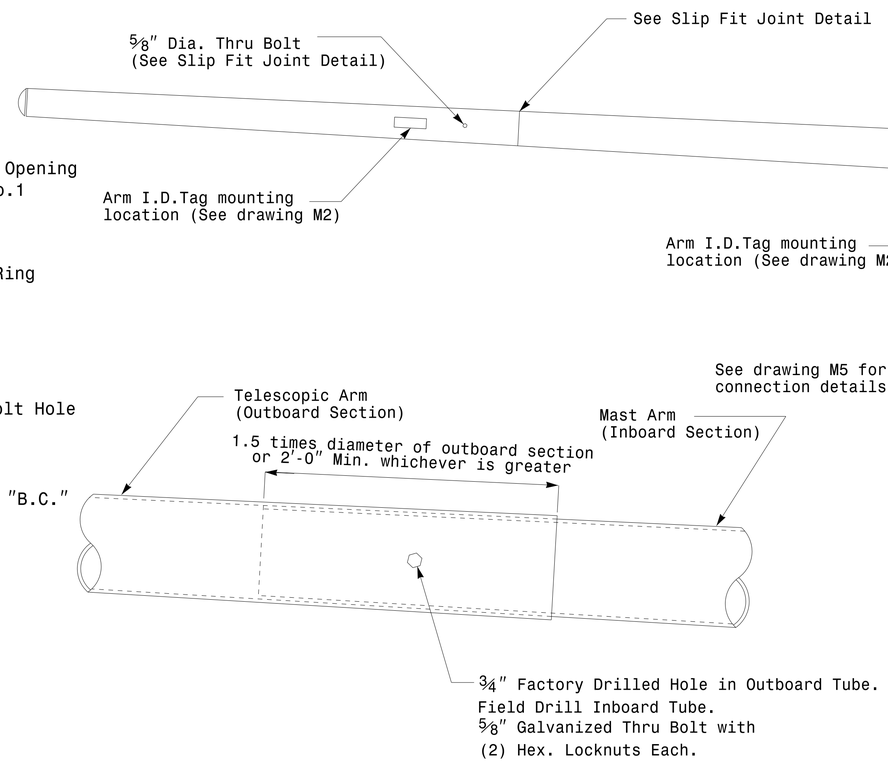

Slip Fit Joint Detail for Mast Arm

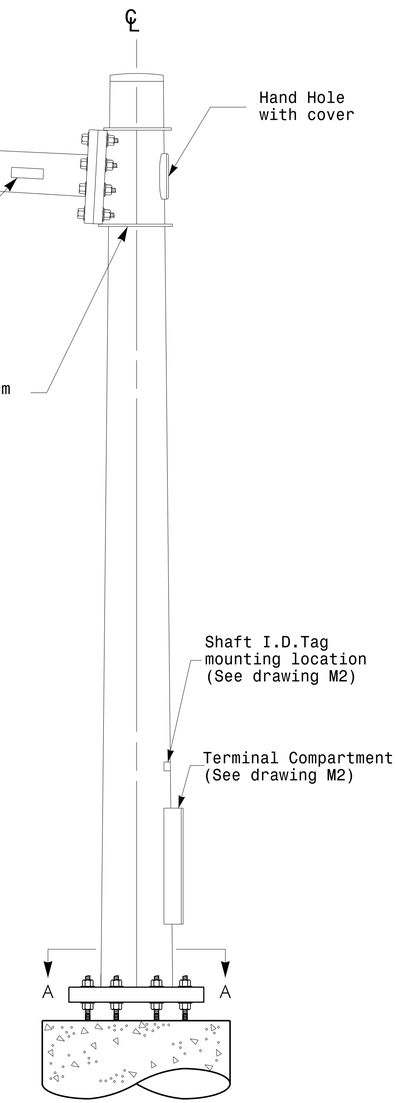

Mast Arm Pole

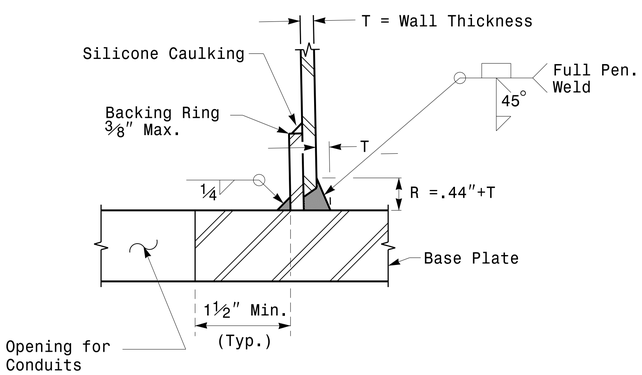

Section B-B

(Pole Attachment to Base Plate)

Full-Penetration Groove Weld Detail

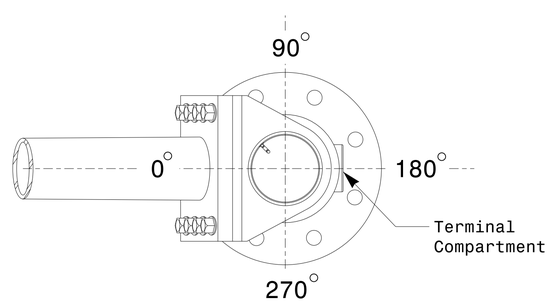

Mast Arm Radial Orientation

Prepared in the Offices of:
Transportation Mobility and Safety Division
Signal Design Section
750 N.Greenfield Pkwy,Garner,NC 27529

SCALE
0 NA
NONE

Typical Fabrication Details For Mast Arm Poles

PLAN DATE:	OCTOBER 2017	DESIGNED BY:	K.C.DURIGON
PREPARED BY:	N. BITTING	REVIEWED BY:	D.C. SARKAR

REVISIONS	INIT.	DATE

SEAL
NORTH CAROLINA PROFESSIONAL SEAL 028094 ENGINEER DEBESH C. SARKAR

DocuSigned by: Debesh C. Sarkar
SIGNATURE
10/11/2017
DATE

11-OCT-2017 08:33
S:\TSAS\TS Signals\Signal Design Section\Eastern Region\M Sheets\2016\2014 Sig.M4 Std. Fabrication Details-Mast Arm Poles.dgn
rsitnsor

DocuSign Envelope ID: EDEA80FB-80A3-45F4-B6C8-CD80310DC6C8

Welded Ring Stiffened Mast Arm Connection

PROJECT ID. NO.	SHEET NO.
R-3825B	Sig.M5

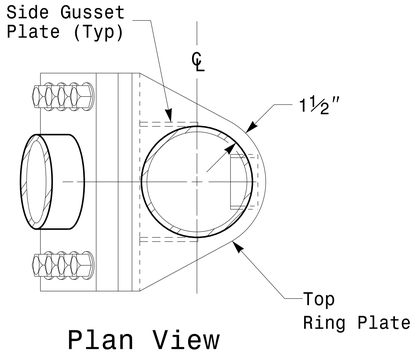

Plan View

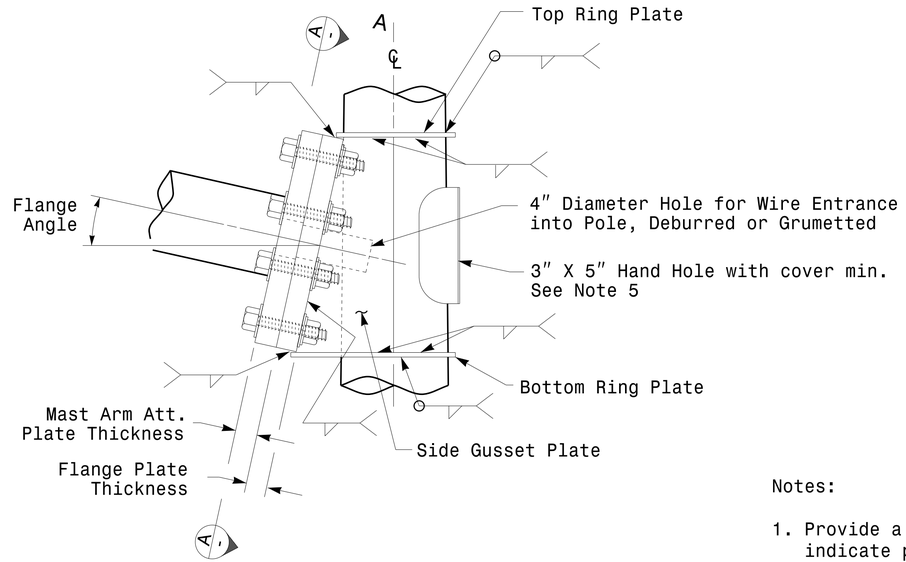

Side Elevation View

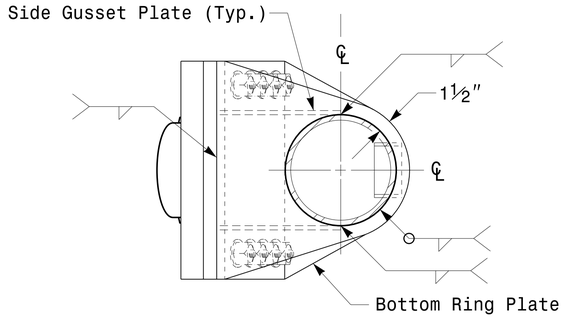

Bottom View

Notes:

1. Provide a permanent means of identification above the mast arm to indicate proper attachment orientation of the mast arm.
2. Designer will determine the size of all structural components, plates, fasteners, and welds shown unless they are already specified.
3. Fabricator is responsible for providing appropriate holes at drainage points to drain galvanizing materials.
4. For minimum edge distance follow AISC Table J3.4 and J3.5. For nominal bolt hole size use Table J3.3.
5. Provide upper handhole as necessary when shaft extensions are reguired for luminaire arms or camera. For poles without luminaires/camera, wiring can be done through the top of pole.
6. Allowable range of flange tilt angle will vary from 0° to as required.

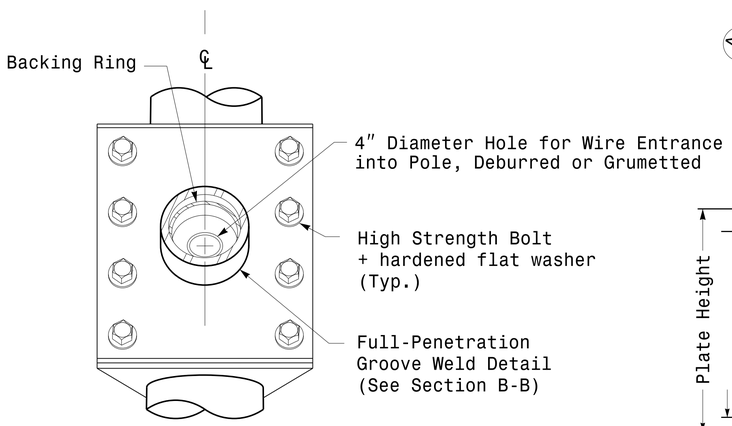

Front Elevation View

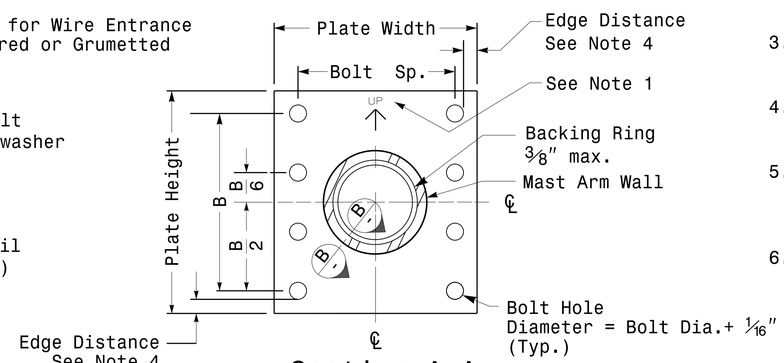

Section A-A
Mast Arm Attachment Plate

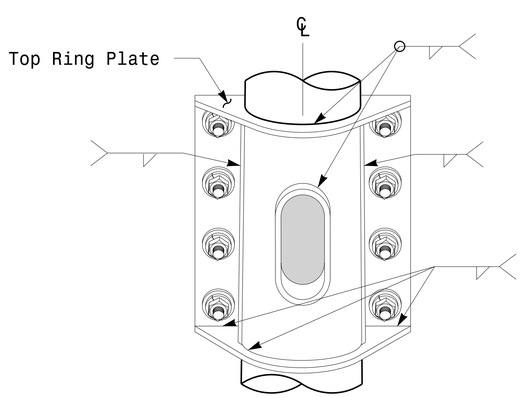

Back Elevation View

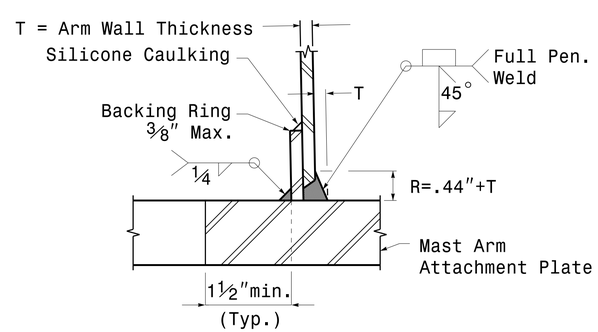

Section B-B
Full-Penetration Groove Weld Detail

Prepared in the Offices of:
Transportation Mobility and Safety Division
Signal Design Section
750 N.Greenfield Pkwy,Garner,NC 27529

SCALE
0 NA
NONE

Typical Fabrication Details
For
Mast Arm Connection To Pole

PLAN DATE:	OCTOBER 2017	DESIGNED BY:	C.F.ANDREWS
PREPARED BY:	N. BITTING	REVIEWED BY:	D.C. SARKAR

REVISIONS	INIT.	DATE

SEAL
NORTH CAROLINA PROFESSIONAL SEAL 028094 ENGINEER DEBESH C. SARKAR

DocuSigned by: Debesh C. Sarkar
44EBE3E3...
SIGNATURE
10/11/2017
DATE

Fabrication Details – Mast Arm Connection

11-OCT-2017 08:35
S:\TSAS\TS Signals\Signal Design Section\Eastern Region\M Sheets\2016\2014 Sig.M5 Std. Connection Fabrication Details-Mast Arm Poles.dgn
rsitnsar

DocuSign Envelope ID: EDEA80FB-80A3-45F4-B6C8-CD80310DC6C8

PROJECT ID. NO.	SHEET NO.
R-3825B	Sig.M6

Fabrication Details – Strain Pole Attachments

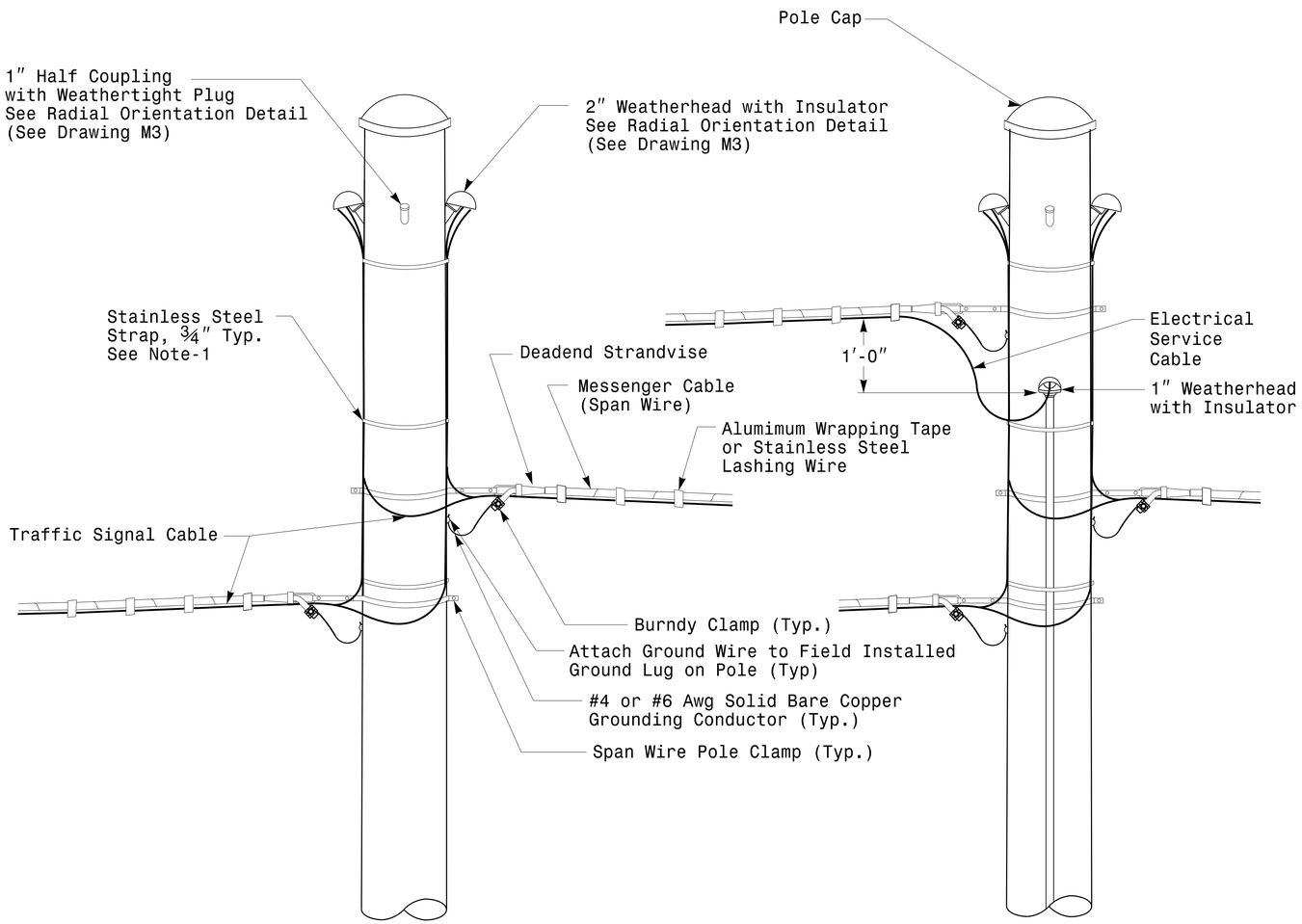

Strain Pole Attachments

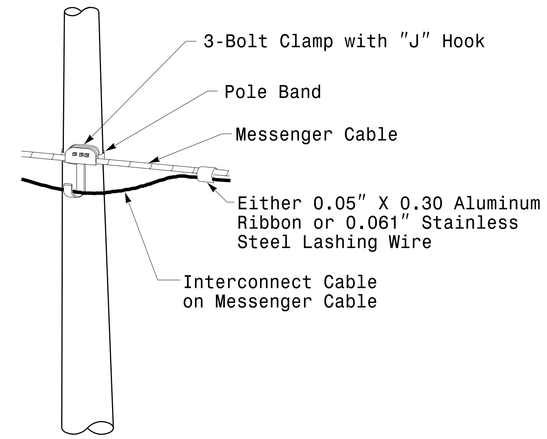

Attachment of Cable to Intermediate Metal Pole

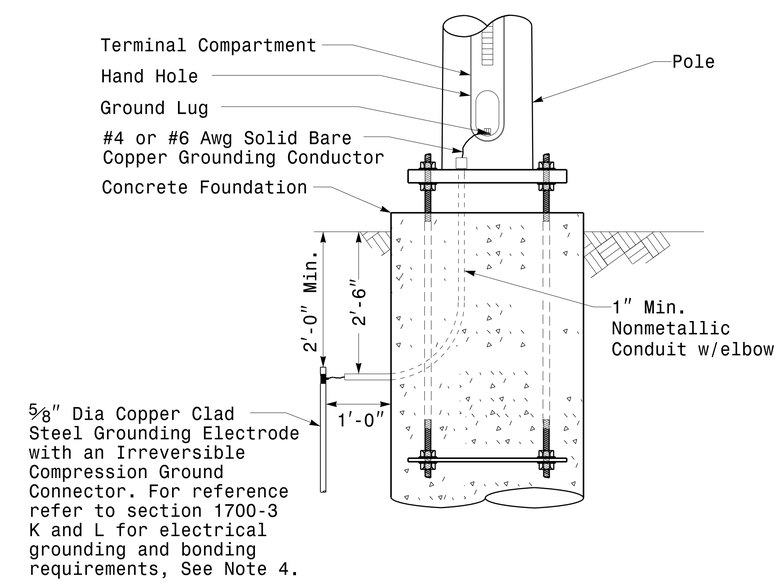

Metal Pole Grounding Detail For Strain Pole and Mast Arm

NOTE:

1. Strap all signal cables to the side of the pole with ¾″ stainless steel straps when the distance between the spanwire attachment clamp and the weatherheads exceeds 3′-0″.
2. Provide minimum two spanwire pole clamps per pole.
3. It is prohibited to attach two span wires at one pole clamp.
4. For general requirements refer to NCDOT Standard Specifications for Roadway and Structures, January 2018.

Prepared in the Offices of:
Transportation Mobility and Safety Division
Signal Design Section
750 N.Greenfield Pkwy.Garner.NC 27529

SCALE
0 NA
NONE

Typical Fabrication Details
For
Strain Pole Attachments

PLAN DATE:	OCTOBER 2017	DESIGNED BY:	C.F.ANDREWS
PREPARED BY:	N. BITTING	REVIEWED BY:	D.C. SARKAR

REVISIONS	INIT.	DATE

SEAL
NORTH CAROLINA PROFESSIONAL SEAL 028094 ENGINEER DEBESH C. SARKAR

DocuSigned by: Debesh C. Sarkar
SIGNATURE
10/11/2017
DATE

11-OCT-2017 08:36
S:\TTSASU\TS Signals\Signal Design Section\Eastern Region\M Sheets\2016\2014 Sig.M6 Std. Fabrication Details-Strain Poles.dgn
rmitscher

DocuSign Envelope ID: EDEA80FB-80A3-45F4-B6C8-CD80310DC6C8

PROJECT ID. NO.	SHEET NO.
R-3825B	Sig.M7

Construction Details – Foundations

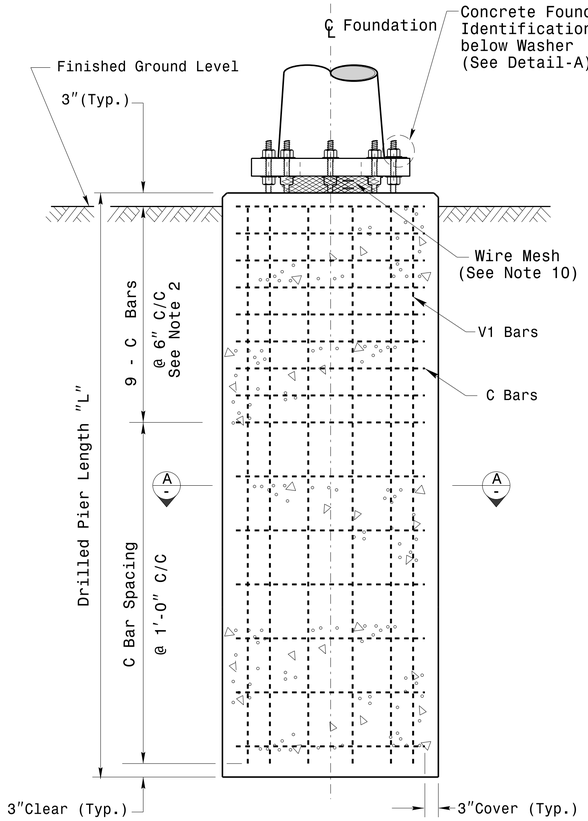

Concrete Shaft Elevation

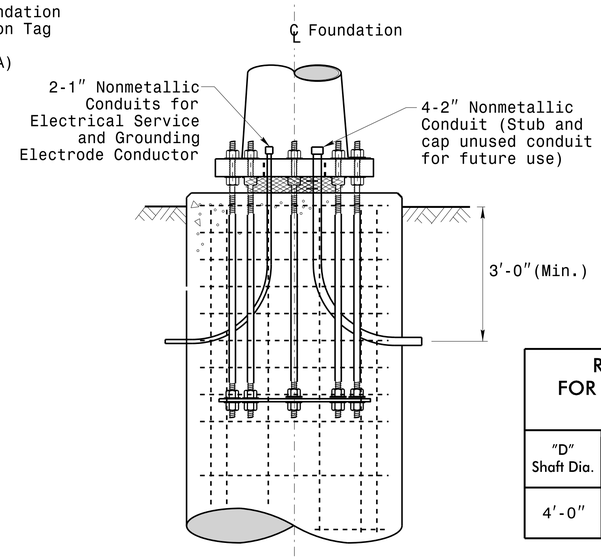

Typical Foundation Conduit Details

REINFORCING STEEL TABLE FOR STANDARD DRILL PIER SHAFT (4'–0" DIAMETER)						
"D" Shaft Dia.	Conc. Volume (cu. yds.)	Bar Name	MIN.	Size	Type	Length
4'-0"	.465 x L	V1	—	#8	STR.	**
		C	*	#4	CIR.	12'-6"

* See Note No. 2
** See Note No. 3

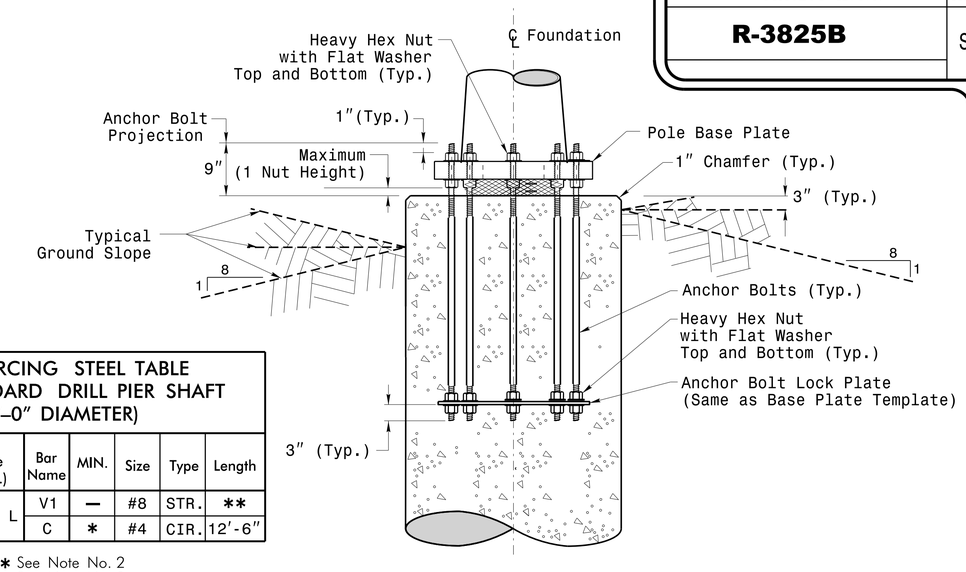

Typical Foundation Anchor Bolt Details

(Reinforcing Cage Not Shown for Clarity)

General Notes:

1. If actual subsurface conditions differ significantly from boring data contact the Engineer before excavating or placing concrete.
2. Circular tie reinforcing rings may be vertically adjusted by +/-3" at a depth between 2'-0" and 3'-0" to facilitate the installation of electrical conduit entering in the cage.
3. For standard foundations, see sheet Sig. M8 for details. Vertical reinforcing bars (V1) may be horizontally adjusted by +/-3" to facilitate the installation of electrical conduit entering into the cage.
4. Provide 2" to 5" foundation projection above ground level depending on the ground slope.
5. Unless otherwise shown, foundation designs are based on non-sloping level ground surfaces with slope ratios of 8:1 (H:V) or flatter. If actual ground line slopes are steeper contact the Engineer before excavating or placing concrete.
6. Construct foundations in accordance with NCDOT Standard Provisions SP09 R005- Foundations and Anchor Rod Assemblies for Metal Poles. All applicable 2018 NCDOT Standard Specifications are referenced in this provision. Refer to the NCDOT Resources/Specifications page located on the Connect NCDOT website.

   https://connect.ncdot.gov/resources/Specifications and Special Provisions.aspx
7. Use air entrained AA concrete mix with a compression strength of f'c=4500 psi.(min.) after 28 days.
8. Use ASTM A615 grade 60 deformed bars for all reinforcing steel. Maintain at least 3" cover on all reinforcement.
9. Locate the Identification Tag on the top of the base plate, directly above the conduit's entry point.
10. Provide two layers of galvanized welded 23 gauge (0.25) 6" wide 4 mesh wire around pipes under the base plate and secure it with ties if necessary.
11. Preferred location for the I.D. Tag is as shown in Detail-A; directly above the conduit entering the foundation.

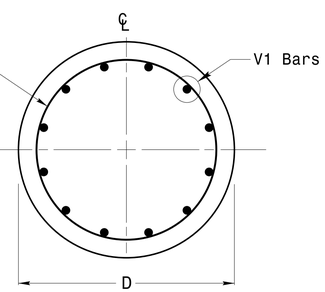

Section A-A

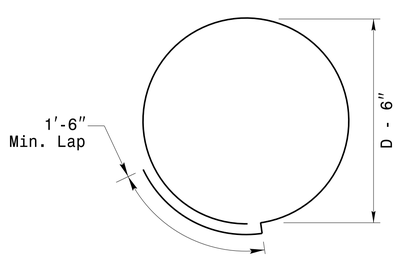

Typical "C" Bar Detail

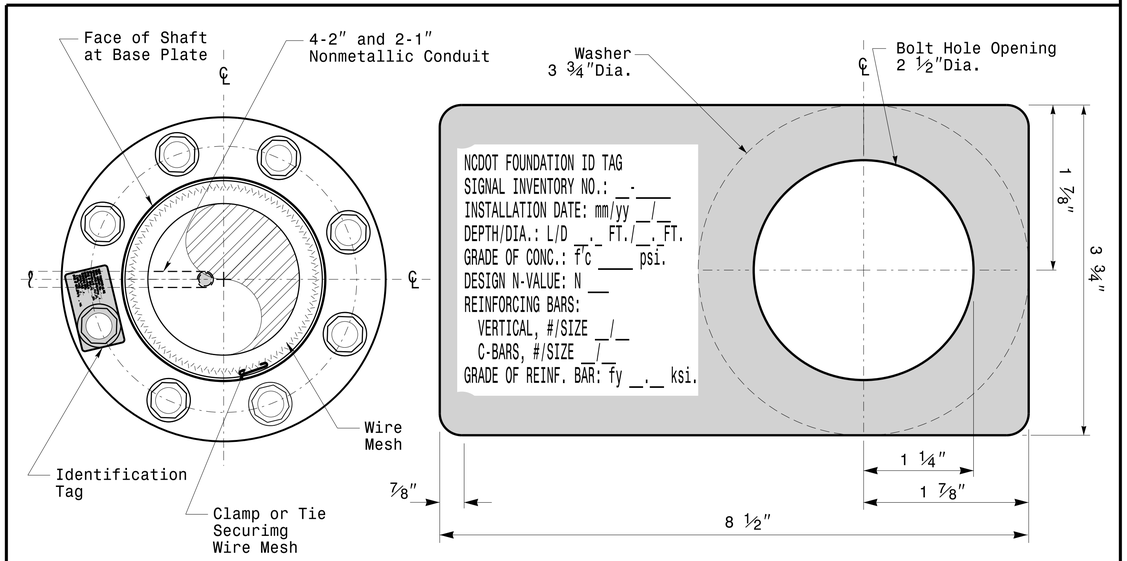

D = Diameter
L = Length/Depth
mm = Month
yy = Year

Detail-A

Concrete Foundation Identification Tag Details

Prepared in the Offices of:
Transportation Mobility and Safety Division
Signal Design Section
750 N.Greenfield Pkwy.Garner,NC 27529

SCALE: 0 NA — NONE

Construction Details For Foundations

PLAN DATE:	OCTOBER 2018	DESIGNED BY:	C.B.COGDELL
PREPARED BY:	N. BITTING	REVIEWED BY:	D.C. SARKAR

REV. NO.	COMMENTS	INIT.	DATE
1	Revised Foundation Tag Details	N.B.	5/11/2015

SEAL: NORTH CAROLINA PROFESSIONAL SEAL 028094 ENGINEER DEBESH C. SARKAR

DocuSigned by: Debesh C. Sarkar — 4AEBE3D5... SIGNATURE — 10/11/2017 DATE

11-OCT-2017 08:37
S:\TTS&SU\TTS Signals\Signal Design Section\Eastern Region\M Sheets\2016\2014 Sig.M7 Std. Construction Details-Strain Poles.dgn
rsallsbur

DocuSign Envelope ID: EDEA80FB-80A3-45F4-B6C8-CD80310DC6C8

PROJECT ID. NO.	SHEET NO.
R-3825B	Sig.M8

SOIL CONDITION

		STANDARD STRAIN POLES						STANDARD FOUNDATIONS 48″ Diameter Drilled Pier Length (L) – Feet							Reinforcement			
					Reactions at the Pole Base			Clay				Sand			Longitudinal		Stirrups	
		Case No.	Pole Height (Ft.)	Base Plate BC (In.)	Axial (kip)	Shear (kip)	Moment (ft–kip)	Medium N–Value 4–8	Stiff N–Value 9–15	Very Stiff N–Value 16–30	Hard N–Value >30	Loose N–Value 4–10	Medium N–Value 11–30	Dense N–Value >30	Bar Size (#)	Quantity (ea.)	Bar Size (#)	Spacing (in.)
WIND ZONE 1	LIGHT	S26L3	26	25	2	11	270	19	13	10	8	17	14.5	12.5	8	12	4	12
		S30L3	30	25	2	11	300	19.5	13.5	10	8	17.5	15	13	8	14	4	12
		S35L3	35	25	3	11	320	20	13.5	10.5	8	17.5	15	13	8	14	4	12
	HEAVY	S30H3	30	29	3	16	450	24.5	16	12	9	21	17.5	15	8	16	4	6
		S35H3	35	29	4	16	515	26	17	12.5	9.5	22	18.5	16	8	16	4	6
WIND ZONE 2	LIGHT	S26L2	26	23	2	10	245	18	12.5	9.5	8	16.5	14	12	8	12	4	12
		S30L2	30	23	2	10	270	18.5	12.5	10	8	16.5	14	12.5	8	12	4	12
		S35L2	35	23	3	10	300	19.5	13	10	8	17	14.5	13	8	12	4	12
	HEAVY	S30H2	30	29	3	15	415	23	15.5	11.5	9	20	17	14.5	8	16	4	6
		S35H2	35	29	4	15	475	25	16.5	12	9.5	21	17.5	15.5	8	16	4	6
WIND ZONE 3	LIGHT	S26L2	26	23	2	10	245	18	12.5	9.5	8	16.5	14	12	8	12	4	12
		S30L2	30	23	2	10	270	18.5	12.5	10	8	16.5	14	12.5	8	12	4	12
		S35L2	35	23	3	10	300	19.5	13	10	8	17	14.5	13	8	12	4	12
	HEAVY	S30H2	30	29	3	15	415	23	15.5	11.5	9	20	17	14.5	8	16	4	6
		S35H2	35	29	4	15	475	25	16.5	12	9.5	21	17.5	15.5	8	16	4	6
WIND ZONE 4	LIGHT	S26L1	26	22	2	8	190	16	11.5	8.5	8	15	12.5	11	8	12	4	12
		S30L1	30	22	2	8	205	16.5	11.5	9	8	15	13	11.5	8	12	4	12
		S35L1	35	22	3	8	230	17	12	9	8	15.5	13.5	11.5	8	12	4	12
	HEAVY	S30H1	30	25	3	12	320	20.5	13.5	10.5	8	18	15	13.5	8	16	4	6
		S35H1	35	25	4	12	350	21	14	10.5	8.5	18.5	15.5	13.5	8	16	4	6
WIND ZONE 5	LIGHT	S26L2	26	23	2	10	245	18	12.5	9.5	8	16.5	14	12	8	12	4	12
		S30L2	30	23	2	10	270	18.5	12.5	10	8	16.5	14	12.5	8	12	4	12
		S35L2	35	23	3	10	300	19.5	13	10	8	17	14.5	13	8	12	4	12
	HEAVY	S30H2	30	29	3	15	415	23	15.5	11.5	9	20	17	14.5	8	16	4	6
		S35H2	35	29	4	15	475	25	16.5	12	9.5	21	17.5	15.5	8	16	4	6

48″ Dia. Foundations Concrete Volume (cubic yards) = (0.465) x Drilled Pier Length

General Notes:

1. Values shown in the "Reactions at the Pole Base" column represent the minimum acceptable capacity allowed for design using a design CSR of 1.00.
2. Use chairs and spacers to maintain proper clearance.
3. For foundation, always use air-entrain concrete mix.

Foundation Selection:

1. Perform a standard penetration test at each proposed foundation site to determine "N" value.
2. Select the appropriate wind zone from M 1 drawing.
3. Select the soil type (Clay or Sand) that best describes the soil characteristics.
4. Get the appropriate standard pole case number from the plans or from the Engineer.
5. Select the appropriate column under "Standard Foundations" based on soil type and "N" value. Select the appropriate row based on the pole load case.
6. The foundation depth is the value shown in the "Standard Foundations" category where the column and the row intersect.
7. Use Construction Procedures and Design Methods prescribed by FHWA-NHI-10-016 for Reference Drilled Shafts.

Standard Strain Pole Foundation–All Soil Condition

Prepared in the Offices of: Transportation Mobility and Safety Division, Signal Design Section
750 N.Greenfield Pkwy,Garner,NC 27529

SCALE: 0 NA — NONE

Standard Strain Pole Foundation for All Soil Conditions

PLAN DATE:	OCTOBER 2017	DESIGNED BY:	C.B. COGDELL
PREPARED BY:	N. BITTING	REVIEWED BY:	D.C. SARKAR

REVISIONS	INIT.	DATE
Changed "Foundation Depth" to "Drilled Pier Length" in Conc. Eqn.	N.B.	7/12/2015

SEAL

NORTH CAROLINA PROFESSIONAL SEAL 028094 ENGINEER DEBESH C. SARKAR

DocuSigned by: Debesh C. Sarkar — SIGNATURE — 10/11/2017 DATE

11-OCT-2017 08:40
S:★ITS&SU★ITS Signals★Signal Design Section★Eastern Region★MM Sheets★2016★2014 Sig.M8 Std. Strain Pole Found.-Saturated Soil Condition.dgn
rtatrnsdr

DocuSign Envelope ID: A07F78AB-D1C0-4758-9080-F3EDB5313497

PROJECT REFERENCE NO.	SHEET NO.
R-3825B	SCP-1

1. INSTALL REA, PE – 22, SHIELDED, TWISTED PAIR COMMUNICATIONS CABLE
2. INSTALL REA, PE – 38, (FIGURE – 8) SHIELDED, TWISTED PAIR COMMUNICATIONS CABLE
3. INSTALL REA, PE – 39, (UNDERGROUND) SHIELDED, TWISTED PAIR COMMUNICATIONS CABLE
4. INSTALL SMFO CABLE
5. INSTALL MMFO CABLE
6. INSTALL FIBER OPTIC DROP CABLE
7. INSTALL TRACER WIRE
8. TRENCH
9. INSTALL PVC CONDUIT
10. INSTALL RIGID, GALVANIZED STEEL CONDUIT
11. INSTALL RIGID, GALVANIZED STEEL RISER WITH WEATHERHEAD
12. INSTALL RIGID, GALVANIZED STEEL RISER WITH FIBER OPTIC CABLE SEAL
13. INSTALL OUTER–DUCT POLYETHYLENE CONDUIT
14. INSTALL POLYETHYLENE CONDUIT
15. DIRECTIONAL DRILL CONDUIT
16. BORE AND JACK CONDUIT
17. INSTALL CABLE(S) IN EXISTING CONDUIT
18. INSTALL CABLE(S) IN NEW CONDUIT
19. INSTALL CABLE(S) IN EXISTING RISER
20. INSTALL CABLE(S) IN NEW RISER
21. INSTALL CABLE(S) IN EXISTING CONDUIT STUBOUTS
22. INSTALL NEW CONDUIT INTO EXISTING CABINET BASE (USE EXISTING CONDUIT STUB–OUTS WHEN AVAILABLE)
23. INSTALL NEW RISER INTO EXISTING CABINET BASE (USE EXISTING CONDUIT STUB–OUTS WHEN AVAILABLE)
24. INSTALL NEW CONDUIT INTO EXISTING POLE MOUNTED CABINET
25. INSTALL NEW RISER INTO EXISTING POLE MOUNTED CABINET
26. TERMINATE COMMUNICATIONS CABLE ON EXISTING TELEMETRY INTERFACE PANEL IN TRAFFIC SIGNAL CONTROLLER CABINET
27. INSTALL NEW TELEMETRY INTERFACE PANEL IN TRAFFIC SIGNAL CONTROLLER CABINET
28. INSTALL INTERCONNECT CENTER, PATCH PANEL, JUMPERS, AND FUSION SPLICE CABLE IN CABINET
29. INSTALL UNDERGROUND SPLICE ENCLOSURE
30. INSTALL AERIAL SPLICE ENCLOSURE
31. INSTALL POLE MOUNTED SPLICE CABINET
32. INSTALL BASE MOUNTED SPLICE CABINET
33. REMOVE EXISTING SPLICE CABINET
34. INSTALL CABINET FOUNDATION
35. REMOVE EXISTING CABINET FOUNDATION
36. INSTALL CCTV CAMERA ASSEMBLY
37. INSTALL CCTV CAMERA WOOD POLE
38. INSTALL CCTV CAMERA METAL POLE AND FOUNDATION
39. INSTALL JUNCTION BOX
40. INSTALL OVERSIZED JUNCTION BOX
41. REMOVE EXISTING JUNCTION BOX
42. INSTALL WOOD POLE
43. REMOVE EXISTING WOOD POLE
44. INSTALL AERIAL GUY ASSEMBLY
45. INSTALL STANDARD GUY ASSEMBLY
46. INSTALL SIDEWALK GUY ASSEMBLY
47. INSTALL MESSENGER CABLE
48. REMOVE EXISTING COMMUNICATIONS CABLE AND MESSENGER CABLE
49. REMOVE EXISTING COMMUNICATIONS CABLE
50. INSTALL TELEPHONE SERVICE
51. INSTALL CABLE STORAGE RACKS (SNOW SHOES) AND STORE 100 FEET OF CABLE
52. INSTALL DELINEATOR MARKER
53. STORE 20 FEET OF COMMUNICATIONS CABLE
54. LASH CABLE(S) TO EXISTING SIGNAL/COMMUNICATIONS CABLE
55. LASH CABLE(S) TO EXISTING MESSENGER CABLE
56. LASH CABLE(S) TO NEW MESSENGER CABLE
57. MODIFY EXISTING ELECTRICAL SERVICE
58. INSTALL NEW ELECTRICAL SERVICE
59. INSTALL ETHERNET EDGE SWITCH

LEGEND

- FO — NEW FIBER OPTIC COMMUNICATIONS CABLE
- TWIST PR — NEW TWISTED PAIR COMMUNICATIONS CABLE
- EXI — EXISTING COMMUNICATIONS CABLE
- REM — EXISTING COMMUNICATIONS CABLE TO BE REMOVED
- NEW AERIAL GUY ASSEMBLY
- NEW CONDUIT
- EXISTING CONDUIT
- DD — NEW DIRECTIONAL DRILLED CONDUIT
- B&J — NEW BORED AND JACKED CONDUIT
- NEW JUNCTION BOX
- EXISTING JUNCTION BOX
- NEW WOOD POLE
- EXISTING WOOD POLE
- S — NEW ENCLOSURE
- NEW METAL POLE
- EXISTING METAL POLE
- NEW CCTV CAMERA ASSEMBLY
- NEW STANDARD GUY ASSEMBLY
- NEW STANDARD GUY USING EXISTING ANCHOR
- NEW SIDEWALK GUY ASSEMBLY
- NEW CABLE STORAGE RACKS (SNOW SHOES)
- EXISTING CONTROLLER AND CABINET
- S — EXISTING SPLICE CABINET
- S — NEW SPLICE CABINET
- SP — SIGNAL POLE
- XX–XXXX — SIGNAL INVENTORY NUMBER

CONSTRUCTION NOTE SYMBOLOGY KEY

- XX — INDICATES NUMBER OF CABLES, LOOPS, ETC.
- XX — INDICATES NUMBER OF FIBERS PER CABLE, TWISTED PAIRS PER CABLE, ETC.
- XX — INDICATES NUMBER OF RISER(S)/CONDUIT(S)
- XX — INDICATES DIAMETER OF RISER(S)/CONDUIT(S) (INCH)

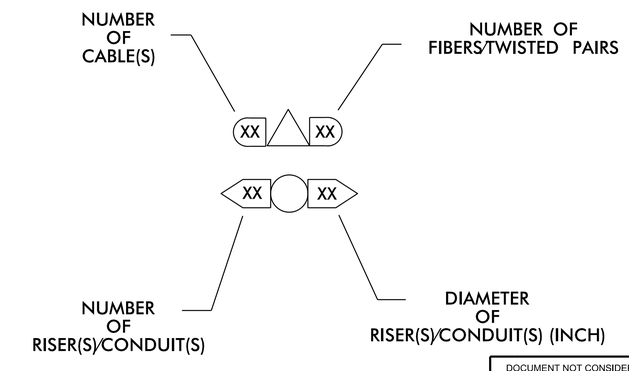

DOCUMENT NOT CONSIDERED FINAL UNLESS ALL SIGNATURES COMPLETED

Prepared by
URS
URS Corporation – North Carolina
1600 Perimeter Park Drive
Morrisville, North Carolina 27560
TELEPHONE (919) 461-1100 FAX (919) 461-1415
NC LICENSE • C-2243

Prepared for the Offices of:
Transportation Mobility and Safety Division
STATE OF NORTH CAROLINA DEPARTMENT OF TRANSPORTATION
Intelligent Transportation Systems Section
750 N. Greenfield Pkwy., Garner, NC 27529

Construction Notes

Division 4 Johnston County Clayton

PLAN DATE: January 2018 REVIEWED BY: C. L. Kalencik
PREPARED BY: S. W. Cox REVIEWED BY:

SCALE 0 NA N.T.S.

REVISIONS	INIT.	DATE

SEAL
NORTH CAROLINA PROFESSIONAL SEAL 37856 ENGINEER STEVEN W. COX
DocuSigned by: Steven Cox 2AFA2897734149C...
5/25/2018

CADD Filename:

5/25/2018
L:\Mcrisville\Jobs\R3825B\Traffic\Signals\R3825B SCP-1.dgn
coxsi

DocuSign Envelope ID: A07F78AB-D1C0-4758-9080-F3EDB5313497

PROJECT REFERENCE NO.	SHEET NO.
R-3825B	SCP-2

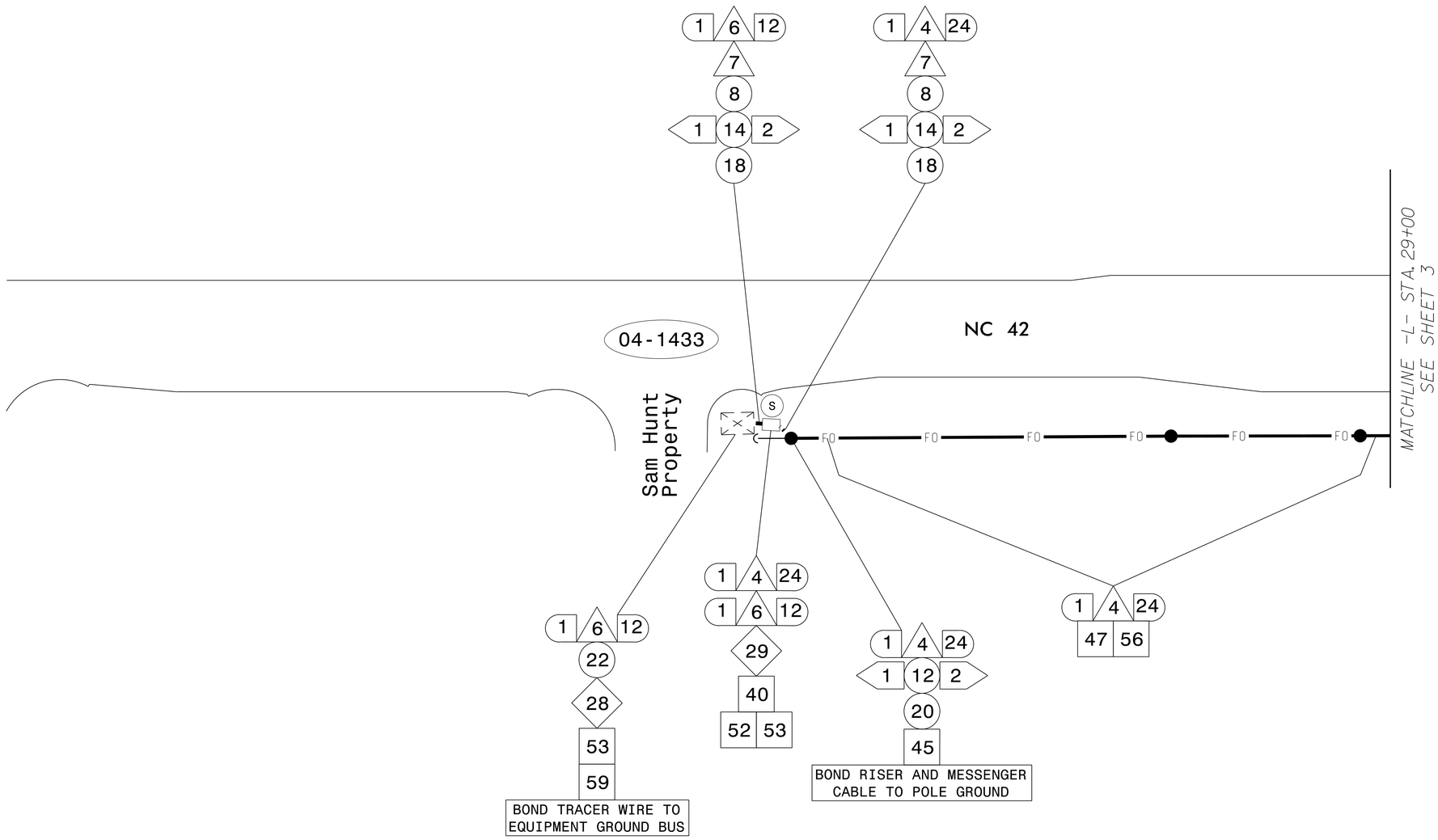

NOTES:

1. ALL CABLE ATTACHMENT POINTS ARE 40" BELOW NEUTRAL UNLESS OTHERWISE NOTED.

2. NOTIFY THE NCDOT DIVISION 4 TRAFFIC ENGINEER, ANDY BROWN, AT (252) 640–6505 EXT 3544, FIVE (5) DAYS PRIOR TO BEGINNING WORK ON SIGNAL SYSTEM COMMUNICATIONS CABLE. NOTIFY THE DIVISION 4 TRAFFIC ENGINEER AFTER ALL WORK IS PERFORMED. ALL WORK IS NOT COMPLETE UNTIL THE SIGNAL SYSTEM IS OPERATIONAL.

Prepared by
URS
URS Corporation – North Carolina
1600 Perimeter Park Drive
Morrisville, North Carolina 27560
TELEPHONE (919) 461-1100 FAX (919) 461-1415
NC LICENSE # C-2243

Prepared for the Offices of:
750 N. Greenfield Pkwy., Garner, NC 27529

SCALE 0 50
1"=50'

Communications Cable and Conduit Routing Plans

Division 4 Johnston County Clayton

PLAN DATE: January 2018 REVIEWED BY: C. L. Kalencik
PREPARED BY: S. W. Cox REVIEWED BY:

REVISIONS	INIT.	DATE

DOCUMENT NOT CONSIDERED FINAL UNLESS ALL SIGNATURES COMPLETED

SEAL
NORTH CAROLINA PROFESSIONAL SEAL 37856 ENGINEER STEVEN W. COX

DocuSigned by: Steven Cox
2AFA2897734149C...
5/25/2018

CADD Filename:

5/25/2018
L:\Work\Sville\Jobs\R3825B\Traffic\Signals\R3825B SCP-2.dgn
cox5

DocuSign Envelope ID: A07F78AB-D1C0-4758-9080-F3EDB5313497

PROJECT REFERENCE NO.	SHEET NO.
R-3825B	SCP-3

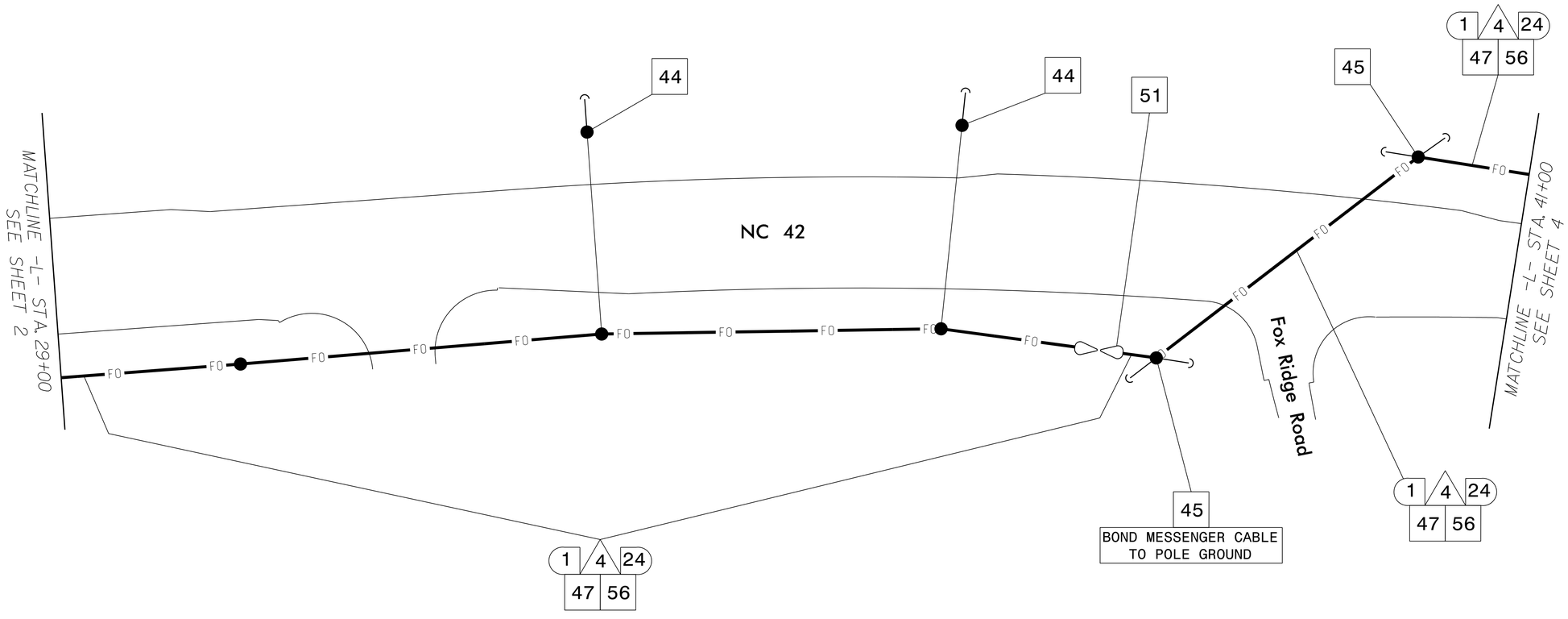

NOTES:

1. ALL CABLE ATTACHMENT POINTS ARE 40" BELOW NEUTRAL UNLESS OTHERWISE NOTED.

2. NOTIFY THE NCDOT DIVISION 4 TRAFFIC ENGINEER, ANDY BROWN, AT (252) 640–6505 EXT 3544, FIVE (5) DAYS PRIOR TO BEGINNING WORK ON SIGNAL SYSTEM COMMUNICATIONS CABLE. NOTIFY THE DIVISION 4 TRAFFIC ENGINEER AFTER ALL WORK IS PERFORMED. ALL WORK IS NOT COMPLETE UNTIL THE SIGNAL SYSTEM IS OPERATIONAL.

Prepared by
URS
URS Corporation – North Carolina
1600 Perimeter Park Drive
Morrisville, North Carolina 27560
TELEPHONE (919) 461-1100 FAX (919) 461-1415
NC LICENSE • C-2243

Prepared for the Offices of:
750 N. Greenfield Pkwy., Garner, NC 27529

SCALE 0 50 1"=50'

Communications Cable and Conduit Routing Plans

Division 4 Johnston County Clayton

PLAN DATE:	January 2018	REVIEWED BY:	C. L. Kalencik
PREPARED BY:	S. W. Cox	REVIEWED BY:	

REVISIONS	INIT.	DATE

DOCUMENT NOT CONSIDERED FINAL UNLESS ALL SIGNATURES COMPLETED

SEAL
NORTH CAROLINA PROFESSIONAL SEAL 37856 ENGINEER STEVEN W. COX

DocuSigned by: Steven Cox 2AFA2897734149C... 5/25/2018

CADD Filename:

5/25/2018
L:\WP7\Skville\Jobs\R3825B\Traffic\Signals\R3825B SCP-3.dgn
coxsi

DocuSign Envelope ID: A07F78AB-D1C0-4758-9080-F3EDB5313497

PROJECT REFERENCE NO.	SHEET NO.
R-3825B	SCP-4

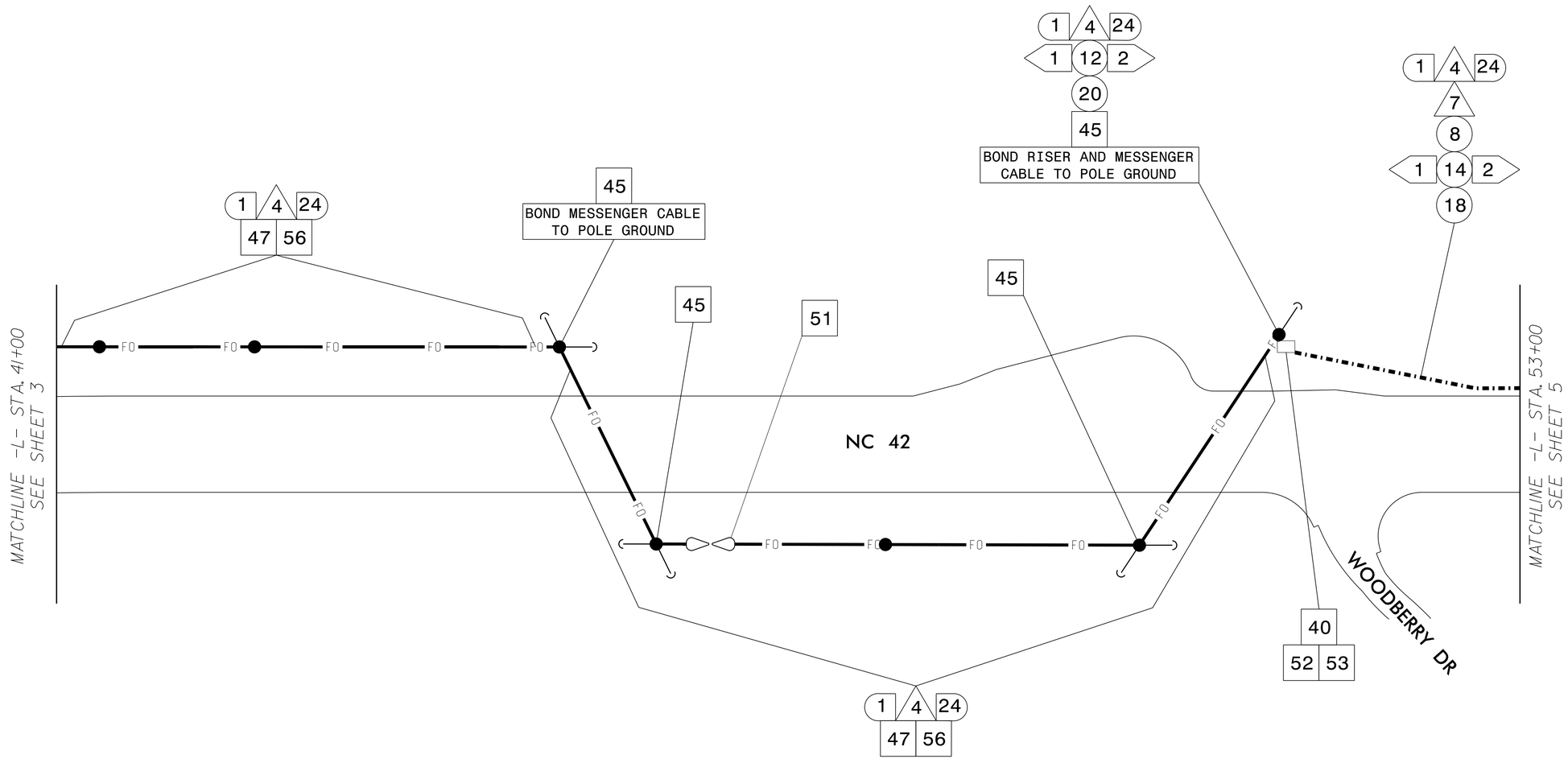

NOTES:

1. ALL CABLE ATTACHMENT POINTS ARE 40" BELOW NEUTRAL UNLESS OTHERWISE NOTED.

2. NOTIFY THE NCDOT DIVISION 4 TRAFFIC ENGINEER, ANDY BROWN, AT (252) 640–6505 EXT 3544, FIVE (5) DAYS PRIOR TO BEGINNING WORK ON SIGNAL SYSTEM COMMUNICATIONS CABLE. NOTIFY THE DIVISION 4 TRAFFIC ENGINEER AFTER ALL WORK IS PERFORMED. ALL WORK IS NOT COMPLETE UNTIL THE SIGNAL SYSTEM IS OPERATIONAL.

Prepared by
URS
URS Corporation – North Carolina
1600 Perimeter Park Drive
Morrisville, North Carolina 27560
TELEPHONE (919) 461-1100 FAX (919) 461-1415
NC LICENSE • C-2243

Prepared for the Offices of:
Transportation Mobility and Safety Division
STATE OF NORTH CAROLINA
DEPARTMENT OF TRANSPORTATION
Intelligent Transportation Systems Section
750 N. Greenfield Pkwy., Garner, NC 27529

SCALE 0 50
1"=50'

Communications Cable and Conduit Routing Plans

Division 4 Johnston County Clayton

PLAN DATE: January 2018 REVIEWED BY: C. L. Kalencik
PREPARED BY: S. W. Cox REVIEWED BY:

REVISIONS	INIT.	DATE

DOCUMENT NOT CONSIDERED FINAL UNLESS ALL SIGNATURES COMPLETED

SEAL
NORTH CAROLINA PROFESSIONAL SEAL 37856 ENGINEER STEVEN W. COX
DocuSigned by: Steven Cox 2AFA289773149C...
5/25/2018

CADD Filename:

5/25/2018
L:\Work Files\Jobs\R3825B\Traffic\Signals\R3825B SCP-4.dgn
coxs1

DocuSign Envelope ID: A07F78AB-D1C0-4758-9080-F3EDB5313497

PROJECT REFERENCE NO.	SHEET NO.
R-3825B	SCP-5

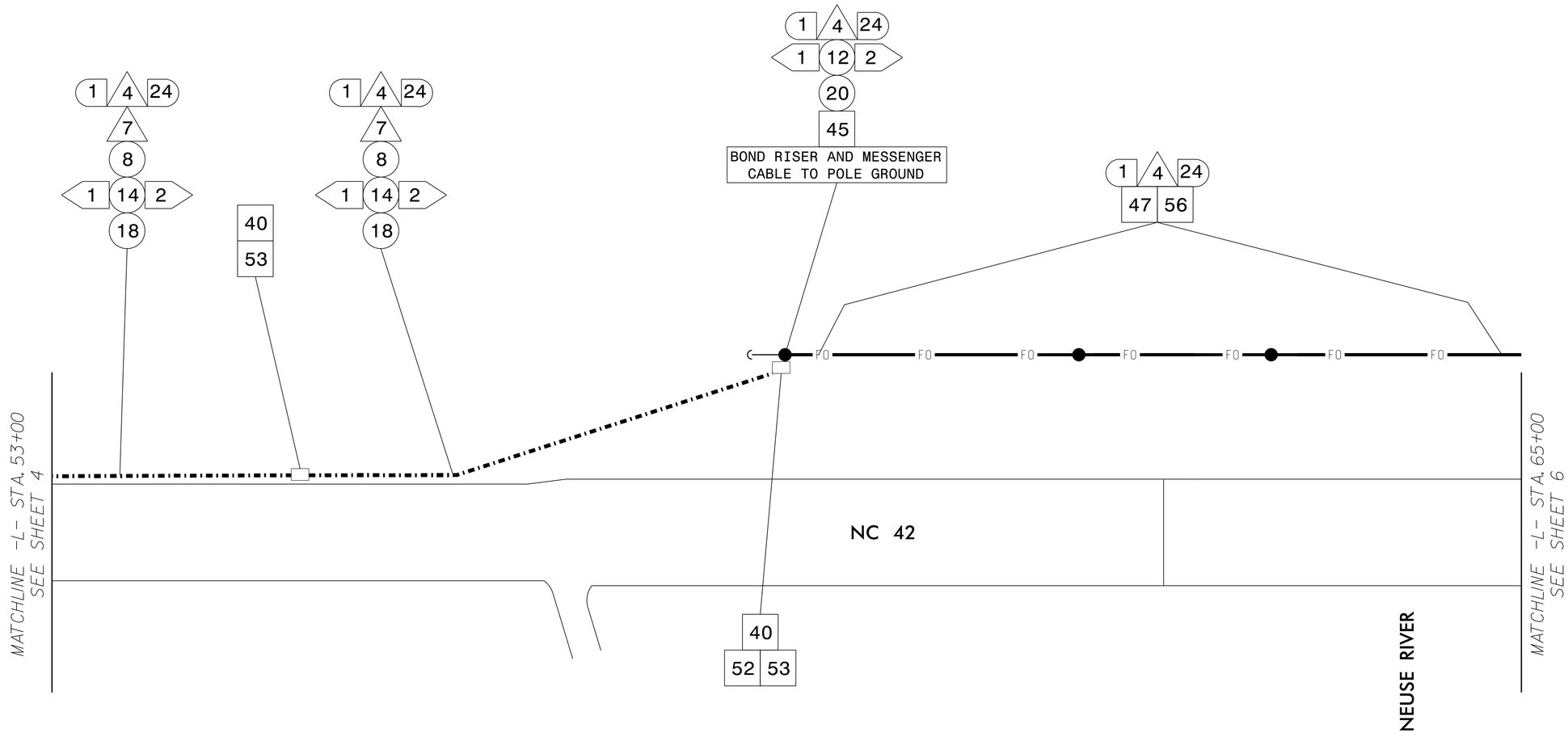

NOTES:

1. ALL CABLE ATTACHMENT POINTS ARE 40" BELOW NEUTRAL UNLESS OTHERWISE NOTED.

2. NOTIFY THE NCDOT DIVISION 4 TRAFFIC ENGINEER, ANDY BROWN, AT (252) 640–6505 EXT 3544, FIVE (5) DAYS PRIOR TO BEGINNING WORK ON SIGNAL SYSTEM COMMUNICATIONS CABLE. NOTIFY THE DIVISION 4 TRAFFIC ENGINEER AFTER ALL WORK IS PERFORMED. ALL WORK IS NOT COMPLETE UNTIL THE SIGNAL SYSTEM IS OPERATIONAL.

Prepared by
URS
URS Corporation – North Carolina
1600 Perimeter Park Drive
Morrisville, North Carolina 27560
TELEPHONE (919) 461-1100 FAX (919) 461-1415
NC LICENSE • C-2243

Prepared for the Offices of:
Transportation Mobility and Safety Division
STATE OF NORTH CAROLINA DEPARTMENT OF TRANSPORTATION
Intelligent Transportation Systems Section
750 N. Greenfield Pkwy., Garner, NC 27529

SCALE 0 50 1"=50'

Communications Cable and Conduit Routing Plans

Division 4 Johnston County Clayton

PLAN DATE: January 2018 REVIEWED BY: C. L. Kalencik
PREPARED BY: S. W. Cox REVIEWED BY:

REVISIONS	INIT.	DATE

DOCUMENT NOT CONSIDERED FINAL UNLESS ALL SIGNATURES COMPLETED

SEAL
NORTH CAROLINA PROFESSIONAL SEAL 37856 ENGINEER STEVEN W. COX
DocuSigned by: Steven Cox 2AFA2897734149C...
5/25/2018

CADD Filename:

5/25/2018
L:\Morrisville\Jobs\R3825B\Traffic\Signals\R3825B SCP-5.dgn
coxsl

DocuSign Envelope ID: A07F78AB-D1C0-4758-9080-F3EDB5313497

PROJECT REFERENCE NO.	SHEET NO.
R-3825B	SCP-6

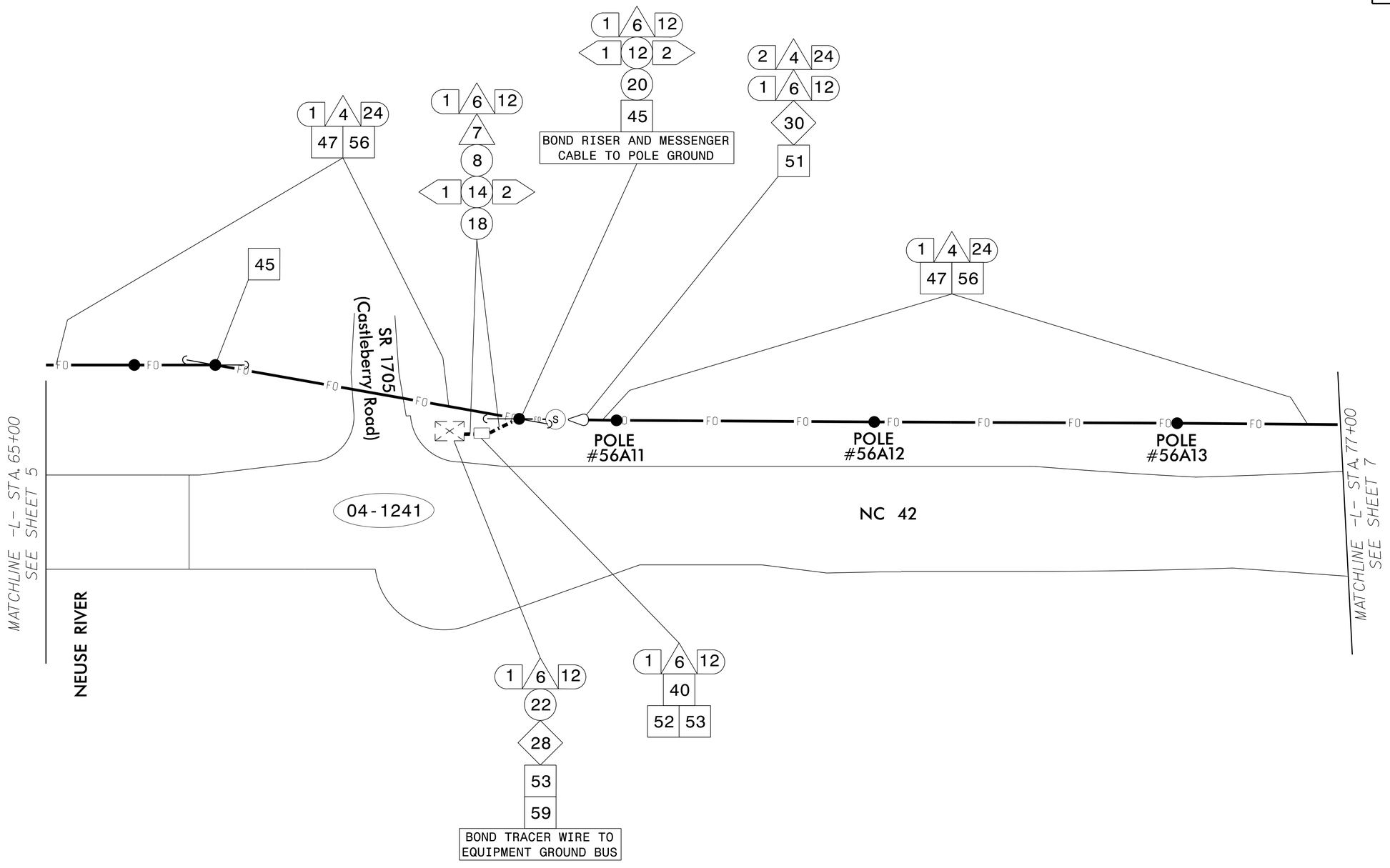

NOTES:

1. ALL CABLE ATTACHMENT POINTS ARE 40" BELOW NEUTRAL UNLESS OTHERWISE NOTED.

2. NOTIFY THE NCDOT DIVISION 4 TRAFFIC ENGINEER, ANDY BROWN, AT (252) 640–6505 EXT 3544, FIVE (5) DAYS PRIOR TO BEGINNING WORK ON SIGNAL SYSTEM COMMUNICATIONS CABLE. NOTIFY THE DIVISION 4 TRAFFIC ENGINEER AFTER ALL WORK IS PERFORMED. ALL WORK IS NOT COMPLETE UNTIL THE SIGNAL SYSTEM IS OPERATIONAL.

Prepared by
URS
URS Corporation – North Carolina
1600 Perimeter Park Drive
Morrisville, North Carolina 27560
TELEPHONE (919) 461-1100 FAX (919) 461-1415
NC LICENSE # C-2243

Prepared for the Offices of:
Transportation Mobility and Safety Division
Traffic Engineering Branch
STATE OF NORTH CAROLINA DEPARTMENT OF TRANSPORTATION
750 N. Greenfield Pkwy., Garner, NC 27529

SCALE 0 50 1"=50'

Communications Cable and Conduit Routing Plans

Division 4 Johnston County Clayton

PLAN DATE: January 2018 REVIEWED BY: C. L. Kalencik
PREPARED BY: S. W. Cox REVIEWED BY:

REVISIONS	INIT.	DATE

DOCUMENT NOT CONSIDERED FINAL UNLESS ALL SIGNATURES COMPLETED

SEAL
NORTH CAROLINA PROFESSIONAL SEAL 37856 ENGINEER STEVEN W. COX
DocuSigned by: Steven Cox 2AFA2897734149C...
5/25/2018

CADD Filename:

5/25/2018
L:\Alvr\civil\Jobs\R3825B\Traffic\Signals\R3825B SCP-6.dgn
coxsl

DocuSign Envelope ID: A07F78AB-D1C0-4758-9080-F3EDB5313497

PROJECT REFERENCE NO.	SHEET NO.
R-3825B	SCP-7

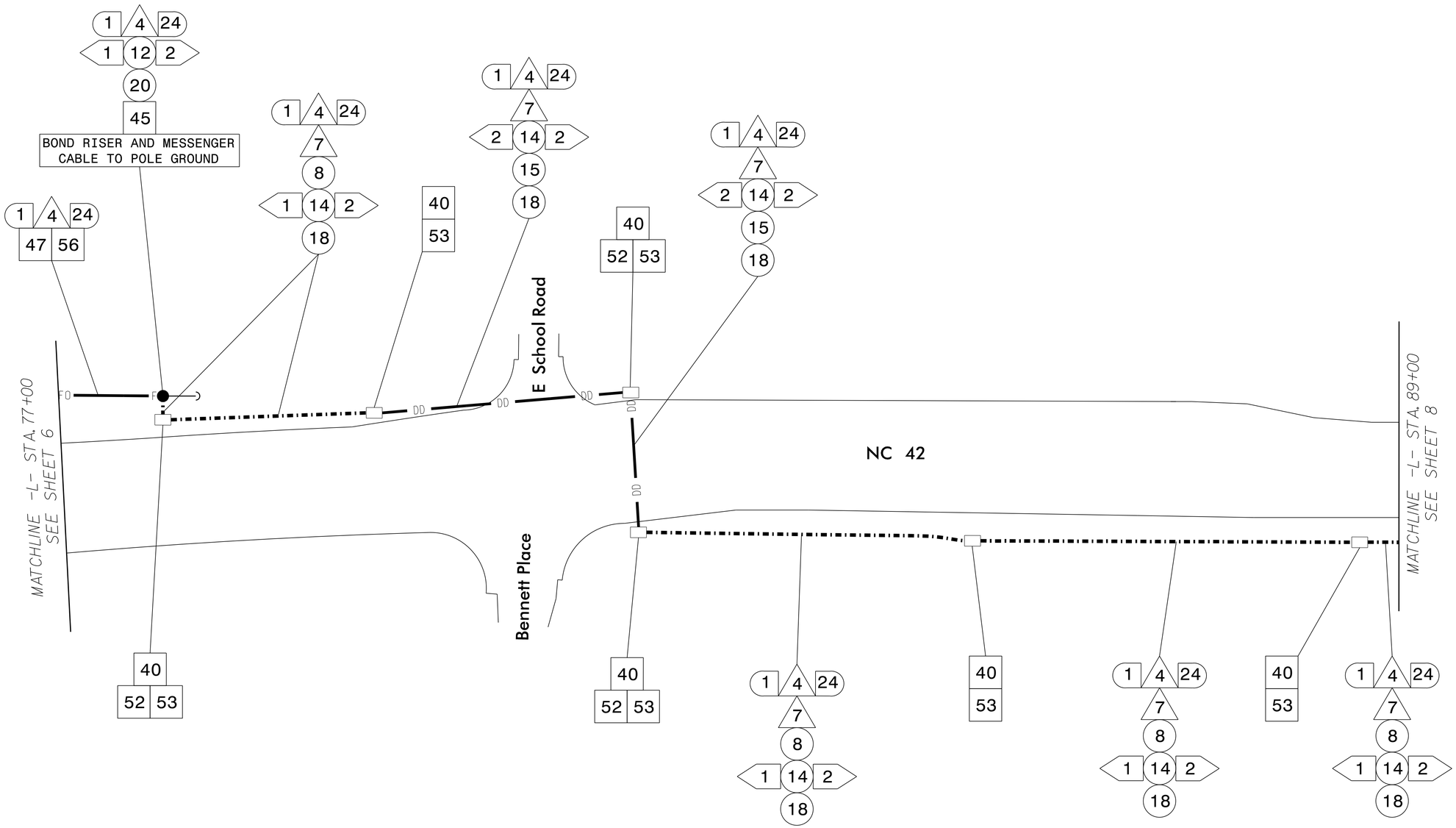

NOTES:

1. ALL CABLE ATTACHMENT POINTS ARE 40" BELOW NEUTRAL UNLESS OTHERWISE NOTED.

2. NOTIFY THE NCDOT DIVISION 4 TRAFFIC ENGINEER, ANDY BROWN, AT (252) 640–6505 EXT 3544, FIVE (5) DAYS PRIOR TO BEGINNING WORK ON SIGNAL SYSTEM COMMUNICATIONS CABLE. NOTIFY THE DIVISION 4 TRAFFIC ENGINEER AFTER ALL WORK IS PERFORMED. ALL WORK IS NOT COMPLETE UNTIL THE SIGNAL SYSTEM IS OPERATIONAL.

Prepared by
URS
URS Corporation – North Carolina
1600 Perimeter Park Drive
Morrisville, North Carolina 27560
TELEPHONE (919) 461-1100 FAX (919) 461-1415
NC LICENSE • C-2243

Prepared for the Offices of:
Transportation Mobility and Safety Division
STATE OF NORTH CAROLINA
DEPARTMENT OF TRANSPORTATION
Intermodal Transportation Planning Section
750 N. Greenfield Pkwy., Garner, NC 27529

SCALE 0 50 1"=50'

Communications Cable and Conduit Routing Plans

Division 4 Johnston County Clayton

PLAN DATE: January 2018 REVIEWED BY: C. L. Kalencik
PREPARED BY: S. W. Cox REVIEWED BY:

REVISIONS	INIT.	DATE

DOCUMENT NOT CONSIDERED FINAL UNLESS ALL SIGNATURES COMPLETED

SEAL
NORTH CAROLINA PROFESSIONAL SEAL 37856 ENGINEER STEVEN W. COX
DocuSigned by: Steven Cox 2AFA2897734149C...
5/25/2018

CADD Filename:

5/25/2018
L:\Mcrifsville\Jobs\R3825B\Traffic\Signals\R3825B SCP-7.dgn
coxsl

DocuSign Envelope ID: A07F78AB-D1C0-4758-9080-F3EDB5313497

PROJECT REFERENCE NO.	SHEET NO.
R-3825B	SCP-8

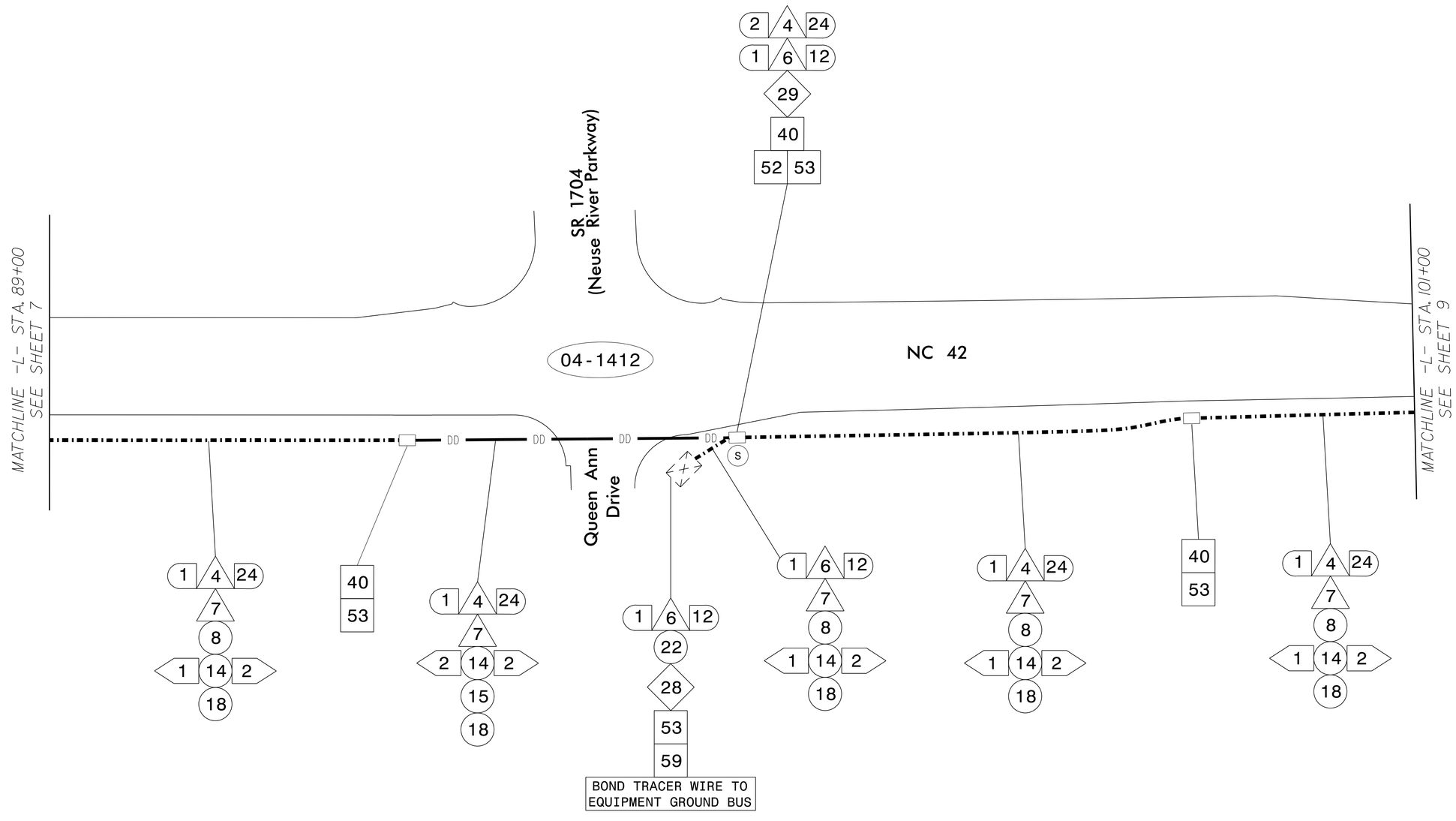

NOTES:

1. ALL CABLE ATTACHMENT POINTS ARE 40" BELOW NEUTRAL UNLESS OTHERWISE NOTED.

2. NOTIFY THE NCDOT DIVISION 4 TRAFFIC ENGINEER, ANDY BROWN, AT (252) 640–6505 EXT 3544, FIVE (5) DAYS PRIOR TO BEGINNING WORK ON SIGNAL SYSTEM COMMUNICATIONS CABLE. NOTIFY THE DIVISION 4 TRAFFIC ENGINEER AFTER ALL WORK IS PERFORMED. ALL WORK IS NOT COMPLETE UNTIL THE SIGNAL SYSTEM IS OPERATIONAL.

Prepared by
URS
URS Corporation – North Carolina
1600 Perimeter Park Drive
Morrisville, North Carolina 27560
TELEPHONE (919) 461-1100 FAX (919) 461-1415
NC LICENSE • C-2243

Prepared for the Offices of:
Transportation Mobility and Safety Division
STATE OF NORTH CAROLINA
DEPARTMENT OF TRANSPORTATION
Intelligent Transportation Systems Section
750 N. Greenfield Pkwy., Garner, NC 27529

SCALE 0 50 1"=50'

Communications Cable and Conduit Routing Plans

Division 4 Johnston County Clayton

PLAN DATE:	January 2018	REVIEWED BY:	C. L. Kalencik
PREPARED BY:	S. W. Cox	REVIEWED BY:	

REVISIONS	INIT.	DATE

DOCUMENT NOT CONSIDERED FINAL UNLESS ALL SIGNATURES COMPLETED

SEAL
NORTH CAROLINA PROFESSIONAL SEAL 37856 ENGINEER STEVEN W. COX
DocuSigned by: Steven Cox 2AFA289773A149C...
5/25/2018

CADD Filename:

5/25/2018
L:\WGCTS\Sville\Jobs\R3825B\Traffic\Signals\R3825B SCP-8.dgn
Coxsi