DocuSign Envelope ID: 2AA28B1E-010E-47D3-AE41-230AB0F47E26

NOTES

STIRRUPS IN CAP MAY BE SHIFTED AS NECESSARY TO CLEAR ANCHOR BOLTS.

BACKWALL SHALL BE PLACED BEFORE APPLYING THE EPOXY PROTECTIVE COATING.

THE TOP SURFACE AREAS OF THE END BENT CAP SHALL BE CURED IN ACCORDANCE WITH THE STANDARD SPECIFICATIONS EXCEPT THE MEMBRANE CURING COMPOUND METHOD SHALL NOT BE USED.

THE TOP SURFACE OF THE CAP EXCEPT THE BRIDGE SEAT BUILDUPS SHALL BE SLOPED TRANSVERSELY FROM THE FILL FACE TO THE BACK FACE AT THE RATE OF 2%.

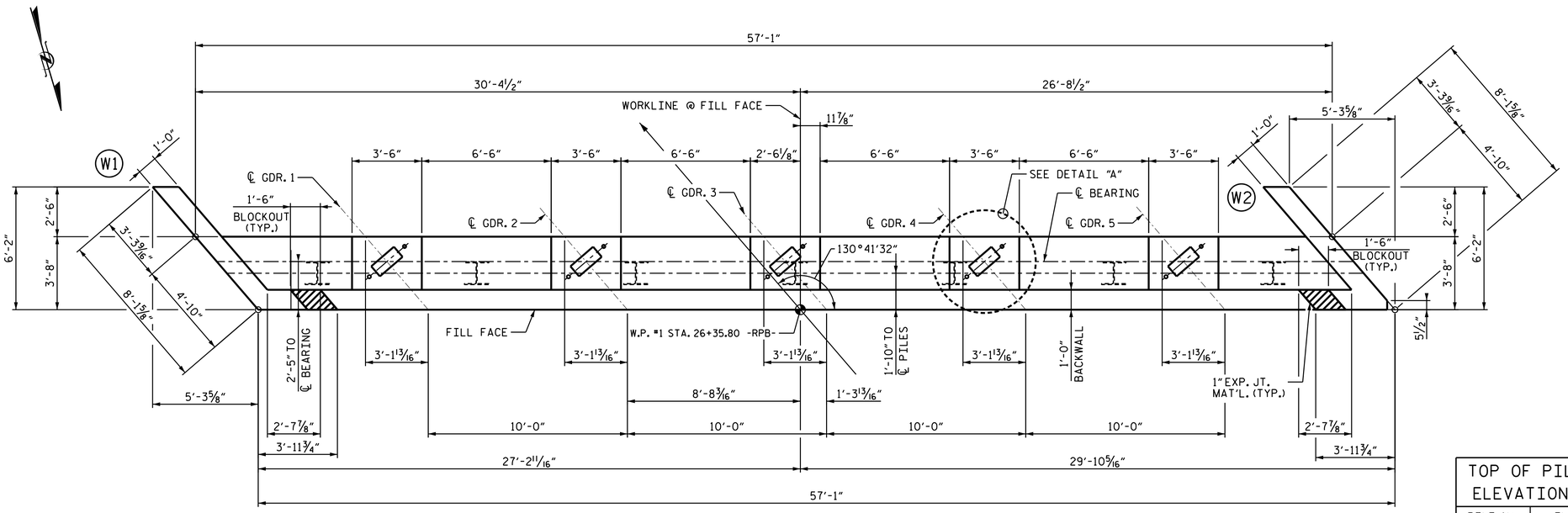

PLAN

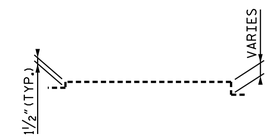

DETAIL B

TOP OF PILE ELEVATIONS	
PILE No.	EL.
P1 - P7	228.16

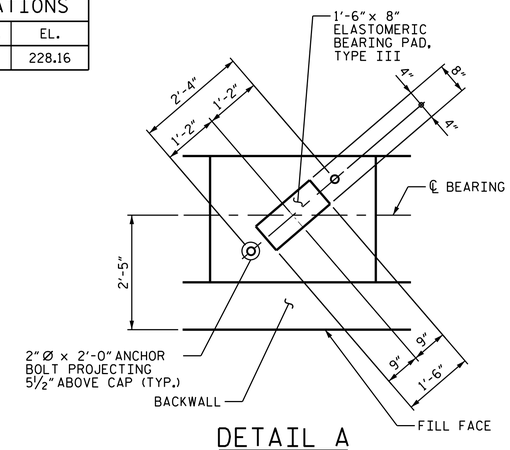

DETAIL A

(ALL DIMENSIONS TYPICAL AT EACH BEARING)

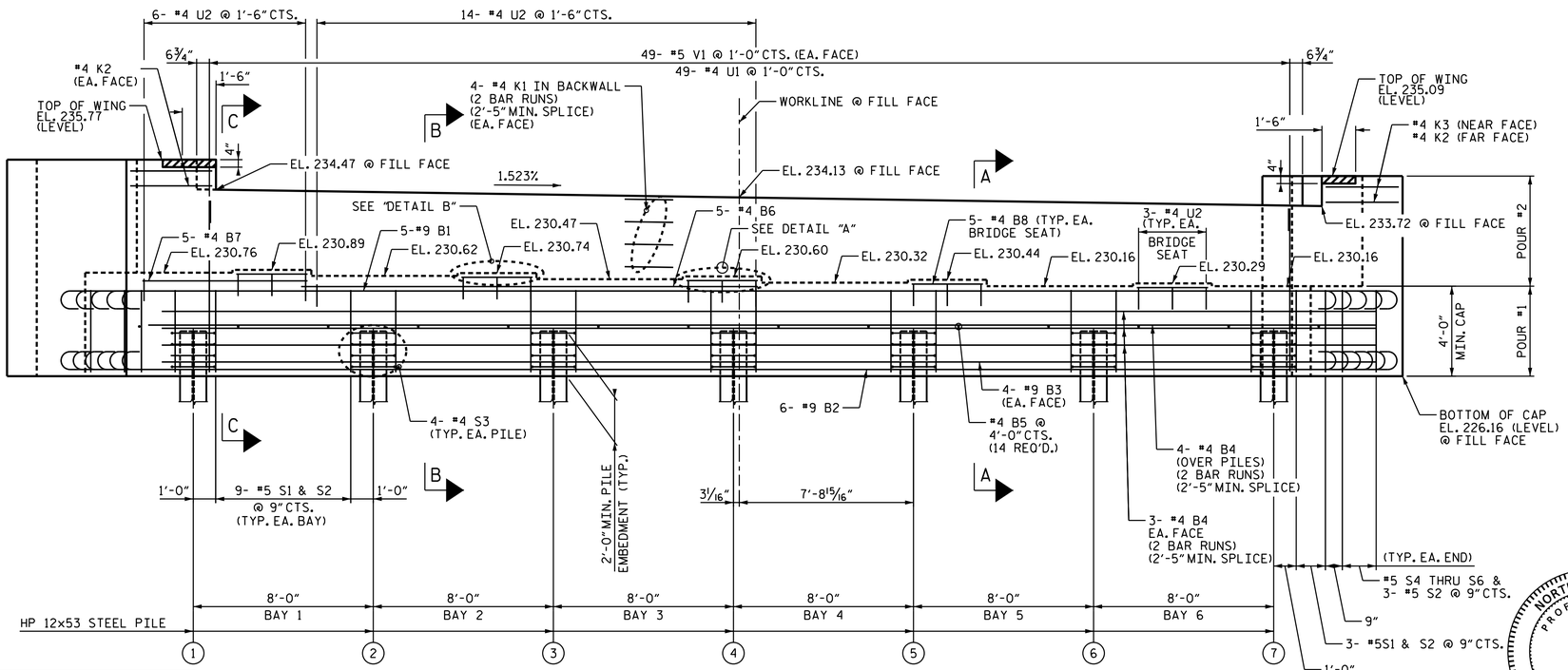

ELEVATION

PROJECT NO. U-4405

CUMBERLAND COUNTY

STATION: 26+78.00 -RPB-

SHEET 1 OF 3

STATE OF NORTH CAROLINA
DEPARTMENT OF TRANSPORTATION
RALEIGH

SUBSTRUCTURE

END BENT #1

NORTH CAROLINA PROFESSIONAL SEAL 043571 ENGINEER SAMUEL L. CULLUM

DocuSigned by: Samuel L. Cullum 19C97095C75A467...

6/6/2018 12:30:46 PM PDT

DOCUMENT NOT CONSIDERED FINAL UNLESS ALL SIGNATURES COMPLETED

KCA KISINGER CAMPO & ASSOCIATES
4800 SIX FORKS ROAD SUITE 120
RALEIGH, NC 27609
(919) 882-7839

DRAWN BY :	J. B. HANNA	DATE :	05-17
CHECKED BY :	S. BOYD	DATE :	05-17
DESIGN ENGINEER OF RECORD:	S. CULLUM	DATE :	05-17

REVISIONS							SHEET NO.
NO.	BY:	DATE:	NO.	BY:	DATE:		S-17
1			3				TOTAL SHEETS
2			4				26

6/6/2018
Z:\Tampa\FDOT\4201512.06_NC-U4405\Structures\401_085_U4405_SMU_E1_250440.dgn
User:scullum