PROJECT REFERENCE NO.	SHEET NO.
U-4405	UC-03P
DESIGNED BY: AMH	8/3/2018
DRAWN BY: AMH/AB	
CHECKED BY: AMH	
APPROVED BY: MWF	
REVISED:	
NORTH CAROLINA DEPARTMENT OF TRANSPORTATION	
UTILITIES ENGINEERING SEC. PHONE:(919)707-6690 FAX:(919)250-4151	UTILITY CONSTRUCTION PLANS ONLY

NORTH CAROLINA PROFESSIONAL ENGINEER SEAL 025490 MARK W. FISHER

UTILITY CONSTRUCTION

NOTE:

ANY REFERENCE TO FAYPWC PROJECT COORDINATOR, PWC COORDINATOR OR FAYPWC (FAYETTEVILLE PUBLIC WORKS COMMISSION) SHALL BE INTERPRETTED AS A REFERENCE TO THE ENGINEER.

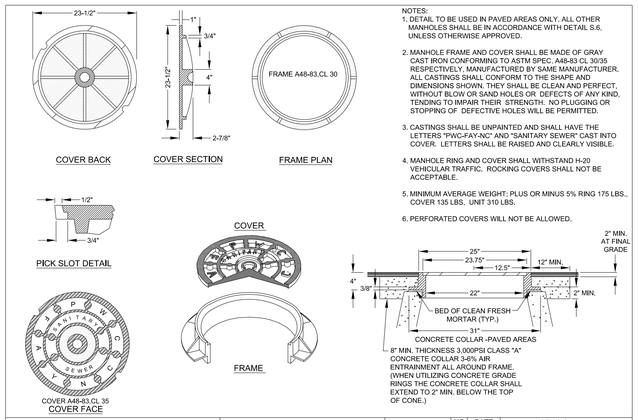

NOTES:
1. DETAIL TO BE USED IN PAVED AREAS ONLY. ALL OTHER MANHOLES SHALL BE IN ACCORDANCE WITH DETAIL S.6, UNLESS OTHERWISE APPROVED.
2. MANHOLE FRAME AND COVER SHALL BE MADE OF GRAY CAST IRON CONFORMING TO ASTM SPEC. A48-83 CL 30/35 RESPECTIVELY, MANUFACTURED BY SAME MANUFACTURER. ALL CASTINGS SHALL CONFORM TO THE SHAPE AND DIMENSIONS SHOWN. THEY SHALL BE CLEAN AND PERFECT, WITHOUT BLOW OR SAND HOLES OR DEFECTS OF ANY KIND, TENDING TO IMPAIR THEIR STRENGTH. NO PLUGGING OR STOPPING OF DEFECTIVE HOLES WILL BE PERMITTED.
3. CASTINGS SHALL BE UNPAINTED AND SHALL HAVE THE LETTERS "PWC-FAY-NC" AND "SANITARY SEWER" CAST INTO COVER. LETTERS SHALL BE RAISED AND CLEARLY VISIBLE.
4. MANHOLE RING AND COVER SHALL WITHSTAND H-20 VEHICULAR TRAFFIC. ROCKING COVERS SHALL NOT BE ACCEPTABLE.
5. MINIMUM AVERAGE WEIGHT: PLUS OR MINUS 5% RING 175 LBS., COVER 135 LBS, UNIT 310 LBS.
6. PERFORATED COVERS WILL NOT BE ALLOWED.

STANDARD TRAFFIC AREA MANHOLE RING AND COVER N.T.S.			FAYETTEVILLE PUBLIC WORKS COMMISSION FAYETTEVILLE, N.C.	NO.	DATE	REVISION
SHEET NO. 1 OF 1	DWG. NO. S.7	DWG. BY: FAYPWC	WATER RESOURCES ENGINEERING DEPARTMENT	1	01/05	CHANGED NON TRAFFIC DETAIL
	DATE: JAN. 01, 2018	APPROVED BY: JEG		2	07/06	ADDED NOTE ON CONCRETE COLLAR
				3	02/07	REMOVED NON TRAFFIC AREA AND REVISED NOTES
				4	07/08	REVISED ASPHALT THICKNESS

S7-RING-COVER.dwg

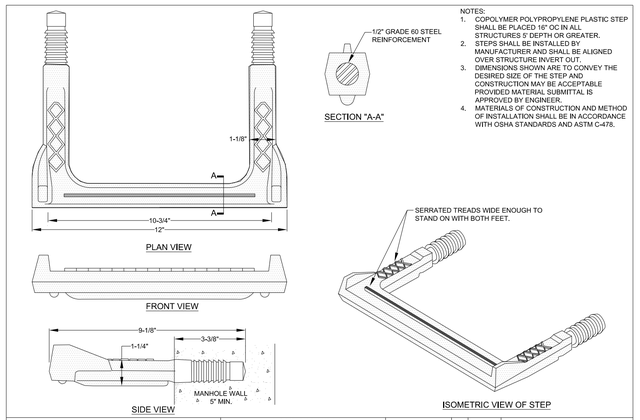

NOTES:
1. COPOLYMER POLYPROPYLENE PLASTIC STEP SHALL BE PLACED 18" OC IN ALL STRUCTURES 5' DEPTH OR GREATER.
2. STEPS SHALL BE INSTALLED BY MANUFACTURER AND SHALL BE ALIGNED OVER STRUCTURE INVERT OUT. DIMENSIONS SHOWN ARE TO CONVEY THE DESIRED SIZE OF THE STEP AND CONSTRUCTION MAY BE ACCEPTABLE PROVIDED MATERIAL SUBMITTAL IS APPROVED BY ENGINEER.
4. MATERIALS OF CONSTRUCTION AND METHOD OF INSTALLATION SHALL BE IN ACCORDANCE WITH OSHA STANDARDS AND ASTM C-478.

STRUCTURE STEP N.T.S.			FAYETTEVILLE PUBLIC WORKS COMMISSION FAYETTEVILLE, N.C.	NO.	DATE	REVISION
SHEET NO. 1 OF 1	DWG. NO. S.8	DWG. BY: FAYPWC	WATER RESOURCES ENGINEERING DEPARTMENT	1	05/29/18	REVISED NOTE 3 FOR NCDOT U-4405.
	DATE: JAN. 01, 2018	APPROVED BY: J.E.G.				

S8-STEP.dwg

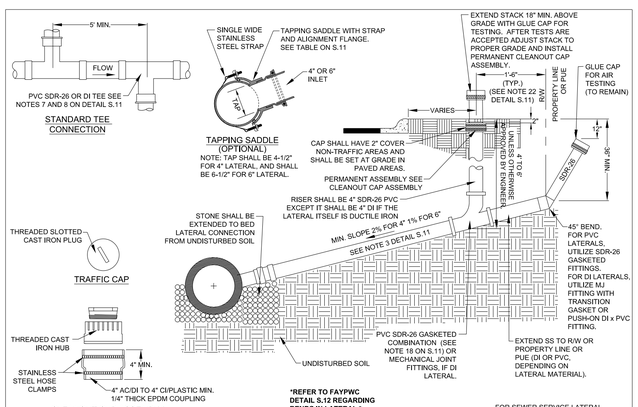

SEWER SERVICE LATERAL (4-INCH AND 6-INCH) N.T.S.			FAYETTEVILLE PUBLIC WORKS COMMISSION FAYETTEVILLE, N.C.	NO.	DATE	REVISION
SHEET NO. 1 OF 1	DWG. NO. S.10	DWG. BY: FAYPWC	WATER RESOURCES ENGINEERING DEPARTMENT	2	01/14	ADDED TAILPIECE, NOTES
	DATE: JAN. 01, 2018	APPROVED BY: JEG		3	01/15	REVISED NOTES RE: TAILPIECE
				4	05/29/18	REVISED CALLOUTS FOR NCDOT U-4405

S10-RESSLAT.dwg

SEWER SERVICE LATERAL NOTES

1. HOLE IN SANITARY SEWER MAIN MUST BE CUT WITH SHELL CUTTER NO HAMMER TAPS ALLOWED.
2. LATERAL SHALL CONFORM TO ASTM SPECS. D-3034 SDR-26 UNLESS OTHERWISE INDICATED AS DI.
3. ALL PIPE AND FITTINGS SHALL BE 4" OR 6" UNLESS OTHERWISE SPECIFIED.
4. ALL DI PIPE SHALL HAVE AN INTERIOR LINING OF CERAMIC EPOXY, THE ENTIRE DI LATERAL SHALL BE COMPRISED OF DI PIPE AND MECHANICAL JOINT FITTINGS.
5. ALL CONNECTIONS SHALL HAVE RUBBER GASKET SEALS INSTALLED.
6. SANITARY SEWER SERVICE CLEANOUT STACK SHALL BE LOCATED 18" FROM WATER SERVICE LOCK VALVE WHEN IN THE SAME DITCH.
7. INSTALLATION OTHER THAN AS SHOWN MUST BE APPROVED BY THE ENGINEER.
8. CONNECTIONS TO THE TOP OF MAIN SHALL NOT BE ALLOWED, UNLESS OTHERWISE APPROVED BY THE ENGINEER.
9. SLOPE AND DEPTH OF THE SERVICE LATERAL SHALL BE DETERMINED BY THE TOPOGRAPHY OF THE LOT AS APPROVED BY THE ENGINEER OR AS INDICATED ON THE DRAWINGS.
10. LATERAL SHALL CONFORM TO THE 2% MINIMUM SLOPE FOR THE 4" OR THE 1% MINIMUM SLOPE FOR THE 6". MAXIMUM CLEANOUT SPACING FOR 4" PIPE 75', 6" PIPE 100'.
11. SEE INTERIOR DROP STRUCTURE OR SLIDE, MORTAR SLIDE AND SHELF DETAIL FOR VERTICAL DROPS OF MAINS AND LATERALS.
12. LATERALS LESS THAN 3' IN DEPTH OR GREATER THAN 20' DEPTH SHALL UTILIZE DUCTILE IRON PIPE AND FITTINGS WITH CERAMIC EPOXY, OR WHEN SEPARATION REQUIREMENTS CANNOT BE MET.
13. ENTIRE SEWER LATERAL ASSEMBLY SHALL BE AIR TESTED CONCURRENTLY WITH SEWER MAIN.
14. INDIVIDUAL LATERALS SHALL BE CLEANED AND FLUSHED PRIOR TO FLUSHING SANITARY SEWER MAINS.
15. LATERAL SHALL NOT BE BACK-FILLED UNTIL INSPECTED BY THE ENGINEER.
16. WYE CONNECTIONS SHALL NOT BE USED TO TIE LATERALS INTO A MANHOLE.
17. IF BENDS ARE APPROVED BY THE ENGINEER, STONE BEDDING IS REQUIRED TO BE INSTALLED FROM UNDISTURBED (SEE DETAIL S.12) SOIL TO BOTTOM OF BEND.
18. PVC COMBINATION SHALL BE A MOLDED WYE AND BEND, GASKETED, SDR-26, AS MANUFACTURED BY HARCO, GPK OR APPROVED EQUAL.
19. NO MORE THAN 4, FOUR INCH LATERALS OR 3, SIX INCH LATERALS SHALL ENTER A 4' DIAMETER TERMINAL MANHOLE. NO MORE THAN 2 LATERALS (REGARDLESS OF SIZE) SHALL ENTER ALL OTHER 4' DIAMETER MANHOLES. ALL LATERALS SHALL HAVE AN INDIVIDUAL TROUGH. 5' DIAMETER MANHOLES SHALL BE USED IF THE ABOVE CONDITIONS ARE NOT MET.
20. ALL LATERALS (4" AND 6") SHALL UTILIZE A 4" RISER (STACK).
21. REFER TO DETAIL S.12 FOR SEPARATION REQUIREMENTS.
22. FOR SINGLE FAMILY RESIDENTIAL LOTS, CLEANOUT SHALL BE LOCATED 18' FROM RIGHT-OF-WAY OR EASEMENT. FOR ALL NON-SINGLE FAMILY LOTS, CLEANOUT SHALL BE NO CLOSER THAN 10' TO FRONT OF BUILDING, UNLESS OTHERWISE APPROVED BY ENGINEER.

THE FOLLOWING TABLE SUMMARIZES THE MATERIALS TO BE UTILIZED FOR SEWER MAIN TO LATERAL CONNECTIONS:

	PVC Main	DI Main
DI Lateral	DI fitting or approved saddle	MJ fitting or approved saddle
PVC Lateral	PVC fitting or approved saddle	MJ fitting with transition gasket or approved saddle

NOTE: REFER TO SPECIAL PROVISIONS FOR ADDITIONAL INFORMATION.

SEWER SERVICE LATERAL NOTES (4-INCH AND 6-INCH)			FAYETTEVILLE PUBLIC WORKS COMMISSION FAYETTEVILLE, N.C.	NO.	DATE	REVISION
SHEET NO. 1 OF 1	DWG. NO. S.11	DWG. BY: FAYPWC	WATER RESOURCES ENGINEERING DEPARTMENT	3	01/13	REVISED NOTES AND ADDED TABLE
	DATE: JAN. 01, 2018	APPROVED BY: JEG		4	01/15	REVISED NOTE 22, TABLE
				5	05/29/18	REVISED NOTE 4, 7, 8, 12, 17 AND 22 FOR NCDOT U-4405

S11-RESSLAT-NOTES.dwg

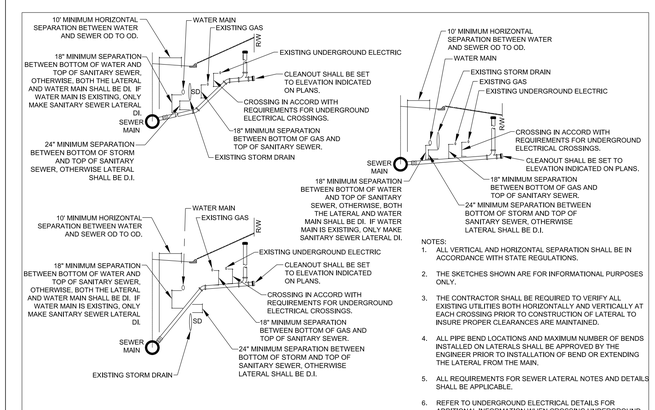

NOTES:
1. ALL VERTICAL AND HORIZONTAL SEPARATION SHALL BE IN ACCORDANCE WITH STATE REGULATIONS.
2. THE SKETCHES SHOWN ARE FOR INFORMATIONAL PURPOSES ONLY.
3. THE CONTRACTOR SHALL BE REQUIRED TO VERIFY ALL EXISTING UTILITIES BOTH HORIZONTALLY AND VERTICALLY AT EACH CROSSING PRIOR TO CONSTRUCTION OF LATERAL TO INSURE PROPER CLEARANCES ARE MAINTAINED.
4. ALL PIPE BEND LOCATIONS AND MAXIMUM NUMBER OF BENDS INSTALLED ON LATERALS SHALL BE APPROVED BY THE ENGINEER PRIOR TO INSTALLATION OF BEND OR EXTENDING THE LATERAL FROM THE MAIN.
5. ALL REQUIREMENTS FOR SEWER LATERAL NOTES AND DETAILS SHALL BE APPLICABLE.
6. REFER TO UNDERGROUND ELECTRICAL DETAILS FOR ADDITIONAL INFORMATION WHEN CROSSING UNDERGROUND ELECTRICAL FACILITIES.

SEWER SERVICE LATERAL UTILITY CONFLICT SEPARATION REQUIREMENTS N.T.S.			FAYETTEVILLE PUBLIC WORKS COMMISSION FAYETTEVILLE, N.C.	NO.	DATE	REVISION
SHEET NO. 1 OF 1	DWG. NO. S.12	DWG. BY: FAYPWC	WATER RESOURCES ENGINEERING DEPARTMENT	2	11/06	ADDED NOTE ON DI LATERALS
	DATE: JAN. 01, 2018	APPROVED BY:		3	03/10	ADDED LATERAL AND WM SEPARATION
				4	05/29/18	REVISED NOTE 4 FOR NCDOT U-4405

S12-UTIL-CONFLICT.dwg

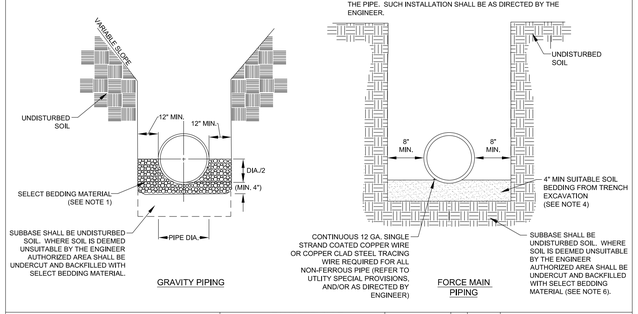

NOTES:
1. THE SELECT BEDDING MATERIAL SHALL BE WELL GRADED CRUSHED ROCK (NO. 5 OR NO. 57 STONE) FOR THE FULL WIDTH OF THE TRENCH.
2. SELECT BEDDING MATERIAL SHALL EXTEND TO UNDISTURBED TRENCH WALLS.
3. SELECT BEDDING MATERIAL SHALL BE PROPERLY PLACED TO THE SPRING LINE OF THE PIPE FOR ITS ENTIRE LENGTH.
4. SUITABLE SOIL BEDDING IS DEFINED AS "NATIVE" SOIL EXCAVATED FROM THE TRENCH, FREE OF ROCKS, FOREIGN MATERIAL, AND FROZEN EARTH.
5. SUITABLE BEDDING MATERIAL SHALL EXTEND TO UNDISTURBED TRENCH WALLS.
6. IF GROUND CONDITIONS WARRANT, IT MAY BE NECESSARY TO BED DUCTILE IRON FORCE MAINS IN SELECT BEDDING MATERIAL (NO. 5 OR NO. 57 STONE) TO THE SPRINGLINE OF THE PIPE. SUCH INSTALLATION SHALL BE AS DIRECTED BY THE ENGINEER.

SEWER BEDDING N.T.S.			FAYETTEVILLE PUBLIC WORKS COMMISSION FAYETTEVILLE, N.C.	NO.	DATE	REVISION
SHEET NO. 1 OF 1	DWG. NO. S.13	DWG. BY: FAYPWC	WATER RESOURCES ENGINEERING DEPARTMENT	1	01/01/05	REVISED NOTES
	DATE: JAN. 01, 2018	APPROVED BY: J.E.G.		2	01/01/16	REVISED NOTES
				3	07/24/18	REVISED NOTES AND CALL OUTS FOR FOR NCDOT U-4405.

S13-SEWER-BEDDING.dwg

NOTES:
1. SANITARY SEWER REPAIR SHALL BE APPROVED BY ENGINEER PRIOR TO MAKING THE REPAIR. IF THE REPAIR IS WITHIN 20' OF AN EXISTING MANHOLE, THE CONTRACTOR SHALL BE REQUIRED TO REMOVE AND RELAY PIPE TO NEAREST MANHOLE, UNLESS OTHERWISE DIRECTED BY ENGINEER.
2. ALL MATERIALS OF CONSTRUCTION SHALL BE IN ACCORDANCE WITH THE UTILITY SPECIAL PROVISIONS.
3. CONTRACTOR SHALL PROVIDE ALL NECESSARY PUMPS, HEADER PIPE, PUMPING EQUIPMENT, ETC. PRIOR TO BEGINNING CONSTRUCTION. DUPLICATE SEWAGE HANDLING PUMPS, PIPING, ETC. SHALL BE ON-SITE AND AVAILABLE FOR IMMEDIATE USE SHOULD PRIMARY PUMP OR FORCE MAIN FAIL. INSURE PUMPS, HEADER PIPING, ETC. ARE PROPERLY SIZED AND OPERATIONAL BEFORE BEGINNING WORK.
4. PIPE REPAIR SHALL EXHIBIT STRAIGHT HORIZONTAL ALIGNMENT AND INVERT SHALL BE THE SAME AS THE EXISTING PIPE SLOPE. DEFLECTIONS OF HORIZONTAL AND VERTICAL ALIGNMENT ARE NOT ACCEPTABLE.
5. PIPE SHALL BE BACKFILLED AND COMPACTED IN ACCORDANCE WITH THE UTILITY SPECIAL PROVISIONS.
6. REPLACEMENT PIPE SHALL BE PROPERLY BEDDED IN ACCORDANCE WITH STANDARD DETAIL S.13.
7. THERE SHALL BE NO MORE THAN 1/4" SPACE BETWEEN THE EXISTING SEWER MAIN AND THE REPLACEMENT PIPE AT EACH END.
8. DAMAGED SECTION SHALL BE CUT OUT WITHOUT DAMAGING THE PIPE TO REMAIN.
9. DI SEWER PIPE AND FITTINGS SHALL HAVE AN INTERIOR COATING OF CERAMIC EPOXY.
10. DI PIPE SHALL BE UTILIZED WHEN STATE MINIMUM SEPARATION REQUIREMENTS CANNOT BE MET OR AS DIRECTED BY ENGINEER.
11. PIPE REPAIRS ON MATERIALS OTHER THAN SHOWN, SHALL BE AS DIRECTED BY ENGINEER.
12. THE MINIMUM LENGTH OF REPAIR SHALL BE 5 FEET, UNLESS OTHERWISE DIRECTED BY ENGINEER.

GRAVITY SANITARY SEWER PIPE REPAIR N.T.S.			FAYETTEVILLE PUBLIC WORKS COMMISSION FAYETTEVILLE, N.C.	NO.	DATE	REVISION
SHEET NO. 1 OF 3	DWG. NO. S.15	DWG. BY: FAYPWC	WATER RESOURCES ENGINEERING DEPARTMENT	1	01/05	REVISED REPLACEMENT PIPE
	DATE: JAN. 01, 2018	APPROVED BY: J.E.G.		2	07/11	REVISED NOTES
				3	07/24/18	REVISED NOTES 1, 2, 5, 9, 10, 11 AND 12 FOR NCDOT U-4405

S15-VCP-REPAIR.dwg

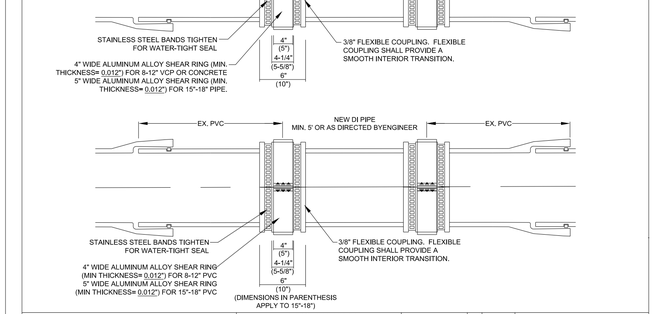

GRAVITY SANITARY SEWER PIPE REPAIR N.T.S.			FAYETTEVILLE PUBLIC WORKS COMMISSION FAYETTEVILLE, N.C.	NO.	DATE	REVISION
SHEET NO. 2 OF 3	DWG. NO. S.15	DWG. BY: FAYPWC	WATER RESOURCES ENGINEERING DEPARTMENT	1	01/05	REVISED REPLACEMENT PIPE
	DATE: JAN. 01, 2018	APPROVED BY: J.E.G.		2	07/11	REVISED NOTES
				3	05/29/18	REVISED CALLOUTS FOR NCDOT U-4405.

S15-VCP-REPAIR.dwg

REVISIONS

UTILITY REV. - JULY 24,2018 - REVISIONS TO DETAIL SHEETS

02-AUG-2018 10:37
L:\Fayetteville Public Works Commission\2015017700RA Raeford Road NCDOT U 4405\CADD\NCDOT PLANS\Utilities\Engineering\UC\Proj\Detail Sheets\u4405_ut_dtl_UC031-0.dgn