DocuSign Envelope ID: 1886D70A-4CD7-4F67-AFEF-5A3D1D5E98B8

PROJECT REFERENCE NO.	SHEET NO.
U-2412A	Sig. 10.1

EDI MODEL 2018ECLip-NC CONFLICT MONITOR PROGRAMMING DETAIL

(remove jumpers and set switches as shown)

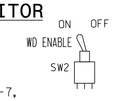

REMOVE DIODE JUMPERS 1-5, 1-6, 1-9, 1-11, 2-5, 2-6, 2-9, 2-11, 3-7, 3-8, 3-12, 4-7, 4-8, 4-12, 5-9, 5-11, 6-9, 6-11, 7-12, 8-12, 9-11

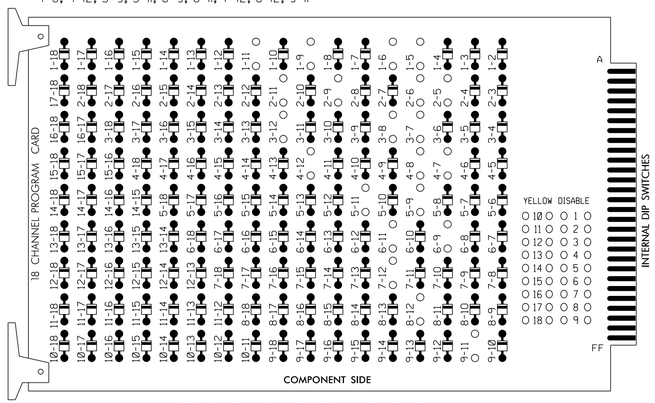

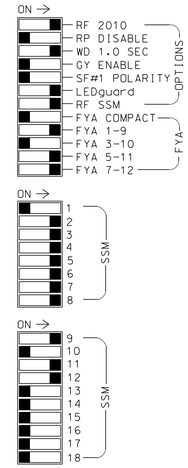

REMOVE JUMPERS AS SHOWN

■ = DENOTES POSITION OF SWITCH

NOTES:

1. Card is provided with all diode jumpers in place. Removal of any jumper allows its channels to run concurrently.
2. Ensure jumpers SEL2-SEL5 and SEL9 are present on the monitor board.
3. Ensure that Red Enable is active at all times during normal operation.
4. Integrate monitor with Ethernet network in cabinet.

NOTES

1. To prevent "flash-conflict" problems, insert red flash program blocks for all unused vehicle load switches in the output file. The installer shall verify that signal heads flash in accordance with the Signal Plans.
2. Program phase 8 for Dual Entry.
3. Enable Simultaneous Gap-Out for all Phases.
4. Program phases 2 and 6 for Variable Initial and Gap Reduction.
5. Program phases 2 and 6 for Startup In Green.
6. Program phases 2 and 6 for Yellow Flash, and overlap 1 as Wag Overlaps.
7. The cabinet and controller are part of the High Point System.

SIGNAL HEAD HOOK-UP CHART

LOAD SWITCH NO.	S1	S2	S3	S4		S5	S6	S7		S8	S9	S10		S11	S12	AUX S1	AUX S2	AUX S3	AUX S4	AUX S5	AUX S6
CMU CHANNEL NO.	1	2	13	3		4	14	5		6	15	7		8	16	9	10	17	11	12	18
PHASE	1	2	2 PED	3		4	4 PED	5		6	6 PED	7		8	8 PED	OLA	OLB	SPARE	OLC	OLD	SPARE
SIGNAL HEAD NO.	11★	21,22, 23	NU	23	31,32	41,42	NU	42	51★	61,62, 63	NU	63	71★	81,82	NU	11★	NU	NU	51★	71★	NU
RED		128				101		✳		134		✳		107							
YELLOW	✳	129				102				135				108							
GREEN		130				103				136				109							
RED ARROW					116											A121			A114	A101	
YELLOW ARROW				117	117			132				123				A122			A115	A102	
FLASHING YELLOW ARROW																A123			A116	A103	
GREEN ARROW	127			118	118			133	133			124	124								

NU = Not Used

✳ Denotes install load resistor. See load resistor installation detail this sheet.

★ See pictorial of head wiring in detail this sheet.

EQUIPMENT INFORMATION

CONTROLLER.....2070E
CABINET.....332 W/ AUX
SOFTWARE.....ECONOLITE OASIS
CABINET MOUNT.....BASE
OUTPUT FILE POSITIONS...18 WITH AUX. OUTPUT FILE
LOAD SWITCHES USED.....S1,S2,S4,S5,S7,S8,S10,S11, AUX S1,AUX S4,AUX S5
PHASES USED.....1,2,3,4,5,6,7,8
OVERLAP "A".....1+2
OVERLAP "B".....Not Used
OVERLAP "C".....5+6
OVERLAP "D".....7+8

INPUT FILE CONNECTION & PROGRAMMING CHART

LOOP NO.	LOOP TERMINAL	INPUT FILE POS.	PIN NO.	INPUT ASSIGNMENT NO.	DETECTOR NO.	NEMA PHASE	CALL	EXTEND	FULL TIME DELAY	STRETCH TIME	DELAY TIME
1A[1]	TB2-1,2	I1U	56	18	1	1	Y	Y	_	___	15
	-	J4U	48	10★	26	6	Y	Y	Y	___	3
	-	I1U	56	18★	51	1	Y	Y	_	___	__
2A	TB2-5,6	I2U	39	1	2	2	Y	Y	_	___	__
2B	TB2-7,8	I2L	43	5	12	2	Y	Y	_	___	__
2C	TB2-9,10	I3U	63	25	32	2	Y	Y	_	___	__
3A	TB4-5,6	I5U	58	20	3	3	Y	Y	_	___	--
3B	TB6-11,12	I9L	62	24	13	3	Y	Y	_	___	--
4A	TB4-9,10	I6U	41	3	4	4	Y	Y	_	___	__
5A[2]	TB3-1,2	J1U	55	17	5	5	Y	Y	_	___	15
	-	I4U	47	9★	22	2	Y	Y	Y	___	3
	-	J1U	55	17★	55	5	Y	Y	_	___	__
5B	TB7-9,10	J9U	59	21	15	5	Y	Y	_	___	15
6A	TB3-5,6	J2U	40	2	6	6	Y	Y	_	___	__
6B	TB3-7,8	J2L	44	6	16	6	Y	Y	_	___	__
6C	TB3-9,10	J3U	64	26	36	6	Y	Y	_	___	__
7A[3]	TB5-5,6	J5U	57	19	7	7	Y	Y	_	___	15
	-	I8U	49	11★	24	4	Y	Y	Y	___	__
	-	J5U	57	19★	57	7	Y	Y	_	___	__
8A	TB5-9,10	J6U	42	4	8	8	Y	Y	_	___	5

[1] Add jumper from I1-W to J4-W, on rear of input file.
[2] Add jumper from J1-W to I4-W, on rear of input file.
[3] Add jumper from J5-W to I8-W, on rear of input file.
★ See Input Page Assignment programming details on sheets 3, 4, and 5.

INPUT FILE POSITION LEGEND: J2L
FILE J
SLOT 2
LOWER

INPUT FILE POSITION LAYOUT

(front view)

		1	2	3	4	5	6	7	8	9	10	11	12	13	14
FILE "I"	U	Ø1 1A	Ø2 2A	Ø2 2C	WIRED INPUT ⊗	Ø3 3A	Ø4 4A	SLOT EMPTY	WIRED INPUT ⊗	NOT USED	SLOT EMPTY	SLOT EMPTY	SLOT EMPTY	SLOT EMPTY	FS DC ISOLATOR
	L	NOT USED	Ø2 2B	NOT USED		NOT USED	NOT USED			Ø3 3B					ST DC ISOLATOR
FILE "J"	U	Ø5 5A	Ø6 6A	Ø6 6C	WIRED INPUT ⊗	Ø7 7A	Ø8 8A	SLOT EMPTY	SLOT EMPTY	Ø5 5B	SLOT EMPTY	SLOT EMPTY	SLOT EMPTY	SLOT EMPTY	SLOT EMPTY
	L	NOT USED	Ø6 6B	NOT USED		NOT USED	NOT USED			NOT USED					

EX.: 1A, 2A, ETC. = LOOP NO.'S

⊗ Wired Input - Do not populate slot with detector card

FS = FLASH SENSE
ST = STOP TIME

FYA SIGNAL WIRING DETAIL

(wire signal heads as shown)

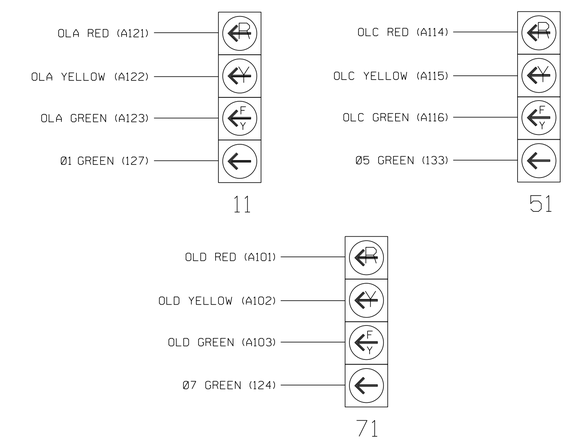

NOTE

The sequence display for signal heads 11, 51, and 71 requires special logic programming. See sheet 2 for programming instructions.

LOAD RESISTOR INSTALLATION DETAIL

(install resistors as shown below)

ACCEPTABLE VALUES

VALUE (ohms)	WATTAGE
1.5K - 1.9K	25W (min)
2.0K - 3.0K	10W (min)

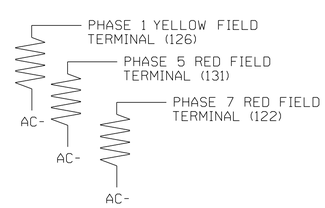

THIS ELECTRICAL DETAIL IS FOR
THE SIGNAL DESIGN: Ø7-1794
DESIGNED: February 2018
SEALED: 3/20/2018
REVISED: _____

Electrical Detail - Sheet 1 of 6

DOCUMENT NOT CONSIDERED FINAL UNLESS ALL SIGNATURES COMPLETED

MOTT MACDONALD
PO Box 700
Fuquay-Varina, NC 27526
www.mottmac.com
License No. F-0669

ELECTRICAL AND PROGRAMMING DETAILS FOR:

Prepared for the Offices of:
Transportation Mobility and Safety Division
Department of Transportation
Signal Design Section
750 N.Greenfield Pkwy,Garner,NC 27529

SR 4121 (JAMESTOWN PARKWAY)
AT
SR 1355 (HARVEY ROAD)

DIVISION 7 GUILFORD COUNTY HIGH POINT

PLAN DATE: February 2018	REVIEWED BY: T. PATE
PREPARED BY: B. LEHAN	REVIEWED BY: R. THOMPSON

REVISIONS	INIT.	DATE

SEAL
NORTH CAROLINA PROFESSIONAL SEAL 032711 ENGINEER RUSSELL W. THOMPSON

DocuSigned by:
Russell W. Thompson 3/20/2018
420B6A76F0647A...
DATE

SIG. INVENTORY NO. Ø7-1794

$$$$$SYSTINC$$$$$
$$$$$DGN$$$$$
$$$$$USERNAME$$$$$