DocuSign Envelope ID: 1886D70A-4CD7-4F67-AFEF-5A3D1D5E98B8

PROJECT REFERENCE NO.	SHEET NO.
U-2412A	Sig.8.1

EDI MODEL 2018ECLip-NC CONFLICT MONITOR PROGRAMMING DETAIL

(remove jumpers and set switches as shown)

REMOVE DIODE JUMPERS 1-5,1-6,1-9,1-11,2-5,2-6,2-9,2-11,4-8,4-10,4-12,5-9,5-11, 6-9,6-11,8-10,8-12,9-11, and 10-12

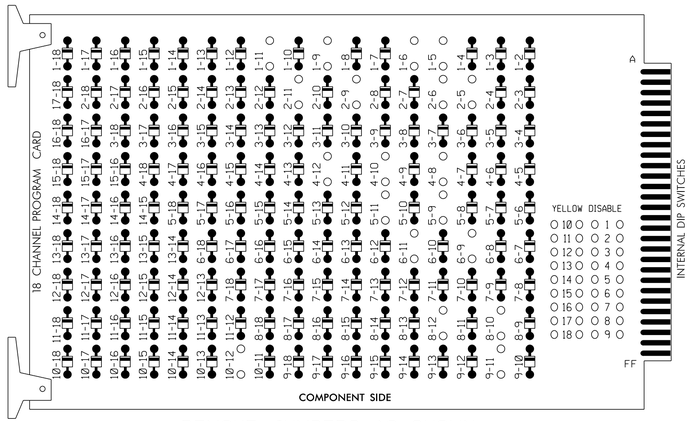

REMOVE JUMPERS AS SHOWN

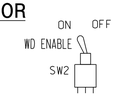

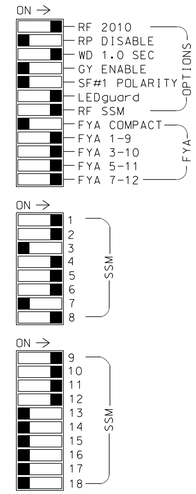

■ = DENOTES POSITION OF SWITCH

NOTES:

1. Card is provided with all diode jumpers in place. Removal of any jumper allows its channels to run concurrently.
2. Ensure jumpers SEL2-SEL5 and SEL9 are present on the monitor board.
3. Ensure that Red Enable is active at all times during normal operation.
4. Integrate monitor with Ethernet network in cabinet.

INPUT FILE POSITION LAYOUT

(front view)

		1	2	3	4	5	6	7	8	9	10	11	12	13	14
FILE "I"	U	Ø1	Ø2	SLOT	WIRED ⊗ INPUT	SLOT	Ø4	Ø5	SLOT	SLOT	SLOT	SLOT	SLOT	SLOT	FS
		1A	2A	EMPTY		EMPTY	4A	5B	EMPTY	EMPTY	EMPTY	EMPTY	EMPTY	EMPTY	DC ISOLATOR
	L	NOT USED	Ø2				Ø4	NOT USED							ST
			2B				4B								DC ISOLATOR
FILE "J"	U	Ø5	Ø6	SLOT	WIRED ⊗ INPUT	SLOT	Ø8	Ø1	SLOT	SLOT	SLOT	SLOT	SLOT	SLOT	SLOT
		5A	6A	EMPTY		EMPTY	8A	1B	EMPTY	EMPTY	EMPTY	EMPTY	EMPTY	EMPTY	EMPTY
	L	NOT USED	Ø6				Ø8	NOT USED							
			6B				8B								

EX.: 1A, 2A, ETC. = LOOP NO.'S

FS = FLASH SENSE
ST = STOP TIME

⊗ Wired Input - Do not populate slot with detector card

LOAD RESISTOR INSTALLATION DETAIL

(install resistors as shown below)

ACCEPTABLE VALUES

VALUE (ohms)	WATTAGE
1.5K - 1.9K	25W (min)
2.0K - 3.0K	10W (min)

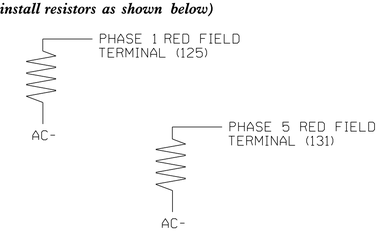

NOTES

1. To prevent "flash-conflict" problems, insert red flash program blocks for all unused vehicle load switches in the output file. The installer shall verify that signal heads flash in accordance with the Signal Plans.
2. Program phases 4 and 8 for Dual Entry.
3. Enable Simultaneous Gap-Out for all Phases.
4. Program phases 2 and 6 for Variable Initial and Gap Reduction.
5. Program phases 2 and 6 for Startup In Green.
6. Program phases 2 and 6 for Yellow Flash, and overlaps 1 and 2 as Wag Overlaps.
7. The cabinet and controller are part of the High Point Signal System.

SIGNAL HEAD HOOK-UP CHART

LOAD SWITCH NO.	S1		S2	S3	S4	S5	S6	S7		S8	S9	S10	S11	S12	AUX S1	AUX S2	AUX S3	AUX S4	AUX S5	AUX S6
CMU CHANNEL NO.	1		2	13	3	4	14	5		6	15	7	8	16	9	10	17	11	12	18
PHASE	1		2	2 PED	3	4	4 PED	5		6	6 PED	7	8	8 PED	OLA	OLB	SPARE	OLC	OLD	SPARE
SIGNAL HEAD NO.	11★	83	21,22	NU	NU	42,43	NU	51★	43	61,62	NU	NU	82,83	NU	11★	81★	NU	51★	41★	NU
RED		✳	128			101			✳	134			107							
YELLOW			129			102				135			108							
GREEN			130			103				136			109							
RED ARROW															A121	A124		A114	A101	
YELLOW ARROW		126							132						A122	A125		A115	A102	
FLASHING YELLOW ARROW															A123	A126		A116	A103	
GREEN ARROW	127	127						133	133											

NU = Not Used

✳ Denotes install load resistor. See load resistor installation detail this sheet.

★ See pictorial of head wiring in detail this sheet.

EQUIPMENT INFORMATION

CONTROLLER.....2070E
CABINET.....332 W/ AUX
SOFTWARE.....ECONOLITE OASIS
CABINET MOUNT.....BASE
OUTPUT FILE POSITIONS...18 WITH AUX. OUTPUT FILE
LOAD SWITCHES USED.....S1,S2,S5,S7,S8, S11,AUX S1, AUX S2, AUX S4, AUX S5
PHASES USED.....1,2,4,5,6,8
OVERLAP "A".....1+2
OVERLAP "B".....4
OVERLAP "C".....5+6
OVERLAP "D".....8

INPUT FILE CONNECTION & PROGRAMMING CHART

LOOP NO.	LOOP TERMINAL	INPUT FILE POS.	PIN NO.	INPUT ASSIGNMENT NO.	DETECTOR NO.	NEMA PHASE	CALL	EXTEND	FULL TIME DELAY	STRETCH TIME	DELAY TIME
1A[1]	TB2-1,2	I1U	56	18	1	1	Y	Y	_	___	15
	-	J4U	48	10	26	6	Y	Y	Y	___	3
1B	TB7-1,2	J7U	66	28	38	1	Y	Y	_	___	15
2A	TB2-5,6	I2U	39	1	2	2	Y	Y	_	___	__
2B	TB2-7,8	I2L	43	5	12	2	Y	Y	_	___	__
4A	TB4-9,10	I6U	41	3	4	4	Y	Y	_	___	3
4B	TB4-11,12	I6L	45	7	14	4	Y	Y	_	___	--
5A[2]	TB3-1,2	J1U	55	17	5	5	Y	Y	_	___	15
	-	I4U	47	9	22	2	Y	Y	Y	___	3
5B	TB6-1,2	I7U	65	27	34	5	Y	Y	_	___	15
6A	TB3-5,6	J2U	40	2	6	6	Y	Y	_	___	__
6B	TB3-7,8	J2L	44	6	16	6	Y	Y	_	___	__
8A	TB5-9,10	J6U	42	4	8	8	Y	Y	_	___	3
8B	TB5-11,12	J6L	46	8	18	8	Y	Y	_	___	--

[1] Add jumper from I1-W to J4-W, on rear of input file.
[2] Add jumper from J1-W to I4-W, on rear of input file.

INPUT FILE POSITION LEGEND: J2L
FILE J
SLOT 2
LOWER

FYA SIGNAL WIRING DETAIL

(wire signal heads as shown)

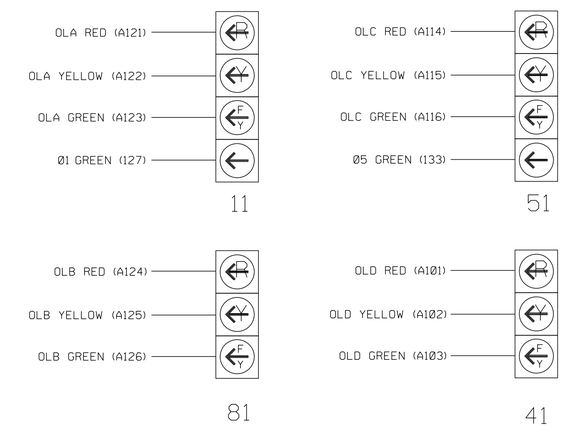

NOTE

The sequence display for signal heads 11 and 51 requires special logic programming. See sheet 2 for programming instructions.

THIS ELECTRICAL DETAIL IS FOR
THE SIGNAL DESIGN: Ø7-1792
DESIGNED: February 2018
SEALED: 3/20/2018
REVISED: _____

Electrical Detail - Sheet 1 of 2

DOCUMENT NOT CONSIDERED FINAL UNLESS ALL SIGNATURES COMPLETED

MOTT MACDONALD
PO Box 700
Fuquay-Varina, NC 27526
www.mottmac.com
License No. F-0669

ELECTRICAL AND PROGRAMMING DETAILS FOR:
Prepared for the Offices of:
Transportation Mobility and Safety Division
Signal Design Section
750 N.Greenfield Pkwy,Garner,NC 27529

SR 4121 (JAMESTOWN PARKWAY) AT SR 1332 (SCIENTIFIC STREET)

DIVISION 7 GUILFORD COUNTY HIGH POINT

PLAN DATE: February 2018	REVIEWED BY: T. Pate
PREPARED BY: B. LEHAN	REVIEWED BY: R. Thompson

REVISIONS	INIT.	DATE

SEAL
NORTH CAROLINA PROFESSIONAL SEAL 045256 ENGINEER BRENDAN A. LEHAN

DocuSigned by: Brendan Lehan 3/20/2018
DATE

SIG. INVENTORY NO. 07-1792

$$$$SYSTIME$$$$
$$$$USERNAME$$$$