0012DEL_P28
1001ADD_P28

STATE OF NORTH CAROLINA
DEPARTMENT OF TRANSPORTATION

ROY COOPER
GOVERNOR

JAMES H. TROGDON, III
SECRETARY

May 4, 2018

Addendum No. 1
RE: Contract # C204058
WBS # 44475.3.6, 44475FHWA.3.1
F. A. # STBGDA-1001 (79)
Mecklenburg County (P-5705BA, BB)
Charlotte Gateway Station

May 15, 2018 Letting

To Whom It May Concern:

The Contractor is hereby notified that, as a matter of supplemental information , NSR Standard Specifications, NSR Public Projects Manual and Existing NS Bridge plans for bridges with required demolition have been posted on the web along with the other information for this project.

Reference is made to the plans and proposal form furnished to you on this project.

The following revisions have been made to the Roadway plans:

Sheet No.	Revisions
3B	Revised to reflect the below noted earthwork quantity changes

Please void sheet No. 3B in your plans and staple the revised sheet No. 3B thereto.

The following revisions have been made to the Structure plans:

Sheet No.	Revisions
S6-2 and S7-3	Revised to reflect the below noted pounds of Structural Steel revision
S7-24	Revised spacing of the #7V7 bars in the elevation view
A-203 and A-301	Revised to clean up some lines as shown in the clouded locations
A-404	Revised to remove callout for "T. O. Rail North"
S-002	Revised quantity of "Pile Driving Equipment Setup for HP 14 X 73 Steel Piles" in the Total Bill Of Material
S-113	Revised to show Typical dimension between vertical and battered piles

Mailing Address:
NC DEPARTMENT OF TRANSPORTATION
CONTRACT STANDARDS AND DEVELOPMENT
1591 MAIL SERVICE CENTER
RALEIGH, NC 27699-1591

Telephone: (919) 707-6900
Fax: (919) 250-4127
Customer Service: 1-877-368-4968

Location:
1020 BIRCH RIDGE DR.
RALEIGH, NC 27610

Website: www.ncdot.gov

Sheet No.	Revisions
S-131 thru S-132 and S-134 thru S-137	Revised to reflect a "T.O.F." of 738.00 rather than "B.O.F."
S-304 thru S-306 and S-309	Revised the pile batter of the HP 14 x 73 piles
S-307	Revised to reflect that bar callout for rebar 6-C637 is to be top and bottom
S-308	Revised to add "Waterstop" callout
S-310 and S-311	Revised to add thickness dimension of ramp and properly denote the areas with compacted stone
S-314	Revised to reflect that bar callout for rebar 6-C637 is to be top and bottom and to add note concerning pedestrian tunnel plans
S-315	Revised bar callout
S-320 thru S-322	Revised some dimensions and bar callouts
S-323	Revised to add more details concerning the egress stairway and landing
S-330, S-331 and S-333	Revised the typical reinforcement lap callout
S-335	Revised to add some dimensions and bar callout
S-402	Revised to add detail callouts
S-501	Revised the rebar splice length table and added callout for drip edge
S-651	Revised the reinforcement schedule
S-701	Revised the girder schedule
S-702	Revised to remove the Table of Deck Elevations
S-709	Revised the camber table
S-712	Revised the platform deck reinforcement schedule
S-801	Revised the girder schedule
S-802	Revised to remove the Table of Deck Elevations
S-808	Revised the girder camber table
S-811	Revised the rebar schedule

Please void the above noted sheets in your plans and staple the revised sheets thereto.

The following revisions have been made to the proposal:

Page No.	Revisions
Proposal Cover	Note added that reads "Includes Addendum No. 1 Dated 05-04-2018".
Table of Contents	Revised the 2nd page of the TOC to reflect changes described below
G-10	Revised the list of items within the project special provision entitled "Major Contract Items"
G-41	Added language within the project special provision entitled "Prequalification Of Contractors" and revised the second sentence of the first paragraph of the project special provision entitled "Locating Existing Underground Utilities"

Page No.	Revisions
G-42	Revised the first sentence of the first paragraph and added #8 to the list in the second paragraph of the project special provision entitled "Contractor Work Plans".
G-45	Revised the second sentence in the first paragraph of the project special provision entitled "Railroad Work"
G-50	Added a sentence at the end of the section "Pedestrian Walkway Requirements" within the project special provision entitled "Bank of America Stadium Requirements". Also, added new project special provision entitled "Building Removal"
New G-51 and G-52	New page numbers to include the project special provisions entitled "Project Requirements In The Vicinity Of The CATS Gold Line Project" and "Project Schedule"
UbO-2	Revised the dates for "Zayo" and "Spectrum" relocations within the project special provision entitled "Utilities By Others"
RR-6	Revised the fourth paragraph within the project special provision entitled "Embankment"
RR-17 and New RR-17A	Added the project special provisions entitled "Temporary Chain Link Fence" and "Decorative Fence Reset"
RR-47	Added a new paragraph (third from the bottom) to the project special provision entitled "Incorporation Of and Revisions To Appendix A, Norfolk Southern Standard Special Provisions For Protection Of Railway Interests"
RR-51	Added a new paragraph at the very end of the project special provision entitled "Incorporation Of and Revisions To Appendix A, Norfolk Southern Standard Special Provisions For Protection Of Railway Interests"
GT-4.1	Added a new sentence as a new paragraph of the project special provision entitled "Standard Shoring"

Please void the Proposal Cover and the above listed pages in your proposal and staple the revised pages thereto. Add New Page Nos. G-51 and G-52 after revised Page No. G-50. Add New Page No.RR-17A after revised Page No. RR-17.

On the item sheets the following pay item quantities have been revised and new pay items added:

Item	Description	Old Quantity	New Quantity
011-0106000000-E-230	Borrow Excavation	117,000 CY	29,400 CY
016-0194000000-E-265	Select Granular Material, Class III **(Old item was Select Granular Material)**	1,000 CY	84,400 CY
292-3575000000-E-SP	Temporary Chain Link Fence, 60" Fabric	**NEW ITEM**	195 LF

293-3575000000-E-SP	Decorative Fence Reset	**NEW ITEM**	50 LF
228-8860000000-N-SP	Structural Steel Sta. 28+12.88-S2-	287,340 LBS Lump Sum	233,588 LBS Lump Sum
229-8860000000-N-SP	Structural Steel Sta. 28+17.22-S1-	287,340 LBS Lump Sum	233,588 LBS Lump Sum
289-8897000000-N-SP	Pile Driving Equipment Setup For HP 14 x 73 Steel Piles	589 EA	593 EA

The Contractor's bid must be based on the revised pay item quantities and must include the new pay items.

The Expedite File has been updated to reflect these revisions. Please download the Expedite Addendum File and follow the instructions for applying the addendum. Bid Express will not accept your bid unless the addendum has been applied.

The contract will be prepared accordingly.

Sincerely,

DocuSigned by:
Ronald E. Davenport, Jr.
F81B6038A47A442...
Ronald E. Davenport, Jr., PE
State Contract Officer

RED/jag
Attachments

cc: Mr. Lamar Sylvester, PE
Mr. Scott Cole, PE
Mr. Ron Hancock, PE
Mr. Jon Weathersby, PE
Mr. Ken Kennedy, PE
Ms. Lori Strickland
Project File (2)
Mr. Ray Arnold, PE
Ms. Theresa Canales, PE
Mr. Jason Orthner, PE
Mr. Mike Gwyn
Ms. Jaci Kincaid
Ms. Penny Higgins
Mr. Mitchell Dixon

0012DEL_P28
1001ADD_P28

STATE OF NORTH CAROLINA
DEPARTMENT OF TRANSPORTATION
RALEIGH, N.C.

PROPOSAL

INCLUDES ADDENDUM No. 1 DATED 05-04-2018

DATE AND TIME OF BID OPENING: **MAY 15, 2018 AT 2:00 PM**

CONTRACT ID	C204058
WBS	44475.3.6, 44475FHWA.3.1

FEDERAL-AID NO.	STATE FUNDED, STBGDA-1001(79)
COUNTY	MECKLENBURG
T.I.P. NO.	P-5705BA, P-5705BB
MILES	0.742
ROUTE NO.	
LOCATION	CHARLOTTE GATEWAY STATION.

TYPE OF WORK GRADING, DRAINAGE, PAVING, STRUCTURES, AND ARCHITECTURE.

NOTICE:

ALL BIDDERS SHALL COMPLY WITH ALL APPLICABLE LAWS REGULATING THE PRACTICE OF GENERAL CONTRACTING AS CONTAINED IN CHAPTER 87 OF THE GENERAL STATUTES OF NORTH CAROLINA WHICH REQUIRES THE BIDDER TO BE LICENSED BY THE N.C. LICENSING BOARD FOR CONTRACTORS WHEN BIDDING ON ANY NON-FEDERAL AID PROJECT WHERE THE BID IS $30,000 OR MORE, EXCEPT FOR CERTAIN SPECIALTY WORK AS DETERMINED BY THE LICENSING BOARD. BIDDERS SHALL ALSO COMPLY WITH ALL OTHER APPLICABLE LAWS REGULATING THE PRACTICES OF ELECTRICAL, PLUMBING, HEATING AND AIR CONDITIONING AND REFRIGERATION CONTRACTING AS CONTAINED IN CHAPTER 87 OF THE GENERAL STATUTES OF NORTH CAROLINA. NOTWITHSTANDING THESE LIMITATIONS ON BIDDING, THE BIDDER WHO IS AWARDED ANY FEDERAL - AID FUNDED PROJECT SHALL COMPLY WITH CHAPTER 87 OF THE GENERAL STATUTES OF NORTH CAROLINA FOR LICENSING REQUIREMENTS WITHIN 60 CALENDAR DAYS OF BID OPENING.

BIDS WILL BE RECEIVED AS SHOWN BELOW:

THIS IS A RAIL PROPOSAL

5% BID BOND OR BID DEPOSIT REQUIRED

MATERIALS AND TESTING: G-41
LOCATING EXISTING UNDERGROUND UTILITIES: G-41
COORDINATION OF PLANS, SPECIFICATIONS, SUPPLEMENTAL SPECIFICATIONS
GAND SPECIAL PROVISIONS: G-42
CONTRACTOR WORK PLANS: G-42
CONSTRUCTION STAKES, LINES AND GRADE: G-43
DUKE ENERGY REQUIREMENTS: G-43
CITY STREET CLOSURE RESTRICTIONS: G-44
TERMS AND DEFINITIONS: G-44
LIABILITY INSURANCE: G-45
RAILROAD WORK: G-45
NIGHT OPERATIONS: G-48
BANK OF AMERICA STADIUM REQUIREMENTS: G-49
BUILDING REMOVAL G-50
PROGRESS SCHEDULE G-51
PROJECT REQUIREMENTS IN THE VICINITY OF THE CATS GOLD LINE PROJECTG-51

ROADWAY R-1

STANDARD SPECIAL PROVISIONS

AVAILABILITY FUNDS – TERMINATION OF CONTRACTS SSP-1
NCDOT GENERAL SEED SPECIFICATION FOR SEED QUALITY SSP-2
ERRATA SSP-5
PLANT AND PEST QUARANTINES SSP-6
MINORITY AND FEMALE EMPLOYMENT REQUIREMENTS SSP-7
REQUIRED CONTRACT PROVISIONS FEDERAL-AID CONST. CONTRACTS SSP-10
ON-THE-JOB TRAINING SSP-19
MINIMUM WAGES SSP-22

UNIT PROJECT SPECIAL PROVISIONS

TIGER GRANT FF-1
GEOTECHNICAL GT-0.1
GEOENVIRONMENTAL GV-1
UTILITY CONSTRUCTION UC-1
UTILITY BY OTHERS UBO-1
EROSION CONTROL EC-1
RAILROAD INSURANCE (Roadway) RR-1
STRUCTURE / CULVERTS ST-1
PLATFORM AND CONCOURSE - ARCHITECTURE ARC-1
PLATFORM AND CONCOURSE - PLUMBING PL-1
ELECTRIC TRACTION ET-1

PROPOSAL ITEM SHEET

ITEM SHEET(S) (TAN SHEETS)

DELAY IN RIGHT OF WAY:

SPI 1-24

The Contractor shall take no action that will result in unnecessary inconvenience, disproportionate injury or any action coercive in nature to occupants of residences, businesses, farms, or non-profit organizations who have not yet moved from the right of way of the parcels below:

Parcel No.	Property Owner	Estimated Vacating Date
22A	Greyhound Lines, Inc.	11-1-2018

Extension of contract time may be granted in accordance with Article 108-10(B)3 for delays caused by interferences beyond such estimated vacating date.

MAJOR CONTRACT ITEMS:

(2-19-02) 104 SP1 G28

The following listed items are the major contract items for this contract (see Article 104-5 of the *2018 Standard Specifications*):

Line #	Description
16	Select Granular Material, Class III
192	Class AA Concrete
215	Class AA Concrete (Bridge)
216	Reinforcing Steel (Bridge)

SPECIALTY ITEMS:

(7-1-95)(Rev. 1-17-12) 108-6 SP1 G37

Items listed below will be the specialty items for this contract (see Article 108-6 of the *2018 Standard Specifications*).

Line #	Description
68-72	Guardrail
73-83, 281, 283	Fencing
89-94, 112-113	Signing
108, 110	Long-Life Pavement Markings
114-142	Utility Construction
143-168	Erosion Control
184-185, 282, 286	Micropiles
204-212	Drilled Piers

FUEL PRICE ADJUSTMENT:

(11-15-05) (Rev. 2-18-14) 109-8 SP1 G43

Revise the *2018 Standard Specifications* as follows:

Page 1-83, Article 109-8, Fuel Price Adjustments, add the following:

The base index price for DIESEL #2 FUEL is **$ 2.0984** per gallon. Where any of the following are included as pay items in the contract, they will be eligible for fuel price adjustment.

RAILROAD SAFETY JOB BRIEFINGS:

Add the following to Standard Specification 108-4:

In addition to construction conferences, the contractor shall perform daily railroad safety job briefings with the railroad flagman before commencing work. The attendees of the job briefing shall include anyone who will be entering the work zone during that work period. All contractor and subcontractor supervisory staff, craftsmen, unskilled labor who will be in or entering the work zone shall be in attendance during the safety briefings. Individuals who enter the work zone after the safety briefing has already been conducted shall receive the job briefing from the contractor's employee in charge prior to entry.

PREQUALIFICATION OF CONTRACTORS:

In order to be awarded this project the prime contractor shall be prequalified for work code 5090 "Right-of-Way Prime Contractor". Applications for prequalification in work code 5090 must be transmitted to and received by Mr. Mickey Biedell, PE, State Qualifications Engineer no later than 5:00 p.m. on Thursday May 10th, 2018. If the apparent low bidder is not prequalified for work code 5090 at the time of bid, the deadline for getting this prequalification is 10:00 a. m. on the sixth calendar day following the opening of bids. If the apparent low bidder cannot obtain the required 5090 work code by this deadline the Department will consider their bid non-responsive and will move to the next lowest responsible/responsive bidder.

NOTIFICATION OF OPERATIONS:

The Contractor shall notify the Engineer a minimum of 48 hours in advance of beginning work on this project. Some work, including work that will require railroad oversight or Bank of America security will require notice on the order of 15 or more days. The Contractor shall give the Engineer sufficient notice of all operations for any sampling, inspection or acceptance testing required.

MATERIALS AND TESTING:

The Engineer reserves the right to perform all sampling and testing in accordance with Section 106 of the *Standard Specifications* and the Department's "Materials and Tests Manual." However, the Engineer may reduce or increase the frequency of sampling and testing where he deems it appropriate for the project under construction.

Additional sampling and testing activities will not be considered grounds for Contractor-caused delays.

LOCATING EXISTING UNDERGROUND UTILITIES:

Add the following to Standard Specification section 105-8:

Underground railroad communication utilities are not located by independent utility locating services. Prior to construction activities, the contractor shall coordinate with the Engineer and the Railroad to have underground railroad communication utilities located by the railroad signal department.

The contractor shall also locate all existing underground storm water pipes and storm water drainage structures prior to construction activities. The data collected shall include all horizontal and vertical information of pipe and drainage structure inverts, pipe sizes and pipe materials.

COORDINATION OF PLANS, SPECIFICATIONS, SUPPLEMENTAL SPECIFICATIONS AND SPECIAL PROVISIONS:

Add the following to the end of Standard Specification 105-4:

Norfolk Southern Standard Special Provisions for the Protection of Railway Interests (included herein as Appendix A) shall govern over *NCDOT Standard Specifications*.

The Special and Project Special Provisions herein shall govern over Appendix A.

Federal Aid Construction Standard Special Provisions shall govern over Appendix A and the Special and Project Special Provisions herein.

CONTRACTOR WORK PLANS:

The Contractor shall submit a workplan to the Engineer for review and concurrence. The Contractor may not begin work until this workplan is reviewed with all comments addressed. The workplan will be subject to updates based on current site conditions. All costs and time for generating keeping workplan updated will be incidental to the Mobilization Bid item in the contract. The basic elements of the workplan shall include the following basic elements for each stage of construction:

1. To scale site plans and elevations with existing infrastructure shown
2. Written narrative of workplan with hours of operation and flagging schedule
3. Contaminated soil and water disposal plan, including any proposed storage areas on or off site.
4. Signed agreements for any staging areas not within the project site

The content contained in the workplan shall be responsive to the following administrative safety and security requirements listed in these special provisions most notably in the following sections:

1. The Crane Safety requirements in the special provisions and *Appendix A, Norfolk Southern Standard Special Provisions for Protection of Railway Interests*.
2. Locations of concrete pump and drill rig and any other significant equipment needed during each stage of operations.
3. Safety and security requirements described within the *Site Specific Safety Plan* project special provision.
4. Erosion and sediment control requirements.
5. Underground utility information found during the Contractors utility survey, with utilities marked to remain or to be abandoned.
6. All other applicable requirements listed in *Appendix A, Norfolk Southern Standard Special Provisions for Protection of Railway Interests*.
7. Safety, security and access requirements as described in the *Bank of America Stadium Requirements* project special provision.
8. Railroad roadbed access, construction and maintenance

The workplan shall also detail anticipated street and sidewalk closures and be responsive to CDOT requirements on closures of more than one road within the project limits simultaneously.

The proposed workplan shall be submitted for review within 14 days of administrative NTP.

Railway, Railway Company, Railroad, Railroad Company	Norfolk Southern Railway
Railroad Engineer	The authorized representative of the Railway.

LIABILITY INSURANCE:

Revise the *2018 Standard Specifications* as follows:

Article 107-15 LIABILITY INSURANCE, page 1-64, Lines 9-14, replace the third and fourth sentences of the second paragraph with the following:

"The State of North Carolina and the City of Charlotte shall be named as additional insured on this commercial general liability policy. The policy may contain the following language as relates to the State and the City as additional insured: 'This insurance with respect to the additional insured applies only to the extent that the additional insured is held liable for your or your agent's acts or omissions arising out of and in the course of operations performed for the additional insured."

The prime contractor is also required to carry liability insurance required by Norfolk Southern Railway. See *Appendix A, Norfolk Southern Standard Special Provisions for Protection of Railway Interests* for requirements.

RAILROAD WORK:

Project scope includes work within railroad Right of Way (ROW). This contract includes work items to satisfy Department commitments made to the railroad, through other agreements. Details and references to railroad standards committed to by the Department have been included with these documents and shall be the contractor's responsibility to maintain. Commitments made to the railroads include agreements to fully cooperate with and abide by railroad requirements for safety, communication and prevention of interference with operations. For the purpose of this contract, any reference to Engineer within the contract documents will mean the Department Engineer. The contractor shall receive contract authorization and direction only from the Engineer. The Railroad's Engineer may provide insight to the Contractor directly, but all information and directives shall be subject to verification by the Department Engineer managing this contract. All submittals, inspections, etc. requiring railroad approval shall be submitted and coordinated through the Department's Engineer.

At no additional cost or delay claim related to any of the following stipulations, the Contractor shall be knowledgeable and prepared to promptly comply with the following:

(A) Roles and Authorities

The Department will administer and manage the contract. The railroad(s) will retain control of activities within railroad ROW. Additional definitions and roles have been provided within these documents.

(B) Contract Document Precedence

- Provide an inside horizontal clearance of no less than 11'-0"
- Provide an inside vertical clearance of no less than 9'-0"
- Top of the structure shall not be any closer than 2'-0" to the bottom of girders on the Structure 8 (P&N bridge).
- Extend a sufficient distance beyond the width of the proposed construction to mitigate risks identified in the accepted Site Safety and Security Plan, and shall not be less than 15' beyond the limits of the existing lower P&N bridge.
- Designed to withstand likely loads as identified in the accepted Site Safety and Security Plan.

Contractor shall submit drawings, calculations, materials, and means and methods of construction for approval by the Engineer and BOA.

During construction of the temporary pedestrian walkway enclosure, or during other work when the temporary walkway enclosure is not installed, the Contractor shall assume that regular coordination with BOA through the Engineer will be required to identify acceptable work windows and potential for interruptions due to planned or variable BOA operations.

The Contractor shall be responsible for removal of the existing canopy located under the existing bridges, in whole or in part, as necessary to construct the temporary walkway enclosure.

Event Schedules

A calendar of anticipated events at Bank of America stadium will be provided each year by the Engineer to the Contractor when released by BOA. This schedule is not intended to be a comprehensive schedule and the Contractor shall engage in coordination with BOA through the Engineer to obtain updates to the schedules for all events in the vicinity.

Work Impediments

Events at Bank of America stadium may impact the Contractor's ability to access or work in this area on event days. For bidding purposes, the Contractor shall assume 17 events per year will limit or prevent access to this area. For these events, the Contractor may be directed by the Engineer to move all equipment out of this area for security purposes, for at least 3 days.

Lookahead Schedule

The Contractor shall include details of anticipated locations, types, and dates of operations in the station range above in the 3-week lookahead schedule submitted to the Engineer. Any proposed operations within the station range above shall be highlighted in each lookahead schedule update. The Contractor shall coordinate with the Engineer to determine the probability of impacts to BOA operations or events.

BUILDING REMOVAL:

(1-1-02) (Rev. 4-16-13) 215 SP2 R15 A

Remove the buildings, underground storage tanks and appurtenances listed below in accordance with Section 215 of the *2018 Standard Specifications*:

Parcel 022A Block w/brick veneer bus terminal, brick privacy wall and covered bus shelter Left of SS 23+75 to SS 28+00. (Pumps and underground fuel tank removal will be by NCDOT)

PROGRESS SCHEDULE:

Add the following to the end of Standard Specification 108-2:

The schedule shall include activity descriptions with beginning and ending dates, partial completion (in percentage or time format). Railroad roadbed activities should include beginning and ending stations of roadbed section. The schedule shall include activities or milestones indicating when NSR flagmen and construction forces should be mobilized to the site.

In addition to those requirements listed above, the Contractor shall include the following activities or milestones in the schedules, where applicable:

(A) Beginning and ending dates for each phase or section of railroad roadbed work.
(B) Beginning and ending dates for each phase of platform and concourse work
(C) Beginning and ending dates for each phase of work associated with the P&N Greenway area
(D) Dates when flagging for railroad protection is required and the expected type of flagging required, as coordinated with the Engineer and Railroad Engineer.
(E) Anticipated dates for removal of erosion control devices.

The Contractor shall continue to submit to the Engineer a schedule on a monthly basis until the work is substantially complete. The contractor shall be prepared to add additional activities/milestones as requested by the engineer. If no changes are required to the schedule dates, the Contractor shall resubmit the previous month's schedule with a revised submittal date and updated percent partial completion. The Contractor may submit an alternate schedule format for approval by the Engineer, to fulfill the monthly schedule update requirement.

PROJECT REQUIREMENTS IN THE VICINITY OF THE CATS GOLD LINE PROJECT:

The City of Charlotte and CATS currently have an in-progress construction project along West Trade Street within the P-5705BA and P-5705BB project limits - entitled the CityLYNX Gold Line Phase 2 project, hereinafter referred to as the Gold Line project - and expect to complete said construction and place the CityLYNX Gold Line Streetcar into service during this contract duration.

The contractor's attention is directed to the Cooperation Between Contractors special provision contained in this document including the CATS contractor for the Gold Line project in the protections and requirements of Section 105-7 of the *Standard Specifications*.

All work performed within 50' of the Gold Line project along Trade St shall be subject to work plan approval by the Engineer. The Contractor shall submit a detailed work plan for protection of the Gold Line project area as detailed in the Site Specific Safety Plan and subject to updates based on field conditions. A list of work activities that will require OCS power outages shall also be included.

This work plan will be subject to Railroad and CATS review and shall be submitted through the Engineer. This work plan will be considered a living document and will be subject to monthly

update reviews by the Railroad and CATS. All costs and time associated with the work plan development, execution of work according to the reviewed and conformed work plan, and execution of updates to the plan will be incidental to the bid item(s) of the work being affected.

Overhead Contact System

The Gold Line project will be constructing an overhead contact system (OCS) above the centerline of each track. Once energized, the Contractor shall expect to be subject to additional work restrictions. Girder erection operations or any other operation in the vicinity that requires equipment within 10 feet of the OCS wires or with potential for equipment to fall into this 10 feet buffer will only be permitted during timeframes when the OCS is de-energized. It is anticipated the OCS will be de-energized between 1:00 am and 4:00 am. The Contractor shall perform all necessary construction activities and secure cranes and equipment away from the OCS before the end of the work window. See Intermediate Contract Times for more details.

CATS Roadway Worker Training

The Contractor's personnel and personnel of their sub-contractors who will be present within 50 feet of the Gold Line project must be certified in CATS Roadway Worker Training, maintain copies of training certifications on their persons, and be prepared to present them upon request. This training will be valid for two (2) years from completion and requires retraining at expiration for the duration of the project. CATS Roadway Worker Training will be provided to the contractor free of charge by CATS. Two training dates will be provided at Contractor Mobilization and up to one (1) additional training will be provided per month thereafter. Training dates and times are to be coordinated two (2) weeks in advance with CATS through the Engineer. Penalties for lack of training certifications will include individuals being permanently removed from the project, at no delay or cost to the Department.

Milling Around Track Slab

For milling operations on Trade St to be conducted after the Gold Line concrete track slabs have been constructed, do not perform standard milling operations within one foot of the track slab to avoid damage. Milling within one foot of the concrete track slabs shall be performed with specialized equipment capable of performing the operation without causing damage to the track slab. Contractor shall submit proposed equipment to the Engineer for approval prior to milling operations.

PROJECT SPECIAL PROVISIONS
Utilities by Others

B) Verizon
Eric Crane
(919) 326-5604
eric.crane@verizon.com

C) CenturyLink
Richard Browning
(336) 268-8942
dennis.browning@centurylink.com

1. CenturyLink cable will be relocated by September 1, 2018.

D) AT&T
Roger Ramsey
(704) 424-1443
rr2136@att.com

DI) Zayo
Rusty Perdieu
(678) 275-8288
rusty.perdieu@zayo.com

(679) Zayo's duct bank will be located by October 1, 2018

DII) Spectrum
Greg Brown
(980) 722-7631
Gregg.brown@twcable.com
Spectrum will have completed their relocation by September 1, 2018

DocuSign Envelope ID: A00C9972-C128-4C1F-A509-E01552B320AD

Proof rolling of subgrade surface will not be required where the subgrade surface is rock cut; where, in the opinion of the Engineer, proof rolling would be detrimental to the work; where the proof roller will approach a culvert, pipe or other conduit closer than five feet in any direction; or where the proof roller may damage adjacent work due to restrictions in available access and for maneuvering space.

EMBANKMENT

The placement and compaction of embankment work shall be performed in accordance with Section 235,"EMBANKMENTS" of the *Standard Specifications* and as follows:

All earth fills shall be made in uniform layers of not more than 6" thick after compaction. Rock may be placed in compacted layers of not more than 24" thick. Each fully compacted layer shall extend the full width of the cross section. Each layer shall be free from mud, snow, ice or excessive (standing) water before a subsequent layer is placed. Excessive lift thickness will be grounds for rejection and/or requirement that Contractor provide survey of lifts to verify thickness for the whole lift area. If required by the Engineer, surveys of lift thickness shall be conducted up to every 25' along the alignment and up to every 5' perpendicular to the alignment at no additional cost to the Department.

Sandy or rocky material shall be spread in full width layers to form drainage planes from the center through the edge of the embankment. Pockets of open materials surrounded by more impervious material shall be avoided. No bridge lifts shall be used.

Embankments shall be formed with suitable materials from on-site cuts and/or necessary suitable material from borrow pits. Organic material such as brush, stumps, roots and trees or other perishable items shall not be placed in embankments. Coal or organic shale shall not be included in the embankment. Bituminous material shall not be used in railroad embankment. In addition to requirements for all embankment material, embankment material placed within zones 1, 2, 3, and 4 as shown on Sheet 2S, Excavation Adjacent to Active Track, shall also minimally meet the requirements of section 1016, class III select material. In fill sections, after stripping the topsoil and/organic material, the entire area on which the embankment is to be placed shall be plowed, scarified, and compacted for a minimum depth of 6". After compaction, the contractor shall proof roll the existing subgrade to ascertain the stability of the existing subgrade and to locate deficiencies requiring correction. If deficiencies are found in the existing subgrade, the Engineer shall determine the appropriate corrective measures. The initial lift and all future fill layers shall be compacted to 95% of maximum density per Standard Proctor in accordance with ASTM D698-T and AASHTO T 99, or 90% of maximum density per Modified Proctor in accordance with ASTM D-1557/AASHTO T180, except that a minimum of the top **2' of fill shall be compacted to 100% Standard Proctor.**

The top 12" of the subgrade in all cut sections that will be cut to subgrade elevation shall be plowed, scarified and compacted to 100% Standard Proctor. The Engineer shall determine the AASHTO test method to be used after review of the soil analysis.

The Contractor shall notify the Engineer when fill layers are ready for compaction testing. Successive layers shall not be placed prior to an acceptable density being obtained on each layer. The moisture content of the soil shall be controlled as necessary to obtain the specified densities based upon the optimum moisture content for each material. Water shall be added to the soil when,

DocuSign Envelope ID: A00C9972-C128-4C1F-A509-E01552B320AD

BORING INTO EXISTING 5'X5' BOX CULVERT AT -S1- STA. 15+08 (LT)

Add the following to Section 310-6 of the *Standard Specifications*:

All work associated with the tie-in of the proposed 18" RC Pipe Culvert, Class III to the existing 5'x5' box culvert at -S1- Sta. 15+08 (LT), including temporary shoring design, installation, soil excavation, select demolition of existing drainage box, closure pour to connect the pipe to the box, backfilling and compaction with suitable material shall be incidental to the 18" RC Pipe Culvert, Class III pay item.

TEMPORARY CHAIN LINK FENCE

DESCRIPTION

Furnish and erect temporary chain link fence in accordance with Section 866 of the *Standard Specifications.*

MATERIALS

Construct temporary chain link fence with materials in accordance with Section 1050 of the *Standard Specifications* except that all components of the fence shall be fusion bonded black vinyl coated.

CONSTRUCTION METHODS

Construction of the temporary chain link fence shall be in accordance with Section 866 of the *Standard Specifications*. The fence shall be installed, as directed by the Engineer, along the boundary of the Temporary Construction Easement at Morehead St shown in the Plans and described elsewhere within these Special Provisions. Fasten the chain link fence to the existing fence on either end to the satisfaction of the Engineer.

MEASUREMENT AND PAYMENT

Temporary Chain Link Fence, 60" Fabric will be measured and paid in linear feet of fence measured in place from center of each post that has been completed and accepted.

Such price and payment includes, but is not limited to, clearing and grading; and furnishing and installing fence fabric, line and terminal posts, post braces, tie wires, stretcher bars, top rails, tension wire, concrete, and all other materials necessary to complete the temporary fence.

Payment will be made under:

Pay Item	Pay Unit
Temporary Chain Link Fence, 60" Fabric	LF

DocuSign Envelope ID: A00C9972-C128-4C1F-A509-E01552B320AD

DECORATIVE FENCE RESET

DESCRIPTION

Remove, store and reset in original location a portion of the existing decorative fence along Morehead St as directed by the Engineer.

CONSTRUCTION METHODS

Reset the existing decorative fence in accordance with Article 867-2 of the Standard Specifications and as directed by the Engineer.

MEASUREMENT AND PAYMENT

Decorative Fence Reset will be measured and paid in the linear feet of decorative fence that has been acceptably reset. Measurement will be made along the decorative fence after it has been reset from center of end post to center of end post.

Such price and payment includes, but is not limited to, removing, hauling, storing and re-erecting the existing decorative fence; and furnishing and installing any fence components unnecessarily damaged by the Contractor's forces.

Payment will be made under:

Pay Item	Pay Unit
Decorative Fence Reset	LF

RR-47

INCORPORATION OF AND REVISIONS TO APPENDIX A, NORFOLK SOUTHERN STANDARD SPECIAL PROVISIONS FOR PROTECTION OF RAILWAY INTERESTS:

The Norfolk Southern – Standard Special Provisions for Protection of Railway Interests are incorporated into this document and can be found in Appendix A. The provisions in this proposal document shall govern.

Make the following changes wherever applicable to Appendix A, Norfolk Southern Standard Special Provisions for Protection of Railway Interests:

Replace all references to the "Project Sponsor" and/or "Sponsor" with the "Department."

The last sentence of the final paragraph in Section 1 of Appendix A which reads: "These terms and conditions are subject to change without notice, from time to time in the sole discretion of the Railroad. Contractor must request from Railroad and follow the latest version of these provisions prior to commencing work." shall not apply to this proposal.

All directives from the Railroad Engineer shall require approval from the Engineer. Nothing in the Norfolk Southern Standard Special Provisions for Protection of Railway Interests shall override the Authority of the Engineer, see Section 105-1 of the *Standard Specifications*.

All correspondence, communication, and/or submittals to be sent to the Railroad shall first be sent to the Engineer. The Engineer will then notify the contractor as to whether NCDOT Rail Division will forward the information to Norfolk Southern or whether the contractor shall send to Norfolk Southern.

On this contract, in the interest of safety, all requirements for beginning or performing work in the railroad rights-of-way as identified in Appendix A, shall be deemed to apply to all work within 25 feet of the centerline of an active railroad track or the proposed tracks, all costs and schedule impacts including but not limited to: generation of right of way entry permit; review and comment resolution; compliance and updates to the right of way entry permit based on field conditions will be incidental to the Mobilization Bid item of the contract.

Where a cost is indicated to be "Project Cost" it shall be assigned between the Contractor and the Department in accordance with the terms of the contract.

Where Roadway Worker Protection Training courses are required add that this course shall be taken annually through an NSR-approved vendor by all contractor or sub-contractor personnel working on NSR Right of Way or adjacent to NSR operated tracks.

Additional information about E-Railsafe certification requirements and responsibilities can be found at: http://www.e-railsafe.com/ .

result in the removal of the individual or individuals responsible for violation of policies. Depending upon the severity of the violation as determined by the Railroad Engineer, RWIC/flagman or the Engineer, the individual or individuals implicated must leave the RR right of way within 1 hour of notification of the violation. Depending on the severity of the violation, the individual or individuals who were involved in the incident may be able to return to the job the following day. That determination will be made by the RWIC and the Engineer on site. The individual or individuals will be notified if they are allowed to return the following day by the close of business the day of the occurrence. If they are not allowed to return the next day, the contractor may file an appeal to the Engineer requesting the individual or individuals accused of the violation be allowed to return to the job. The Engineer will then notify the Railroad of the appeal and a meeting will be held to determine if the individual or individuals will or will not be allowed to return to the job. The individual or individuals alleged to have committed the violation will not be allowed on the project until after the Railroad Engineer and Engineer have reviewed the appeal and made a determination if the individual or individuals may return. If a person is allowed return to the site after the appeal process and a second violation of policies occurs, that will be grounds for permanent removal of the individual from the worksite. This does not only apply to individuals, but may apply to entire crews as well depending on the circumstances and severity of the violation of policy. The contractor shall have no claims whatsoever against the Railroad or the Department for any delays or additional cost incurred as a result of safety violations and removal of the individual or individuals from the job.

Add the following section:

FEDERAL RAILROAD ADMINISTRATION (FRA) SAFETY REQUIREMENTS

In addition to NSR safety guidelines, the Contractor will be required to adhere to the safety requirements of the Federal Railroad Administration and comply with Title 49, Volume 4, Chapter 2, Part 213 and 214 of the Code of Federal Regulations. This information can be found at the following link:

https://www.gpo.gov/fdsys/granule/CFR-2011-title49-vol4/CFR-2011-title49-vol4-part213

The FRA may conduct inspections on this project and fines can be levied against both the individual cited and the contractor for violations of these policies. The contractor shall have no claims whatsoever against the Railroad or the Department for any delays or additional cost incurred as a result of violations and fines for noncompliance with the above FRA guidelines.

Any and all temporary shoring which is subject to railroad loading, whether included in the contract plans or designed by the contractor, has been and shall be designed to meet the requirements of railroad loading and the requirements laid out in Appendix A and also shall be constructed, installed, operated, removed, and/or abandoned in place as required by the terms of Appendix A.

STANDARD SHORING: **(SPECIAL)**

Description

This provision only applies to temporary shoring that is required for the maintenance of highway traffic as identified in the Transportation Management Plan.

Standard shoring includes standard temporary shoring and standard temporary mechanically stabilized earth (MSE) walls. At the Contractor's option, use standard shoring as noted in the plans or as directed. When using standard shoring, a temporary shoring design submittal is not required. Construct standard shoring based on actual elevations and shoring dimensions in accordance with the contract and Geotechnical Standard Detail No. 1801.01 or 1801.02.

Define "standard temporary shoring" as cantilever shoring that meets the standard temporary shoring detail (Geotechnical Standard Detail No. 1801.01). Define "standard temporary wall" as a temporary MSE wall with geotextile or geogrid reinforcement that meets the standard temporary wall detail (Geotechnical Standard Detail No. 1801.02). Define "standard temporary geotextile wall" as a standard temporary wall with geotextile reinforcement and "standard temporary geogrid wall" as a standard temporary wall with geogrid reinforcement.

Provide positive protection for standard shoring at locations shown in the plans and as directed. See *Temporary Shoring* provision for positive protection types and definitions.

Materials

Refer to the *Standard Specifications*.

Item	Section
Concrete Barrier Materials	1170-2
Flowable Fill, Excavatable	1000-6
Geosynthetics	1056
Neat Cement Grout, Type 1	1003
Portland Cement Concrete, Class A	1000
Select Materials	1016
Steel Beam Guardrail Materials	862-2
Steel Sheet Piles and H-Piles	1084
Untreated Timber	1082-2
Welded Wire Reinforcement	1070-3

Provide Type 6 material certifications for shoring materials. Use Class IV select material for temporary guardrail. Use Class A concrete that meets Article 450-2 of the *Standard Specifications* or grout for drilled-in piles.

Based on actual shoring height, positive protection, groundwater elevation, slope or surcharge case and traffic impact at each standard temporary shoring location, use sheet piles with the minimum required section modulus or H-piles with the sizes shown in Geotechnical Standard Detail No. 1801.01. Use untreated timber with a thickness of at least 3" and a bending stress of at least 1,000 psi for timber lagging.

(A) Shoring Backfill

Line #	Item Number	Sec #	Description	Quantity	Unit Cost	Amount
			ROADWAY ITEMS			
0001	0000100000-N	800	MOBILIZATION	Lump Sum	L.S.	
0002	0000400000-N	801	CONSTRUCTION SURVEYING	Lump Sum	L.S.	
0003	0000500000-N	801	SUPPLEMENTAL FIELD SURVEYING	20 HR		
0004	0000600000-N	801	SUPPLEMENTAL SURVEYING OFFICE CALCULATIONS	10 HR		
0005	0000700000-N	SP	FIELD OFFICE	Lump Sum	L.S.	
0006	0000915000-N	SP	GENERIC MISCELLANEOUS ITEM BOA MOBILIZATION	4 EA		
0007	0001000000-E	200	CLEARING & GRUBBING .. ACRE(S)	Lump Sum	L.S.	
0008	0008000000-E	200	SUPPLEMENTARY CLEARING & GRUB-BING	1 ACR		
0009	0022000000-E	225	UNCLASSIFIED EXCAVATION	2,950 CY		
0010	0036000000-E	225	UNDERCUT EXCAVATION	1,300 CY		
0011	0106000000-E	230	BORROW EXCAVATION	29,400 CY		
0012	0156000000-E	250	REMOVAL OF EXISTING ASPHALT PAVEMENT	5,870 SY		
0013	0163000000-E	250	REMOVAL OF EXISTING CONCRETE PAVEMENT	60 SY		
0014	0185000000-E	250	BREAKING OF EXISTING CONCRETE PAVEMENT	880 SY		
0015	0192000000-N	260	PROOF ROLLING	11 HR		
0016	0194000000-E	265	SELECT GRANULAR MATERIAL, CLASS III	84,400 CY		
0017	0196000000-E	270	GEOTEXTILE FOR SOIL STABILIZA-TION	1,400 SY		
0018	0199000000-E	SP	TEMPORARY SHORING	3,900 SF		

Line #	Item Number	Sec #	Description	Quantity	Unit Cost	Amount
0019	0223000000-E	275	ROCK PLATING	1,015 SY		
0020	0248000000-N	SP	GENERIC GRADING ITEM SELECT DEMOLITION OF CONCRETE SHEET PILE WALL	Lump Sum	L.S.	
0021	0248000000-N	SP	GENERIC GRADING ITEM SELECT DEMOLITION OF CRIB WALL	Lump Sum	L.S.	
0022	0255000000-E	SP	GENERIC GRADING ITEM EARTH MOUND	5 TON		
0023	0255000000-E	SP	GENERIC GRADING ITEM HAULING AND DISPOSAL OF CONTAMINATED SOIL	4,555 TON		
0024	0255000000-E	SP	GENERIC GRADING ITEM SURGE STONE	200 TON		
0025	0257000000-E	SP	GENERIC GRADING ITEM RAILROAD SIGNAL CONDUIT	3,000 LF		
0026	0318000000-E	300	FOUNDATION CONDITIONING MATE-RIAL, MINOR STRUCTURES	440 TON		
0027	0320000000-E	300	FOUNDATION CONDITIONING GEO-TEXTILE	1,000 SY		
0028	0335000000-E	305	**" DRAINAGE PIPE (8")	170 LF		
0029	0366000000-E	310	15" RC PIPE CULVERTS, CLASS III	324 LF		
0030	0372000000-E	310	18" RC PIPE CULVERTS, CLASS III	252 LF		
0031	0378000000-E	310	24" RC PIPE CULVERTS, CLASS III	92 LF		
0032	0536000000-E	310	***" HDPE PIPE CULVERTS (12")	156 LF		
0033	0536000000-E	310	***" HDPE PIPE CULVERTS (15")	280 LF		
0034	0536000000-E	310	***" HDPE PIPE CULVERTS (18")	68 LF		

Line #	Item Number	Sec #	Description	Quantity	Unit Cost	Amount
0035	0536000000-E	310	**** HDPE PIPE CULVERTS (30")	432 LF		
0036	0995000000-E	340	PIPE REMOVAL	480 LF		
0037	0996000000-N	350	PIPE CLEAN OUT	1 EA		
0038	1011000000-N	500	FINE GRADING	Lump Sum	L.S.	
0039	1099500000-E	505	SHALLOW UNDERCUT	100 CY		
0040	1099700000-E	505	CLASS IV SUBGRADE STABILIZATION	200 TON		
0041	1220000000-E	545	INCIDENTAL STONE BASE	225 TON		
0042	1297000000-E	607	MILLING ASPHALT PAVEMENT, **** DEPTH (3")	3,560 SY		
0043	1491000000-E	610	ASPHALT CONC BASE COURSE, TYPE B25.0C	960 TON		
0044	1503000000-E	610	ASPHALT CONC INTERMEDIATE COURSE, TYPE I19.0C	30 TON		
0045	1523000000-E	610	ASPHALT CONC SURFACE COURSE, TYPE S9.5C	940 TON		
0046	1575000000-E	620	ASPHALT BINDER FOR PLANT MIX	105 TON		
0047	1693000000-E	654	ASPHALT PLANT MIX, PAVEMENT REPAIR	245 TON		
0048	2022000000-E	815	SUBDRAIN EXCAVATION	224 CY		
0049	2026000000-E	815	GEOTEXTILE FOR SUBSURFACE DRAINS	1,000 SY		
0050	2036000000-E	815	SUBDRAIN COARSE AGGREGATE	168 CY		
0051	2044000000-E	815	6" PERFORATED SUBDRAIN PIPE	1,000 LF		
0052	2070000000-N	815	SUBDRAIN PIPE OUTLET	2 EA		

Line #	Item Number	Sec #	Description	Quantity	Unit Cost	Amount
0053	2077000000-E	815	6" OUTLET PIPE	12 LF		
0054	2253000000-E	840	PIPE COLLARS	0.66 CY		
0055	2275000000-E	SP	FLOWABLE FILL	36 CY		
0056	2286000000-N	840	MASONRY DRAINAGE STRUCTURES	18 EA		
0057	2308000000-E	840	MASONRY DRAINAGE STRUCTURES	49.3 LF		
0058	2365000000-N	840	FRAME WITH TWO GRATES, STD 840.22	6 EA		
0059	2374000000-N	840	FRAME WITH GRATE & HOOD, STD 840.03, TYPE ** (F)	2 EA		
0060	2374000000-N	840	FRAME WITH GRATE & HOOD, STD 840.03, TYPE ** (G)	3 EA		
0061	2396000000-N	840	FRAME WITH COVER, STD 840.54	5 EA		
0062	2484000000-E	SP	GENERIC DRAINAGE ITEM 8" UNDERDRAIN	5,250 LF		
0063	2549000000-E	846	2'-6" CONCRETE CURB & GUTTER	600 LF		
0064	2591000000-E	848	4" CONCRETE SIDEWALK	1,440 SY		
0065	2612000000-E	848	6" CONCRETE DRIVEWAY	20 SY		
0066	2800000000-N	858	ADJUSTMENT OF CATCH BASINS	2 EA		
0067	2905000000-N	859	CONVERT EXISTING DROP INLET TO JUNCTION BOX	1 EA		
0068	3030000000-E	862	STEEL BEAM GUARDRAIL	1,350 LF		
0069	3045000000-E	862	STEEL BEAM GUARDRAIL, SHOP CURVED	300 LF		
0070	3105000000-N	862	STEEL BEAM GUARDRAIL TERMINAL SECTIONS	8 EA		

Line #	Item Number	Sec #	Description	Quantity	Unit Cost	Amount
0071	3150000000-N	862	ADDITIONAL GUARDRAIL POSTS	5 EA		
0072	3210000000-N	862	GUARDRAIL END UNITS, TYPE CAT-1	4 EA		
0073	3533000000-E	866	CHAIN LINK FENCE, **" FABRIC (72")	1,183 LF		
0074	3536000000-E	866	CHAIN LINK FENCE, 48" FABRIC	193 LF		
0075	3539000000-E	866	METAL LINE POSTS FOR **" CHAIN LINK FENCE (72")	102 EA		
0076	3542000000-E	866	METAL LINE POSTS FOR 48" CHAIN LINK FENCE	17 EA		
0077	3545000000-E	866	METAL TERMINAL POSTS FOR **" CHAIN LINK FENCE (72")	10 EA		
0078	3548000000-E	866	METAL TERMINAL POSTS FOR 48" CHAIN LINK FENCE	6 EA		
0079	3551000000-E	866	METAL GATE POSTS FOR **" CHAIN LINK FENCE, SINGLE GATE (72")	2 EA		
0080	3554000000-E	866	METAL GATE POSTS FOR **" CHAIN LINK FENCE, DOUBLE GATE (72")	2 EA		
0081	3564000000-E	866	SINGLE GATES, **" HIGH, **' WIDE, **' OPENING (72", 12', 12')	1 EA		
0082	3565000000-E	866	DOUBLE GATES, **" HIGH, **' WIDE, **' OPENING (72", 12', 24')	1 EA		
0083	3578000000-N	SP	GENERIC FENCING ITEM GATE	2 EA		
0084	3649000000-E	876	RIP RAP, CLASS B	18 TON		
0085	3656000000-E	876	GEOTEXTILE FOR DRAINAGE	795 SY		
0086	3832000000-E	SP	RAILROAD TRACK TO BE REMOVED	3,740 TF		

Line #	Item Number	Sec #	Description	Quantity	Unit Cost	Amount
0087	3884000000-N	SP	GENERIC TRACKWORK ITEM CROSSTIE DISPOSAL	2,120 EA		
0088	3885000000-E	SP	GENERIC TRACKWORK ITEM SUB-BALLAST	6,615 TON		
0089	4072000000-E	903	SUPPORTS, 3-LB STEEL U-CHANNEL	49 LF		
0090	4102000000-N	904	SIGN ERECTION, TYPE E	1 EA		
0091	4116100000-N	904	SIGN ERECTION, RELOCATE TYPE **** (GROUND MOUNTED) (E)	4 EA		
0092	4155000000-N	907	DISPOSAL OF SIGN SYSTEM, U-CHANNEL	2 EA		
0093	4192000000-N	907	DISPOSAL OF SUPPORT, U-CHANNEL	2 EA		
0094	4238000000-N	907	DISPOSAL OF SIGN, D, E OR F	4 EA		
0095	4400000000-E	1110	WORK ZONE SIGNS (STATIONARY)	421 SF		
0096	4410000000-E	1110	WORK ZONE SIGNS (BARRICADE MOUNTED)	173 SF		
0097	4415000000-N	1115	FLASHING ARROW BOARD	2 EA		
0098	4420000000-N	1120	PORTABLE CHANGEABLE MESSAGE SIGN	2 EA		
0099	4430000000-N	1130	DRUMS	50 EA		
0100	4445000000-E	1145	BARRICADES (TYPE III)	208 LF		
0101	4455000000-N	1150	FLAGGER	30 DAY		
0102	4465000000-N	1160	TEMPORARY CRASH CUSHIONS	2 EA		
0103	4470000000-N	1160	REMOVE & RESET TEMPORARY CRASH CUSHION	2 EA		
0104	4485000000-E	1170	PORTABLE CONCRETE BARRIER	275 LF		

Line #	Item Number	Sec #	Description	Quantity	Unit Cost	Amount
0105	4500000000-E	1170	REMOVE & RESET PORTABLE CONC-RETE BARRIER	373 LF		
0106	4507000000-E	1170	WATER FILLED BARRIER	224 LF		
0107	4516000000-N	1180	SKINNY DRUM	30 EA		
0108	4685000000-E	1205	THERMOPLASTIC PAVEMENT MARKING LINES (4", 90 MILS)	100 LF		
0109	4810000000-E	1205	PAINT PAVEMENT MARKING LINES (4")	1,300 LF		
0110	4847010000-E	1205	POLYUREA PAVEMENT MARKING LINES (4", 20 MILS)	1,000 LF		
0111	4850000000-E	1205	REMOVAL OF PAVEMENT MARKING LINES (4")	100 LF		
0112	4915000000-E	1264	7' U-CHANNEL POSTS	3 EA		
0113	4955000000-N	1264	OBJECT MARKERS (END OF ROAD)	3 EA		
0114	5325600000-E	1510	6" WATER LINE	109 LF		
0115	5325800000-E	1510	8" WATER LINE	14 LF		
0116	5326200000-E	1510	12" WATER LINE	372 LF		
0117	5327000000-E	1510	20" WATER LINE	60 LF		
0118	5329000000-E	1510	DUCTILE IRON WATER PIPE FITTINGS	3,100 LB		
0119	5540000000-E	1515	6" VALVE	2 EA		
0120	5558000000-E	1515	12" VALVE	2 EA		
0121	5606000000-E	1515	2" BLOW OFF	1 EA		
0122	5648000000-N	1515	RELOCATE WATER METER	1 EA		
0123	5649000000-N	1515	RECONNECT WATER METER	1 EA		

Line #	Item Number	Sec #	Description	Quantity	Unit Cost	Amount
0124	5672000000-N	1515	RELOCATE FIRE HYDRANT	1 EA		
0125	5673000000-E	1515	FIRE HYDRANT LEG	17 LF		
0126	5678400000-E	1515	6" LINE STOP	2 EA		
0127	5678600000-E	1515	8" LINE STOP	2 EA		
0128	5686500000-E	1515	WATER SERVICE LINE	29 LF		
0129	5691500000-E	1520	12" SANITARY GRAVITY SEWER	143 LF		
0130	5691900000-E	1520	24" SANITARY GRAVITY SEWER	504 LF		
0131	5775000000-E	1525	4' DIA UTILITY MANHOLE	2 EA		
0132	5776000000-E	1525	5' DIA UTILITY MANHOLE	4 EA		
0133	5781000000-E	1525	UTILITY MANHOLE WALL 4' DIA	4 LF		
0134	5782000000-E	1525	UTILITY MANHOLE WALL 5' DIA	10 LF		
0135	5800000000-E	1530	ABANDON 6" UTILITY PIPE	418 LF		
0136	5801000000-E	1530	ABANDON 8" UTILITY PIPE	919 LF		
0137	5802000000-E	1530	ABANDON 10" UTILITY PIPE	227 LF		
0138	5811000000-E	1530	ABANDON 18" UTILITY PIPE	524 LF		
0139	5815000000-N	1530	REMOVE WATER METER	9 EA		
0140	5816000000-N	1530	ABANDON UTILITY MANHOLE	6 EA		
0141	5828000000-N	1530	REMOVE UTILITY MANHOLE	3 EA		
0142	5888000000-E	SP	GENERIC UTILITY ITEM 8" CURED IN PLACE PIPE	517 LF		
0143	6000000000-E	1605	TEMPORARY SILT FENCE	7,200 LF		

Line #	Item Number	Sec #	Description	Quantity	Unit Cost	Amount
0144	6006000000-E	1610	STONE FOR EROSION CONTROL, CLASS A	330 TON		
0145	6009000000-E	1610	STONE FOR EROSION CONTROL, CLASS B	1,970 TON		
0146	6012000000-E	1610	SEDIMENT CONTROL STONE	1,160 TON		
0147	6015000000-E	1615	TEMPORARY MULCHING	15 ACR		
0148	6018000000-E	1620	SEED FOR TEMPORARY SEEDING	700 LB		
0149	6021000000-E	1620	FERTILIZER FOR TEMPORARY SEED-ING	3.5 TON		
0150	6024000000-E	1622	TEMPORARY SLOPE DRAINS	1,850 LF		
0151	6029000000-E	SP	SAFETY FENCE	500 LF		
0152	6030000000-E	1630	SILT EXCAVATION	3,700 CY		
0153	6036000000-E	1631	MATTING FOR EROSION CONTROL	28,000 SY		
0154	6037000000-E	SP	COIR FIBER MAT	50 SY		
0155	6042000000-E	1632	1/4" HARDWARE CLOTH	1,000 LF		
0156	6071012000-E	SP	COIR FIBER WATTLE	1,050 LF		
0157	6071020000-E	SP	POLYACRYLAMIDE (PAM)	500 LB		
0158	6071030000-E	1640	COIR FIBER BAFFLE	1,200 LF		
0159	6084000000-E	1660	SEEDING & MULCHING	6 ACR		
0160	6087000000-E	1660	MOWING	6 ACR		
0161	6090000000-E	1661	SEED FOR REPAIR SEEDING	150 LB		
0162	6093000000-E	1661	FERTILIZER FOR REPAIR SEEDING	0.75 TON		
0163	6096000000-E	1662	SEED FOR SUPPLEMENTAL SEEDING	425 LB		

Line #	Item Number	Sec #	Description	Quantity	Unit Cost	Amount
0164	6108000000-E	1665	FERTILIZER TOPDRESSING	12.25 TON		
0165	6114500000-N	1667	SPECIALIZED HAND MOWING	30 MHR		
0166	6117000000-N	SP	RESPONSE FOR EROSION CONTROL	100 EA		
0167	6117500000-N	SP	CONCRETE WASHOUT STRUCTURE	5 EA		
0168	6132000000-N	SP	GENERIC EROSION CONTROL ITEM SUPPLEMENTAL RESPONSE FOR EROSION CONTROL	10 EA		
0292	3575000000-E	SP	GENERIC FENCING ITEM TEMP CHAIN LINK FENCE, 60" FABRIC	195 LF		
0293	3575000000-E	SP	GENERIC FENCING ITEM DECORATIVE FENCE RESET	50 LF		
			CULVERT ITEMS			
0169	8126000000-N	414	CULVERT EXCAVATION, STA ****** (25+30.89-S1-)	Lump Sum	L.S.	
0170	8126000000-N	414	CULVERT EXCAVATION, STA ****** (29+35.21-S1-)	Lump Sum	L.S.	
0171	8126000000-N	414	CULVERT EXCAVATION, STA ****** (42+05.33-A1-)	Lump Sum	L.S.	
0172	8133000000-E	414	FOUNDATION CONDITIONING MATERIAL, BOX CULVERT	177 TON		
0173	8245000000-E	425	REINFORCING STEEL (CULVERT)	158,630 LB		
0174	8453000000-E	454	METHOD B DAMPPROOFING	17.6 SY		
0175	8806000000-N	SP	GENERIC CULVERT ITEM PDA TESTING	2 EA		
0176	8806000000-N	SP	GENERIC CULVERT ITEM PILE DRIVING EQUIPMENT SETUP FOR HP14X73 STEEL PILES	43 EA		

Line #	Item Number	Sec #	Description	Quantity	Unit Cost	Amount
0177	8811000000-E	SP	GENERIC CULVERT ITEM HP14X73 STEEL PILES	1,602 LF		
0178	8811000000-E	SP	GENERIC CULVERT ITEM METAL RAIL (ALUMINUM)	47.2 LF		
0179	8822000000-E	SP	GENERIC CULVERT ITEM WATERPROOFING	562 SY		
0180	8826000000-E	420	GENERIC CULVERT ITEM CLASS AA CONCRETE	646.6 CY		
			WALL ITEMS			
0181	8077000000-E	410	FOUNDATION EXCAVATION (RETAINING WALL)	2,693.7 CY		
0182	8252000000-E	425	REINFORCING STEEL (RETAINING WALL)	382,579 LB		
0183	8453000000-E	454	METHOD B DAMPPROOFING	905.2 SY		
0184	8834000000-N	SP	GENERIC RETAINING WALL ITEM 7" DIA MICROPILES	6 EA		
0185	8834000000-N	SP	GENERIC RETAINING WALL ITEM MICROPILE VERIFICATION TEST	6 EA		
0186	8834000000-N	SP	GENERIC RETAINING WALL ITEM PDA TESTING	2 EA		
0187	8834000000-N	SP	GENERIC RETAINING WALL ITEM PILE DRIVING EQUIPMENT SETUP FOR HP14X73 STEEL PILES	308 EA		
0188	8839000000-E	SP	GENERIC RETAINING WALL ITEM HP14X73 STEEL PILES	10,806.7 LF		
0189	8839000000-E	SP	GENERIC RETAINING WALL ITEM METAL RAIL (ALUMINUM)	594.4 LF		
0190	8839000000-E	SP	GENERIC RETAINING WALL ITEM METAL RAIL (STEEL) & FENCE	1,320.1 LF		

Line #	Item Number	Sec #	Description	Quantity	Unit Cost	Amount
0191	8847000000-E	SP	GENERIC RETAINING WALL ITEM PILE PANEL RETAINING WALLS	10,304.8 SF		
0192	8853000000-E	SP	GENERIC RETAINING WALL ITEM CLASS AA CONCRETE	2,296.9 CY		
			STRUCTURE ITEMS			
0193	8035000000-N	402	REMOVAL OF EXISTING STRUCTURE AT STATION ********** (15+39.55-S1-)	Lump Sum	L.S.	
0194	8035000000-N	402	REMOVAL OF EXISTING STRUCTURE AT STATION ********** (23+62.98-S2-)	Lump Sum	L.S.	
0195	8035000000-N	402	REMOVAL OF EXISTING STRUCTURE AT STATION ********** (28+12.88-S2-)	Lump Sum	L.S.	
0196	8035000000-N	402	REMOVAL OF EXISTING STRUCTURE AT STATION ********** (42+59.46-A1-)	Lump Sum	L.S.	
0197	8070000000-E	410	FOUNDATION EXCAVATION (BRIDGE)	1,600 CY		
0198	8091000000-N	410	FOUNDATION EXCAVATION FOR BENT ** AT STATION ********** (PIER 1, 18+79.37-S2-)	Lump Sum	L.S.	
0199	8091000000-N	410	FOUNDATION EXCAVATION FOR BENT ** AT STATION ********** (PIER 1, 23+62.98-S2-)	Lump Sum	L.S.	
0200	8091000000-N	410	FOUNDATION EXCAVATION FOR BENT ** AT STATION ********** (PIER 1, 28+12.88-S2-)	Lump Sum	L.S.	
0201	8091000000-N	410	FOUNDATION EXCAVATION FOR BENT ** AT STATION ********** (PIER 2, 18+79.37-S2-)	Lump Sum	L.S.	
0202	8091000000-N	410	FOUNDATION EXCAVATION FOR BENT ** AT STATION ********** (PIER 2, 28+12.88-S2-)	Lump Sum	L.S.	

Line #	Item Number	Sec #	Description	Quantity	Unit Cost	Amount
0203	8091000000-N	410	FOUNDATION EXCAVATION FOR BENT ** AT STATION ********** (PIER 3, 23+62.98-S2-)	Lump Sum	L.S.	
0204	8105500000-E	411	**'-**" DIA DRILLED PIERS IN SOIL (4'-6")	84.5 LF		
0205	8105500000-E	411	**'-**" DIA DRILLED PIERS IN SOIL (6'-0")	366.5 LF		
0206	8105600000-E	411	**'-**" DIA DRILLED PIERS NOT IN SOIL (4'-6")	86 LF		
0207	8105600000-E	411	**'-**" DIA DRILLED PIERS NOT IN SOIL (5'-6")	407 LF		
0208	8105600000-E	411	**'-**" DIA DRILLED PIERS NOT IN SOIL (6'-0")	90 LF		
0209	8111000000-E	411	PERMANENT STEEL CASING FOR **'-**" DIA DRILLED PIER (6'-0")	193.4 LF		
0210	8113000000-N	411	SID INSPECTIONS	20 EA		
0211	8114000000-N	411	SPT TESTING	20 EA		
0212	8115000000-N	411	CSL TESTING	20 EA		
0213	8121000000-N	412	UNCLASSIFIED STRUCTURE EXCAVATION AT STATION ******** (42+59.46-A1-)	Lump Sum	L.S.	
0214	8147000000-E	420	REINFORCED CONCRETE DECK SLAB	35,454.2 SF		
0215	8175000000-E	420	CLASS AA CONCRETE (BRIDGE)	7,995.3 CY		
0216	8217000000-E	425	REINFORCING STEEL (BRIDGE)	1,702,845 LB		
0217	8238000000-E	425	SPIRAL COLUMN REINFORCING STEEL (BRIDGE)	84,013 LB		
0218	8453000000-E	454	METHOD B DAMPPROOFING	1,690.8 SY		

Line #	Item Number	Sec #	Description	Quantity	Unit Cost	Amount
0219	8531000000-E	462	4" SLOPE PROTECTION	1,482.8 SY		
0220	8608000000-E	876	RIP RAP CLASS II (2'-0" THICK)	975 TON		
0221	8622000000-E	876	GEOTEXTILE FOR DRAINAGE	1,085 SY		
0222	8657000000-N	430	ELASTOMERIC BEARINGS	Lump Sum	L.S.	
0223	8860000000-N	SP	GENERIC STRUCTURE ITEM APPLICATION OF BRIDGE COATING	Lump Sum	L.S.	
0224	8860000000-N	SP	GENERIC STRUCTURE ITEM APPROX 160,000 LBS STRUCTURAL STEEL	Lump Sum	L.S.	
0225	8860000000-N	SP	GENERIC STRUCTURE ITEM APPROX 177,727 LBS STRUCTURAL STEEL	Lump Sum	L.S.	
0226	8860000000-N	SP	GENERIC STRUCTURE ITEM APPROX 177,963 LBS STRUCTURAL STEEL	Lump Sum	L.S.	
0227	8860000000-N	SP	GENERIC STRUCTURE ITEM APPROX 231,350 LBS STRUCTURAL STEEL	Lump Sum	L.S.	
0228	8860000000-N	SP	GENERIC STRUCTURE ITEM APPROX 233,588 LBS STRUCTURAL STEEL STA 28+12.88-S2-	Lump Sum	L.S.	
0229	8860000000-N	SP	GENERIC STRUCTURE ITEM APPROX 233,588 LBS STRUCTURAL STEEL STA 28+17.22-S1-	Lump Sum	L.S.	
0230	8860000000-N	SP	GENERIC STRUCTURE ITEM APPROX 338,035 LBS STRUCTURAL STEEL STA 23+62.98-S2-	Lump Sum	L.S.	
0231	8860000000-N	SP	GENERIC STRUCTURE ITEM APPROX 338,035 LBS STRUCTURAL STEEL STA 23+65.83-S1-	Lump Sum	L.S.	
0232	8860000000-N	SP	GENERIC STRUCTURE ITEM APPROX 764,875 LBS STRUCTURAL STEEL	Lump Sum	L.S.	

Line #	Item Number	Sec #	Description	Quantity	Unit Cost	Amount
0233	8860000000-N	SP	GENERIC STRUCTURE ITEM ASBESTOS ASSESSMENT	Lump Sum	L.S.	
0234	8860000000-N	SP	GENERIC STRUCTURE ITEM PAINTING OF STRUCTURAL STEEL	Lump Sum	L.S.	
0235	8860000000-N	SP	GENERIC STRUCTURE ITEM PLATFORM STRUCTURE DRAINAGE SYSTEM	Lump Sum	L.S.	
0236	8860000000-N	SP	GENERIC STRUCTURE ITEM SELF LUBRICATING EXPANSION BEARING ASSEMBLIES	Lump Sum	L.S.	
0237	8860000000-N	SP	GENERIC STRUCTURE ITEM STRUCTURE DRAINAGE SYSTEM AT STA 15+39.55-S1-	Lump Sum	L.S.	
0238	8860000000-N	SP	GENERIC STRUCTURE ITEM STRUCTURE DRAINAGE SYSTEM AT STA 18+79.37-S2-	Lump Sum	L.S.	
0239	8860000000-N	SP	GENERIC STRUCTURE ITEM STRUCTURE DRAINAGE SYSTEM AT STA 18+82.25-S1-	Lump Sum	L.S.	
0240	8860000000-N	SP	GENERIC STRUCTURE ITEM STRUCTURE DRAINAGE SYSTEM AT STA 23+62.98-S2-	Lump Sum	L.S.	
0241	8860000000-N	SP	GENERIC STRUCTURE ITEM STRUCTURE DRAINAGE SYSTEM AT STA 23+65.83-S1-	Lump Sum	L.S.	
0242	8860000000-N	SP	GENERIC STRUCTURE ITEM STRUCTURE DRAINAGE SYSTEM AT STA 28+12.88-S2-	Lump Sum	L.S.	
0243	8860000000-N	SP	GENERIC STRUCTURE ITEM STRUCTURE DRAINAGE SYSTEM AT STA 28+17.22-S1-	Lump Sum	L.S.	
0244	8860000000-N	SP	GENERIC STRUCTURE ITEM STRUCTURE DRAINAGE SYSTEM AT STA 42+59.46-A1-	Lump Sum	L.S.	
0245	8860000000-N	SP	GENERIC STRUCTURE ITEM STRUCTURE GROUNDING AND BONDING AT STA 23+65.83-S1-	Lump Sum	L.S.	

Line #	Item Number	Sec #	Description	Quantity	Unit Cost	Amount
0246	8860000000-N	SP	GENERIC STRUCTURE ITEM TEMPORARY RAILROAD SHORING/ ABUTMENT 1 (23+62.98-S2-)	Lump Sum	L.S.	
0247	8860000000-N	SP	GENERIC STRUCTURE ITEM TEMPORARY RAILROAD SHORING/ ABUTMENT 1 (28+12.88-S2-)	Lump Sum	L.S.	
0248	8860000000-N	SP	GENERIC STRUCTURE ITEM TEMPORARY RAILROAD SHORING/ ABUTMENT 1 (42+59.46-A1-)	Lump Sum	L.S.	
0249	8860000000-N	SP	GENERIC STRUCTURE ITEM TEMPORARY RAILROAD SHORING/ ABUTMENT 2 (23+62.98-S2-)	Lump Sum	L.S.	
0250	8860000000-N	SP	GENERIC STRUCTURE ITEM TEMPORARY RAILROAD SHORING/ ABUTMENT 2 (28+12.88-S2-)	Lump Sum	L.S.	
0251	8860000000-N	SP	GENERIC STRUCTURE ITEM TEMPORARY RAILROAD SHORING/ ABUTMENT 2 (42+59.46-A1-)	Lump Sum	L.S.	
0252	8860000000-N	SP	GENERIC STRUCTURE ITEM TEMPORARY RAILROAD SHORING/ PIER 1 (18+79.37-S2-)	Lump Sum	L.S.	
0253	8860000000-N	SP	GENERIC STRUCTURE ITEM TEMPORARY RAILROAD SHORING/ PIER 1 (23+62.98-S2-)	Lump Sum	L.S.	
0254	8860000000-N	SP	GENERIC STRUCTURE ITEM TEMPORARY RAILROAD SHORING/ PIER 1 (28+12.88-S2-)	Lump Sum	L.S.	
0255	8860000000-N	SP	GENERIC STRUCTURE ITEM TEMPORARY RAILROAD SHORING/ PIER 2 (18+79.37-S2-)	Lump Sum	L.S.	
0256	8860000000-N	SP	GENERIC STRUCTURE ITEM TEMPORARY RAILROAD SHORING/ PIER 2 (28+12.88-S2-)	Lump Sum	L.S.	
0257	8860000000-N	SP	GENERIC STRUCTURE ITEM TEMPORARY RAILROAD SHORING/ PIER 3 (23+62.98-S2-)	Lump Sum	L.S.	
0258	8867000000-E	SP	GENERIC STRUCTURE ITEM ABRASIVE METAL NOSINGS	999 LF		

Line #	Item Number	Sec #	Description	Quantity	Unit Cost	Amount
0259	8867000000-E	SP	GENERIC STRUCTURE ITEM ARCHITECTURAL FIN RAIL (ALUMINUM HAND RAIL AND FIN ASSEMBLY)	400.4 LF		
0260	8867000000-E	SP	GENERIC STRUCTURE ITEM ARMORLESS EXPANSION JOINT SYSTEM	335 LF		
0261	8867000000-E	SP	GENERIC STRUCTURE ITEM CONCRETE PARAPET	2,205.2 LF		
0262	8867000000-E	SP	GENERIC STRUCTURE ITEM HP14X73 STEEL PILES	27,972.7 LF		
0263	8867000000-E	SP	GENERIC STRUCTURE ITEM METAL RAIL (ALUMINUM)	842.7 LF		
0264	8867000000-E	SP	GENERIC STRUCTURE ITEM METAL RAIL (STEEL) & FENCE	660.4 LF		
0265	8867000000-E	SP	GENERIC STRUCTURE ITEM PLATFORM EXPANSION JOINTS	315 LF		
0266	8867000000-E	SP	GENERIC STRUCTURE ITEM PLATFORM PAINT	2,200 LF		
0267	8867000000-E	SP	GENERIC STRUCTURE ITEM PREDRILLING FOR PILES	128 LF		
0268	8867000000-E	SP	GENERIC STRUCTURE ITEM RUB RAIL	2,200 LF		
0269	8867000000-E	SP	GENERIC STRUCTURE ITEM SOIL/ROCK BORING	640 LF		
0270	8867000000-E	SP	GENERIC STRUCTURE ITEM STAINLESS STEEL HANDRAILS	370 LF		
0271	8867000000-E	SP	GENERIC STRUCTURE ITEM STAINLESS STEEL RAILINGS	368 LF		
0272	8867000000-E	SP	GENERIC STRUCTURE ITEM TACTILE WARNING SURFACE	2,200 LF		
0273	8889000000-E	SP	GENERIC STRUCTURE ITEM REINFORCING STEEL, BLACK (GRADE 75)	139,300 LB		

Line #	Item Number	Sec #	Description	Quantity	Unit Cost	Amount
0274	8889000000-E	SP	GENERIC STRUCTURE ITEM REINFORCING STEEL, GALVANIZED (GRADE 75)	67,320 LB		
0275	8889000000-E	SP	GENERIC STRUCTURE ITEM SPIRAL REINFORCING STEEL, BLACK (GRADE 75)	69,800 LB		
0276	8889000000-E	SP	GENERIC STRUCTURE ITEM SPIRAL REINFORCING STEEL, GALVANIZED (GRADE 75)	18,000 LB		
0277	8892000000-E	SP	GENERIC STRUCTURE ITEM LIQUID FLOOR TREATMENTS	38,400 SF		
0278	8892000000-E	SP	GENERIC STRUCTURE ITEM STAINLESS STEEL ENCLOSURE	442 SF		
0279	8893000000-E	SP	GENERIC STRUCTURE ITEM FOUNDATION WATERPROOFING	2,400 SY		
0280	8893000000-E	SP	GENERIC STRUCTURE ITEM WATERPROOFING	3,048.2 SY		
0281	8897000000-N	SP	GENERIC STRUCTURE ITEM 3'-6" STAINLESS STEEL GATES	3 EA		
0282	8897000000-N	SP	GENERIC STRUCTURE ITEM 7" DIA MICROPILES	12 EA		
0283	8897000000-N	SP	GENERIC STRUCTURE ITEM 8'-0" STAINLESS STEEL GATES	2 EA		
0284	8897000000-N	SP	GENERIC STRUCTURE ITEM HINGE	30 EA		
0285	8897000000-N	SP	GENERIC STRUCTURE ITEM LIGHTNING PROTECTION SYSTEM	2 EA		
0286	8897000000-N	SP	GENERIC STRUCTURE ITEM MICROPILE VERIFICATION TEST	12 EA		
0287	8897000000-N	SP	GENERIC STRUCTURE ITEM PANIC DEVICE	4 EA		
0288	8897000000-N	SP	GENERIC STRUCTURE ITEM PDA TESTING	20 EA		

Line #	Item Number	Sec #	Description	Quantity	Unit Cost	Amount
0289	8897000000-N	SP	GENERIC STRUCTURE ITEM PILE DRIVING EQUIPMENT SETUP FOR HP14X73 STEEL PILES	593 EA		
0290	8897000000-N	SP	GENERIC STRUCTURE ITEM STEEL PILE POINTS	12 EA		
0291	8897000000-N	SP	GENERIC STRUCTURE ITEM THERMAL INTEGRITY PROFILER	20 EA		

HNTB
HNTB NORTH CAROLINA, P.C.
343 E. Six Forks Road, Suite 200
Raleigh, North Carolina 27609
NC License No: C-1554

PROJECT REFERENCE NO.	SHEET NO.
P-5705BA	3B
R/W SHEET NO.	

DATE: MARCH 16, 2018

SUMMARY OF EARTHWORK
(IN CUBIC YARDS)

LOCATION	UNCLASSIFIED EXCAVATION	UNDERCUT	EMBT +.%	BORROW	WASTE
SUMMARY #1					
-S1- STA 10+00 TO STA 14+53.05	251	0	7,687	7,436	0
#1 TOTAL	251	0	7,687	7,436	0
SUMMARY #2					
-S1- STA 16+32.05 TO STA 18+22.09	25	0	16,307	16,282	0
#2 TOTAL	25	0	16,307	16,282	0
SUMMARY #3					
-S1- STA 19+42.42 TO STA 22+60.07	303	0	15,500	15,197	0
#3 TOTAL	303	0	15,500	15,197	0
SUMMARY #4					
-S1- STA 24+28.57.05 TO STA 27+57.21	501	0	14,535	14,034	0
#4 TOTAL	501	0	14,535	14,034	0
SUMMARY #5					
-S1- STA 28+76.21 TO STA 41+95.22	1,082	0	58,473	57,391	0
#5 TOTAL	1,082	0	58,473	57,391	0
SUMMARY #6					
-S1- STA 43+26.22 TO STA 46+00.00	195	0	572	377	0
#6 TOTAL	195	0	572	377	0
SUMMARIES 1-6 TOTAL	2,357	0	113,074	110,717	0
ADJUSTMENT DUE TO OFFSITE DISPOSAL	570		656	656	570
BORROW REDUCTION DUE TO SELECT MATERIAL			-83,400	-83,400	
PROJECT TOTAL	2,927	0	30,330	27,973	570
ESTIMATE 5% FOR TOPSOIL ON BORROW PITS				1,399	
GRAND TOTAL	2,927	0	30,330	29,372	570
SAY	2,950	0		29,400	

EST. 200 TN CLASS IV SUBGRADE STABILIZATION

* THESE EARTHWORK QUANTITIES ARE BASED IN PART ON SUBSURFACE DATA PROVIDED BY THE GEOTECHNICAL ENGINEERING UNIT.

DocuSign Envelope ID: EE73D197-1F1E-48B5-9045-71D960EE7F03

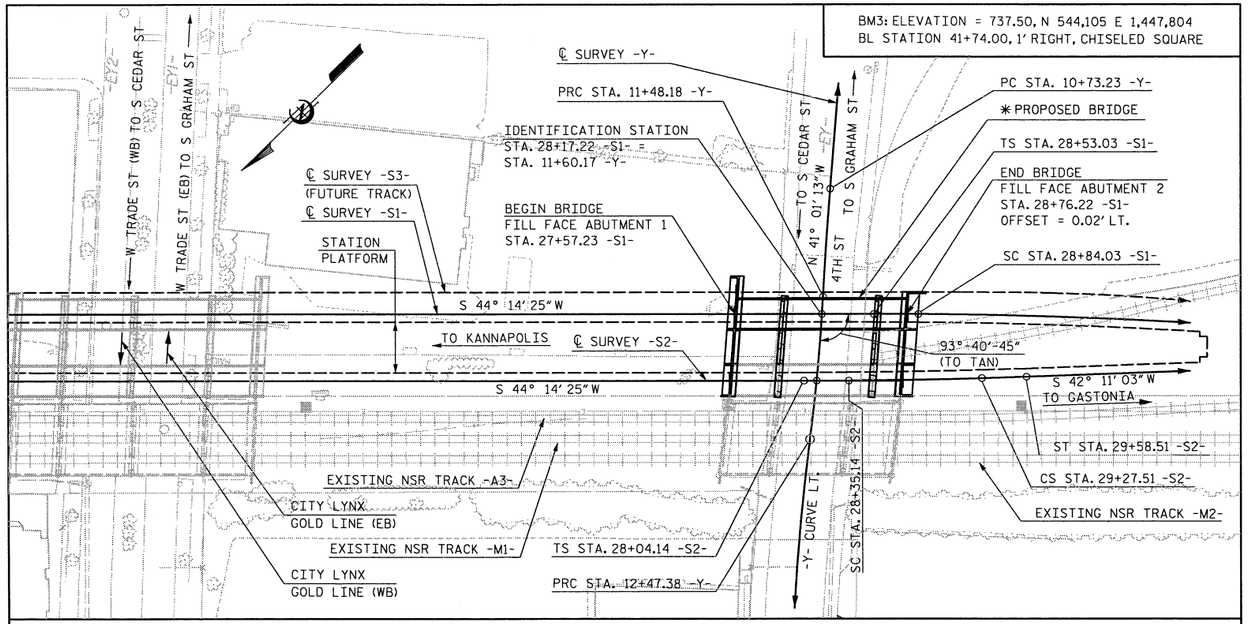

LOCATION SKETCH

FOR UTILITY INFORMATION, SEE UTILITY PLANS AND SPECIAL PROVISIONS.

NOTE:

FOR SUBSTRUCTURE BILL OF MATERIAL, REFER TO "BRIDGE ON STATION TRACK 2 OVER W 4TH STREET" PLANS.

✱ SUBSTRUCTURE SHOWN FOR INFORMATION ONLY. FOR SUBSTRUCTURE SHEETS, REFER TO "BRIDGE ON STATION TRACK 2 OVER W 4TH STREET" PLANS.

TOTAL BILL OF MATERIAL

	REINFORCED CONCRETE DECK SLAB	⚠ APPROX. 233,588 LBS. STRUCTURAL STEEL	PAINTING OF STRUCTURAL STEEL	WATERPROOFING	CONCRETE PARAPET	SELF-LUBRICATING EXPANSION BEARING ASSEMBLIES	STRUCTURE DRAINAGE SYSTEM AT STA. 28+17.22 -S1-	APPLICATION OF BRIDGE COATING
	SQ. FEET	LUMP SUM	LUMP SUM	SQ. YARDS	L.F.	LUMP SUM	LUMP SUM	LUMP SUM
SUPERSTRUCTURE	2,568.8	LUMP SUM	LUMP SUM	265.6	231.4	LUMP SUM	LUMP SUM	LUMP SUM
TOTAL	2,568.8	LUMP SUM	LUMP SUM	265.6	231.4	LUMP SUM	LUMP SUM	LUMP SUM

PROJECT NO. P-5705BA
MECKLENBURG COUNTY
STATION: POT STA. 28+17.22 -S1-

SHEET 2 OF 3

DocuSigned by:
Joel R. Rapp
5/2/2018

NORTH CAROLINA PROFESSIONAL SEAL 44886 ENGINEER JOEL RYAN RAPP

DOCUMENT NOT CONSIDERED FINAL UNLESS ALL SIGNATURES COMPLETED

STATE OF NORTH CAROLINA
DEPARTMENT OF TRANSPORTATION
RALEIGH

GENERAL DRAWING

LOCATION SKETCH
AND
TOTAL BILL OF MATERIAL

HNTB
HNTB NORTH CAROLINA, P.C.
NC License No. C-1554
343 E. Six Forks Rd., Suite 200, Raleigh, N.C. 27609

DRAWN BY B. VAUGHN DATE 8/17
CHECKED BY R. RAPP DATE 9/17
DWG. NO. 2

REVISIONS						
NO.	BY	DATE	NO.	BY	DATE	
1	JRR	05/02/2018	3			
2			4			

SHEET NO. S6-2
TOTAL SHEETS 19

DocuSign Envelope ID: EE73D197-1F1E-48B5-9045-71D960EE7F03

0012DEL_P28
1001ADD_P28

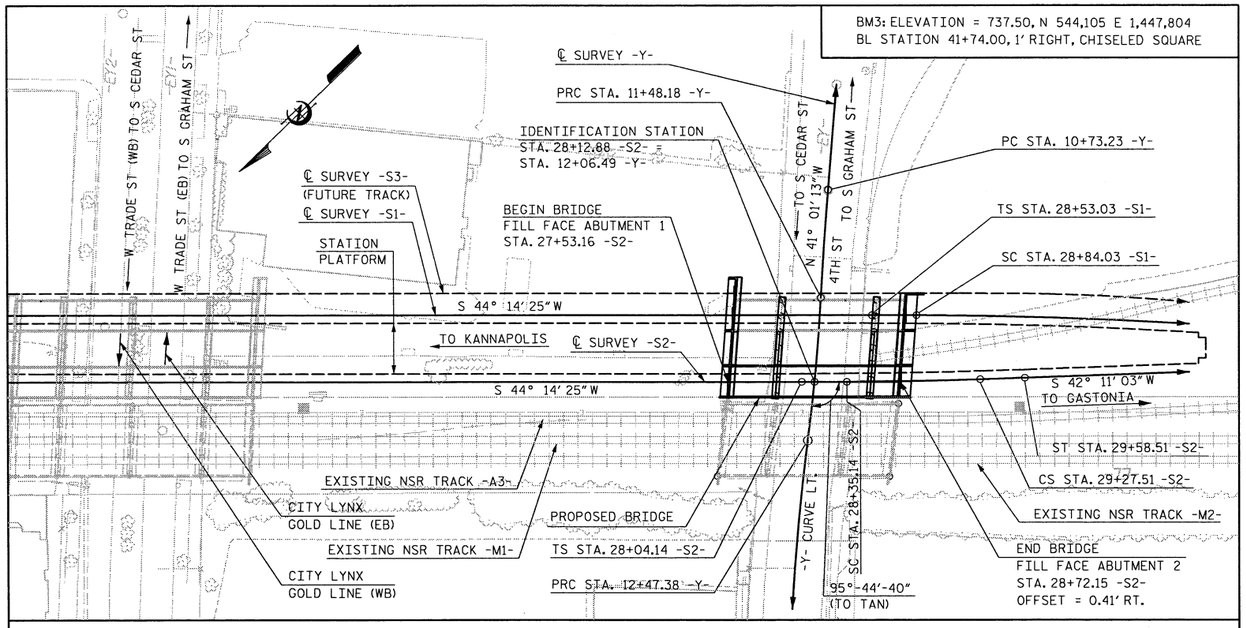

LOCATION SKETCH

FOR UTILITY INFORMATION, SEE UTILITY PLANS AND SPECIAL PROVISIONS.

NOTE:

FOR TRACK 1 SUPERSTRUCTURE BILL OF MATERIAL, REFER TO "BRIDGE ON STATION TRACK 1 OVER W 4TH STREET" PLANS.

TOTAL BILL OF MATERIAL

	TEMP. RAILROAD SHORING/ABUT. 1 STA. 28+12.88 -S2-	TEMP. RAILROAD SHORING/PIER 1 STA. 28+12.88 -S2-	TEMP. RAILROAD SHORING/PIER 2 STA. 28+12.88 -S2-	TEMP. RAILROAD SHORING/ABUT. 2 STA. 28+12.88 -S2-	REMOVAL OF EXIST. STRUCT. AT STA. 28+12.88 -S2-	FOUND. EXCAV. FOR PIER 1 AT STA. 28+12.88 -S2-	FOUND. EXCAV. FOR PIER 2 AT STA. 28+12.88 -S2-	PREDRILLING FOR PILES	PDA TESTING	REINFORCED CONCRETE DECK SLAB	CLASS AA CONCRETE	REINFORCING STEEL	SPIRAL COLUMN REINFORCING STEEL	⚠ APPROX. 233,588 LBS. STRUCTURAL STEEL	PAINTING OF STRUCTURAL STEEL
	LUMP SUM	LUMP SUM	LUMP SUM	LUMP SUM	LUMP SUM	LUMP SUM	LUMP SUM	L.F.	EACH	SQ. FEET	CU. YARDS	LBS.	LBS.	LUMP SUM	LUMP SUM
SUPERSTRUCTURE	———	———	———	———	———	———	———	———	———	2,617.3	———	———	———	LUMP SUM	LUMP SUM
ABUTMENT 1	LUMP SUM	———	———	———	———	———	———	———	1	———	227.5	22,293	———	———	———
PIER 1	———	LUMP SUM	———	———	———	LUMP SUM	———	128	1	———	301.2	64,276	5,383	———	———
PIER 2	———	———	LUMP SUM	———	———	———	LUMP SUM	———	1	———	285.9	63,422	4,878	———	———
ABUTMENT 2	———	———	———	LUMP SUM	———	———	———	———	1	———	239.9	25,318	———	———	———
TOTAL	LUMP SUM	LUMP SUM	LUMP SUM	LUMP SUM	LUMP SUM	LUMP SUM	LUMP SUM	128	4	2,617.3	1,054.5	175,309	10,261	LUMP SUM	LUMP SUM

	HP 14 x 73 STEEL PILES		PILE DRIVING EQUIPMENT SETUP FOR HP14x73 STEEL PILES	WATERPROOFING	METHOD B DAMPPROOFING	METAL RAIL (ALUMINUM)	METAL RAIL (STEEL) & FENCE	CONCRETE PARAPET	4" SLOPE PROTECTION	SELF-LUBRICATING EXPANSION BEARING ASSEMBLIES	STRUCTURE DRAINAGE SYSTEM AT STA. 28+12.88 -S2-	APPLICATION OF BRIDGE COATING	ASBESTOS ASSESSMENT
	NO.	L.F.	EACH	SQ. YARDS	SQ. YARDS	L.F.	L.F.	L.F.	SQ. YARDS	LUMP SUM	LUMP SUM	LUMP SUM	LUMP SUM
SUPERSTRUCTURE	——	——	———	270.7	———	———	116.3	231.4	———	LUMP SUM	LUMP SUM	LUMP SUM	———
ABUTMENT 1	40	2,133	40	64.2	203.0	20.5	5.6	———	175	———	LUMP SUM	LUMP SUM	———
PIER 1	26	1,083	26	26.9	37.0	———	———	———	———	———	———	LUMP SUM	———
PIER 2	20	733	20	53.0	90.1	———	———	———	———	———	———	LUMP SUM	———
ABUTMENT 2	30	1,200	30	71.3	227.2	16.5	8.3	———	258	———	LUMP SUM	LUMP SUM	———
TOTAL	116	5,149	116	486.1	557.3	37.0	130.2	231.4	433	LUMP SUM	LUMP SUM	LUMP SUM	LUMP SUM

NORTH CAROLINA PROFESSIONAL SEAL 44886 ENGINEER JOEL RYAN RAPP

DocuSigned by: Joel R. Rapp 5/2/2018

DOCUMENT NOT CONSIDERED FINAL UNLESS ALL SIGNATURES COMPLETED

PROJECT NO. P-5705BA
MECKLENBURG COUNTY
STATION: POS STA. 28+12.88 -S2-

SHEET 3 OF 4

STATE OF NORTH CAROLINA
DEPARTMENT OF TRANSPORTATION
RALEIGH

GENERAL DRAWING

LOCATION SKETCH
AND
TOTAL BILL OF MATERIAL

HNTB NORTH CAROLINA, P.C.
NC License No. C-1554
343 E. Six Forks Rd., Suite 200, Raleigh, N.C. 27609

DRAWN BY B. VAUGHN DATE 8/17
CHECKED BY R. RAPP DATE 9/17
DWG. NO. 3

REVISIONS						
NO.	BY	DATE	NO.	BY	DATE	
1	JRR	05022018	3			
2			4			

SHEET NO. S7-3
TOTAL SHEETS 51

DocuSign Envelope ID: EE73D197-1F1E-48B5-9045-71D960EE7F03

0012DEL_P28
1001ADD_P28

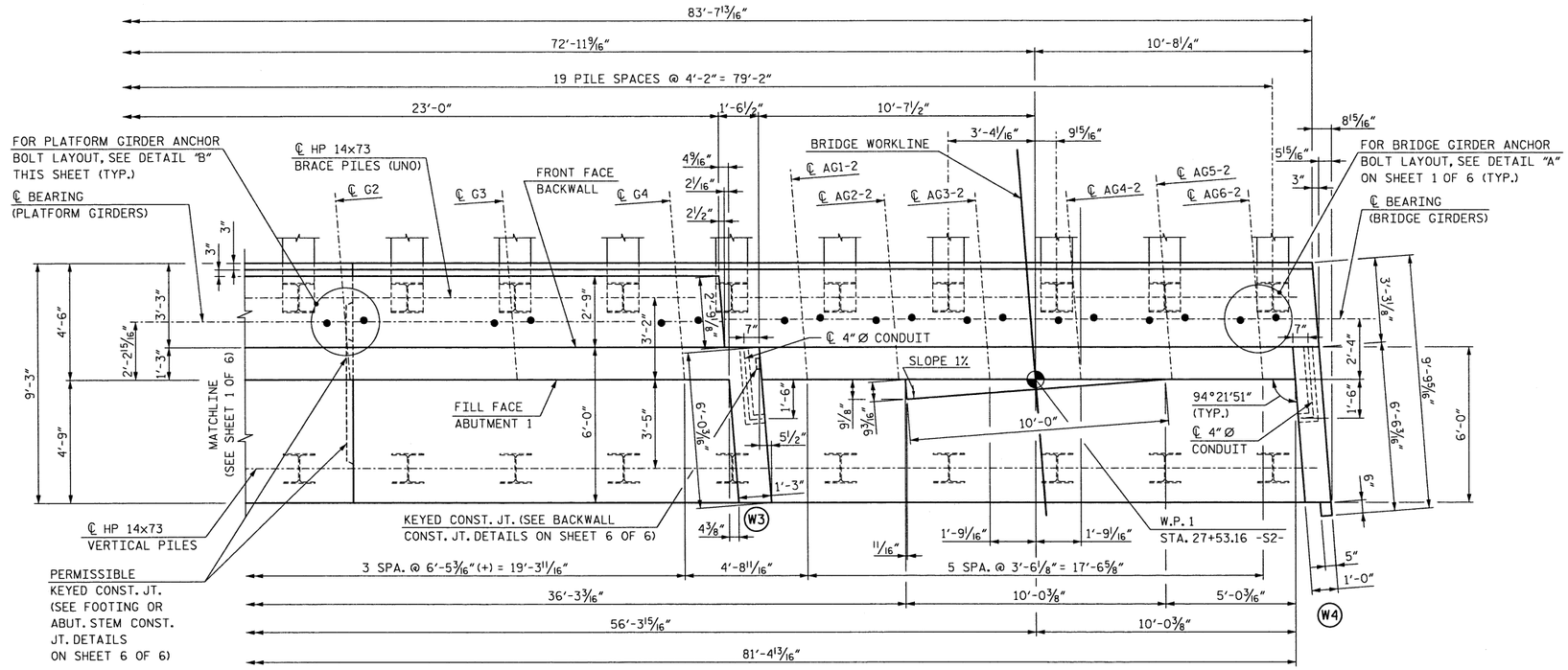

PLAN

NOTE:
FOR NOTES, SEE SHEET 1 OF 6.

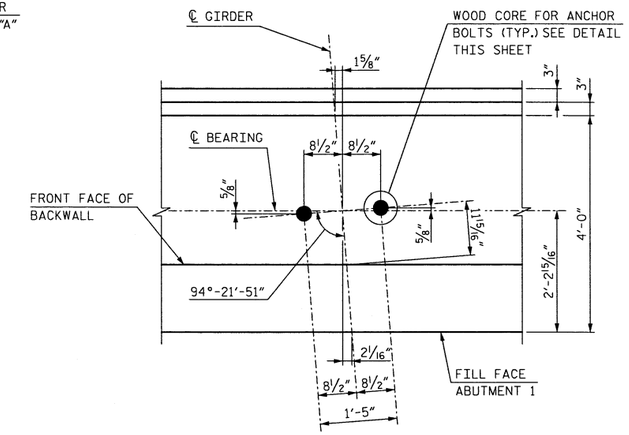

DETAIL B - PLATFORM GIRDER ANCHOR BOLT LAYOUT

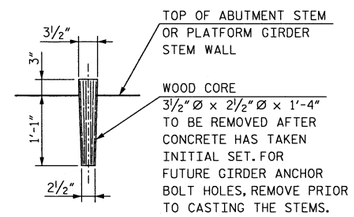

DETAIL OF WOOD CORE FOR ANCHOR BOLT HOLES

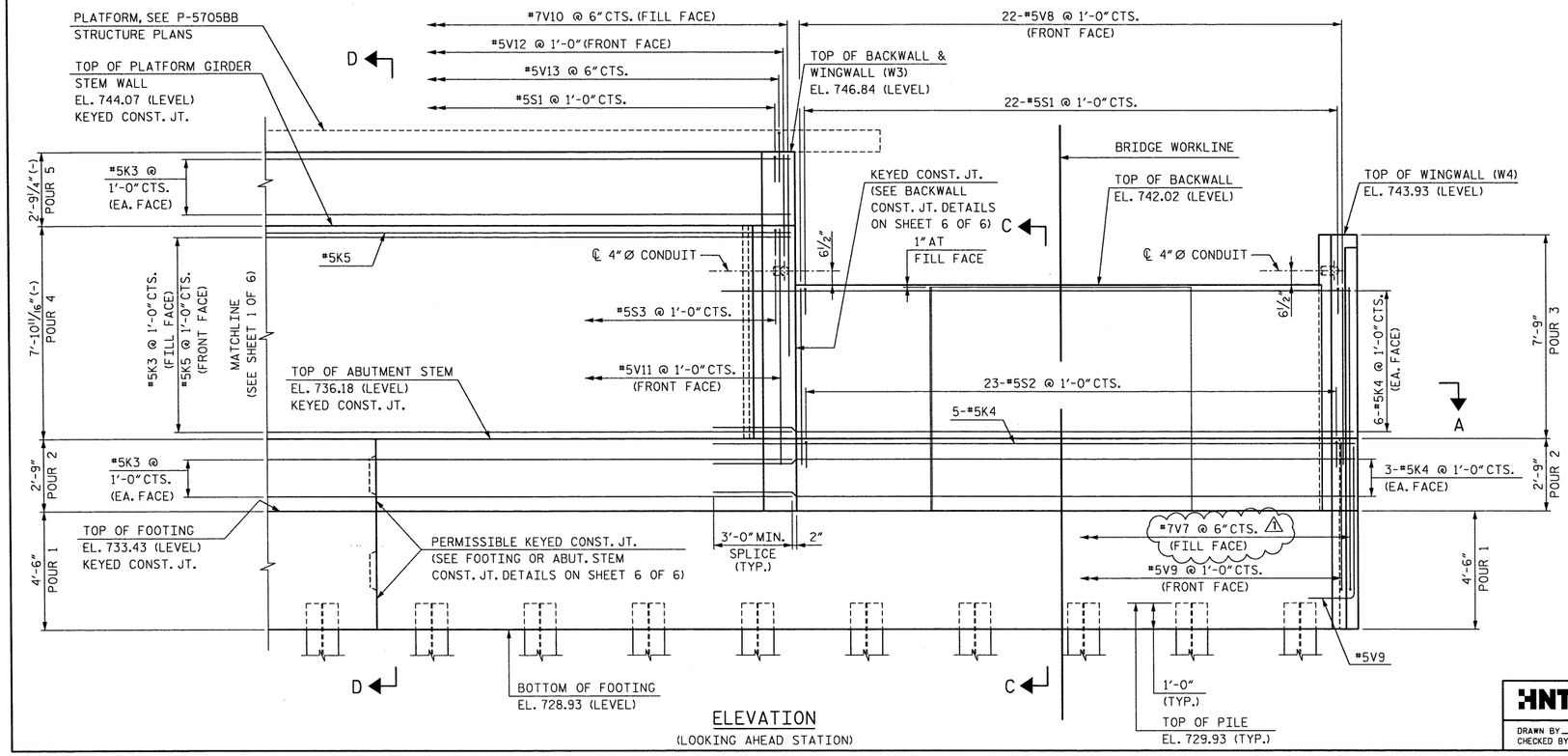

ELEVATION
(LOOKING AHEAD STATION)

PROJECT NO. P-5705BA
MECKLENBURG COUNTY
STATION: POS STA. 28+12.88 -S2-

SHEET 2 OF 6

STATE OF NORTH CAROLINA
DEPARTMENT OF TRANSPORTATION
RALEIGH

SUBSTRUCTURE

ABUTMENT 1

NORTH CAROLINA PROFESSIONAL SEAL 44886 ENGINEER JOEL RYAN RAPP
5/2/2018
DocuSigned by: 22DC72E8F9C4AF8...

DOCUMENT NOT CONSIDERED FINAL UNLESS ALL SIGNATURES COMPLETED

HNTB
HNTB NORTH CAROLINA, P.C.
NC License No. C-1554
343 E. Six Forks Rd., Suite 200, Raleigh, N.C. 27609

DRAWN BY J. JEFFERS DATE 10/17
CHECKED BY K. ERVIN DATE 10/17
DWG. NO. 24

REVISIONS						SHEET NO.
NO.	BY	DATE	NO.	BY	DATE	S7-24
1	JRR	05/02/2018	3			TOTAL SHEETS
2			4			51

DocuSign Envelope ID: 184F1549-7772-4CC9-8491-798BF4413197

0012DEL_P28
1001ADD_P28

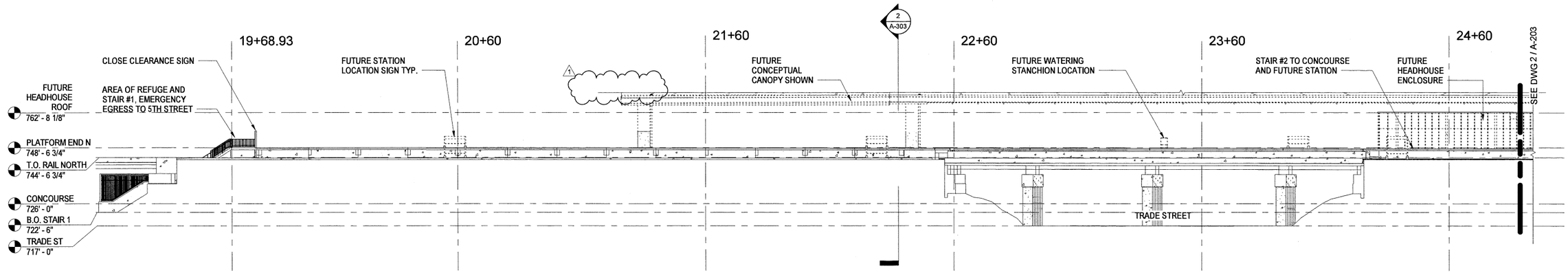

1 A-203 WEST ELEVATION 1
SCALE: 1" = 20'-0" 0 10' 20' 30' 40'

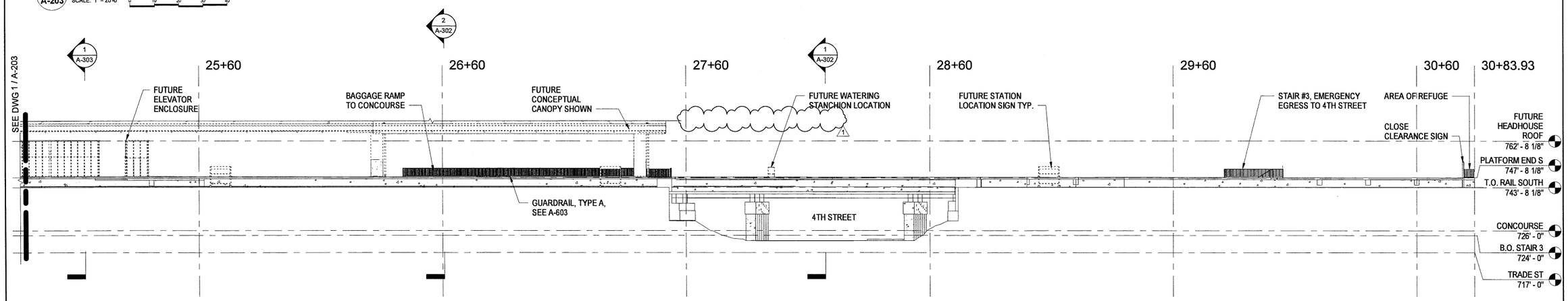

2 A-203 WEST ELEVATION 2
SCALE: 1" = 20'-0" 0 10' 20' 30' 40'

PROJECT NO. P-5705BB
MECKLENBURG COUNTY
STATION: 19+15.71 -S1-

HNTB CORPORATION REGISTERED ARCHITECTURAL CORPORATION 50896 NORTH CAROLINA CHARLOTTE, N.C.

5/2/2018

BLAIR WAGENBLAST REGISTERED ARCHITECT 13869 NORTH CAROLINA CHARLOTTE, N.C.

DocuSigned by: Blair Wagenblast 231E43BD1F1A483...

DOCUMENT NOT CONSIDERED FINAL UNLESS ALL SIGNATURES COMPLETED

STATE OF NORTH CAROLINA
DEPARTMENT OF TRANSPORTATION
RALEIGH

WEST ELEVATION

HNTB
HNTB NORTH CAROLINA, P.C.
NC License No. 50896
343 E. Six Forks Rd., Suite 200, Raleigh, N.C. 27609

DRAWN BY I OGHIENG DATE 3/27/18
CHECKED BY B WAGENBLAST DATE 3/27/18
DWG. NO. 19

REVISIONS						
NO.	BY	DATE	NO.	BY	DATE	
1	BW	5/2/18	3			
2			4			

SHEET NO. A-203
TOTAL SHEETS 35

DocuSign Envelope ID: 184F1549-7772-4CC9-8491-798BF4413197

0012DEL_P28
1001ADD_P28

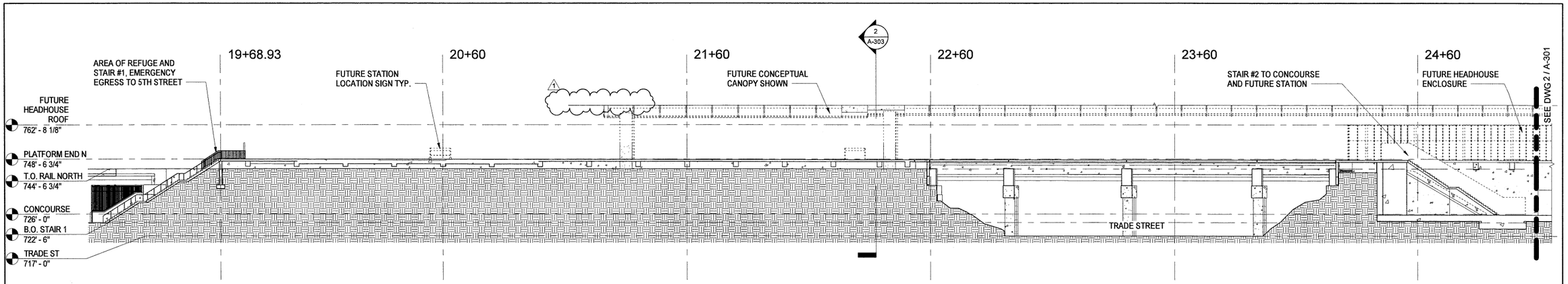

1 A-301 LONGITUDINAL SECTION 1
SCALE: 1" = 20'-0"

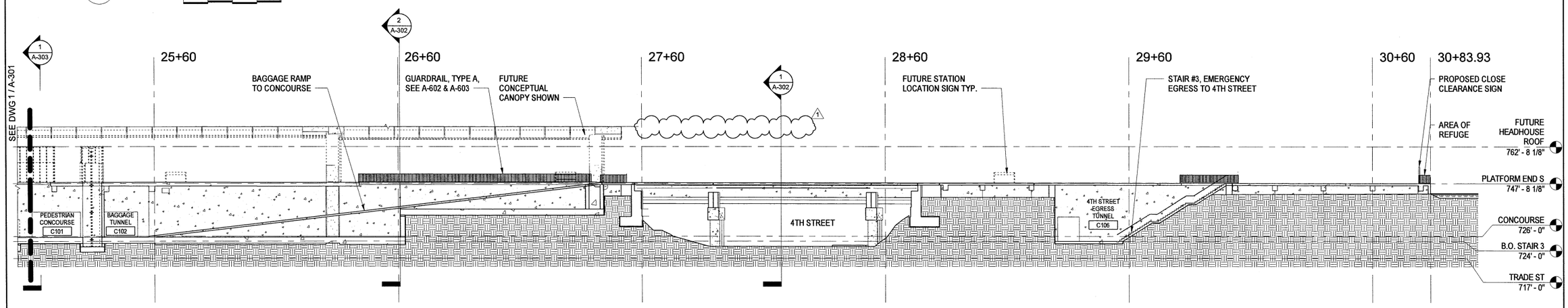

2 A-301 LONGITUDINAL SECTION 2
SCALE: 1" = 20'-0"

PROJECT NO. P-5705BB
MECKLENBURG COUNTY
STATION: 19+15.71 -S1-

HNTB CORPORATION REGISTERED ARCHITECTURAL CORPORATION 50896 NORTH CAROLINA CHARLOTTE, N.C.
5/2/2018
BLAIR WAGENBLAST REGISTERED ARCHITECT 13869 NORTH CAROLINA CHARLOTTE, N.C.
DocuSigned by: Blair Wagenblast 231E43B0101A403...

DOCUMENT NOT CONSIDERED FINAL UNLESS ALL SIGNATURES COMPLETED

STATE OF NORTH CAROLINA
DEPARTMENT OF TRANSPORTATION
RALEIGH

LONGITUDINAL SECTION

HNTB NORTH CAROLINA, P.C.
NC License No. 50896
343 E. Six Forks Rd., Suite 200, Raleigh, N.C. 27609

DRAWN BY I OCHIENG DATE 3/27/18
CHECKED BY B WAGENBLAST DATE 3/27/18
DWG. NO. 20

REVISIONS						
NO.	BY	DATE	NO.	BY	DATE	
1	BW	5/2/18	3			
2			4			

SHEET NO. A-301
TOTAL SHEETS 35

DocuSign Envelope ID: 184F1549-7772-4CC9-8491-798BF4413197

0012DEL_P28
1001ADD_P28

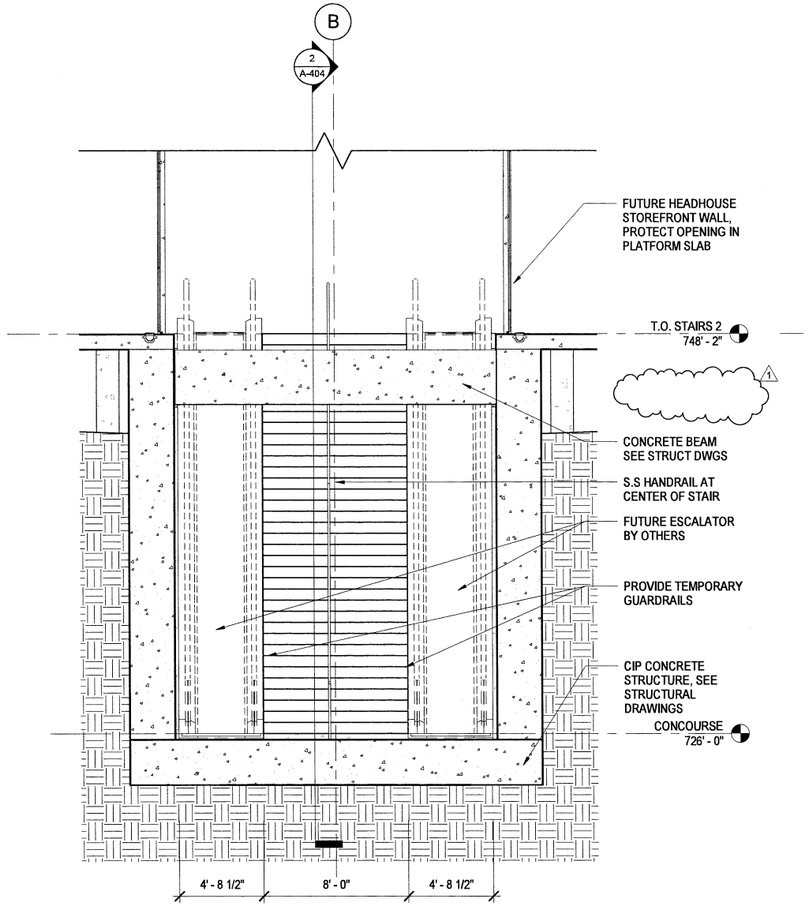

1 A-404 ELEVATION - STAIR #2 AT CONCOURSE
SCALE: 1/4" = 1'-0"

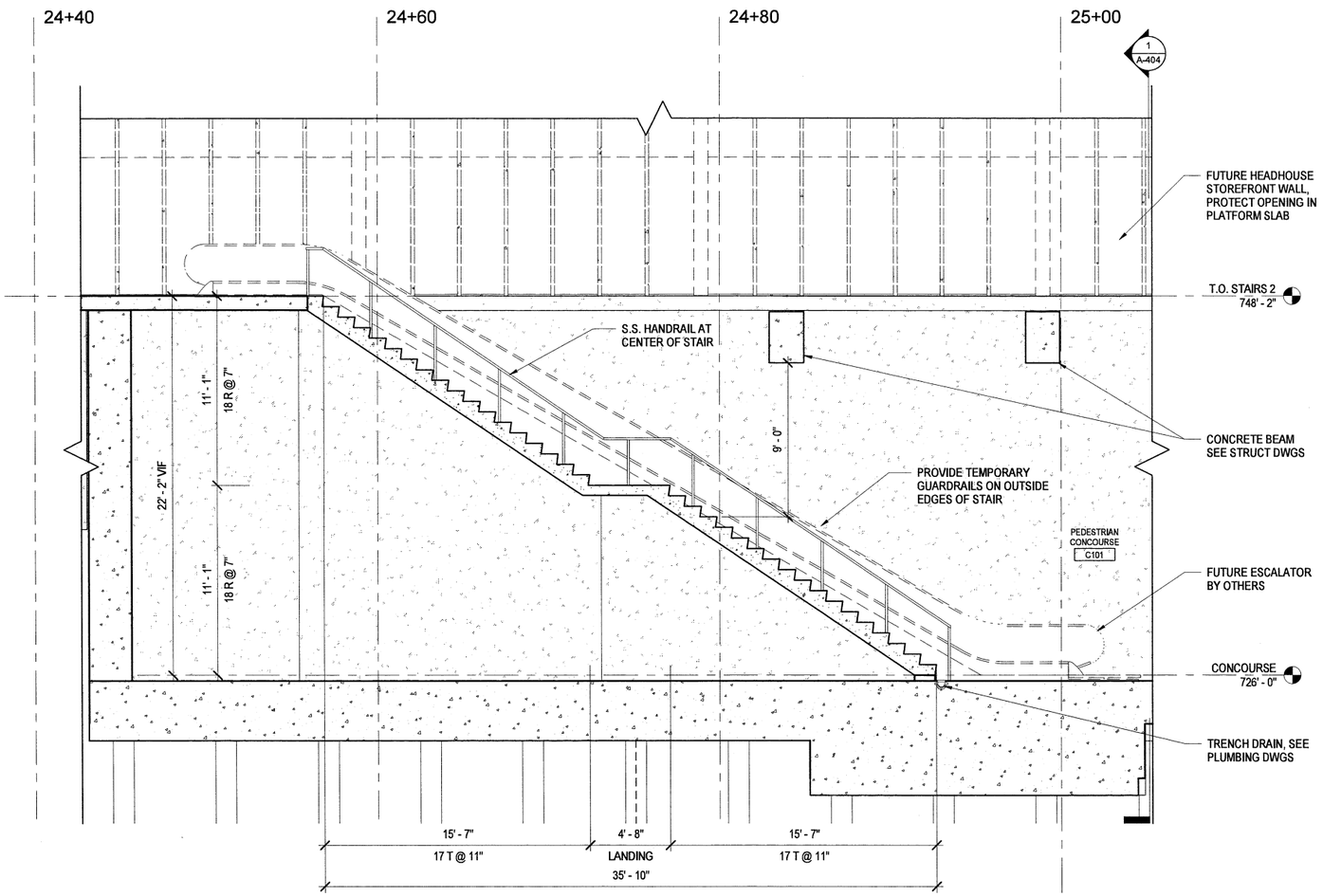

2 A-404 ENLARGED SECTION - STAIR #2 AT CONCOURSE
SCALE: 1/4" = 1'-0"

PROJECT NO. P-5705BB
MECKLENBURG COUNTY
STATION: 19+15.71 -S1-

NOTES:

1. REFER TO A-601 FOR TYPICAL RAILING DETAILS.

HNTB CORPORATION NORTH CAROLINA 50896 CHARLOTTE, N.C.
BLAIR WAGENBLAST REGISTERED ARCHITECT 13869 NORTH CAROLINA CHARLOTTE, N.C.
5/2/2018
DocuSigned by: Blair Wagenblast 231E438D1E4403...

DOCUMENT NOT CONSIDERED FINAL UNLESS ALL SIGNATURES COMPLETED

HNTB NORTH CAROLINA, P.C.
NC License No. 50896
343 E. Six Forks Rd., Suite 200, Raleigh, N.C. 27609

DRAWN BY I OCHIENG DATE 3/27/18
CHECKED BY B WAGENBLAST DATE 3/27/18
DWG. NO. 26

STATE OF NORTH CAROLINA
DEPARTMENT OF TRANSPORTATION
RALEIGH

STAIR #2 AT CONCOURSE SECTIONS

REVISIONS						
NO.	BY	DATE	NO.	BY	DATE	
1	BW	5/2/18	3			
2			4			

SHEET NO. A-404
TOTAL SHEETS 35

DocuSign Envelope ID: 46BB3D7E-0EE8-4D05-ABC2-ABB1CF8BC691

0012DEL_P28
1001ADD_P28

GENERAL STRUCTURAL NOTES

THE FOLLOWING GENERAL STRUCTURAL NOTES ARE APPLICABLE TO THE STRUCTURAL DRAWINGS ONLY. THESE NOTES ARE PROVIDED FOR CONVENIENCE AND ARE SUPPLEMENTAL TO THE SPECIFICATIONS.

1.0 GENERAL

1.1 TYPICAL SECTIONS AND DETAILS - ALL SECTIONS, DETAILS AND NOTES ARE INTENDED TO BE TYPICAL UNLESS OTHERWISE DETAILED. WORKING AND SHOP DRAWINGS SUBMITTED BY THE GENERAL CONTRACTOR SHALL SHOW APPLICATION OF TYPICAL SECTIONS AND DETAILS FOR SIMILAR SITUATIONS.

2.0 STRUCTURAL DESIGN CRITERIA

2.1 PROPOSED STRUCTURES AND FOUNDATIONS ARE DESIGNED IN CONFORMANCE WITH THE FOLLOWING CODES AND STANDARDS:

A. NORTH CAROLINA DEPARTMENT OF TRANSPORTATION (NCDOT) STRUCTURE UNIT DESIGN MANUAL, 2016 EDITION.
B. NORTH CAROLINA STATE BUILDING CODE, 2012 (2009 INTERNATIONAL BUILDING CODE WITH NORTH CAROLINA AMENDMENTS).
C. ALL MATERIALS AND WORKMANSHIP SHALL BE IN ACCORDANCE WITH "STANDARD SPECIFICATIONS FOR ROADS AND STRUCTURES", JANUARY 2018, NORTH CAROLINA DEPARTMENT OF TRANSPORTATION, HEREIN CALLED STANDARD SPECIFICATIONS, UNLESS NOTED OTHERWISE.
D. AMTRAK ENGINEERING PRACTICES:
   1. STATIONS STANDARD DESIGN PRACTICES (SDP), EP4000, MARCH 6, 2014.
   2. MAINTENANCE AND PROTECTION OF RAILROAD TRAFFIC DURING CONTRACTOR OPERATIONS, EP 3014.
   3. STANDARD TRACK PLAN MINIMUM ROADWAY CLEARANCES, AM70050G.
   3. OTHER AMTRAK STANDARDS, AS APPLICABLE.
E. NORFOLK SOUTHERN RAILROAD (NSR):
   1. NSR PUBLIC PROJECTS MANUAL, 2015.
   2. NSR SPECIAL PROVISIONS, 2017.

THESE SECONDARY STANDARDS SHALL BE REFERENCED BY OR USED IN THE ABSENCE OF GUIDANCE FROM THE REFERENCES ABOVE:

F. AMERICAN RAILWAY ENGINEERING AND MAINTENANCE-OF-WAY ASSOCIATION (AREMA), MANUAL FOR RAILWAY ENGINEERING, 2017 EDITION.
G. ACI BUILDING CODE REQUIREMENTS FOR STRUCTURAL CONCRETE, ACI 318-14. 1
H. AISC, STEEL CONSTRUCTION MANUAL, 13TH EDITION, INCLUDING THE SPECIFICATION FOR STRUCTURAL STEEL BUILDINGS WITH COMMENTARY.
I. AISC CODE OF STANDARD PRACTICE FOR STEEL BUILDINGS AND BRIDGES, AISC 303-05.
J. AMERICAN SOCIETY OF CIVIL ENGINEERS (ASCE), MINIMUM DESIGN LOADS FOR BUILDINGS AND OTHER STRUCTURES, ASCE 7-05.
K. ASCE, DESIGN LOADS ON STRUCTURES DURING CONSTRUCTION, ASCE 37-14.
L. AWS, STRUCTURAL WELDING CODES - D1.1, 2008 EDITION, D1.4, 2005 EDITION, D1.5, 2008 EDITION.
M. STEEL DECK INSTITUTE, DESIGN MANUAL FOR COMPOSITE DECKS, FORM DECKS AND ROOF DECKS (PUBLICATION NO. 30).
N. APPLICABLE STATUTES AND REGULATIONS OF FEDERAL, STATE AND LOCAL JURISDICTIONS.

3.0 GENERAL SERVICE LOADS

3.1 PLATFORM LIVE LOAD = 150 PSF

3.2 WALKWAY, RAMP, STAIR AND LANDING LIVE LOAD = 100 PSF OR 300 LBS CONCENTRATED LOAD

3.3 CONCOURSE FLOOR LIVE LOAD = 150 PSF

3.4 ROOF LIVE LOAD = 30 PSF

3.5 LIVE LOAD SURCHARGE: COOPER E80 LIVE LOAD

3.6 ROOF SNOW LOAD:
A. GROUND SNOW LOAD, Pg = 10 PSF
B. FLAT-ROOF SNOW LOAD, Pf = 10 PSF PLUS DRIFT
C. SNOW EXPOSURE FACTOR, Ce = 0.9
D. SNOW IMPORTANCE FACTOR = 1.1
E. THERMAL FACTOR, Ct = 1.2

3.7 WIND DESIGN DATA:
A. BASIC WIND SPEED = 90 MPH
B. WIND IMPORTANCE FACTOR, I = 1.15
C. EXPOSURE CATEGORY = B
D. OCCUPANCY CATEGORY = III
E. AMTRAK STANDARD DESIGN PRACTICE WIND LOAD:
   1. MAIN WIND FORCE RESISTING SYSTEM:
      A. WALLS: MINIMUM 20 PSF FOR WINDWARD WALLS, 10 PSF FOR LEEWARD WALLS
      B. ROOF: MINIMUM 30 PSF FOR CORNER AND OVERHANGS, 25 PSF FOR EAVE AREAS, 15 PSF FOR INTERIOR AREAS
   2. BUILDING COMPONENTS AND CLADDING SYSTEM:
      A. WALLS: MINIMUM 30 PSF FOR INTERNAL ZONE, 35 PSF FOR EDGE ZONES, 40 PSF FOR CORNER ZONES
      B. ROOF PANELS: MINIMUM 35 PSF FOR INTERNAL ZONE, 45 PSF FOR EDGE ZONES AND OVERHANGS, 60 PSF FOR CORNER ZONES

3.8 EARTHQUAKE DESIGN DATA:
A. SEISMIC IMPORTANCE FACTOR, I = 1.25
B. OCCUPANCY CATEGORY = III
C. SHORT TERM ACCELERATION COEFFICIENT, Ss = 0.239g
D. 1-SECOND ACCELERATION COEFFICIENT, S1 = 0.103g
E. SITE CLASS = C
F. SPECTRAL RESPONSE COEFFICIENT AT SHORT PERIOD, SDS = 0.191
G. SPECTRAL RESPONSE COEFFICIENT AT 1-SECOND PERIOD, SD1 = 0.116
H. SEISMIC DESIGN CATEGORY = B
I. BASIC SEISMIC-FORCE RESISTING SYSTEM = ORDINARY REINFORCED CONCRETE MOMENT FRAMES
J. SEISMIC RESPONSE COEFFICIENT, Cs = 0.080
K. RESPONSE MODIFICATION FACTOR, R = 3.0
L. ANALYSIS PROCEDURE = EQUIVALENT LATERAL FORCE PROCEDURE

4.0 CONSTRUCTION OPERATIONS

4.1 CONTROL OF WORK: ALL WORK INVOLVED IN THE CONSTRUCTION OF THE RAILWAY STRUCTURE SHALL BE PERFORMED SATISFACTORY TO THE ENGINEER AND COMPLIANT WITH THE DESIGN STANDARDS OF NORFOLK SOUTHERN RAILWAY COMPANY. ALL METHODS OF HANDLING THE WORK AFFECTING THE SAFETY OF RAIL OPERATIONS MUST BE APPROVED BY THE RAILWAY COMPANY, AS A SUBMITTAL THROUGH THE ENGINEER, AT LEAST TWO WEEKS BEFORE PROCEEDING WITH THAT PORTION OF THE WORK. RAIL TRAFFIC SHALL, AT ALL TIMES, BE MAINTAINED AND PROTECTED. THE CONTRACTOR SHALL NOT AT ANY TIME DELAY OR INTERFERE WITH RAIL OPERATIONS.

4.2 ASSUME AN ABSOLUTE OBLIGATION TO PROTECT EXISTING STRUCTURES AND EQUIPMENT, NEW WORK, AMTRAK, NORFOLK SOUTHERN, OTHER RAILROAD OPERATING AGENCIES, AND THE GENERAL PUBLIC FROM DAMAGE, LOSS OR INJURY RESULTING FROM THE GENERAL CONTRACTOR'S OPERATIONS. IN THE EVENT OF SUCH DAMAGE OR LOSS, PROMPTLY REPLACE OR RESTORE THE WORK TO AN EQUIVALENT QUALITY TO THE SATISFACTION OF THE PROJECT MANAGER AND AT NO ADDITIONAL EXPENSE TO NCDOT.

4.3 REMOVE TO THE EXTENT INDICATED AND PROPERLY DISPOSE OF EXISTING STRUCTURES AND MATERIALS TO BE DEMOLISHED IN ACCORDANCE WITH THE SPECIFICATIONS.4.1 ASSUME AN ABSOLUTE OBLIGATION TO PROTECT EXISTING STRUCTURES AND EQUIPMENT, NEW WORK, AMTRAK, NORFOLK SOUTHERN, OTHER RAILROAD OPERATING AGENCIES, AND THE GENERAL PUBLIC FROM DAMAGE, LOSS OR INJURY RESULTING FROM THE GENERAL CONTRACTOR'S OPERATIONS. IN THE EVENT OF SUCH DAMAGE OR LOSS, PROMPTLY REPLACE OR RESTORE THE WORK TO AN EQUIVALENT QUALITY TO THE SATISFACTION OF THE PROJECT MANAGER AND AT NO ADDITIONAL EXPENSE TO NCDOT.

4.4 REMOVE TO THE EXTENT INDICATED AND PROPERLY DISPOSE OF EXISTING STRUCTURES AND MATERIALS TO BE DEMOLISHED IN ACCORDANCE WITH THE SPECIFICATIONS.4.3 NCDOT DOES NOT GUARANTEE THE ACCURACY OF THE LOCATIONS OF THE EXISTING ABOVE GROUND AND SUBSURFACE UTILITY STRUCTURES SHOWN ON THE DRAWINGS, NOR DOES NCDOT GUARANTEE THAT ALL ABOVE AND UNDERGROUND STRUCTURES ARE SHOWN.

4.5 EXISTING UTILITIES ARE SHOWN IN ACCORDANCE WITH THE BEST INFORMATION AVAILABLE AND ARE FOR THE CONVENIENCE OF THE CONTRACTOR ONLY. THE CONTACTOR SHALL FIELD VERIFY THE INFORMATION AND SHALL TAKE ALL PRECAUTIONS TO FULLY PROTECT THE UTILITIES AND SERVICE.

4.6 CONTRACTOR SHALL CONTACT THE NORTH CAROLINA UTILITIES PRIOR TO STARTING EXCAVATION.

4.7 THE CONTRACTOR SHALL SUBMIT TO NCDOT, FOR APPROVAL, A SITE SPECIFIC WORK PLAN (SSWP) IN ACCORDANCE WITH NORFOLK SOUTHERN REQUIREMENTS.

4.8 THE CONTRACTOR SHALL PROVIDE TEMPORARY BRACING, SHORING AND SHIELDING AS REQUIRED DURING CONSTRUCTION, TO PROTECT THE RAILROAD AND EXISTING STRUCTURES TO REMAIN FROM DISPLACEMENT AND SETTLEMENT DUE TO EXCAVATION AND EARTH AUGERING OPERATIONS. THIS IS INCIDENTAL TO THE FOUNDATION EXCAVATION PAY ITEM.

A. DESIGN OF TEMPORARY BRACING, SHORING AND SHIELDING SHALL BE IN ACCORDANCE WITH THE SPECIFICATIONS AND SHALL REQUIRE APPROVAL OF THE NCDOT PROJECT MANAGER. DESIGN SHALL BE PERFORMED, SIGNED AND SEALED BY A QUALIFIED LICENSED PROFESSIONAL ENGINEER CURRENTLY REGISTERED IN THE STATE OF NORTH CAROLINA IN ACCORDANCE WITH THE SPECIFICATIONS.
B. TEMPORARY BRACING, SHORING AND SHIELDING SHALL BE REMOVED UPON COMPLETION OF WORK AS BACKFILL IS PLACED. STEEL SHEETING MAY BE LEFT IN PLACE IF APPROVED BY THE NCDOT PROJECT MANAGER. HOWEVER, ALL BRACING SHALL BE REMOVED AND THE SHEETING SHALL BE CUT OFF TO THE ELEVATIONS DIRECTED BY THE NCDOT PROJECT MANAGER.
C. THE CONTRACTOR SHALL PROVIDE ADEQUATE SHORING OR BRACING DURING CONSTRUCTION TO RESIST FORCES INCLUDING, BUT NOT LIMITED TO WIND AND UNBALANCED LOADING DUE TO CONSTRUCTION.

4.9 CONTRACTOR SHALL PERFORM CONSTRUCTION OPERATIONS ONLY IF PERMITTED BY NORFOLK SOUTHERN.

4.10 OUTAGES AND SITE ACCESS SHALL BE COORDINATED WITH NORFOLK SOUTHERN.

4.11 THE CONTRACTOR SHALL COORDINATE WITH NCDOT TO LOCATE, PROTECT, SUPPORT AND RESTORE BURIED UTILITY, SIGNAL AND COMMUNICATIONS CABLES.

4.12 THE CONTRACTOR SHALL VISIT THE SITE PRIOR TO BIDDING AND ASCERTAIN THE EXISTING SITE CONDITIONS, ACCESS TO THE SITE, STORAGE, AND CLEARANCES AVAILABLE FOR CONSTRUCTION.

4.13 ALL DISCARDED, DEMOLISHED OR EXCAVATED MATERIAL NOT OTHERWISE DESIGNATED FOR SALVAGE SHALL BECOME THE PROPERTY OF THE CONTRACTOR WITH NCDOT PERMISSION AND SHALL BE PROPERLY DISPOSED OF OFF SITE IN ACCORDANCE WITH ALL APPLICABLE RULES AND REGULATIONS. EXISTING MATERIAL DESIGNATED FOR SALVAGE SHALL REMAIN THE PROPERTY OF NCDOT AND SHALL BE CAREFULLY REMOVED AND PLACED IN STORAGE AREAS DESIGNATED BY NCDOT.

4.14 PROVIDE DOWELS, ANCHOR BOLTS, EMBEDMENTS AND SIMILAR ITEMS AS REQUIRED AND/OR LOCATED ON THE DRAWINGS.

4.15 THE CONTRACTOR SHALL MEET AMTRAK'S AND/OR NORFOLK SOUTHERN'S REQUIREMENTS FOR WORK ON RAILROAD PROPERTY.

4.16 NO BACKFILLING OF EXTERIOR WALLS SHALL BE PERMITTED UNTIL THE TOP SLAB HAS BEEN PLACED AND CURED. THE CONTRACTOR SHALL BE RESPONSIBLE FOR TEMPORARILY BRACING WALLS UNTIL THE TOP SLAB IS PLACED.

4.17 FOR CRANE SAFETY, SEE SPECIAL PROVISIONS.

4.18 FOR SUBMITTAL OF WORKING DRAWINGS, SEE SPECIAL PROVISION.

4.19 FOR FALSEWORK AND FORMWORK, SEE SPECIAL PROVISIONS.

4.20 FOR GROUT FOR STRUCTURES, SEE SPECIAL PROVISIONS.

4.21 FOUNDATION WATERPROOFING SHALL BE INSTALLED ALONG THE VERTICALS OF THE UNDERGROUND STRUCTURES AND UNDER THE BASE SLABS IN ACCORDANCE WITH THE SPECIAL PROVISIONS.

5.0 FOUNDATIONS

5.1 PRIOR TO CONSTRUCTION OF NEW EQUIPMENT OR FOUNDATION STRUCTURE, COMPACT THE SUBGRADE TO A DENSITY EQUIVALENT TO NOT LESS THAN THE SPECIFIED PERCENTAGE OF MAXIMUM DENSITY PER ASTM D1557 AS DESCRIBED IN THE SPECIFICATIONS.

5.2 MINIMUM ALLOWABLE BEARING CAPACITY:
A. SLABS-ON-GRADE SHALL BE SUPPORTED ON PROPERLY COMPACTED OR SUBBASE MATERIAL WHICH SHALL DEVELOP A MINIMUM ALLOWABLE BEARING CAPACITY OF 3,000 PSF.
B. SPREAD OR STRIP FOOTINGS SHALL BEAR ON PROPERLY PREPARED SUBGRADE OF UNDISTURBED RESIDUAL SOILS OR COMPACTED STRUCTURAL BACKFILL WITH A MINIMUM ALLOWABLE BEARING CAPACITY OF 3,000 PSF.
C. COMPACTION AND ALLOWABLE BEARING CAPACITY SHALL BE FIELD VERIFIED BY TESTING LABORATORY. ALL LABORATORY WORK SHALL BE CERTIFIED BY A PROFESSIONAL ENGINEER CURRENTLY REGISTERED IN NORTH CAROLINA WHO IS QUALIFIED IN SOILS ENGINEERING. ALL TESTING AND CERTIFICATION SHALL BE PERFORMED AT THE CONTRACTOR'S EXPENSE.

5.3 EXCAVATIONS SHALL BE KEPT DRY UNTIL SUBSURFACE CONSTRUCTION IS COMPLETE. IF GROUNDWATER OR OTHER LIQUIDS ARE ENCOUNTERED DURING THE COURSE OF THE WORK, THE CONTRACTOR SHALL PROVIDE SUITABLE MEANS OF DEWATERING THE EXCAVATIONS.

5.4 PERIMETER FOUNDATION UNDERDRAINS AND ALL INCIDENTAL ITEMS SHALL BE INCLUDED IN THE BID PRICE FOR FOUNDATION EXCAVATION.

5.5 SEPARATION GEOTEXTILE SHALL BE TYPE 1 GEOTEXTILE IN ACCORDANCE WITH SECTION 1056 OF THE STANDARD SPECIFICATIONS.

5.6 REFER TO FOUNDATION NOTES ON SHEET S-110 & S-113.

TOTAL BILL OF MATERIALS

	REINFORCED CONCRETE DECK SLAB	CLASS AA CONCRETE	REINFORCING STEEL	APPROX. 160,000 LBS. - STRUCTURAL STEEL	PAINTING OF STRUCTURAL STEEL	FOUNDATION EXCAVATION	FOUNDATION WATERPROOFING	HP 14x73 STEEL PILES		PILE DRIVING EQUIPMENT SETUP FOR HP14x73 STE...	PDA TESTING	ELASTOMERIC BEARINGS	LIQUID FLOOR TREATMENTS
	SQ. FEET	CU. YARDS	LBS	LUMP SUM	LUMP SUM	CU. YARDS	SQ. YARDS	NO.	LF	EACH	EACH	LUMP SUM	SQ. FEET
PLATFORM, CONCOURSE, 4TH ST. EGRESS STAIR	-	4,400	1,076,236	LUMP SUM	-	1,600	2,400	235	10,620	235 1	1	-	28,700
TRADE ST. PLATFORM BRIDGE	5,700	-	-	LUMP SUM	LUMP SUM	-	-	-	-	-	-	LUMP SUM	5,700
4TH ST. PLATFORM BRIDGE	4,000	-	-	LUMP SUM	LUMP SUM	-	-	-	-	-	-	LUMP SUM	4,000
TOTAL	9,700	4,400	1,076,236	LUMP SUM	LUMP SUM	1,600	2,400	235	10,620	235 1	1	LUMP SUM	38,400

TOTAL BILL OF MATERIALS NOTES:

1. THE PLATFORM SLABS FOR THE TRADE STREET AND 4TH STREET PLATFORM BRIDGES ARE INCLUDED IN THE REINFORCED CONCRETE DECK SLAB PAY ITEM.
2. THE PLATFORM SLABS FOR THE PLATFORM, CONCOURSE, AND 4TH EGRESS STAIR STRUCTURES ARE INCLUDED IN THE CLASS AA CONCRETE PAY ITEM.
3. ALL PLUMBING (TRENCH DRAINS, PIPING, SUPPORTS, ETC.) ASSOCIATED WITH THE PLATFORM, CONCOURSE, AND 4TH STREET EGRESS STAIRS ARE INCLUDED IN THE PLATFORM STRUCTURE DRAINAGE SYSTEM PAY ITEM. SEE PLUMBING PLANS.

PROJECT NO. P-5705BB
MECKLENBURG COUNTY
PROJECT NO. 19+68.93 -S1-

SHEET 1 OF 2

NORTH CAROLINA PROFESSIONAL SEAL 045044 ENGINEER CHRISTOPHER PARK
5/2/2018
DocuSigned by: Christopher Park D380CEEB3E5048D...

DOCUMENT NOT CONSIDERED FINAL UNLESS ALL SIGNATURES COMPLETED

STATE OF NORTH CAROLINA
DEPARTMENT OF TRANSPORTATION
RALEIGH

STRUCTURAL GENERAL NOTES

HNTB NORTH CAROLINA, P.C.
NC License No. C-1554
343 E. Six Forks Rd., Suite 200, Raleigh, N.C. 27609

DRAWN BY D TRACZYKIEWICZ DATE 3/27/2018
CHECKED BY C PARK DATE 3/27/2018
DWG. NO. 2

REVISIONS						
NO.	BY	DATE	NO.	BY	DATE	
1	CP	5/2/18	3			
2			4			

SHEET NO. S-002
TOTAL SHEETS 98

DocuSign Envelope ID: 46BB3D7E-0EE8-4D05-ABC2-ABB1CF8BC691

0012DEL_P28
1001ADD_P28

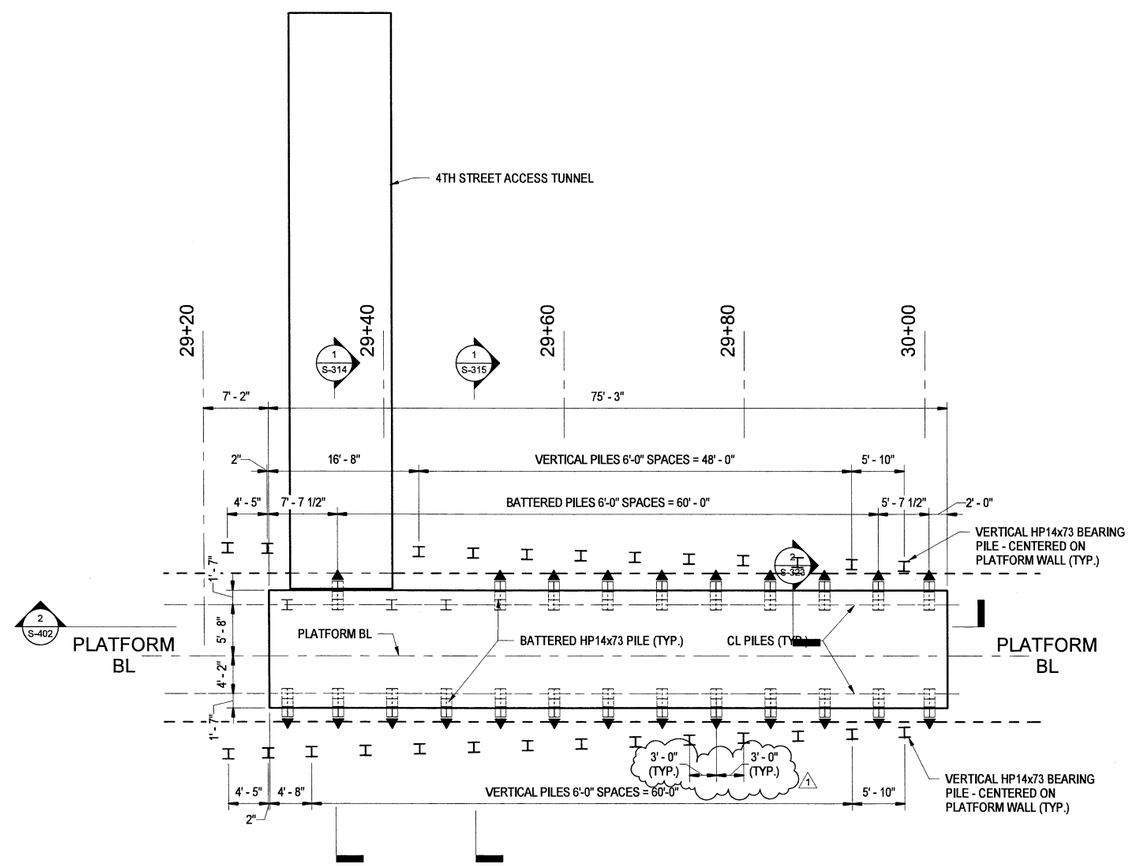

1 S-113 ENLARGED 4TH ST PILE FOUNDATION PLAN
SCALE: 1/8" = 1'-0"

PROJECT NO. P-5705BB
MECKLENBURG COUNTY
PROJECT NO. 19+68.93 -S1-

FOUNDATION NOTES:

1. FOR PILES, SEE GEOTECHNICAL SPECIAL PROVISIONS.
2. PILES AT CONCOURSE, BAGGAGE RAMP, AND 4TH STREET EGRESS STAIR STRUCTURE ARE DESIGNED FOR AN ALLOWABLE BEARING CAPACITY OF 100 TONS PER PILE.
3. DRIVE PILES TO A REQUIRED BEARING CAPACITY OF 250 TONS PER PILE. THIS REQUIRED DRIVING RESISTANCE INCLUDES ADDITIONAL RESISTANCE FOR DOWNDRAG.
4. TEST THE FIRST PRODUCTION WITH THE PDA DURING DRIVING, RESTRIKING OR REDRIVING IS REQUIRED. FOR PDA TESTING, SEE GEOTECHNICAL SPECIAL PROVISION.
5. PILE BATTERED IN DIRECTION SHOWN AT 4:12 BATTER.

NORTH CAROLINA PROFESSIONAL SEAL 045044 ENGINEER CHRISTOPHER PARK
DocuSigned by: Christopher Park
5/2/2018

DOCUMENT NOT CONSIDERED FINAL UNLESS ALL SIGNATURES COMPLETED

HNTB NORTH CAROLINA, P.C.
NC License No. C-1554
343 E. Six Forks Rd., Suite 200, Raleigh, N.C. 27609

DRAWN BY D TRACZYKIEWICZ DATE 3/27/2018
CHECKED BY C PARK DATE 3/27/2018
DWG. NO. 10

STATE OF NORTH CAROLINA
DEPARTMENT OF TRANSPORTATION
RALEIGH

4TH STREET FOUNDATION PLAN

REVISIONS						SHEET NO.
NO.	BY	DATE	NO.	BY	DATE	S-113
1	CP	5/2/18	3			TOTAL SHEETS
2			4			98

DocuSign Envelope ID: BF749189-FFAF-4251-8601-6EB898AB2561

0012DEL_P28
1001ADD_P28

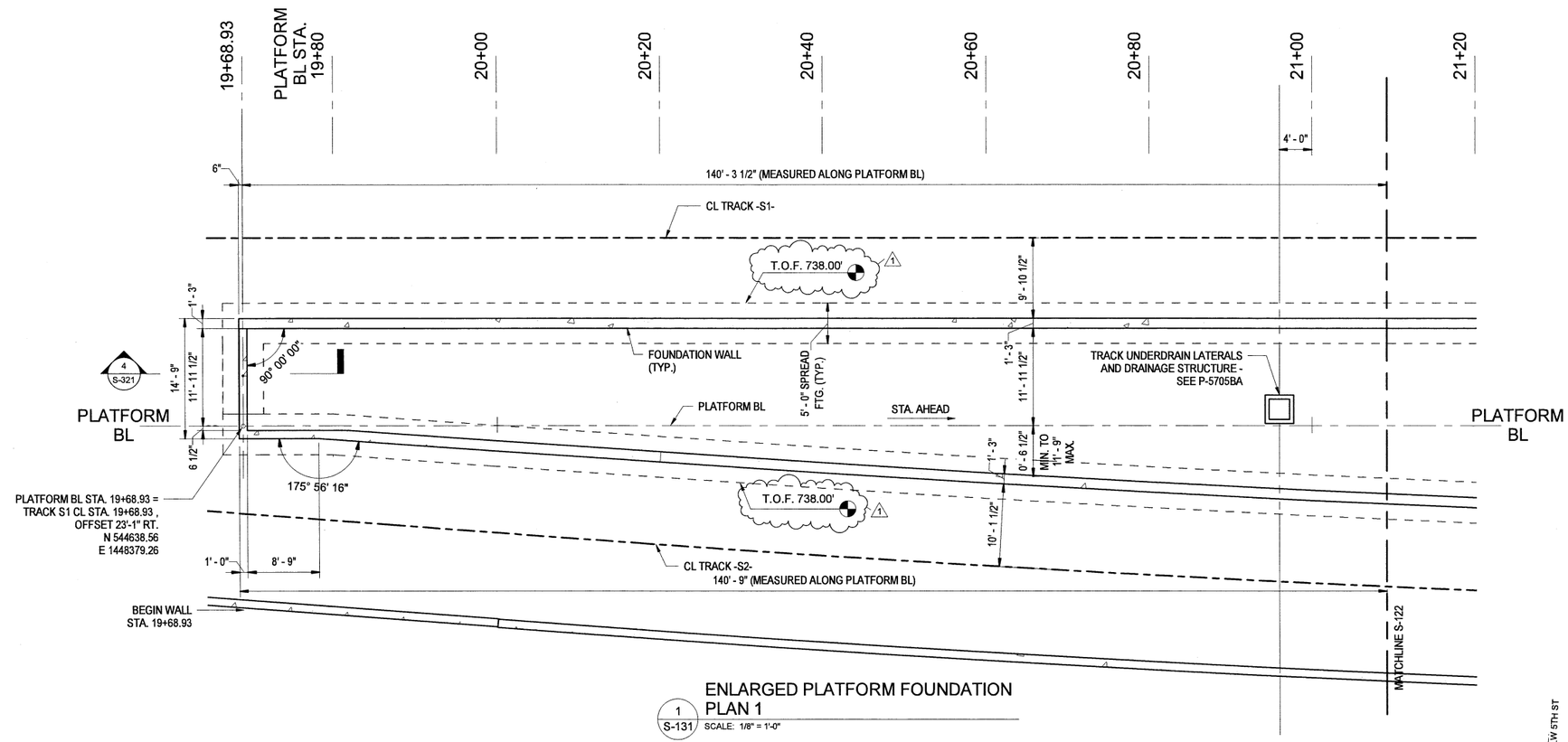

1 S-131 ENLARGED PLATFORM FOUNDATION PLAN 1
SCALE: 1/8" = 1'-0"

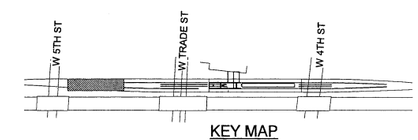

KEY MAP
SCALE: NTS

PROJECT NO. P-5705BB
MECKLENBURG COUNTY
PROJECT NO. 19+68.93 -S1-

SHEET 1 OF 7

NORTH CAROLINA PROFESSIONAL SEAL 045044 ENGINEER CHRISTOPHER PARK
5/3/2018
DocuSigned by: Christopher Park
C38GCREESE5046D...

DOCUMENT NOT CONSIDERED FINAL UNLESS ALL SIGNATURES COMPLETED

STATE OF NORTH CAROLINA
DEPARTMENT OF TRANSPORTATION
RALEIGH

ENLARGED PLATFORM FOUNDATION PLAN

HNTB
HNTB NORTH CAROLINA, P.C.
NC License No. C-1554
343 E. Six Forks Rd., Suite 200, Raleigh, N.C. 27609

DRAWN BY D TRACZYKIEWICZ DATE 3/27/2018
CHECKED BY C PARK DATE 3/27/2018
DWG. NO. 15

REVISIONS					
NO.	BY	DATE	NO.	BY	DATE
1	CP	5/2/18	3		
2			4		

SHEET NO. S-131
TOTAL SHEETS 98

DocuSign Envelope ID: BF749189-FFAF-4251-8601-6EB898AB2561

0012DEL_P28
1001ADD_P28

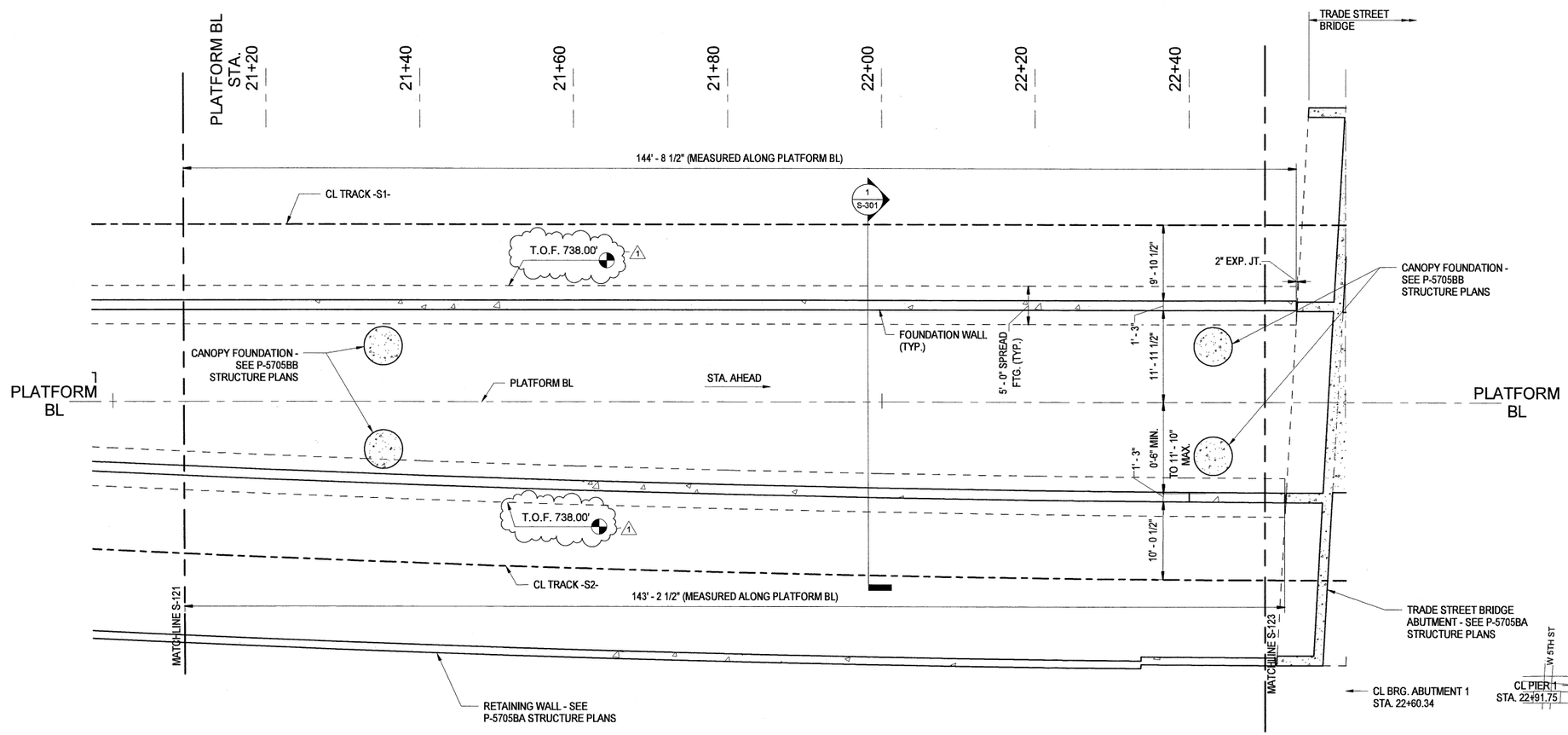

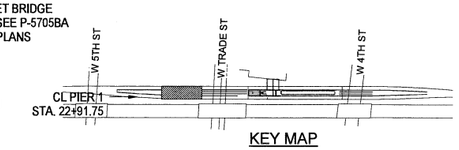

KEY MAP
SCALE: NTS

1 / S-132 ENLARGED PLATFORM FOUNDATION PLAN 2
SCALE: 1/8" = 1'-0"

PROJECT NO. P-5705BB
MECKLENBURG COUNTY

PROJECT NO. 19+68.93 -S1-

SHEET 2 OF 7

NORTH CAROLINA PROFESSIONAL SEAL 045044 ENGINEER CHRISTOPHER PARK
DocuSigned by: Christopher Park
5/3/2018

DOCUMENT NOT CONSIDERED FINAL UNLESS ALL SIGNATURES COMPLETED

HNTB NORTH CAROLINA, P.C.
NC License No. C-1554
343 E. Six Forks Rd., Suite 200, Raleigh, N.C. 27609

DRAWN BY D TRACZYKIEWICZ DATE 3/27/2018
CHECKED BY C PARK DATE 3/27/2018
DWG. NO. 16

STATE OF NORTH CAROLINA
DEPARTMENT OF TRANSPORTATION
RALEIGH

ENLARGED PLATFORM FOUNDATION PLAN

REVISIONS						
NO.	BY	DATE	NO.	BY	DATE	
1	CP	5/2/18	3			
2			4			

SHEET NO. S-132
TOTAL SHEETS 98

DocuSign Envelope ID: BF749189-FFAF-4251-8601-6EB898AB2561

0012DEL_P28
1001ADD_P28

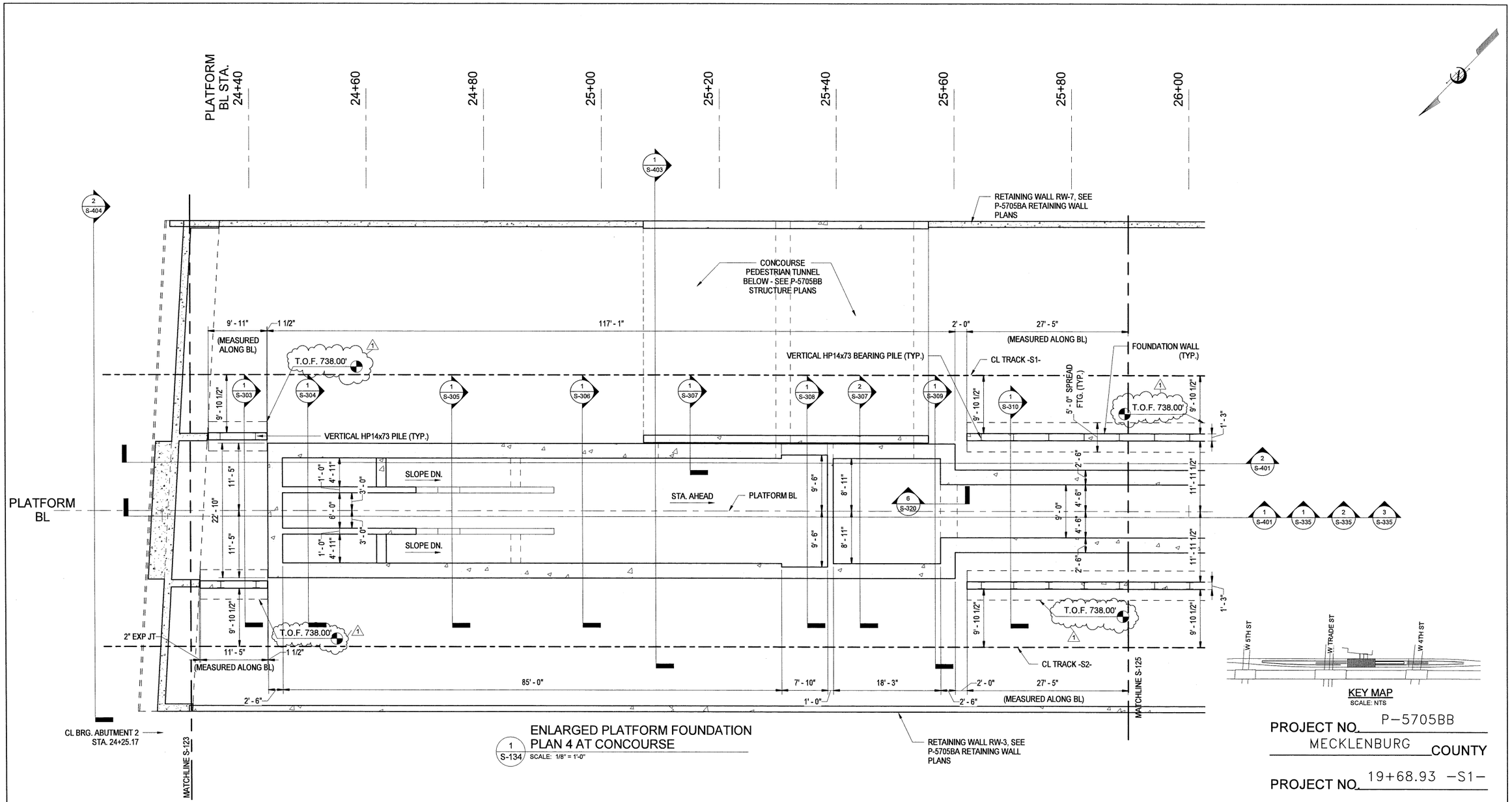

1 S-134 ENLARGED PLATFORM FOUNDATION PLAN 4 AT CONCOURSE
SCALE: 1/8" = 1'-0"

KEY MAP
SCALE: NTS

PROJECT NO. P-5705BB
MECKLENBURG COUNTY
PROJECT NO. 19+68.93 -S1-

SHEET 4 OF 7

NORTH CAROLINA PROFESSIONAL SEAL 045044 ENGINEER CHRISTOPHER PARK
5/3/2018
DocuSigned by: Christopher Park
D360CEE83E5048D...

DOCUMENT NOT CONSIDERED FINAL UNLESS ALL SIGNATURES COMPLETED

HNTB NORTH CAROLINA, P.C.
NC License No. C-1554
343 E. Six Forks Rd., Suite 200, Raleigh, N.C. 27609

DRAWN BY D TRACZYKIEWICZ DATE 3/27/2018
CHECKED BY C PARK DATE 3/27/2018
DWG. NO. 18

STATE OF NORTH CAROLINA
DEPARTMENT OF TRANSPORTATION
RALEIGH

ENLARGED PLATFORM FOUNDATION PLAN

REVISIONS						SHEET NO.
NO.	BY	DATE	NO.	BY	DATE	S-134
1	CP	5/2/18	3			TOTAL SHEETS
2			4			98

DocuSign Envelope ID: BF749189-FFAF-4251-8601-6EB898AB2561

0012DEL_P28
1001ADD_P28

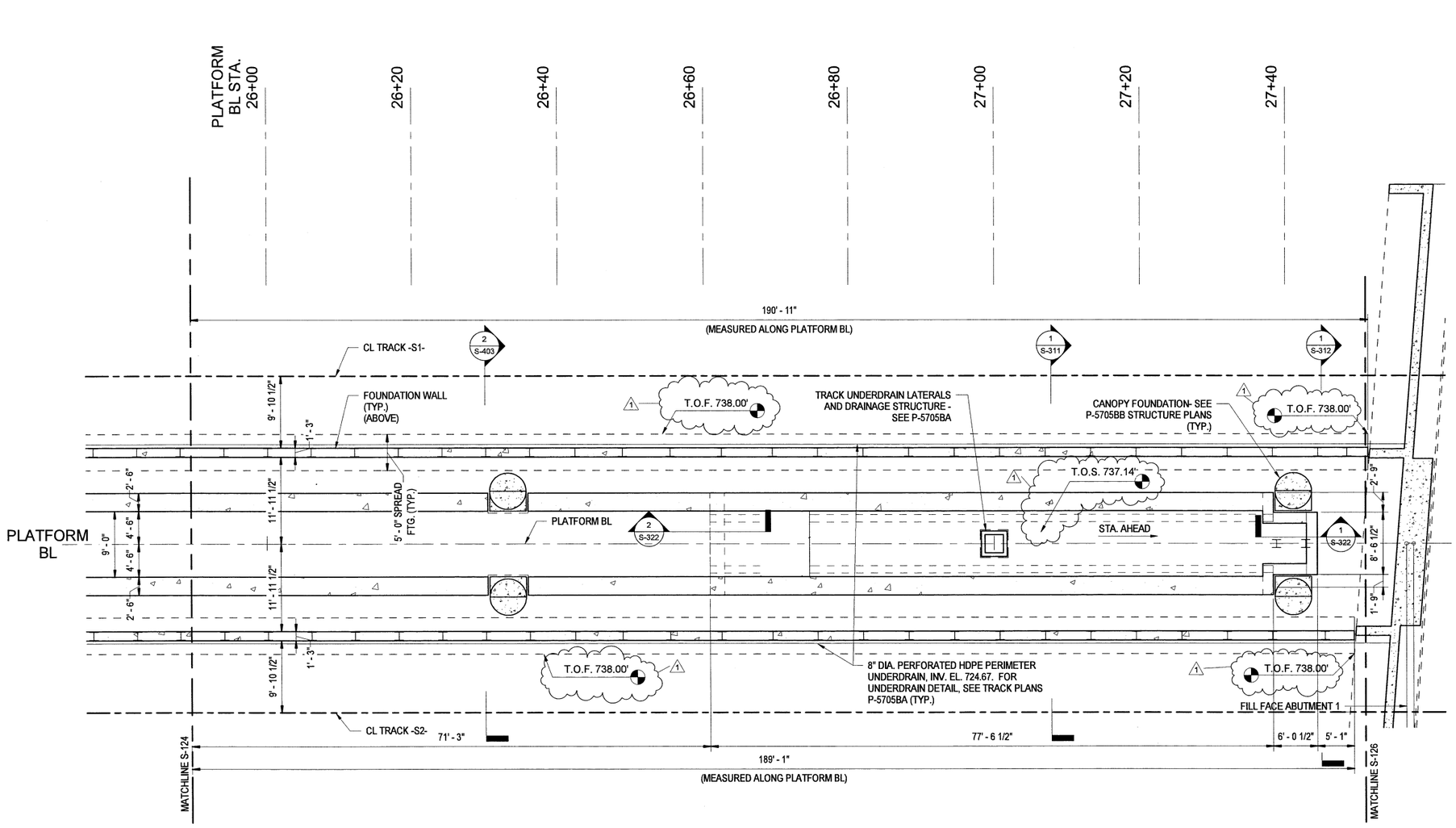

1 S-135 ENLARGED PLATFORM FOUNDATION PLAN 5 AT CONCOURSE
SCALE: 1/8" = 1'-0"

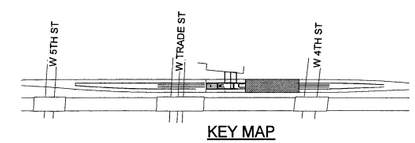

KEY MAP
SCALE: NTS

PROJECT NO. P-5705BB
MECKLENBURG COUNTY
PROJECT NO. 19+68.93 -S1-

SHEET 5 OF 7

NORTH CAROLINA PROFESSIONAL SEAL 045044 ENGINEER CHRISTOPHER PARK
DocuSigned by: Christopher Park
5/3/2018

DOCUMENT NOT CONSIDERED FINAL UNLESS ALL SIGNATURES COMPLETED

HNTB NORTH CAROLINA, P.C.
NC License No. C-1554
343 E. Six Forks Rd., Suite 200, Raleigh, N.C. 27609

DRAWN BY D TRACZYKIEWICZ DATE 3/27/2018
CHECKED BY Checker DATE 3/27/2018
DWG. NO. 19

STATE OF NORTH CAROLINA
DEPARTMENT OF TRANSPORTATION
RALEIGH

ENLARGED PLATFORM FOUNDATION PLAN

REVISIONS						SHEET NO.
NO.	BY	DATE	NO.	BY	DATE	S-135
1	CP	5/2/18	3			TOTAL SHEETS
2			4			98

DocuSign Envelope ID: BF749189-FFAF-4251-8601-6EB898AB2561

0012DEL_P28
1001ADD_P28

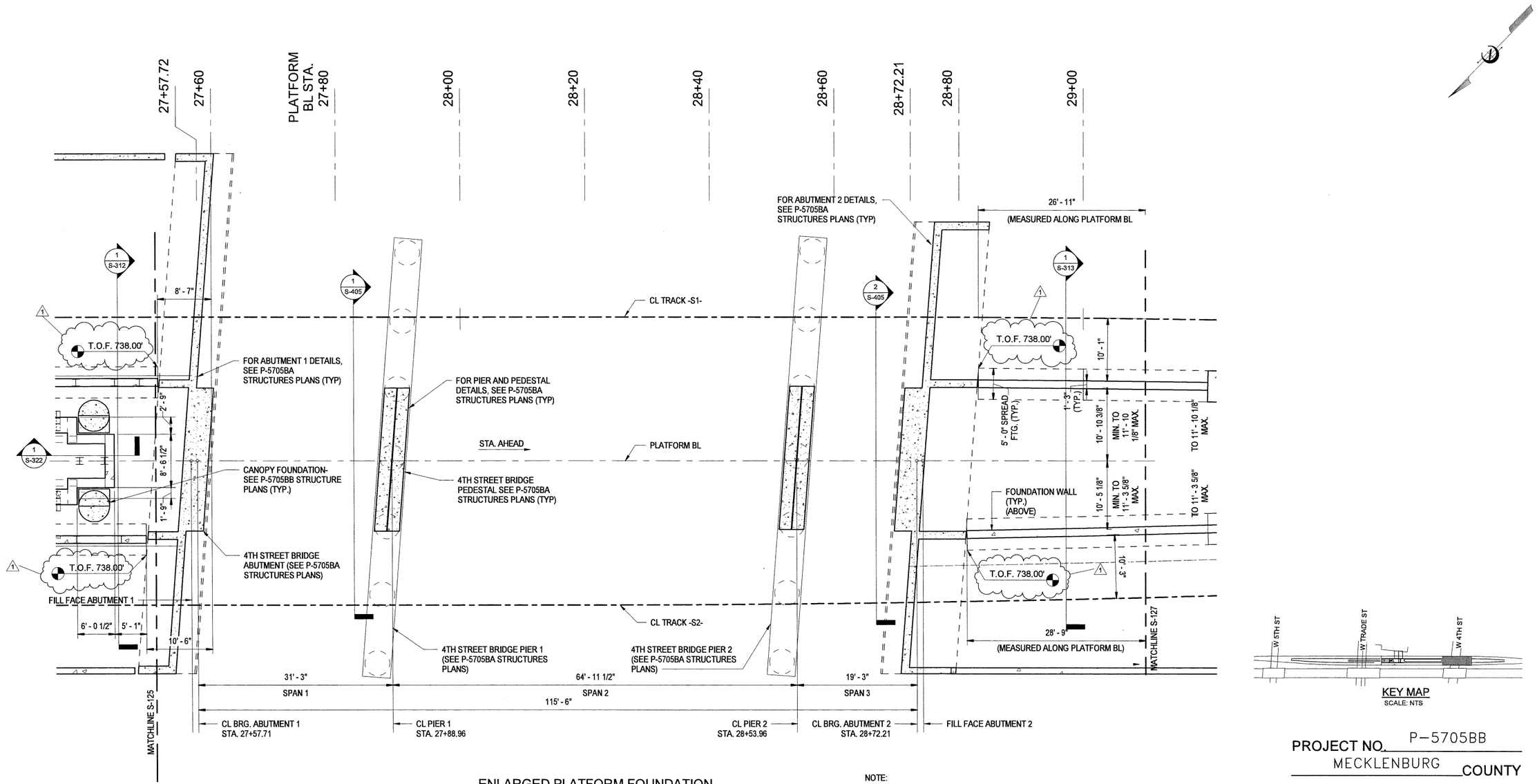

ENLARGED PLATFORM FOUNDATION PLAN 6 AT 4TH STREET

1 / S-136 SCALE: 1/8" = 1'-0"

NOTE:
BRIDGE SPAN MEASURED ALONG PLATFORM BL.

KEY MAP
SCALE: NTS

PROJECT NO. P-5705BB
MECKLENBURG COUNTY
PROJECT NO. 19+68.93 -S1-

SHEET 6 OF 7

NORTH CAROLINA PROFESSIONAL SEAL 045044 ENGINEER CHRISTOPHER PARK

DocuSigned by: Christopher Park
D38CCEE3E904BD...

5/3/2018

DOCUMENT NOT CONSIDERED FINAL UNLESS ALL SIGNATURES COMPLETED

HNTB NORTH CAROLINA, P.C.
NC License No. C-1554
343 E. Six Forks Rd., Suite 200, Raleigh, N.C. 27609

DRAWN BY D TRACZYKIEWICZ DATE 3/27/2018
CHECKED BY C PARK DATE 3/27/2018
DWG. NO. 20

STATE OF NORTH CAROLINA
DEPARTMENT OF TRANSPORTATION
RALEIGH

ENLARGED PLATFORM FOUNDATION PLAN

REVISIONS						SHEET NO.
NO.	BY	DATE	NO.	BY	DATE	S-136
1	CP	5/2/18	3			TOTAL SHEETS
2			4			98

DocuSign Envelope ID: BF749189-FFAF-4251-8601-6EB898AB2561

0012DEL_P28
1001ADD_P28

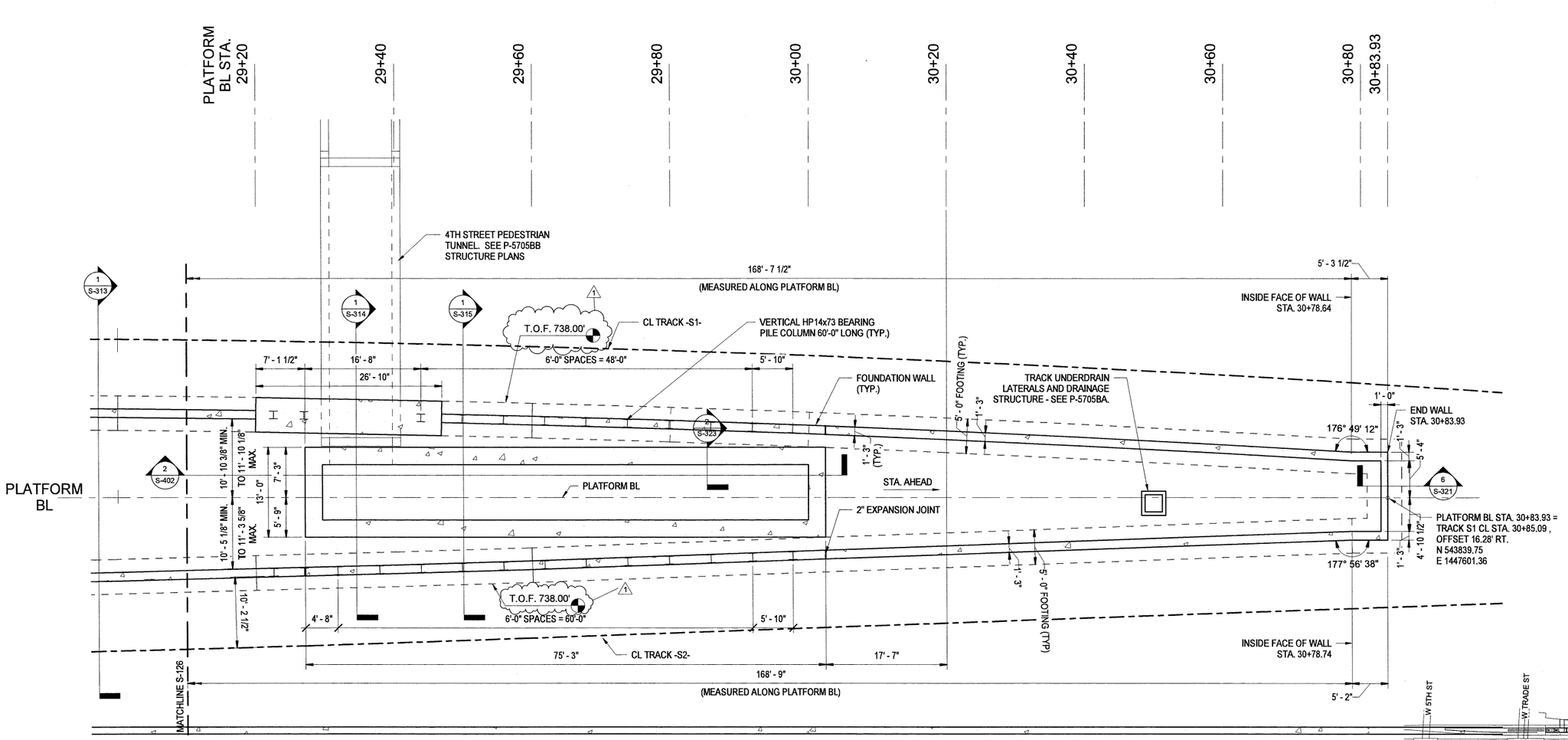

1 S-137 ENLARGED PLATFORM FOUNDATION PLAN 7
SCALE: 1/8" = 1'-0"

KEY MAP
SCALE: NTS

PROJECT NO. P-5705BB
MECKLENBURG COUNTY

PROJECT NO. 19+68.93 -S1-

SHEET 7 OF 7

NORTH CAROLINA PROFESSIONAL SEAL 045044 ENGINEER CHRISTOPHER PARK
5/3/2018
DocuSigned by: Christopher Park
C38CCEE52E5046D...

DOCUMENT NOT CONSIDERED FINAL UNLESS ALL SIGNATURES COMPLETED

STATE OF NORTH CAROLINA
DEPARTMENT OF TRANSPORTATION
RALEIGH

ENLARGED PLATFORM FOUNDATION PLAN

HNTB NORTH CAROLINA, P.C.
NC License No. C-1554
343 E. Six Forks Rd., Suite 200, Raleigh, N.C. 27609

DRAWN BY D TRACZYKIEWICZ DATE 3/27/2018
CHECKED BY C PARK DATE 3/27/2018
DWG. NO. 21

REVISIONS						SHEET NO.
NO.	BY	DATE	NO.	BY	DATE	S-137
1	CP	5/2/18	3			TOTAL SHEETS
2			4			98

DocuSign Envelope ID: 46BB3D7E-0EE8-4D05-ABC2-AB81CF8BC691

0012DEL_P28
1001ADD_P28

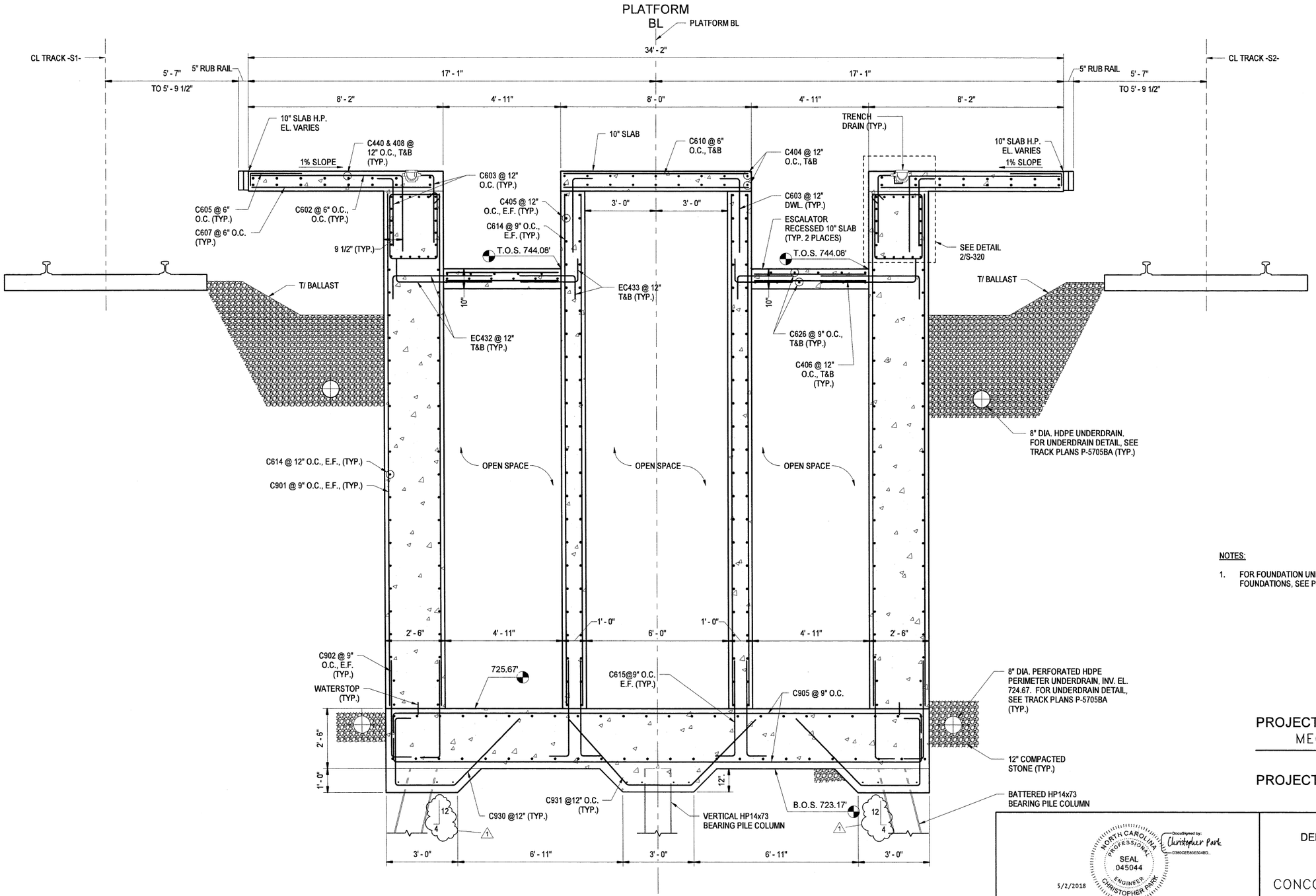

1 S-304 PLATFORM SECTION - STA. 24+50 - AT UPPER ESCALATOR PIT
SCALE: 1/2" = 1'-0"

NOTES:

1. FOR FOUNDATION UNDERDRAIN ALONG THE PLATFORM FOUNDATIONS, SEE P-5705BA TRACK PLANS.

PROJECT NO. P-5705BB
MECKLENBURG COUNTY
PROJECT NO. 19+68.93 -S1-

NORTH CAROLINA PROFESSIONAL SEAL 045044 ENGINEER CHRISTOPHER PARK
DocuSigned by: Christopher Park
5/2/2018

DOCUMENT NOT CONSIDERED FINAL UNLESS ALL SIGNATURES COMPLETED

HNTB NORTH CAROLINA, P.C.
NC License No. C-1554
343 E. Six Forks Rd., Suite 200, Raleigh, N.C. 27609

DRAWN BY D TRACZYKIEWICZ DATE 3/27/2018
CHECKED BY C PARK DATE 3/27/2018
DWG. NO. 32

STATE OF NORTH CAROLINA
DEPARTMENT OF TRANSPORTATION
RALEIGH

CONCOURSE SECTION – STA. 24+50

REVISIONS						SHEET NO.
NO.	BY	DATE	NO.	BY	DATE	S-304
1	CP	5/2/18	3			TOTAL SHEETS
2			4			98

DocuSign Envelope ID: 46BB3D7E-0EE8-4D05-ABC2-ABB1CF8BC691

0012DEL_P28
1001ADD_P28

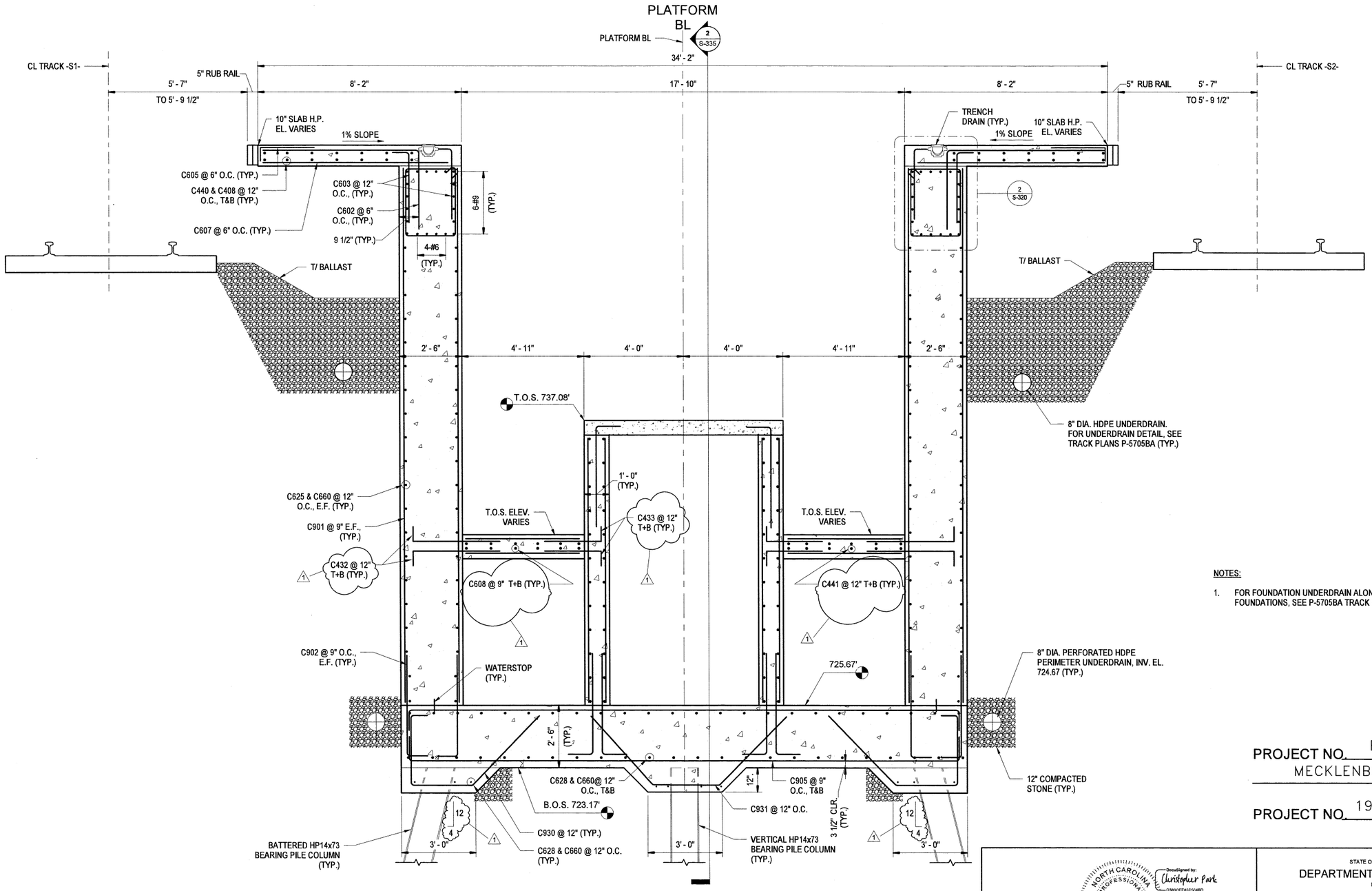

1 / S-305 CONCOURSE SECTION STA. 24+75 AT STAIR LANDING
SCALE: 1/2" = 1'-0"

NOTES:

1. FOR FOUNDATION UNDERDRAIN ALONG THE PLATFORM FOUNDATIONS, SEE P-5705BA TRACK PLANS.

PROJECT NO. P-5705BB
MECKLENBURG COUNTY
PROJECT NO. 19+68.93 -S1-

NORTH CAROLINA PROFESSIONAL SEAL 045044 ENGINEER CHRISTOPHER PARK
DocuSigned by: Christopher Park
5/2/2018

DOCUMENT NOT CONSIDERED FINAL UNLESS ALL SIGNATURES COMPLETED

STATE OF NORTH CAROLINA
DEPARTMENT OF TRANSPORTATION
RALEIGH

CONCOURSE SECTION - STA. 24+75

HNTB NORTH CAROLINA, P.C.
NC License No. C-1554
343 E. Six Forks Rd., Suite 200, Raleigh, N.C. 27609

DRAWN BY D TRACZYKIEWICZ DATE 3/27/2018
CHECKED BY C PARK DATE 3/27/2018
DWG. NO. 33

REVISIONS					
NO.	BY	DATE	NO.	BY	DATE
1	CP	5/2/18	3		
2			4		

SHEET NO. S-305
TOTAL SHEETS 98

DocuSign Envelope ID: 46BB3D7E-0EE8-4D05-ABC2-ABB1CF8BC691

0012DEL_P28
1001ADD_P28

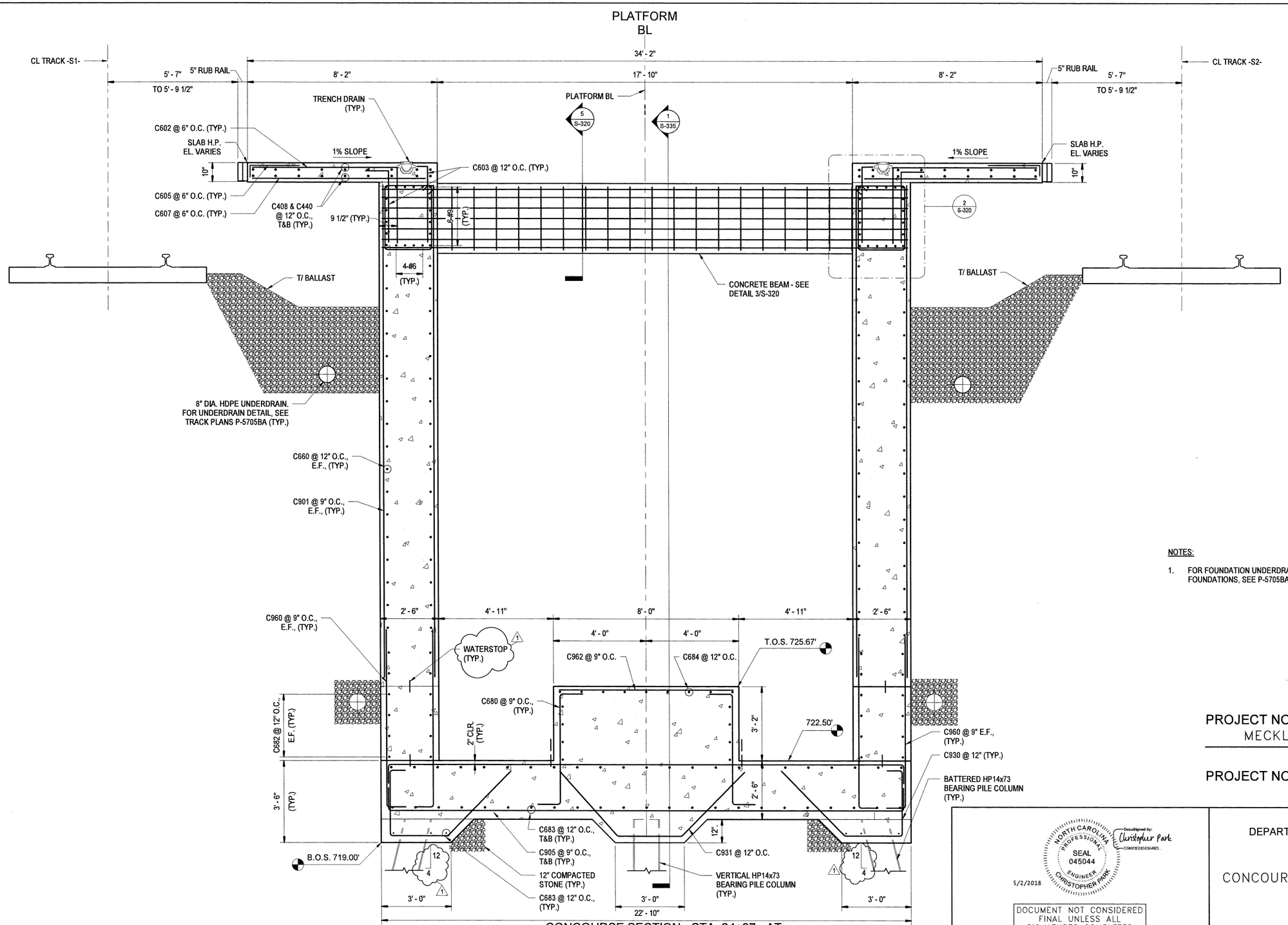

1
S-306
CONCOURSE SECTION - STA. 24+97 - AT
LOWER ESCALATOR PIT
SCALE: 1/2" = 1'-0"

NOTES:

1. FOR FOUNDATION UNDERDRAIN ALONG THE PLATFORM FOUNDATIONS, SEE P-5705BA TRACK PLANS.

PROJECT NO. P-5705BB
MECKLENBURG COUNTY

PROJECT NO. 19+68.93 -S1-

NORTH CAROLINA PROFESSIONAL SEAL 045044 ENGINEER CHRISTOPHER PARK
DocuSigned by: Christopher Park
5/2/2018

DOCUMENT NOT CONSIDERED
FINAL UNLESS ALL
SIGNATURES COMPLETED

HNTB NORTH CAROLINA, P.C.
NC License No. C-1554
343 E. Six Forks Rd., Suite 200, Raleigh, N.C. 27609

DRAWN BY D TRACZYKIEWICZ DATE 3/27/2018
CHECKED BY C PARK DATE 3/27/2018
DWG. NO. 34

STATE OF NORTH CAROLINA
DEPARTMENT OF TRANSPORTATION
RALEIGH

CONCOURSE SECTION – STA. 24+97

REVISIONS						
NO.	BY	DATE	NO.	BY	DATE	
1	CP	5/2/18	3			
2			4			

SHEET NO. S-306
TOTAL SHEETS 98

DocuSign Envelope ID: 46BB3D7E-0EE8-4D05-ABC2-ABB1CF8BC691

0012DEL_P28
1001ADD_P28

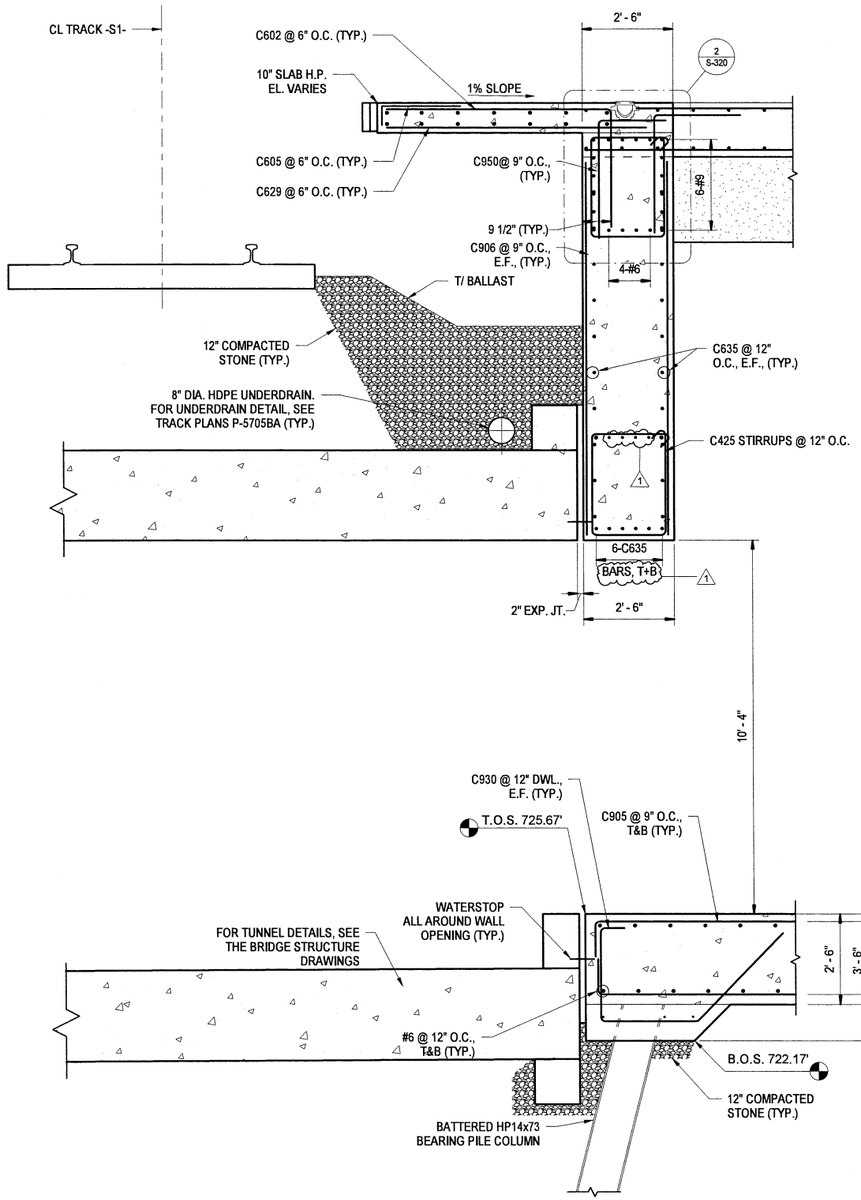

1 S-307 CONCOURSE SECTION - STA. 25+15 AT PEDESTRIAN TUNNEL
SCALE: 1/2" = 1'-0"

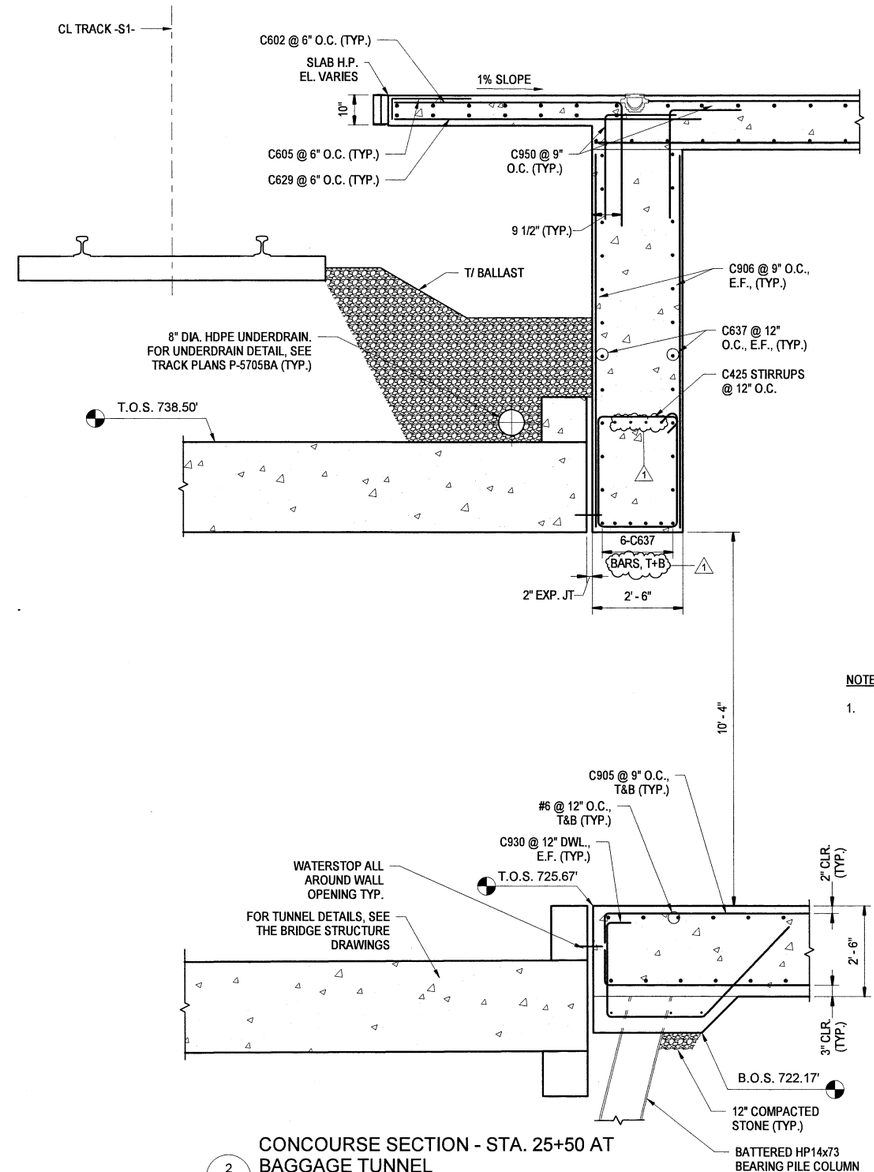

2 S-307 CONCOURSE SECTION - STA. 25+50 AT BAGGAGE TUNNEL
SCALE: 1/2" = 1'-0"

NOTES:

1. FOR FOUNDATION UNDERDRAIN ALONG THE PLATFORM FOUNDATIONS, SEE P-5705BA TRACK PLANS.

PROJECT NO. P-5705BB
MECKLENBURG COUNTY
PROJECT NO. 19+68.93 -S1-

NORTH CAROLINA PROFESSIONAL SEAL 045044 ENGINEER CHRISTOPHER PARK
DocuSigned by: Christopher Park
5/2/2018

DOCUMENT NOT CONSIDERED FINAL UNLESS ALL SIGNATURES COMPLETED

HNTB NORTH CAROLINA, P.C.
NC License No. C-1554
343 E. Six Forks Rd., Suite 200, Raleigh, N.C. 27609

DRAWN BY D TRACZYKIEWICZ DATE 3/27/2018
CHECKED BY C PARK DATE 3/27/2018
DWG. NO. 35

STATE OF NORTH CAROLINA
DEPARTMENT OF TRANSPORTATION
RALEIGH

CONCOURSE SECTION – STA. 25+15, STA. 25+50

REVISIONS						SHEET NO.
NO.	BY	DATE	NO.	BY	DATE	S-307
1	CP	5/2/18	3			TOTAL SHEETS
2			4			98

DocuSign Envelope ID: 46BB3D7E-0EE8-4D05-ABC2-ABB1CF8BC691

0012DEL_P28
1001ADD_P28

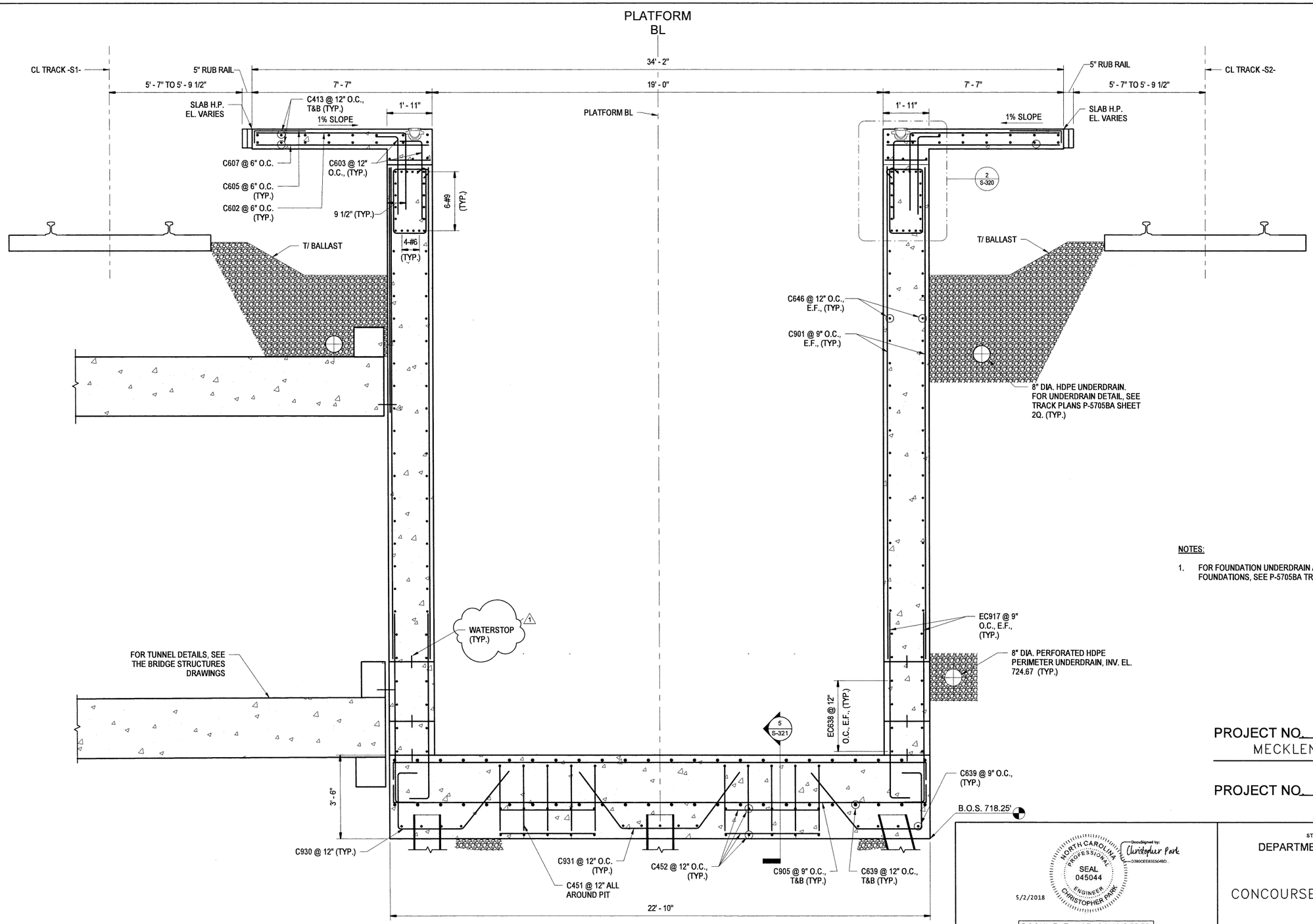

1
S-308
CONCOURSE SECTION - STA. 25+35 AT
ELEVATOR PIT
SCALE: 1/2" = 1'-0"

NOTES:

1. FOR FOUNDATION UNDERDRAIN ALONG THE PLATFORM FOUNDATIONS, SEE P-5705BA TRACK PLANS.

PROJECT NO. P-5705BB
MECKLENBURG COUNTY
PROJECT NO. 19+68.93 -S1-

NORTH CAROLINA PROFESSIONAL SEAL 045044 ENGINEER CHRISTOPHER PARK
DocuSigned by: Christopher Park
5/2/2018

DOCUMENT NOT CONSIDERED FINAL UNLESS ALL SIGNATURES COMPLETED

HNTB NORTH CAROLINA, P.C.
NC License No. C-1554
343 E. Six Forks Rd., Suite 200, Raleigh, N.C. 27609

DRAWN BY D TRACZYKIEWICZ DATE 3/27/2018
CHECKED BY C PARK DATE 3/27/2018
DWG. NO. 36

STATE OF NORTH CAROLINA
DEPARTMENT OF TRANSPORTATION
RALEIGH

CONCOURSE SECTION - STA. 25+35

REVISIONS						
NO.	BY	DATE	NO.	BY	DATE	
1	CP	5/2/18	3			
2			4			

SHEET NO. S-308
TOTAL SHEETS 98

DocuSign Envelope ID: 46BB3D7E-0EE8-4D05-ABC2-ABB1CF8BC691

0012DEL_P28
1001ADD_P28

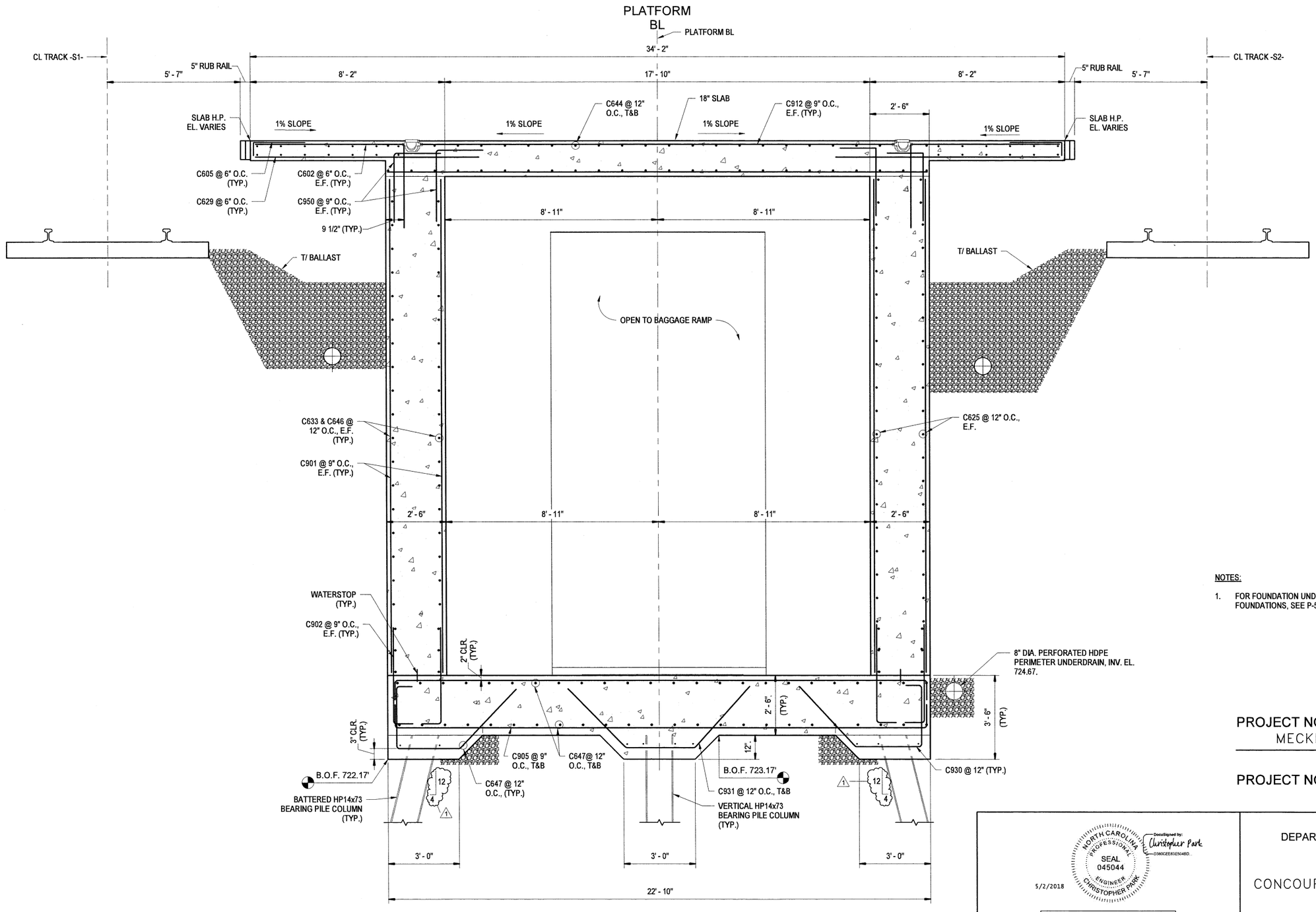

1 / S-309 CONCOURSE SECTION STA. 25+55
SCALE: 1/2" = 1'-0"

0 1' 2' 4'

NOTES:

1. FOR FOUNDATION UNDERDRAIN ALONG THE PLATFORM FOUNDATIONS, SEE P-5705BA TRACK PLANS.

PROJECT NO. P-5705BB
MECKLENBURG COUNTY
PROJECT NO. 19+68.93 -S1-

NORTH CAROLINA PROFESSIONAL SEAL 045044 ENGINEER CHRISTOPHER PARK
DocuSigned by: Christopher Park D380CEE81E504BD...
5/2/2018

DOCUMENT NOT CONSIDERED FINAL UNLESS ALL SIGNATURES COMPLETED

STATE OF NORTH CAROLINA
DEPARTMENT OF TRANSPORTATION
RALEIGH

CONCOURSE SECTION - STA. 25+55

HNTB NORTH CAROLINA, P.C.
NC License No. C-1554
343 E. Six Forks Rd., Suite 200, Raleigh, N.C. 27609

DRAWN BY D TRACZYKIEWICZ DATE 3/27/2018
CHECKED BY C PARK DATE 3/27/2018
DWG. NO. 37

REVISIONS						
NO.	BY	DATE	NO.	BY	DATE	
1	CP	5/2/18	3			
2			4			

SHEET NO. S-309
TOTAL SHEETS 98

DocuSign Envelope ID: 46BB3D7E-0EE8-4D05-ABC2-ABB1CF8BC691

0012DEL_P28
1001ADD_P28

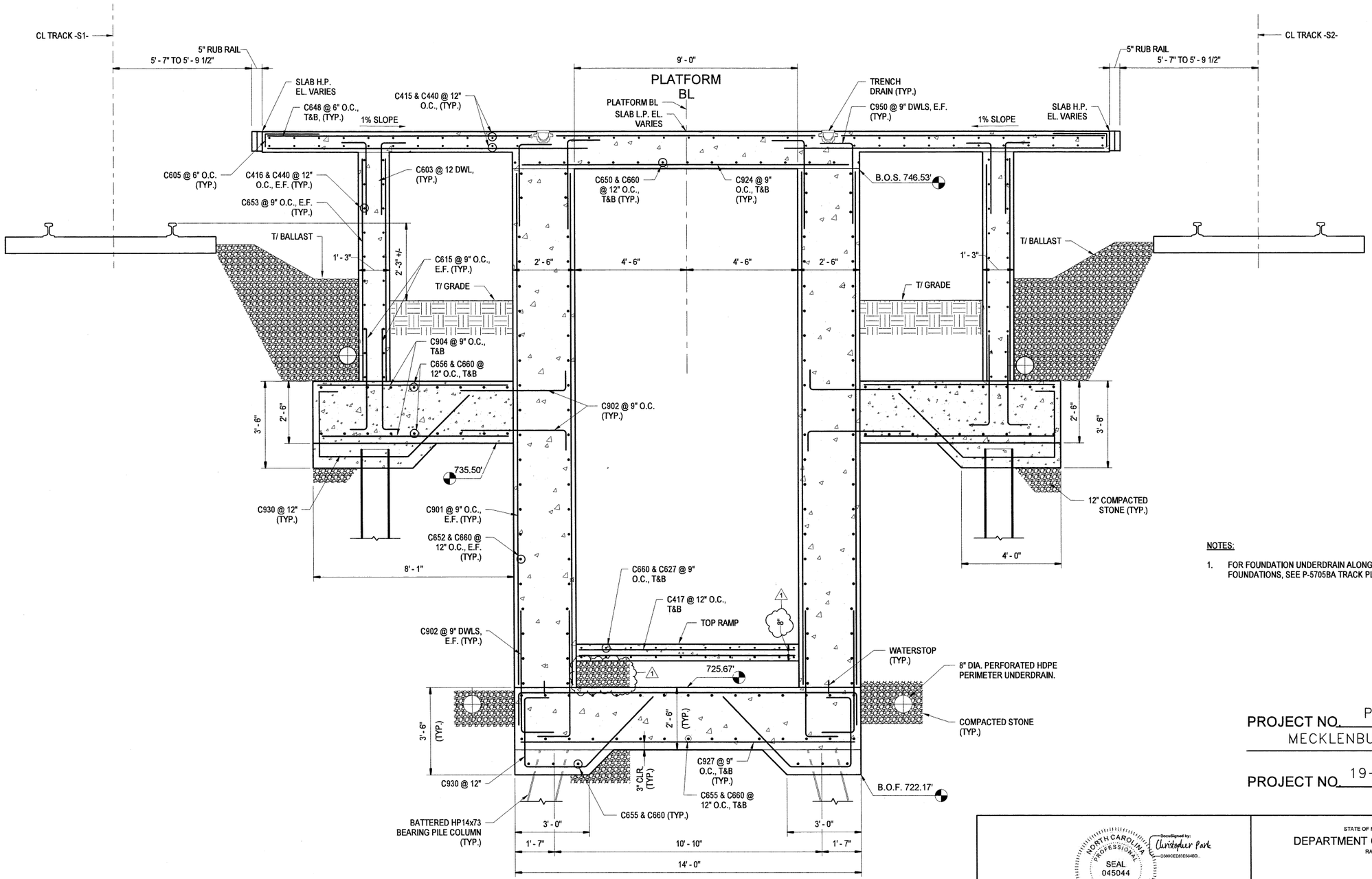

1 S-310 CONCOURSE SECTION - STA. 25+70 AT BAGGAGE RAMP

SCALE: 1/2" = 1'-0"

NOTES:

1. FOR FOUNDATION UNDERDRAIN ALONG THE PLATFORM FOUNDATIONS, SEE P-5705BA TRACK PLANS.

PROJECT NO. P-5705BB
MECKLENBURG COUNTY

PROJECT NO. 19+68.93 -S1-

NORTH CAROLINA PROFESSIONAL SEAL 045044 ENGINEER CHRISTOPHER PARK

DocuSigned by: Christopher Park
D360CEE81E54BD...

5/2/2018

DOCUMENT NOT CONSIDERED FINAL UNLESS ALL SIGNATURES COMPLETED

HNTB NORTH CAROLINA, P.C.
NC License No. C-1554
343 E. Six Forks Rd., Suite 200, Raleigh, N.C. 27609

DRAWN BY D TRACZYKIEWICZ DATE 3/27/2018
CHECKED BY C PARK DATE 3/27/2018
DWG. NO. 38

STATE OF NORTH CAROLINA
DEPARTMENT OF TRANSPORTATION
RALEIGH

BAGGAGE RAMP SECTION - STA. 25+70

REVISIONS						SHEET NO.
NO.	BY	DATE	NO.	BY	DATE	S-310
1	CP	5/2/18	3			TOTAL SHEETS
2			4			98

DocuSign Envelope ID: 46BB3D7E-0EE8-4D05-ABC2-ABB1CF8BC691

0012DEL_P28
1001ADD_P28

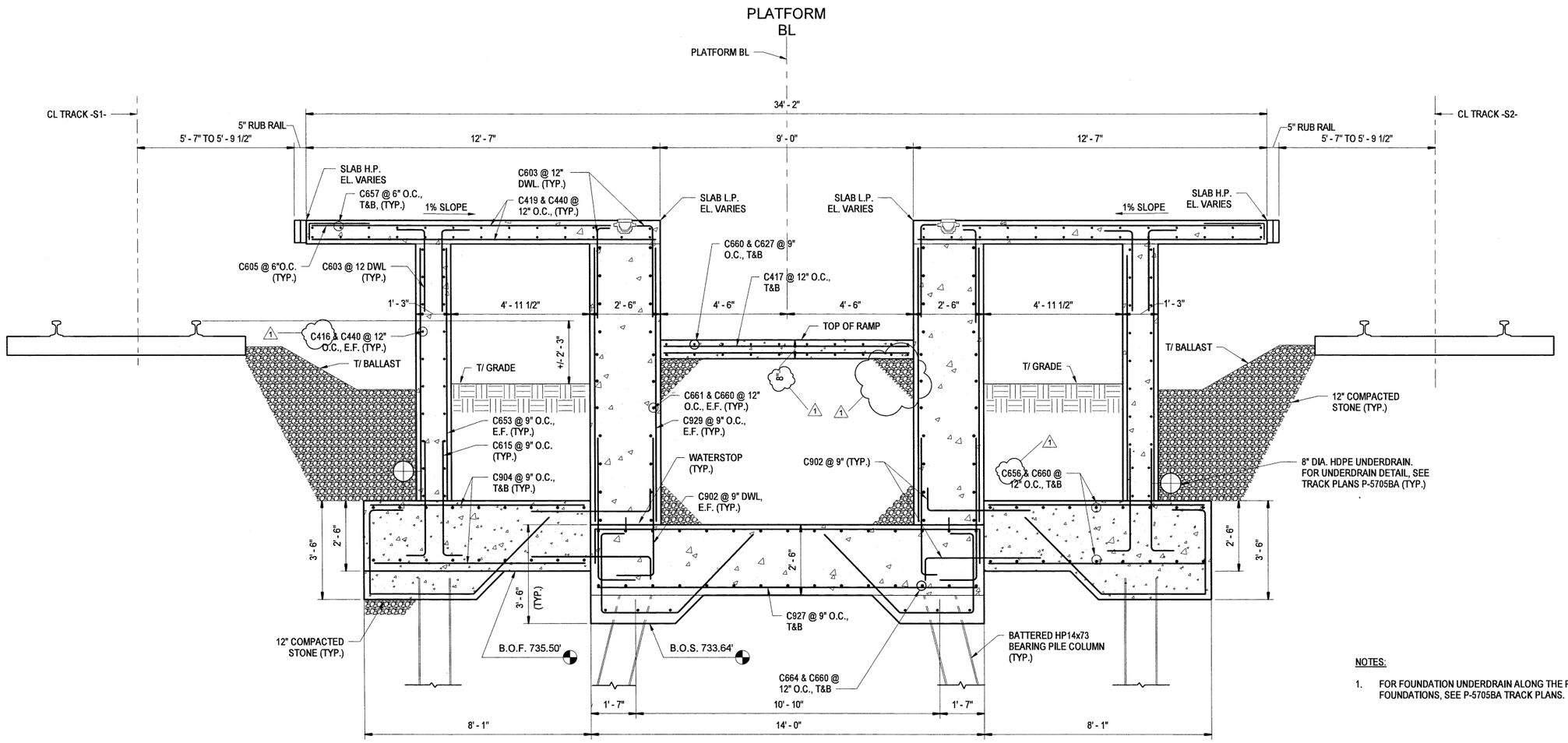

1
S-311

CONCOURSE SECTION - STA. 27+10 AT BAGGAGE RAMP

SCALE: 1/2" = 1'-0"

NOTES:

1. FOR FOUNDATION UNDERDRAIN ALONG THE PLATFORM FOUNDATIONS, SEE P-5705BA TRACK PLANS.

PROJECT NO. P-5705BB
MECKLENBURG COUNTY

PROJECT NO. 19+68.93 -S1-

NORTH CAROLINA PROFESSIONAL SEAL 045044 ENGINEER CHRISTOPHER PARK

DocuSigned by: Christopher Park
D380CEE93E504ED...

5/2/2018

DOCUMENT NOT CONSIDERED FINAL UNLESS ALL SIGNATURES COMPLETED

HNTB NORTH CAROLINA, P.C.
NC License No. C-1554
343 E. Six Forks Rd., Suite 200, Raleigh, N.C. 27609

DRAWN BY D TRACZYKIEWICZ DATE 3/27/2018
CHECKED BY C PARK DATE 3/27/2018
DWG. NO. 39

STATE OF NORTH CAROLINA
DEPARTMENT OF TRANSPORTATION
RALEIGH

BAGGAGE RAMP SECTION – STA. 27+10

REVISIONS						SHEET NO.
NO.	BY	DATE	NO.	BY	DATE	S-311
1	CP	5/2/18	3			TOTAL SHEETS
2			4			98

DocuSign Envelope ID: 055A6E04-C229-4A1B-B3E1-73E7C2215256

0012DEL_P28
1001ADD_P28

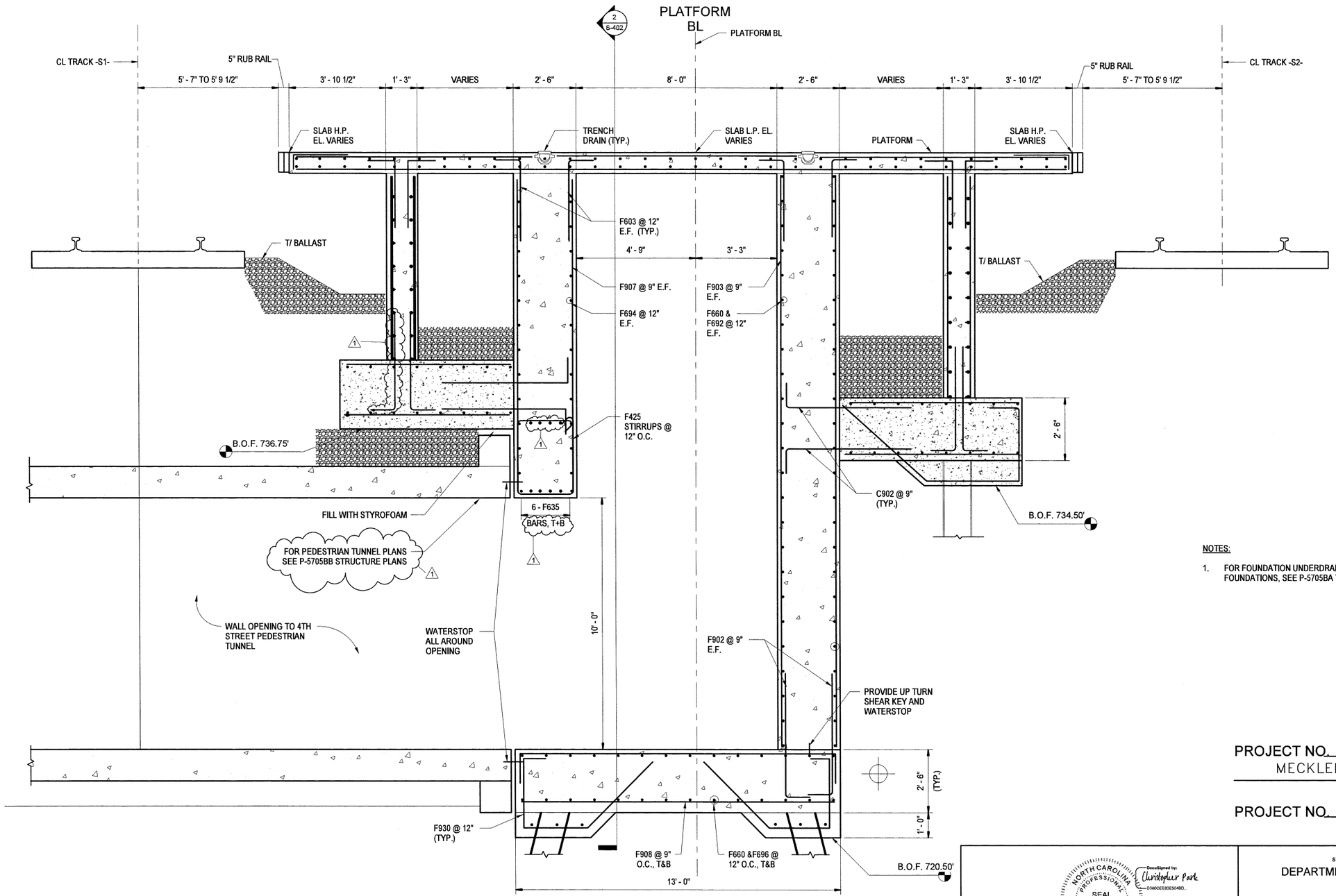

1
S-314
4TH STREET EGRESS STAIR SECTION AT STA. 29+35
SCALE: 1/2" = 1'-0"

NOTES:

1. FOR FOUNDATION UNDERDRAIN ALONG THE PLATFORM FOUNDATIONS, SEE P-5705BA TRACK PLANS.

PROJECT NO. P-5705BB
MECKLENBURG COUNTY
PROJECT NO. 19+68.93 -S1-

NORTH CAROLINA PROFESSIONAL SEAL 045044 ENGINEER CHRISTOPHER PARK
DocuSigned by: Christopher Park
D360CEE83E504BD...
5/2/2018

DOCUMENT NOT CONSIDERED FINAL UNLESS ALL SIGNATURES COMPLETED

HNTB NORTH CAROLINA, P.C.
NC License No. C-1554
343 E. Six Forks Rd., Suite 200, Raleigh, N.C. 27609

DRAWN BY D TRACZYKIEWICZ DATE 3/27/2018
CHECKED BY C PARK DATE 3/27/2018
DWG. NO. 42

STATE OF NORTH CAROLINA
DEPARTMENT OF TRANSPORTATION
RALEIGH

4TH STREET EGRESS STAIR
SECTION – STA. 29+35

REVISIONS						SHEET NO.
NO.	BY	DATE	NO.	BY	DATE	S-314
1	CP	5/2/18	3			TOTAL SHEETS
2			4			98

DocuSign Envelope ID: 055A6E04-C229-4A1B-B3E1-73E7C2215256

0012DEL_P28
1001ADD_P28

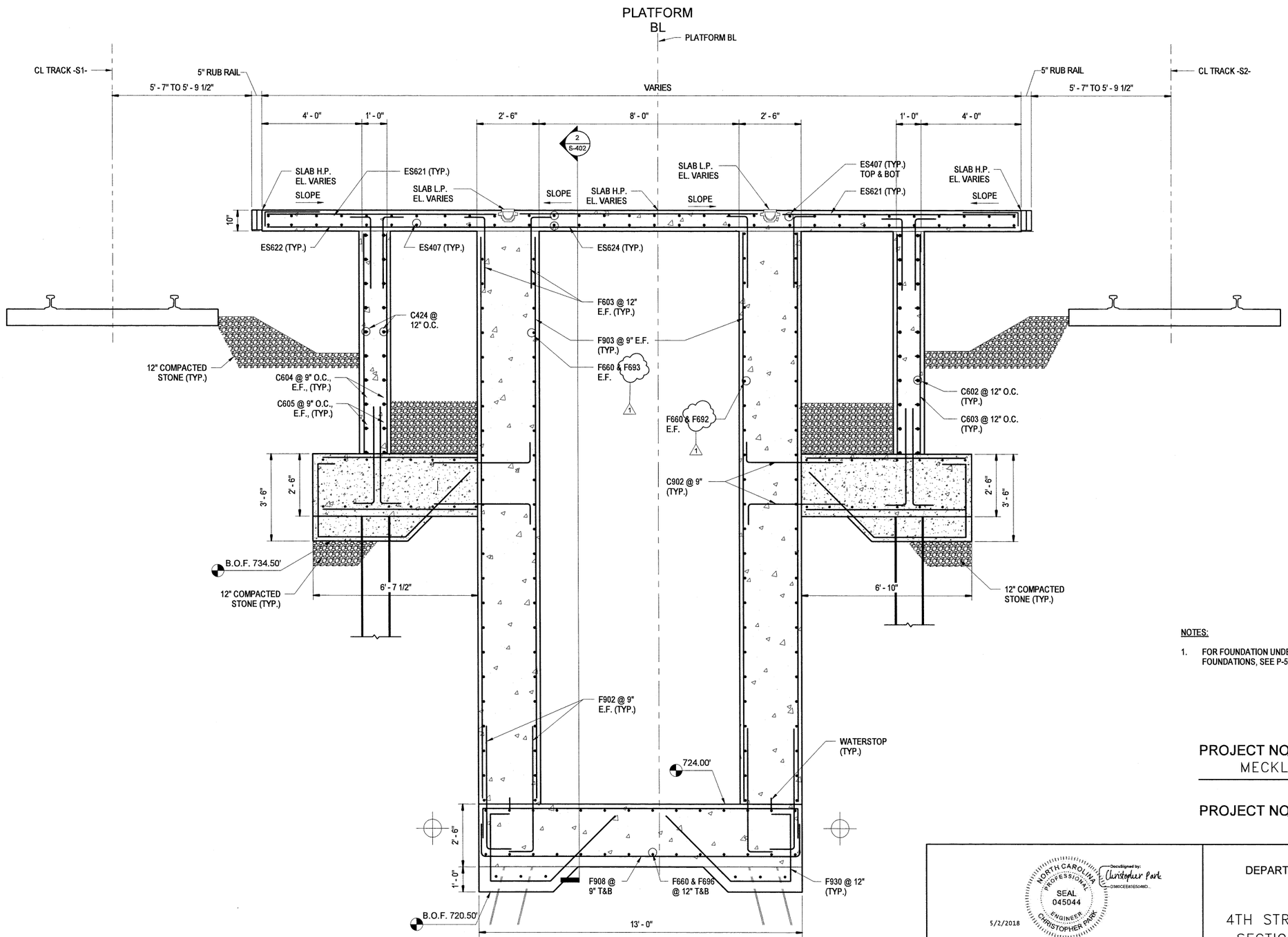

1
S-315
4TH STREET EGRESS STAIR SECTION AT STA. 29+50
SCALE: 1/2" = 1'-0"

NOTES:

1. FOR FOUNDATION UNDERDRAIN ALONG THE PLATFORM FOUNDATIONS, SEE P-5705BA TRACK PLANS.

PROJECT NO. P-5705BB
MECKLENBURG COUNTY
PROJECT NO. 19+68.93 -S1-

NORTH CAROLINA PROFESSIONAL SEAL 045044 ENGINEER CHRISTOPHER PARK
DocuSigned by: Christopher Park
5/2/2018

DOCUMENT NOT CONSIDERED FINAL UNLESS ALL SIGNATURES COMPLETED

HNTB NORTH CAROLINA, P.C.
NC License No. C-1554
343 E. Six Forks Rd., Suite 200, Raleigh, N.C. 27609

DRAWN BY D TRACZYKIEWICZ DATE 3/27/2018
CHECKED BY C PARK DATE 3/27/2018
DWG. NO. 43

STATE OF NORTH CAROLINA
DEPARTMENT OF TRANSPORTATION
RALEIGH

4TH STREET EGRESS STAIR
SECTION – STA. 29+50

REVISIONS						
NO.	BY	DATE	NO.	BY	DATE	
1	CP	5/2/18	3			
2			4			

SHEET NO. S-315
TOTAL SHEETS 98

DocuSign Envelope ID: 055A6E04-C229-4A1B-B3E1-73E7C2215256

0012DEL_P28
1001ADD_P28

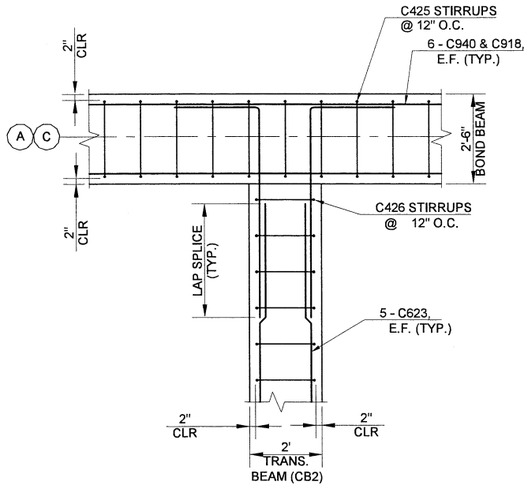

1 S-320 CONCOURSE SECTION 1
SCALE: 1/2" = 1'-0"

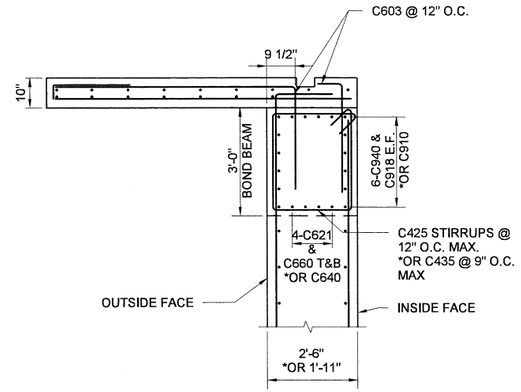

*AT ELEVATOR SECTION SEE 1/S-308

2 S-320 CONCOURSE SECTION 2
SCALE: 1/2" = 1'-0"

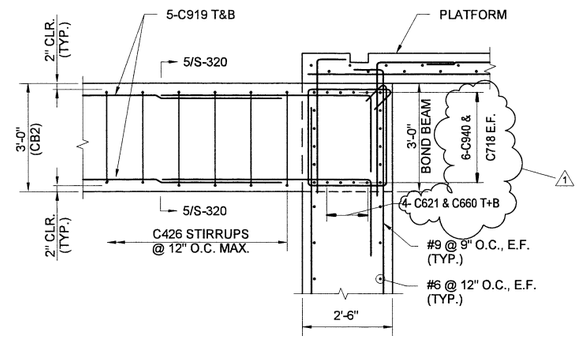

3 S-320 CONCOURSE SECTION 4
SCALE: 1/2" = 1'-0"

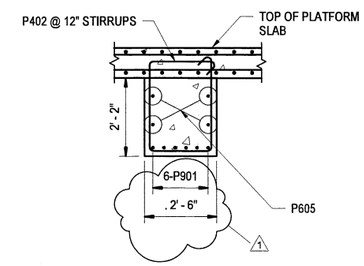

4 S-320 TRANSVERSE BEAM (CB1) AT PLATFORM
SCALE: 1/2" = 1'-0"

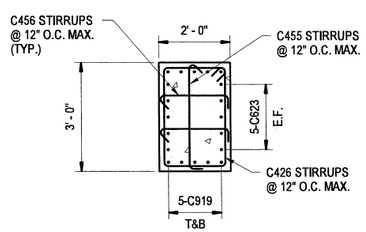

5 S-320 SECTION B-B TRANSVERSE BEAM (CB2) AT CONCOURSE
SCALE: 1/2" = 1'-0"

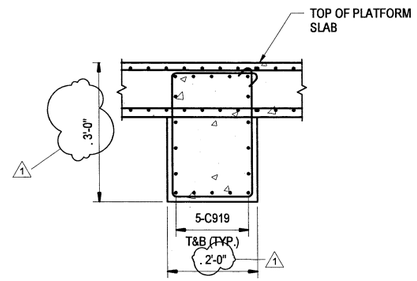

6 S-320 TRANSVERSE BEAM (CB3) AT CONCOURSE
SCALE: 1/2" = 1'-0"

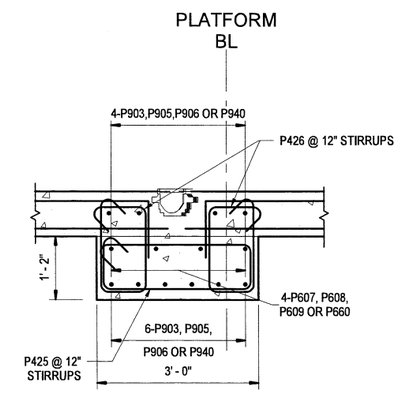

7 S-320 LONGITUDINAL BEAM (CB4) AT PLATFORM
SCALE: 3/4" = 1'-0"

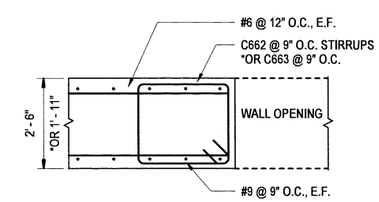

8 S-320 PILASTER AT WALL OPENINGS PLAN VIEW DETAIL
SCALE: 1/2" = 1'-0"

PROJECT NO. P-5705BB
MECKLENBURG COUNTY
PROJECT NO. 19+68.93 -S1-

SHEET 1 OF 4

NORTH CAROLINA PROFESSIONAL SEAL 045044 ENGINEER CHRISTOPHER PARK
DocuSigned by: Christopher Park
5/2/2018

DOCUMENT NOT CONSIDERED FINAL UNLESS ALL SIGNATURES COMPLETED

HNTB NORTH CAROLINA, P.C.
NC License No. C-1554
343 E. Six Forks Rd., Suite 200, Raleigh, N.C. 27609

DRAWN BY D TRACZYKIEWICZ DATE 3/27/2018
CHECKED BY C PARK DATE 3/27/2018
DWG. NO. 44

STATE OF NORTH CAROLINA
DEPARTMENT OF TRANSPORTATION
RALEIGH

CONCRETE SECTIONS AND DETAILS

REVISIONS						SHEET NO.
NO.	BY	DATE	NO.	BY	DATE	S-320
1	CP	5/2/18	3			TOTAL SHEETS
2			4			98

DocuSign Envelope ID: 055A6E04-C229-4A1B-B3E1-73E7C2215256

0012DEL_P28
1001ADD_P28

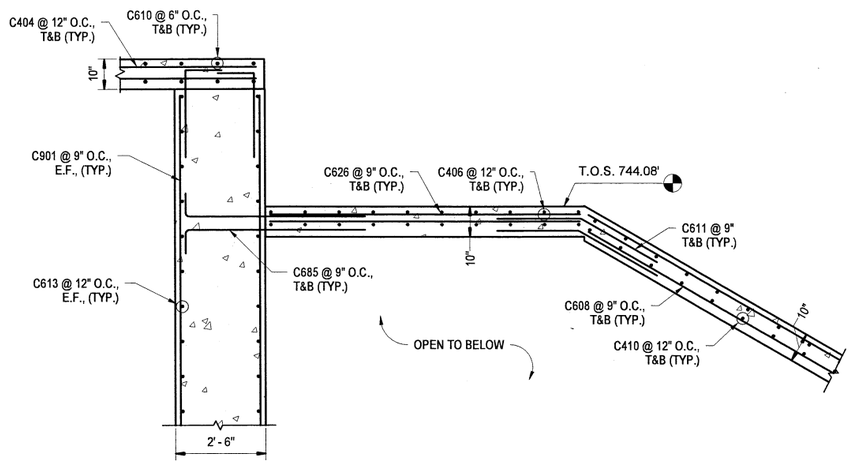

1 S-321 SECTION - UPPER ESCALATOR PIT
SCALE: 1/2" = 1'-0"

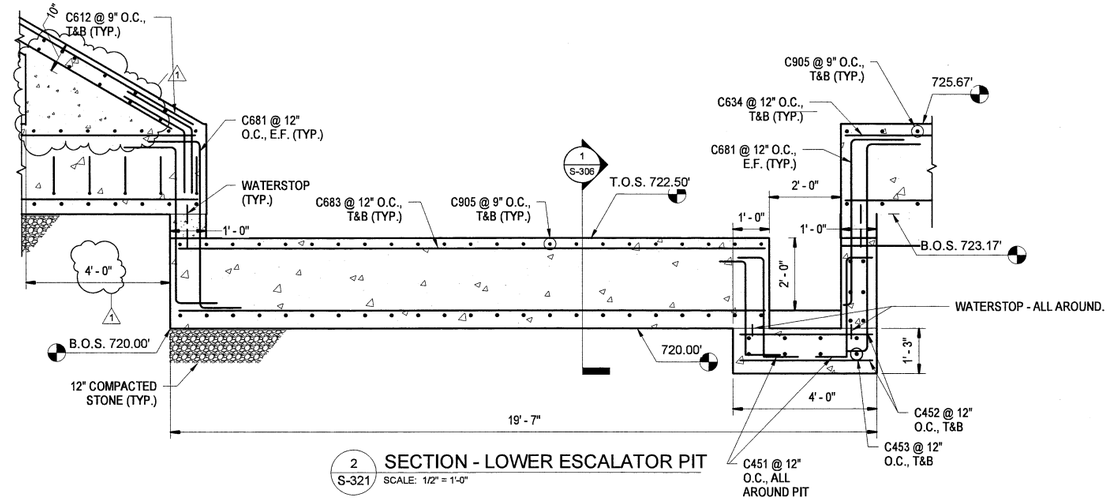

2 S-321 SECTION - LOWER ESCALATOR PIT
SCALE: 1/2" = 1'-0"

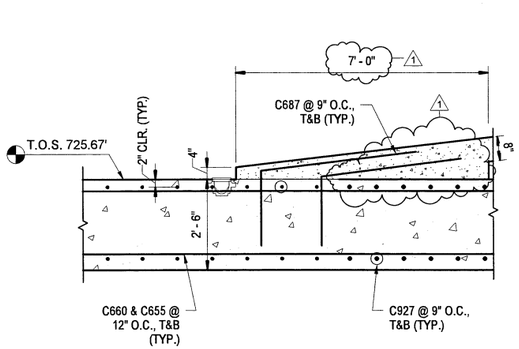

3 S-321 SECTION - BAGGAGE RAMP
SCALE: 1/2" = 1'-0"

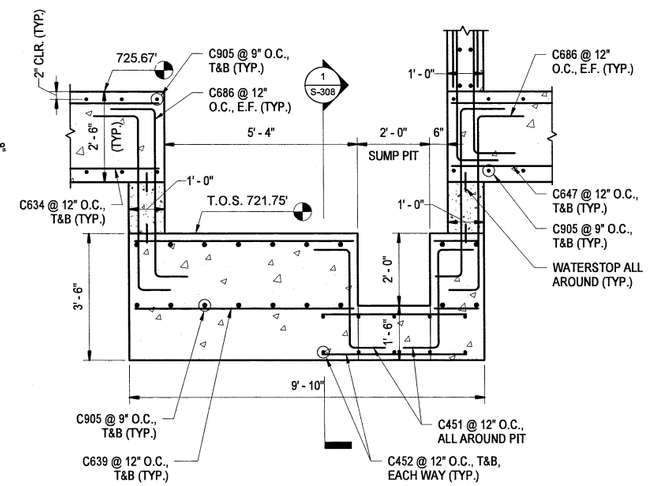

5 S-321 SECTION - ELEVATOR PIT
SCALE: 1/2" = 1'-0"

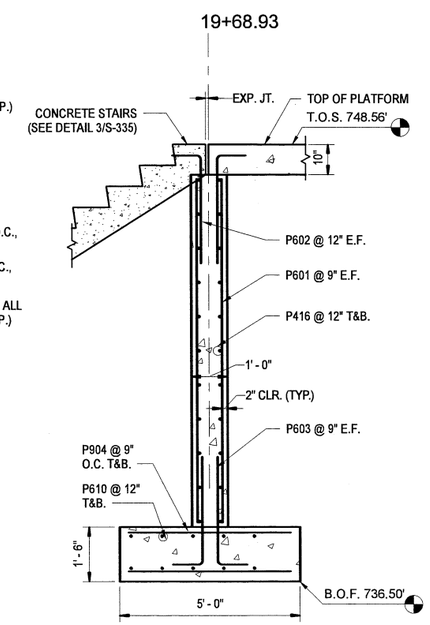

4 S-321 SECTION - 5TH STREET EGRESS STAIRS
SCALE: 1/2" = 1'-0"

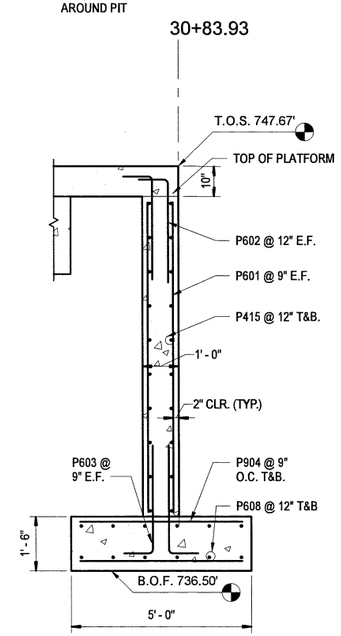

6 S-321 SECTION - END OF PLATFORM
SCALE: 1/2" = 1'-0"

PROJECT NO. P-5705BB
MECKLENBURG COUNTY
PROJECT NO. 19+68.93 -S1-

SHEET 2 OF 4

NORTH CAROLINA PROFESSIONAL SEAL 045044 ENGINEER CHRISTOPHER PARK
DocuSigned by: Christopher Park
5/2/2018

DOCUMENT NOT CONSIDERED FINAL UNLESS ALL SIGNATURES COMPLETED

HNTB NORTH CAROLINA, P.C.
NC License No. C-1554
343 E. Six Forks Rd., Suite 200, Raleigh, N.C. 27609

DRAWN BY D TRACZYKIEWICZ DATE 3/27/2018
CHECKED BY C PARK DATE 3/27/2018
DWG. NO. 45

STATE OF NORTH CAROLINA
DEPARTMENT OF TRANSPORTATION
RALEIGH

CONCRETE SECTIONS AND DETAILS

REVISIONS						
NO.	BY	DATE	NO.	BY	DATE	
1	CP	5/2/18	3			
2			4			

SHEET NO. S-321
TOTAL SHEETS 98

DocuSign Envelope ID: 055A6E04-C229-4A1B-B3E1-73E7C2215256

0012DEL_P28
1001ADD_P28

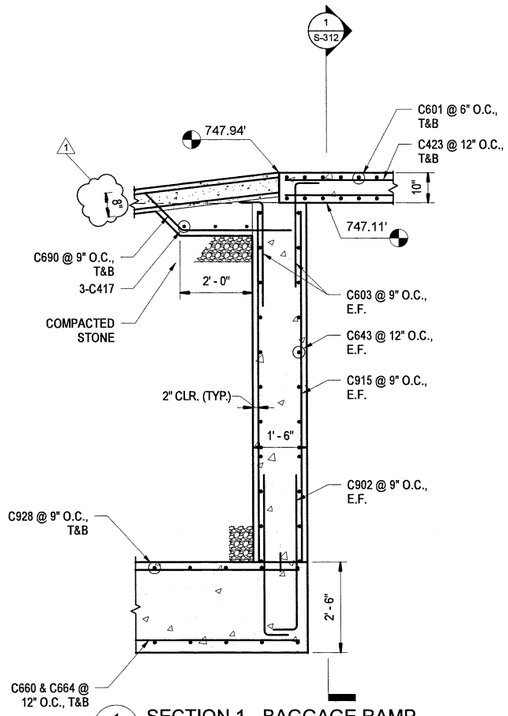

1 S-322 SECTION 1 - BAGGAGE RAMP
SCALE: 1/2" = 1'-0"

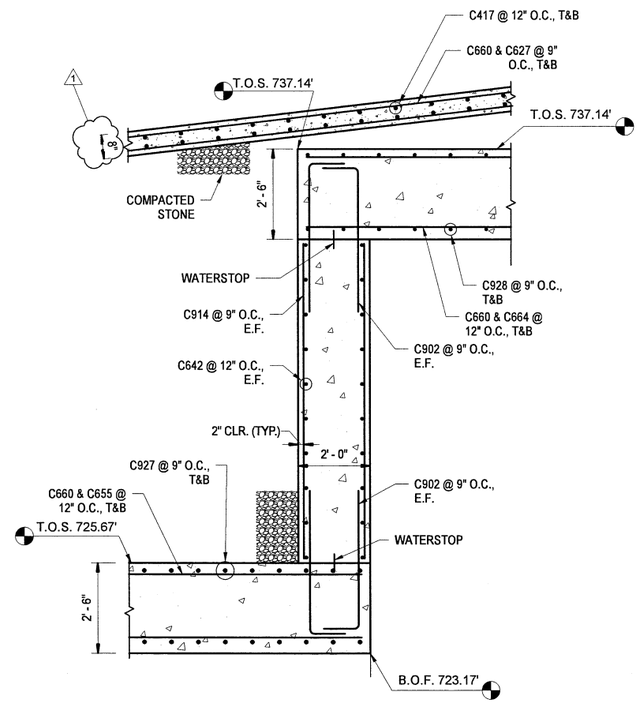

2 S-322 SECTION 2 - BAGGAGE RAMP
SCALE: 1/2" = 1'-0"

PROJECT NO. P-5705BB
MECKLENBURG COUNTY

PROJECT NO. 19+68.93 -S1-

SHEET 3 OF 4

NORTH CAROLINA PROFESSIONAL SEAL 045044 ENGINEER CHRISTOPHER PARK
5/2/2018
DocuSigned by: Christopher Park
D380CEE8E5C4BD...

DOCUMENT NOT CONSIDERED FINAL UNLESS ALL SIGNATURES COMPLETED

HNTB NORTH CAROLINA, P.C.
NC License No. C-1554
343 E. Six Forks Rd., Suite 200, Raleigh, N.C. 27609

DRAWN BY D TRACZYKIEWICZ DATE 3/27/2018
CHECKED BY C PARK DATE 3/27/2018
DWG. NO. 46

STATE OF NORTH CAROLINA
DEPARTMENT OF TRANSPORTATION
RALEIGH

CONCRETE SECTIONS AND DETAILS

REVISIONS						SHEET NO.
NO.	BY	DATE	NO.	BY	DATE	S-322
1	CP	5/2/18	3			TOTAL SHEETS
2			4			98

DocuSign Envelope ID: 055A6E04-C229-4A1B-B3E1-73E7C2215256

0012DEL_P28
1001ADD_P28

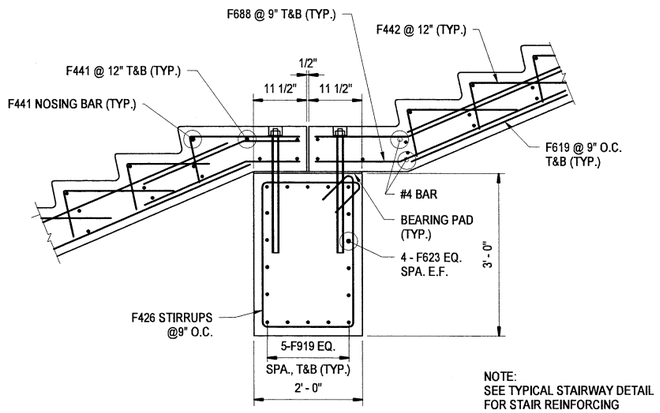

NOTE:
SEE TYPICAL STAIRWAY DETAIL
FOR STAIR REINFORCING

1 / S-323 4TH STREET EGRESS STAIR LANDING
SCALE: 3/4" = 1'-0"

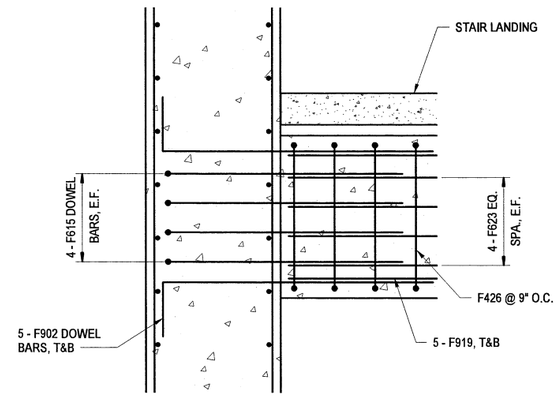

2 / S-323 STAIR SUPPORT BEAM TO WALL CONNECTION DETAIL
SCALE: 3/4" = 1'-0"

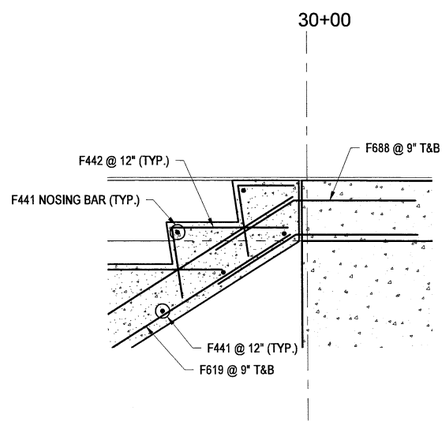

3 / S-323 4TH STREET EGRESS STAIRWAY TOP LANDING
SCALE: 1" = 1'-0"

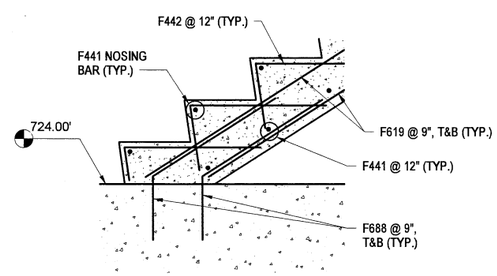

4 / S-323 4TH STREET EGRESS STAIRWAY BOTTOM LANDING
SCALE: 1" = 1'-0"

PROJECT NO. P-5705BB
MECKLENBURG COUNTY

PROJECT NO. 19+68.93 -S1-

SHEET 4 OF 4

NORTH CAROLINA PROFESSIONAL SEAL 045044 ENGINEER CHRISTOPHER PARK
5/2/2018
DocuSigned by: Christopher Park
D380CEE82E504BD...

DOCUMENT NOT CONSIDERED
FINAL UNLESS ALL
SIGNATURES COMPLETED

HNTB NORTH CAROLINA, P.C.
NC License No. C-1554
343 E. Six Forks Rd., Suite 200, Raleigh, N.C. 27609

DRAWN BY D TRACZYKIEWICZ DATE 3/27/2018
CHECKED BY C PARK DATE 3/27/2018
DWG. NO. 47

STATE OF NORTH CAROLINA
DEPARTMENT OF TRANSPORTATION
RALEIGH

CONCRETE SECTIONS AND DETAILS

REVISIONS						SHEET NO.
NO.	BY	DATE	NO.	BY	DATE	S-323
1	CP	5/2/18	3			TOTAL SHEETS
2			4			98

DocuSign Envelope ID: 055A6E04-C229-4A1B-B3E1-73E7C2215256

0012DEL_P28
1001ADD_P28

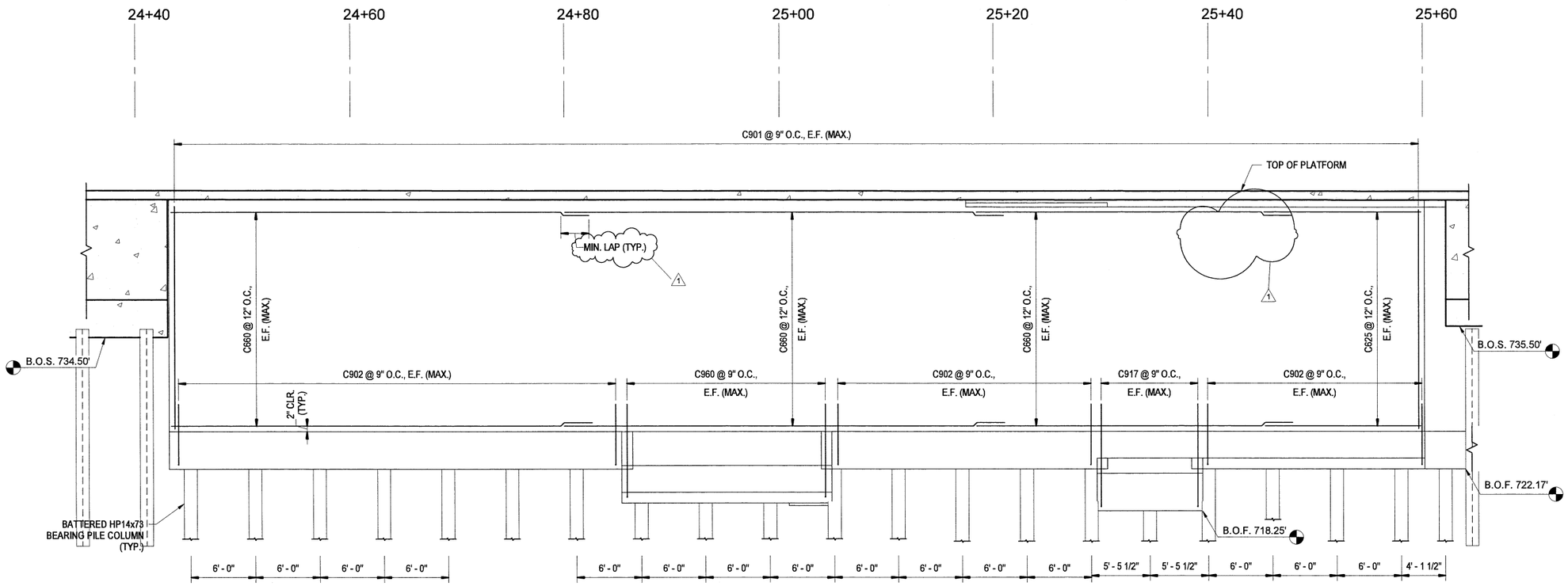

1 / S-330 CONCOURSE WEST WALL ELEVATION
SCALE: 3/16" = 1'-0"

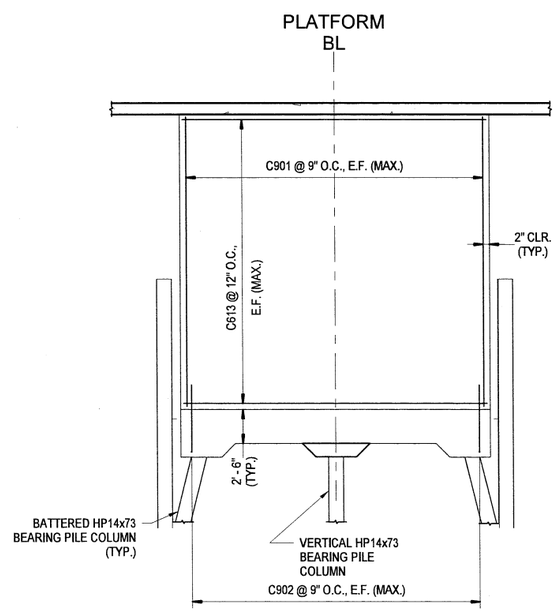

2 / S-330 CONCOURSE NORTH WALL ELEVATION
SCALE: 3/16" = 1'-0"

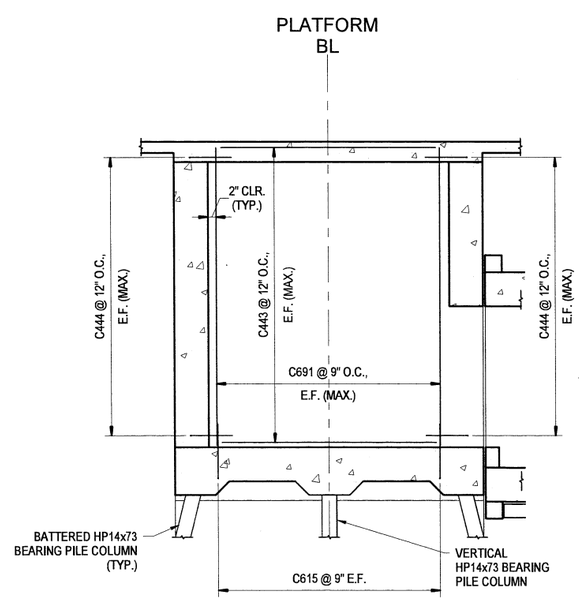

3 / S-330 ELEVATOR PARTITION WALL ELEVATION
SCALE: 3/16" = 1'-0"

PROJECT NO. P-5705BB
MECKLENBURG COUNTY
PROJECT NO. 19+68.93 -S1-

NORTH CAROLINA PROFESSIONAL SEAL 045044 ENGINEER CHRISTOPHER PARK
DocuSigned by: Christopher Park
5/2/2018

DOCUMENT NOT CONSIDERED FINAL UNLESS ALL SIGNATURES COMPLETED

HNTB NORTH CAROLINA, P.C.
NC License No. C-1554
343 E. Six Forks Rd., Suite 200, Raleigh, N.C. 27609

DRAWN BY D TRACZYKIEWICZ DATE 3/27/2018
CHECKED BY C PARK DATE 3/27/2018
DWG. NO. 48

STATE OF NORTH CAROLINA
DEPARTMENT OF TRANSPORTATION
RALEIGH

REINFORCEMENT ELEVATION - CONCOURSE WEST & NORTH WALL

REVISIONS						SHEET NO.
NO.	BY	DATE	NO.	BY	DATE	S-330
1	CP	5/2/18	3			TOTAL SHEETS
2			4			98

DocuSign Envelope ID: 055A6E04-C229-4A1B-B3E1-73E7C2215256

0012DEL_P28
1001ADD_P28

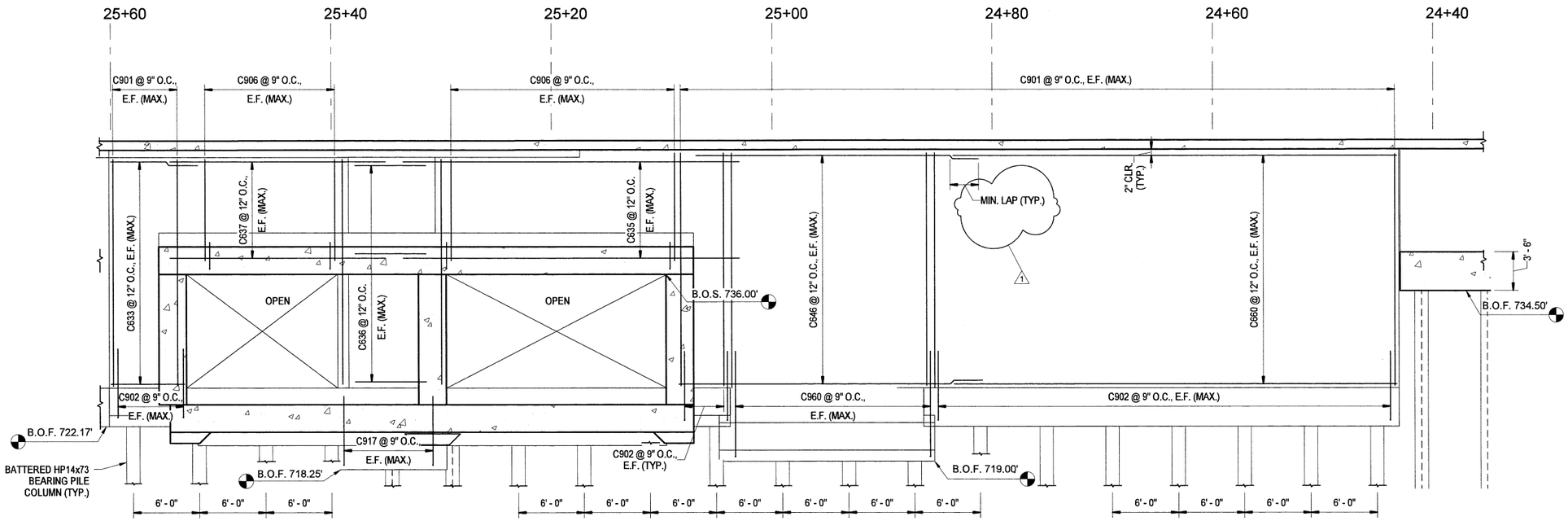

1 S-331 CONCOURSE EAST WALL ELEVATION
SCALE: 3/16" = 1'-0"

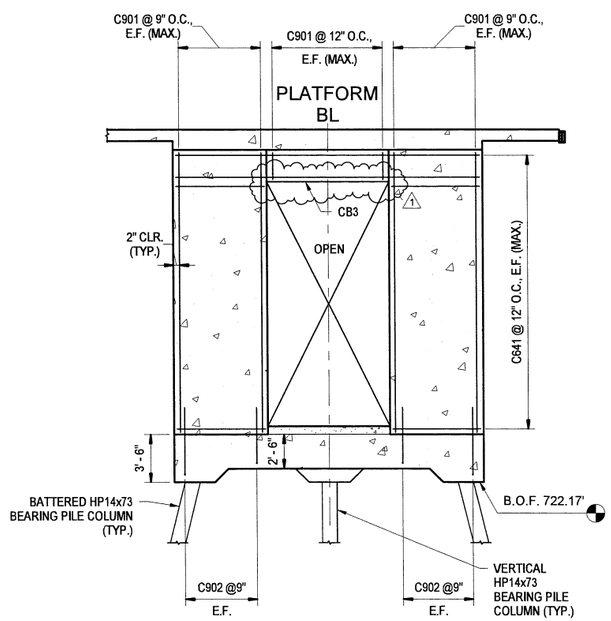

2 S-331 CONCOURSE SOUTH WALL ELEVATION
SCALE: 3/16" = 1'-0"

PROJECT NO. P-5705BB
MECKLENBURG COUNTY
PROJECT NO. 19+68.93 -S1-

NORTH CAROLINA PROFESSIONAL SEAL 045044 ENGINEER CHRISTOPHER PARK
DocuSigned by: Christopher Park
5/2/2018

DOCUMENT NOT CONSIDERED FINAL UNLESS ALL SIGNATURES COMPLETED

HNTB NORTH CAROLINA, P.C.
NC License No. C-1554
343 E. Six Forks Rd., Suite 200, Raleigh, N.C. 27609

DRAWN BY D TRACZYKIEWICZ DATE 3/27/2018
CHECKED BY C PARK DATE 3/27/2018
DWG. NO. 49

STATE OF NORTH CAROLINA
DEPARTMENT OF TRANSPORTATION
RALEIGH

REINFORCEMENT ELEVATION – CONCOURSE EAST & SOUTH WALL

REVISIONS						SHEET NO.
NO.	BY	DATE	NO.	BY	DATE	S-331
1	CP	5/2/18	3			TOTAL SHEETS
2			4			98

DocuSign Envelope ID: 055A6E04-C229-4A1B-B3E1-73E7C2215256

0012DEL_P28
1001ADD_P28

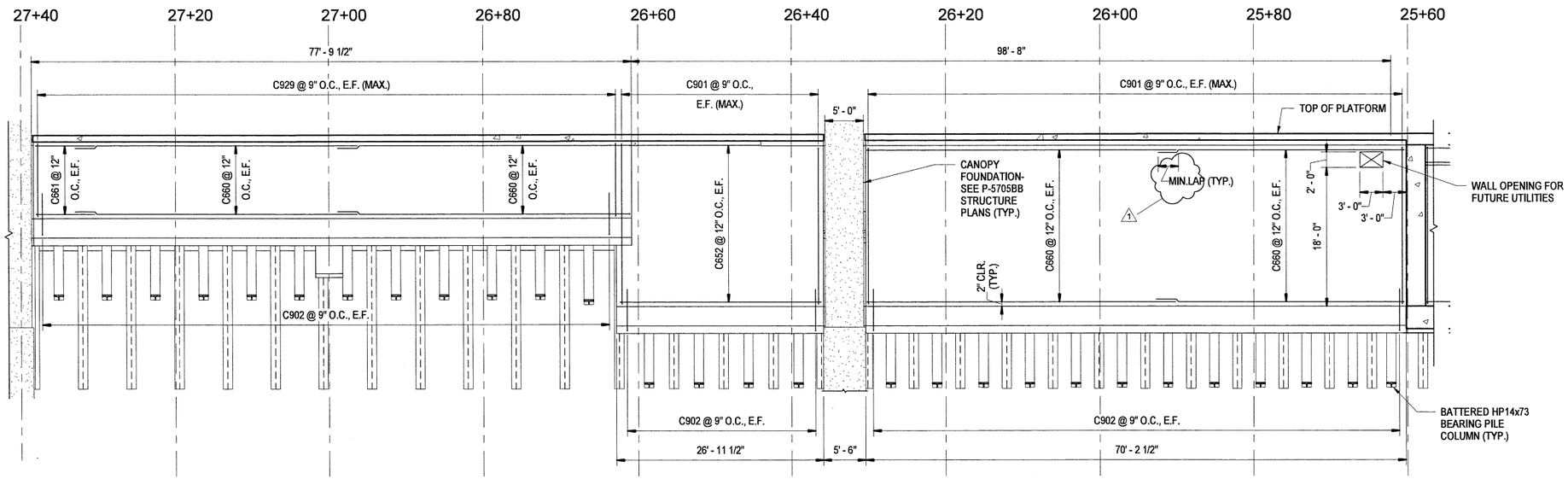

1 / S-333 BAGGAGE RAMP EAST ELEVATION
SCALE: 1/8" = 1'-0"

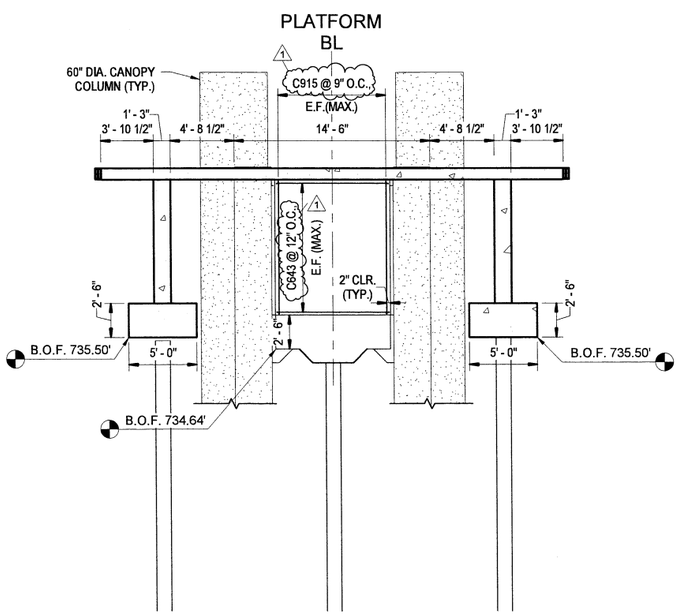

2 / S-333 BAGGAGE RAMP SOUTH ELEVATION
SCALE: 3/16" = 1'-0"

PROJECT NO. P-5705BB
MECKLENBURG COUNTY
PROJECT NO. 19+68.93 -S1-

NORTH CAROLINA PROFESSIONAL SEAL 045044 ENGINEER CHRISTOPHER PARK
DocuSigned by: Christopher Park
5/2/2018

DOCUMENT NOT CONSIDERED FINAL UNLESS ALL SIGNATURES COMPLETED

HNTB NORTH CAROLINA, P.C.
NC License No. C-1554
343 E. Six Forks Rd., Suite 200, Raleigh, N.C. 27609

DRAWN BY D TRACZYKIEWICZ DATE 3/27/2018
CHECKED BY C PARK DATE 3/27/2018
DWG. NO. 51

STATE OF NORTH CAROLINA
DEPARTMENT OF TRANSPORTATION
RALEIGH

REINFORCEMENT ELEVATION – BAGGAGE RAMP EAST & SOUTH

REVISIONS						
NO.	BY	DATE	NO.	BY	DATE	
1	CP	5/2/18	3			
2			4			

SHEET NO. S-333
TOTAL SHEETS 98

DocuSign Envelope ID: 055A6E04-C229-4A1B-B3E1-73E7C2215256

0012DEL_P28
1001ADD_P28

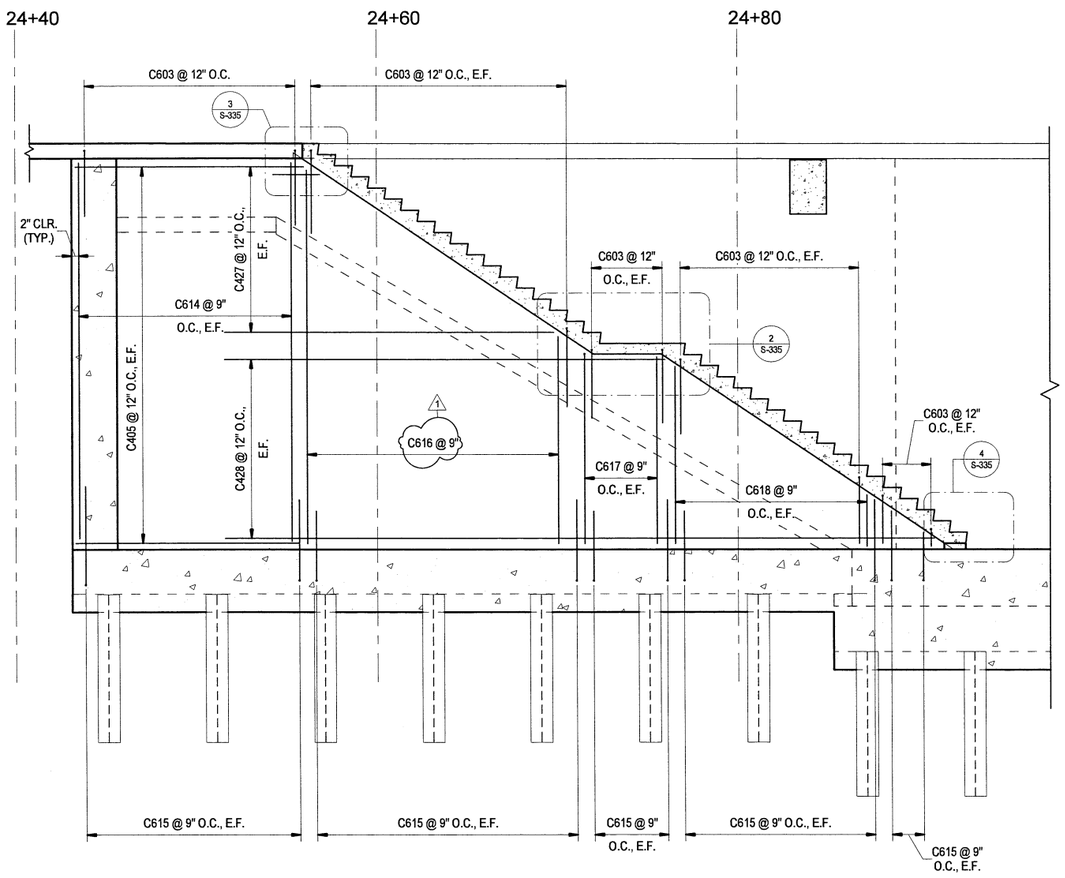

1 S-335 CONCOURSE STAIRWAY REINFORCING
SCALE: 1/4" = 1'-0"

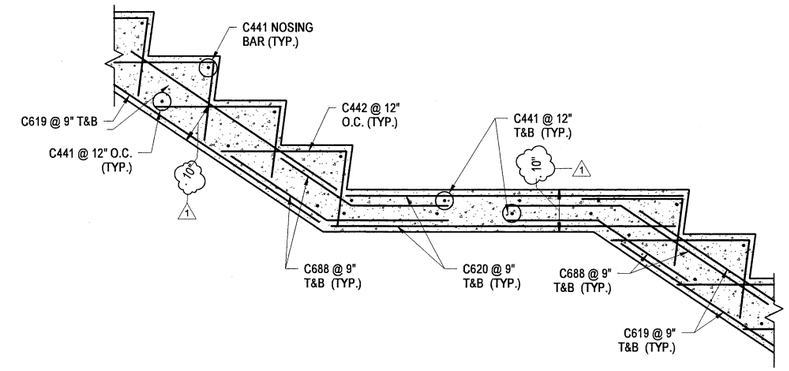

2 S-335 CONCOURSE STAIRWAY
SCALE: 1" = 1'-0"

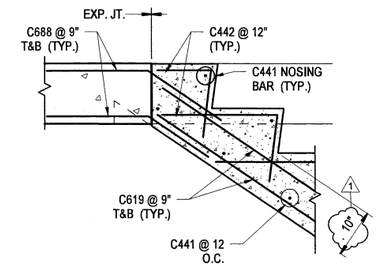

3 S-335 CONCOURSE STAIRWAY TOP LANDING
SCALE: 1" = 1'-0"

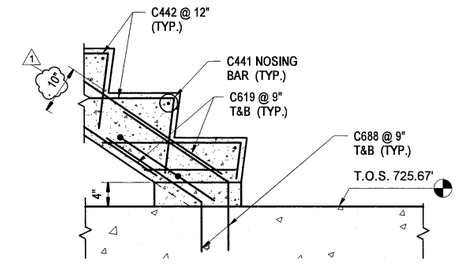

4 S-335 CONCOURSE STAIRWAY BOTTOM LANDING
SCALE: 1" = 1'-0"

PROJECT NO. P-5705BB
MECKLENBURG COUNTY

PROJECT NO. 19+68.93 -S1-

NORTH CAROLINA PROFESSIONAL SEAL 045044 ENGINEER CHRISTOPHER PARK
5/2/2018
DocuSigned by: Christopher Park
D380CEE81E5C4BD...

DOCUMENT NOT CONSIDERED FINAL UNLESS ALL SIGNATURES COMPLETED

HNTB NORTH CAROLINA, P.C.
NC License No. C-1554
343 E. Six Forks Rd., Suite 200, Raleigh, N.C. 27609

DRAWN BY D TRACZYKIEWICZ DATE 3/27/2018
CHECKED BY C PARK DATE 3/27/2018
DWG. NO. 53

STATE OF NORTH CAROLINA
DEPARTMENT OF TRANSPORTATION
RALEIGH

REINFORCEMENT ELEVATION – CONCOURSE STAIRS

REVISIONS						SHEET NO.
NO.	BY	DATE	NO.	BY	DATE	S-335
1	CP	5/2/18	3			TOTAL SHEETS
2			4			98

DocuSign Envelope ID: CA3FA972-10BC-43FA-B248-83FF456CBBE1

0012DEL_P28
1001ADD_P28

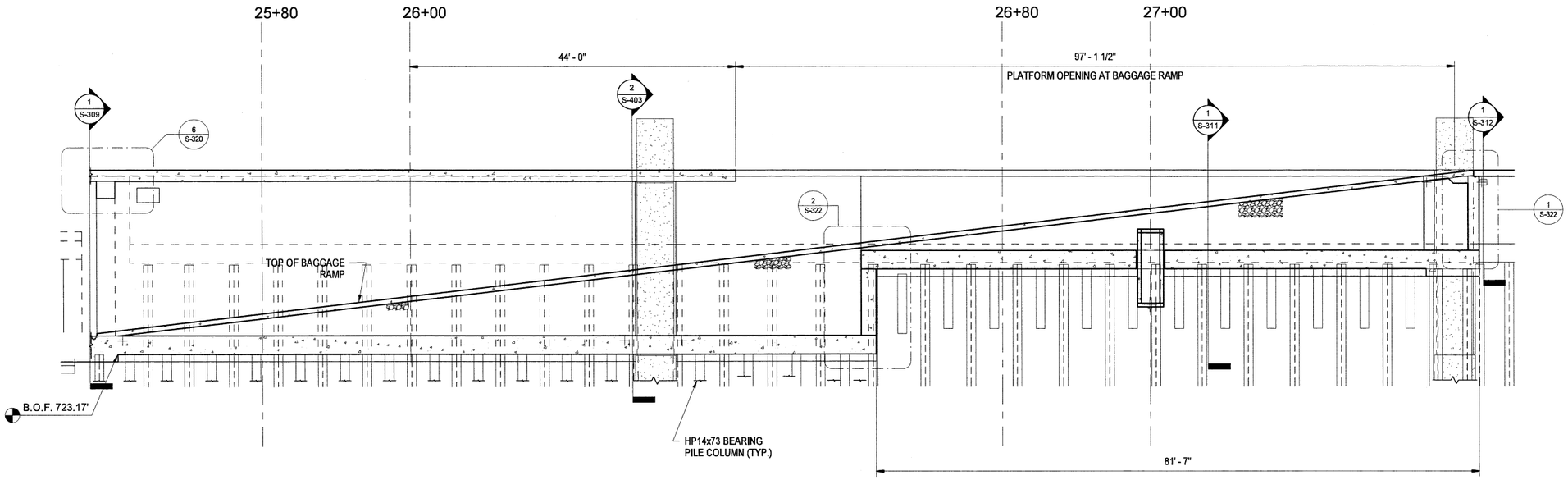

1 S-402 BAGGAGE RAMP WALL ELEVATION - 1
SCALE: 1/8" = 1'-0"

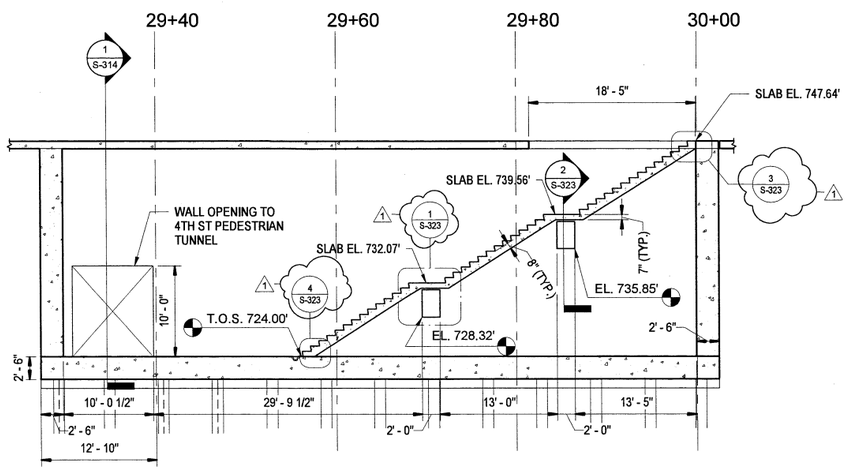

2 S-402 4TH STREET EGRESS STAIR LONGITUDINAL SECTION
SCALE: 1/8" = 1'-0"

PROJECT NO. P-5705BB
MECKLENBURG COUNTY
PROJECT NO. 19+68.93 -S1-

NORTH CAROLINA PROFESSIONAL SEAL 045044 ENGINEER CHRISTOPHER PARK
DocuSigned by: Christopher Park
5/2/2018

DOCUMENT NOT CONSIDERED FINAL UNLESS ALL SIGNATURES COMPLETED

STATE OF NORTH CAROLINA
DEPARTMENT OF TRANSPORTATION
RALEIGH

LONGITUDINAL SECTION - BAGGAGE RAMP

HNTB NORTH CAROLINA, P.C.
NC License No. C-1554
343 E. Six Forks Rd., Suite 200, Raleigh, N.C. 27609

DRAWN BY D TRACZYKIEWICZ DATE 3/27/2018
CHECKED BY C PARK DATE 3/27/2018
DWG. NO. 65

REVISIONS					
NO.	BY	DATE	NO.	BY	DATE
1	CP	5/2/18	3		
2			4		

SHEET NO. S-402
TOTAL SHEETS 98

DocuSign Envelope ID: CA3FA972-10BC-43FA-B248-93FF456CBBE1

0012DEL_P28
1001ADD_P28

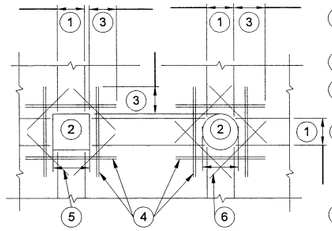

1. REINFORCEMENT INTERRUPTED BY OPENING.
2. OPENING AS REQUIRED.
3. CLASS B MIN LAP SPLICE LENGTH, RE: SCHEDULE
4. PROVIDE BARS WITH AREA EQUAL TO INTERRUPTED REINFORCEMENT. PLACE 1/2 ON EACH SIDE OF OPENING AT 3" MAXIMUM SPACING.
5. PROVIDE (1) #5 x 5'-0" x 4'-0" DIAGONAL BAR AT EACH LAYER OF REINFORCEMENT.
6. PROVIDE (1) #5 x 5'-0" DIAGONAL BAR ON 4 SIDES FOR EACH LAYER OF REINFORCEMENT. OMIT FOR OPENING DIAMETER < 12" AT ROUND OPENINGS ONLY.

1 / S-501 PENETRATION DETAIL

TYPICAL PENETRATION /ENCASEMENT DETAIL

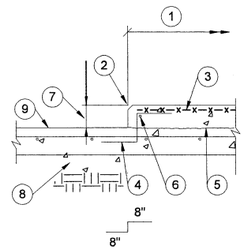

1. PAD SIZE: 1'-0" EACH WAY LARGER THAN EQUIPMENT BASE OR SEE PLAN FOR SIZE.
2. CHAMFER ALL SIDES 3/4" TYP.
3. 6x6-W1.4xW1.4 WWF, 1" CLEAR OF TOP.
4. #3 TIE AT 12"oc AROUND PERIMETER AND ALL OPENINGS.
5. CONSTRUCTION JOINT, ROUGHEN SURFACE TO 1/4 AMPLITUDE AND APPLY BONDING AGENT.
6. #3 CONT AROUND PERIMETER.
7. 3 1/2" TYPICAL UNLESS NOTED OTHERWISE ON PLAN.
8. SEE GENERAL NOTES FOR UNDERSLAB REQUIREMENTS.
9. SLAB ON GRADE AND REINFORCING, RE: PLAN.

2 / S-501 EQUIP PAD

EQUIP PAD ON SLAB ON GRADE

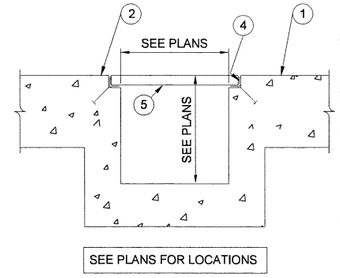

1. ELEVATOR PIT SLAB THICKNESS, RE: PLAN.
2. SEE PLAN FOR ELEVATION.
3. REFERENCE M/E/P AND ARCHITECTURAL DRAWINGS FOR BLOCKOUTS.
4. L2x2x3/16 AT FOUR CORNERS W/ 1/2"Øx4" STUDS AT 12"oc, GALV.
5. GRATE.

3 / S-501 SUMP PIT

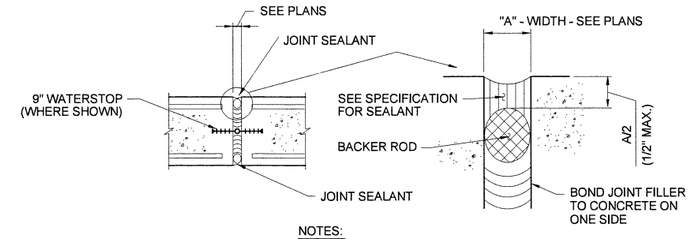

NOTES:
BACKER ROD AND JOINT SEALANT AT BOTTOM OF SLAB GRADE NOT REQUIRED

4 / S-501 EXPANSION JOINT DETAIL

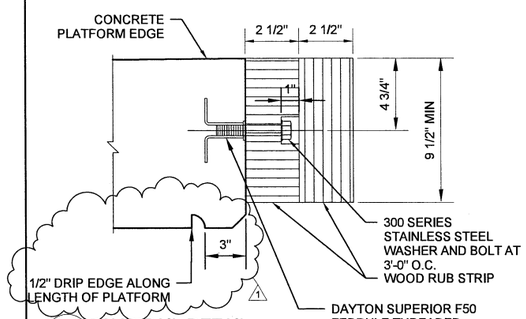

5 / S-501 RUB RAIL DETAIL

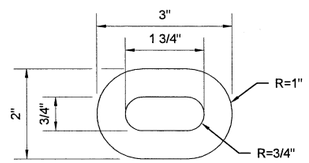

PLATFORM RUBBING EDGE NOTES:

1. (1) OF EACH TYPE OF EDGE SECTION WILL COVER FULL WIDTH OF EACH PLATFORM SECTION.
2. ATTACHMENT SHALL BE THROUGH SLOTTED HOLE IN RUBBING EDGE AND INTO A THREADED LOOP FERRULE INSERT CAST INTO THE PLATFORM.
3. COEFFICIENTS OF THERMAL EXPANSION MAY DIFFER WITH MANUFACTURES. TRIM EDGES AS REQUIRED DURING INSTALLATION.
4. INSTALL WITH SCARIFIED EDGE AT TOP OF PLATFORM FOR ADA COMPLIANCE.

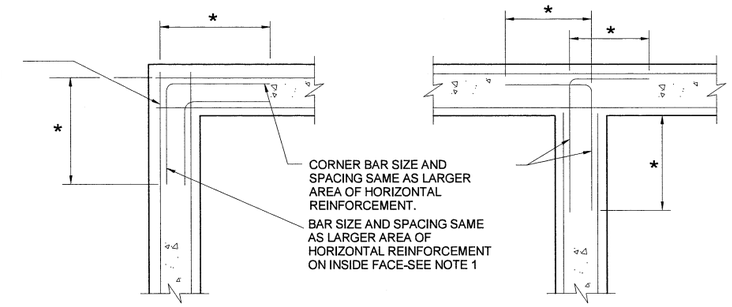

6 / S-501 HORIZONTAL CORNER BAR DETAIL

NOTES:

1. REQUIRED ONLY WHERE WALLS ARE SUBJECT TO FLUID PRESSURE FROM INSIDE.
2. - * CLASS B MIN LAP SPLICE LEMATH, RE: SCHEDULE

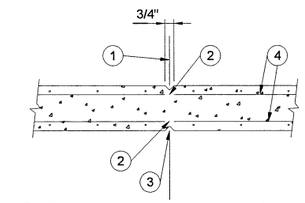

1. CENTERLINE CONTROL JOINT. RE: GENERAL NOTES FOR MAXIMUM SPACING.
2. CUT EVERY OTHER HORIZONTAL BAR AT JOINT CENTERLINE. BOTH FACES, AND CENTERED REINFORCING.
3. RUSTICATION JOINT AT EACH FACE. COORDINATE LOCATION.
4. HORIZONTAL REINFORCING BARS.

NOTE: THIS DETAIL WILL NOT BE CONSIDERED A CONTROL JOINT UNLESS HORIZONTAL BARS ARE CUT AS INDICATED ABOVE.

TYPICAL WALL CONTROL JOINT

7 / S-501 WALL CONTROL JOINT

SCALE: 12" = 1'-0"

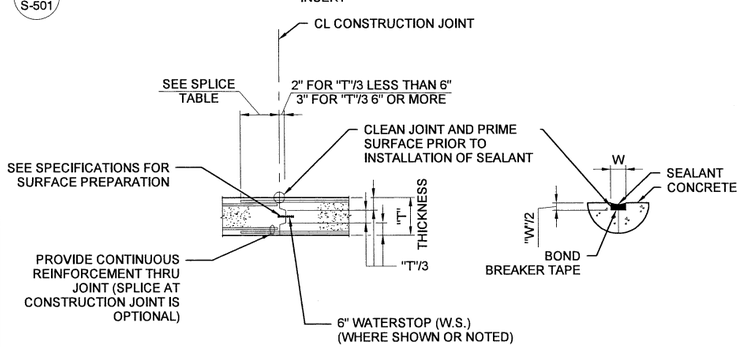

NOTE:
WHERE "T" EXCEEDS 2'-0" SEE SECTIONS

8 / S-501 CONST JOINT DETAIL - WALLS & SLABS

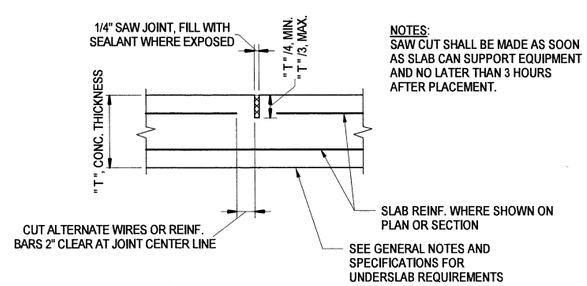

NOTES:
SAW CUT SHALL BE MADE AS SOON AS SLAB CAN SUPPORT EQUIPMENT AND NO LATER THAN 3 HOURS AFTER PLACEMENT.

9 / S-501 SLAB CONTROL JOINT

SCALE: 1 1/2" = 1'-0"

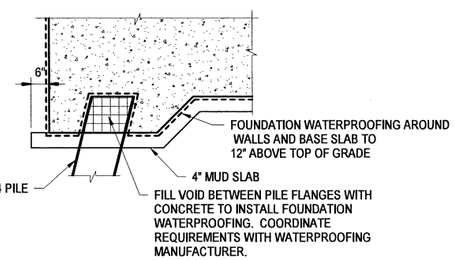

10 / S-501 TYPICAL FOUNDATION WATERPROOFING DETAIL

SCALE: 1/2" = 1'-0"

PROJECT NO. P-5705BB
MECKLENBURG COUNTY
PROJECT NO. 19+68.93 -S1-

EPOXY COATED REINFORCEMENT SPLICE LENGTH	
BAR SIZE	SPLICE LENGTH
#4	2'-0"
#5	2'-4"
#6	3'-0"
#7	4'-4"
#8	5'-0"
#9	6'-2"

11 / S-501 REBAR SPLICE LENGTH TABLE

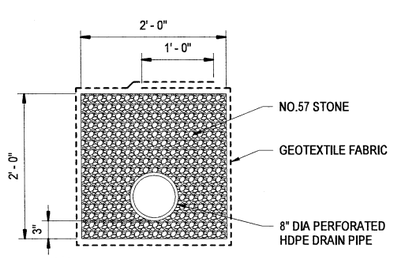

12 / S-501 UNDERDRAIN DETAIL

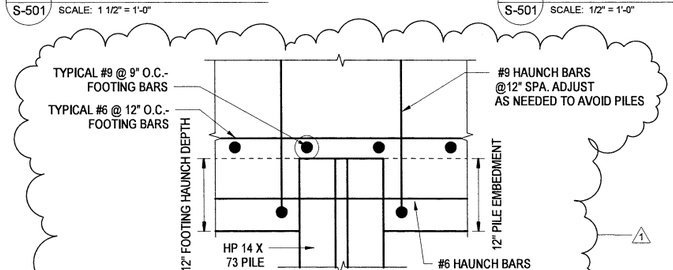

13 / S-501 TYPICAL REINFORCEMENT AT PILE DETAIL

SCALE: 1" = 1'-0"

NORTH CAROLINA PROFESSIONAL SEAL 045044 ENGINEER CHRISTOPHER PARK
DocuSigned by: Christopher Park
5/2/2018

DOCUMENT NOT CONSIDERED FINAL UNLESS ALL SIGNATURES COMPLETED

HNTB NORTH CAROLINA, P.C.
NC License No. C-1554
343 E. Six Forks Rd., Suite 200, Raleigh, N.C. 27609

DRAWN BY D TRACZYKIEWICZ DATE 3/27/2018
CHECKED BY C PARK DATE 3/27/2018
DWG. NO. 69

STATE OF NORTH CAROLINA
DEPARTMENT OF TRANSPORTATION
RALEIGH

TYPICAL DETAILS

REVISIONS						SHEET NO.
NO.	BY	DATE	NO.	BY	DATE	S-501
1	CP	5/2/18	3			TOTAL SHEETS
2			4			98

DocuSign Envelope ID: CA3FA972-10BC-43FA-B248-93FF456CBBE1

0012DEL_P28
1001ADD_P28

4TH STREET EGRESS REINFORCEMENT SCHEDULE

MARK	NO.	SIZE	TYPE	LENGTH	WEIGHT (LBS)	A	B	C	D	E	J	REMARKS
F425	11	#4	11	5' - 1/2"	37	2' - 1"	2' - 7"	0' - 4 1/2"				
F930	24	#4	11	4' - 6 1/2"	73	1' - 7"	2' - 7"	0' - 4 1/2"				
F441	118	#4	STR	4' - 7"	361							
F442	216	#4	2	2' - 6"	361	2' - 0"	1' - 6"	0' - 2"				
F603	174	#6	8	3' - 4 3/4"	886	2' - 4 3/4"	1' - 0"					
F615	40	#6	8	6' - 5 1/4"	386	5' - 5 1/4"	1' - 0"					
F619	32	#6	STR	16' - 8"	801							
F620	16	#6	STR	3' - 8"	88							
F623	20	#6	STR	7' - 8"	230							
F635	6	#6	STR	15' - 10 1/2"	143							
F660	124	#6	STR	40' - 0"	7450							
F688	64	#6	2	8' - 4 1/4"	564	2' - 11 1/8"	2' - 11 1/8"	2' - 5 3/4"				
F692	48	#6	STR	38' - 0"	2740							
F693	48	#6	STR	26' - 0"	1874							
F694	28	#6	STR	15' - 10 1/2"	667							
F695	48	#6	STR	3' - 2"	228							
F696	28	#6	STR	38' - 0"	1598							
F902	424	#9	8	10' - 3 1/4"	14793	8' - 8 1/4"	1' - 7"					
E903	384	#9	STR	22' - 7 1/2"	29553							

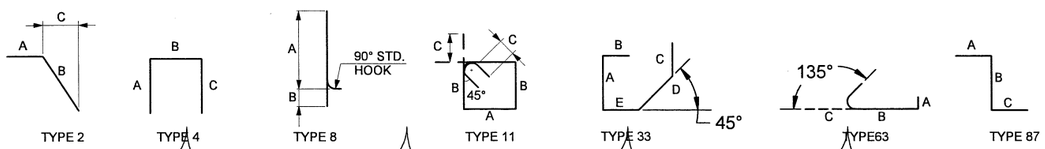

PLATFORM WALL AND FOOTING REINFORCEMENT SCHEDULE

MARK	NO.	SIZE	TYPE	LENGTH	WEIGHT (LBS)	A	B	C	D	E	J	REMARKS
P402	624	#4	11	4' - 6 2/4"	1893	1' - 7"	2' - 7"	0' - 4 8/16"				
P415	44	#4	STR	13' - 0"	382							
P420	44	#4	STR	19' - 0"	558							
P425	418	#4	11	3' - 8 2/4"	1035	2' - 7"	0' - 9"	0' - 4 8/16"				
P426	836	#4	11	2' - 6 2/4"	1419	0' - 8"	1' - 6"	0' - 4 8/16"				
P440	528	#4	STR	40' - 0"	14108							
P601	2612	#6	STR	9' - 2"	35963							
P602	1960	#6	8	3' - 11 1/4"	11577	2' - 11 3/16"	1' - 0"					
P603	2612	#6	8	5' - 5 1/4"	21313	4' - 5 3/16"	1' - 0"					
P605	240	#6	STR	24' - 8"	8892							
P606	240	#6	8	4' - 8 1/4"	1688	3' - 8 3/16"	1' - 0"					
P607	4	#6	STR	26' - 0"	156							
P608	6	#6	STR	13' - 0"	117							
P609	4	#6	STR	6' - 0"	36							
P620	24	#6	STR	18' - 0"	649							
P630	24	#6	STR	26' - 0"	937							
P660	330	#6	STR	40' - 0"	19826							
P901	240	#9	STR	24' - 8"	20128							
P902	240	#9	8	8' - 6 1/4"	6945	6' - 11 2/16"	1' - 7"					
P903	6	#9	STR	16' - 0"	326							
P904	2612	#9	STR	4' - 8"	41444							
P905	10	#9	STR	15' - 0"	510							
P906	10	#9	STR	13' - 0"	442							
P940	106	#9	STR	40' - 0"	14416							

PROJECT NO. P-5705BB
MECKLENBURG COUNTY

PROJECT NO. 19+68.93 -S1-

SHEET 2 OF 4

NORTH CAROLINA PROFESSIONAL SEAL 045044 ENGINEER CHRISTOPHER PARK
5/2/2018
DocuSigned by: Christopher Park
D080CEE8E5E048D...

DOCUMENT NOT CONSIDERED FINAL UNLESS ALL SIGNATURES COMPLETED

HNTB NORTH CAROLINA, P.C.
NC License No. C-1554
343 E. Six Forks Rd., Suite 200, Raleigh, N.C. 27609

DRAWN BY D TRACZYKIEWICZ DATE 3/27/2018
CHECKED BY C PARK DATE 3/27/2018
DWG. NO. 73

STATE OF NORTH CAROLINA
DEPARTMENT OF TRANSPORTATION
RALEIGH

REINFORCEMENT SCHEDULE

REVISIONS						SHEET NO.
NO.	BY	DATE	NO.	BY	DATE	S-651
1	CP	5/2/18	3			TOTAL SHEETS
2			4			98

DocuSign Envelope ID: CA3FA972-10BC-43FA-B246-93FF456CBBE1

0012DEL_P28
1001ADD_P28

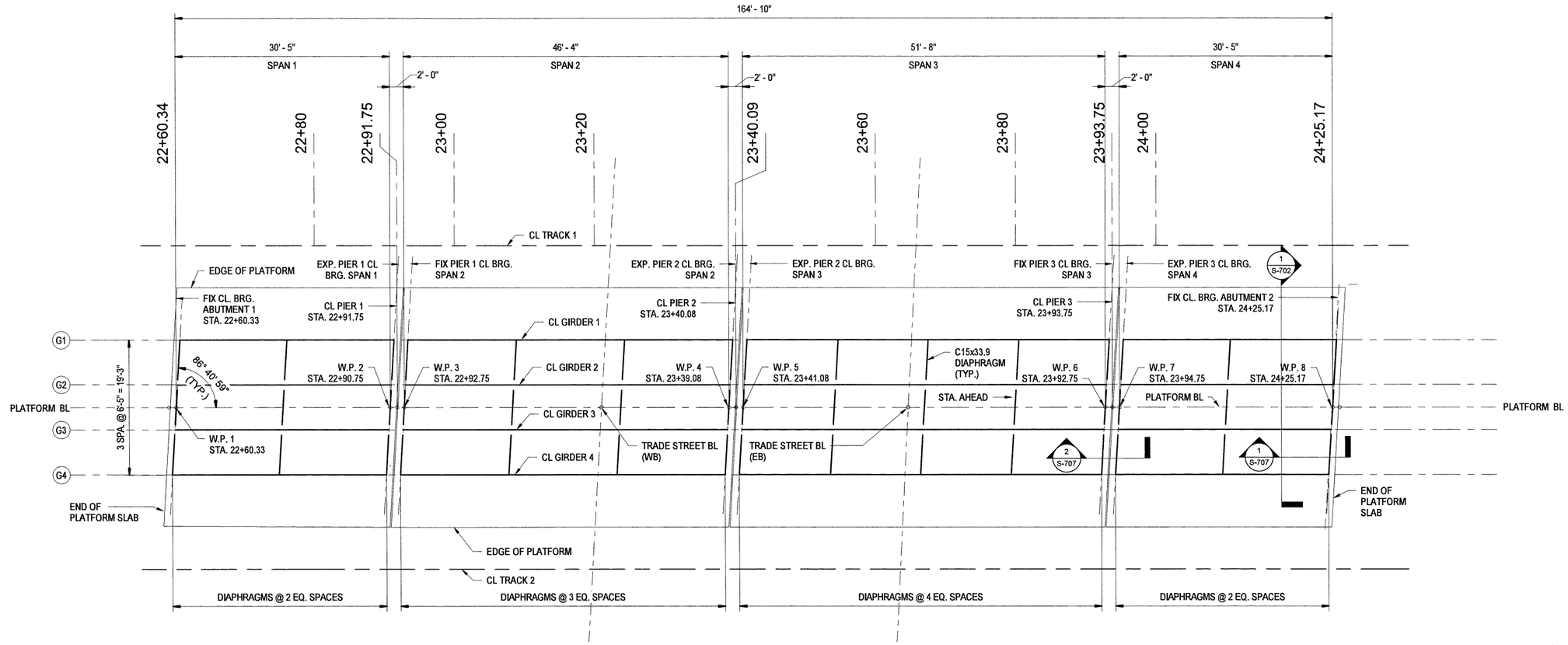

1 / S-701 TRADE STREET STEEL FRAMING PLAN
SCALE: 1/8" = 1'-0"

NOTES:
1. LENGTHS TAKEN ALONG CL GIRDER.
2. GIRDER ANGLE MEASURED FROM PLATFORM BL TO CL BRG.

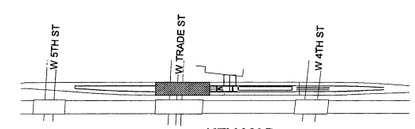

KEY MAP
SCALE: NTS

GIRDER SCHEDULE

SPAN	GIRDER NO.	LENGTH C-C BRG.	SECTION
1	1	30'-5"	W30x90
1	2	30'-5"	W30x90
1	3	30'-5"	W30x90
1	4	30'-5"	W30x90
2	1	46'-4"	W30x99
2	2	46'-4"	W30x99
2	3	46'-4"	W30x99
2	4	46'-4"	W30x99
3	1	51'-8"	W30x99
3	2	51'-8"	W30x99
3	3	51'-8"	W30x99
3	4	51'-8"	W30x99
4	1	30'-5"	W30x90
4	2	30'-5"	W30x90
4	3	30'-5"	W30x90
4	4	30'-5"	W30x90

WORK POINTS

	WORKING POINT	COORDINATES		PLATFORM BL STATION
		NORTH	EAST	STATION
CL BRG. ABUTMENT 1	W.P. #1	544429.7932	1448175.9610	22+60.33
CL BRG. PIER 1	W.P. #2	544408.0427	1448154.7797	22+90.75
CL BRG. PIER 1	W.P. #3	544406.5024	1448153.2797	22+92.75
CL BRG. PIER 2	W.P. #4	544373.4325	1448021.0753	23+39.08
CL BRG. PIER 2	W.P. #5	544371.8778	1448119.5613	23+41.08
CL BRG. PIER 3	W.P. #6	544334.9822	1448083.6314	23+92.75
CL BRG. PIER 3	W.P. #7	544333.4276	1448082.1174	23+94.75
CL BRG. ABUTMENT 2	W.P. #8	544211.6986	1448060.9571	24+25.17

PROJECT NO. P-5705BB
MECKLENBURG COUNTY
PROJECT NO. 19+68.93 -S1-

NORTH CAROLINA PROFESSIONAL SEAL 045044 ENGINEER CHRISTOPHER PARK
DocuSigned by: Christopher Park
5/2/2018

DOCUMENT NOT CONSIDERED FINAL UNLESS ALL SIGNATURES COMPLETED

HNTB NORTH CAROLINA, P.C.
NC License No. C-1554
343 E. Six Forks Rd., Suite 200, Raleigh, N.C. 27609

DRAWN BY D TRACZYKIEWICZ DATE 3/27/2018
CHECKED BY C PARK DATE 3/27/2018
DWG. NO. 76

STATE OF NORTH CAROLINA
DEPARTMENT OF TRANSPORTATION
RALEIGH

TRADE STREET STEEL FRAMING PLAN

REVISIONS						
NO.	BY	DATE	NO.	BY	DATE	
1	CP	5/2/18	3			
2			4			

SHEET NO. S-701
TOTAL SHEETS 98

DocuSign Envelope ID: CA3FA972-10BC-43FA-B248-93FF456CBBE1

0012DEL_P28
1001ADD_P28

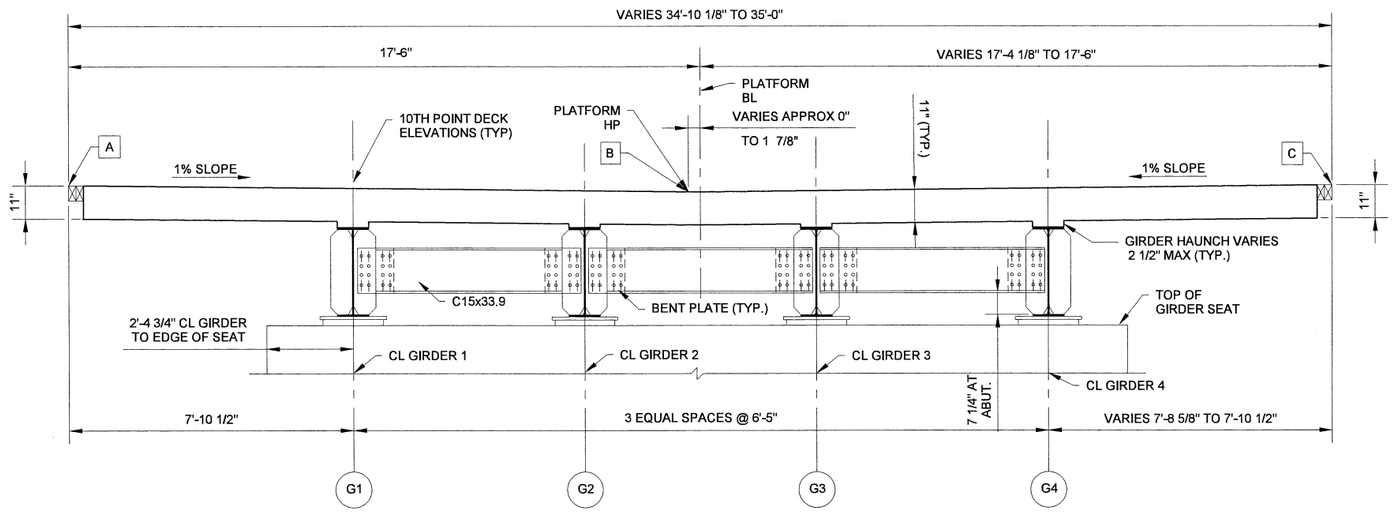

1 / S-702 TRADE STREET TYPICAL SECTION
SCALE: 1/2" = 1'-0"

NOTES:
1. A, B, C DENOTE TOP OF SLAB ELEVATION.
2. SECTION VIEW IS SHOWN LOOKING STATIONS AHEAD.

TRADE STREET TOP OF DECK ELEVATION			
STATION	PT A	PT B	PT C
22+59.33	–	–	748.329
22+60.00	748.329	748.155	748.328
22+60.34	–	748.153	–
22+61.35	748.328	–	–
22+70.00	748.321	748.147	748.320
22+80.00	748.313	748.138	748.312
22+89.74	–	–	748.304
22+90.00	748.305	748.130	748.304
22+90.75	–	748.128	–
22+91.74	–	–	748.303
22+91.76	748.303	–	–
22+92.75	–	748.127	–
22+93.77	748.302	–	–
23+00.00	748.297	748.122	748.296
23+10.00	748.289	748.114	748.288
23+20.00	748.281	748.106	748.280
23+30.00	748.273	748.098	748.272
23+38.07	–	–	748.266
23+39.08	–	748.090	–
23+40.00	748.265	748.090	748.264

TRADE STREET TOP OF DECK ELEVATION			
STATION	PT A	PT B	PT C
23+40.07	–	–	748.264
23+40.10	748.265	–	–
23+41.09	–	748.088	–
23+42.10	748.263	–	–
23+50.00	748.257	748.082	748.256
23+60.00	748.249	748.074	748.248
23+70.00	748.241	748.066	748.240
23+80.00	748.233	748.058	748.232
23+90.00	748.225	748.050	748.224
23+91.74	–	–	748.223
23+92.75	–	748.046	–
23+93.74	–	–	748.221
23+93.76	748.222	–	–
23+94.75	–	748.045	–
23+95.31	748.220	–	–
24+00.00	748.217	748.042	748.216
24+10.00	748.209	748.034	748.209
24+20.00	748.201	748.026	748.201
24+24.15	–	–	748.197
24+25.16	–	748.022	–
24+26.18	748.196	–	–

TABLE OF GIRDER SEAT ELEVATIONS					
LOCATION		GIRDER NUMBER			
		1	2	3	4
SPAN 1	CL BRG. ABUT. 1	744.466	744.466	744.466	744.466
	CL BRG. PIER 1	744.424	744.424	744.424	744.424
SPAN 2	CL BRG. PIER 1	744.424	744.424	744.424	744.424
	CL BRG. PIER 2	744.386	744.386	744.386	744.386
SPAN 3	CL BRG. PIER 2	744.386	744.386	744.386	744.386
	CL BRG. PIER 3	744.344	744.344	744.344	744.344
SPAN 4	CL BRG. PIER 3	744.344	744.344	744.344	744.344
	CL BRG. ABUT. 2	744.334	744.334	744.334	744.334

PROJECT NO. P-5705BB
MECKLENBURG COUNTY
PROJECT NO. 19+68.93 -S1-

NORTH CAROLINA PROFESSIONAL SEAL 045044 ENGINEER CHRISTOPHER PARK
5/2/2018
DocuSigned by: Christopher Park
D380CEE83E504BD...

DOCUMENT NOT CONSIDERED FINAL UNLESS ALL SIGNATURES COMPLETED

HNTB NORTH CAROLINA, P.C.
NC License No. C-1554
343 E. Six Forks Rd., Suite 200, Raleigh, N.C. 27609

DRAWN BY D TRACZYKIEWICZ DATE 3/27/2018
CHECKED BY C PARK DATE 3/27/2018
DWG. NO. 77

STATE OF NORTH CAROLINA
DEPARTMENT OF TRANSPORTATION
RALEIGH

TRADE STREET TYPICAL SECTION ONLY AT ABUTMENTS & PLATFORM SLAB ELEVATIONS

REVISIONS						
NO.	BY	DATE	NO.	BY	DATE	
1	CP	5/2/18	3			
2			4			

SHEET NO. S-702
TOTAL SHEETS 98

DocuSign Envelope ID: CA3FA972-10BC-43FA-B248-83FF456CBBE1

0012DEL_P28
1001ADD_P28

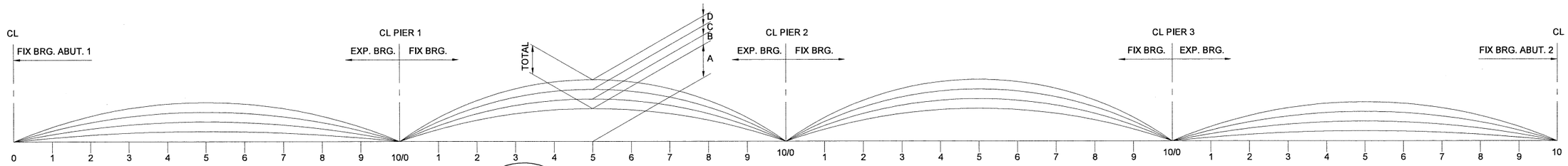

1 S-709 TRADE ST CAMBER DIAGRAM
SCALE: 3/4" = 1'-0"

GIRDER NO.	DEFLECTIONS	SPAN 1											SPAN 2										
G1		0.0 L	0.1 L	0.2 L	0.3 L	0.4 L	0.5 L	0.6 L	0.7 L	0.8 L	0.9 L	1.0 L	0.0 L	0.1 L	0.2 L	0.3 L	0.4 L	0.5 L	0.6 L	0.7 L	0.8 L	0.9 L	1.0 L
	A	0.00	0.00	0.00	0.00	0.00	0.00	0.00	0.00	0.00	0.00	0.00	0.00	0.00	0.00	0.00	0.00	0.00	0.00	0.00	0.00	0.00	0.00
	B	0.00	-0.01	-0.01	-0.02	-0.02	-0.02	-0.02	-0.02	-0.01	-0.01	0.00	0.00	-0.03	-0.06	-0.08	-0.09	-0.10	-0.09	-0.08	-0.06	-0.03	0.00
	C	0.00	-0.12	-0.23	-0.31	-0.36	-0.38	-0.35	-0.29	-0.20	-0.09	0.03	0.10	-0.41	-0.89	-1.26	-1.49	-1.58	-1.49	-1.26	-0.89	-0.42	0.10
	D	0.00	0.00	0.00	0.00	0.00	0.00	0.00	0.00	0.00	0.00	0.00	0.00	0.00	-0.01	-0.01	-0.01	-0.01	-0.01	-0.01	-0.01	0.00	0.00
	TOTAL	0.00	-0.13	-0.24	-0.33	-0.38	-0.40	-0.37	-0.31	-0.21	-0.09	0.03	0.11	-0.44	-0.95	-1.35	-1.60	-1.69	-1.60	-1.35	-0.95	-0.45	0.11
G2		0.0 L	0.1 L	0.2 L	0.3 L	0.4 L	0.5 L	0.6 L	0.7 L	0.8 L	0.9 L	1.0 L	0.0 L	0.1 L	0.2 L	0.3 L	0.4 L	0.5 L	0.6 L	0.7 L	0.8 L	0.9 L	1.0 L
	A	0.00	0.00	0.00	0.00	0.00	0.00	0.00	0.00	0.00	0.00	0.00	0.00	0.00	0.00	0.00	0.00	0.00	0.00	0.00	0.00	0.00	0.00
	B	0.00	-0.01	-0.01	-0.02	-0.02	-0.02	-0.02	-0.02	-0.01	-0.01	0.00	0.00	-0.03	-0.06	-0.08	-0.10	-0.10	-0.10	-0.08	-0.06	-0.03	0.00
	C	0.00	-0.07	-0.14	-0.19	-0.22	-0.22	-0.21	-0.18	-0.12	-0.05	0.02	0.08	-0.32	-0.68	-0.96	-1.14	-1.21	-1.14	-0.96	-0.68	-0.32	0.08
	D	0.00	0.00	0.00	0.00	0.00	0.00	0.00	0.00	0.00	0.00	0.00	0.00	0.00	0.00	-0.01	-0.01	-0.01	-0.01	-0.01	0.00	0.00	0.00
	TOTAL	0.00	-0.08	-0.15	-0.21	-0.24	-0.25	-0.23	-0.19	-0.13	-0.06	0.02	0.08	-0.35	-0.74	-1.05	-1.25	-1.32	-1.25	-1.05	-0.74	-0.35	0.08
G3		0.0 L	0.1 L	0.2 L	0.3 L	0.4 L	0.5 L	0.6 L	0.7 L	0.8 L	0.9 L	1.0 L	0.0 L	0.1 L	0.2 L	0.3 L	0.4 L	0.5 L	0.6 L	0.7 L	0.8 L	0.9 L	1.0 L
	A	0.00	0.00	0.00	0.00	0.00	0.00	0.00	0.00	0.00	0.00	0.00	0.00	0.00	0.00	0.00	0.00	0.00	0.00	0.00	0.00	0.00	0.00
	B	0.00	-0.01	-0.01	-0.02	-0.02	-0.02	-0.02	-0.02	-0.01	-0.01	0.00	0.00	-0.03	-0.06	-0.08	-0.10	-0.10	-0.10	-0.08	-0.06	-0.03	0.00
	C	0.00	-0.07	-0.14	-0.19	-0.22	-0.22	-0.21	-0.18	-0.12	-0.05	0.02	0.08	-0.32	-0.68	-0.96	-1.14	-1.21	-1.14	-0.96	-0.68	-0.32	0.08
	D	0.00	0.00	0.00	0.00	0.00	0.00	0.00	0.00	0.00	0.00	0.00	0.00	0.00	0.00	-0.01	-0.01	-0.01	-0.01	-0.01	0.00	0.00	0.00
	TOTAL	0.00	-0.08	-0.15	-0.21	-0.24	-0.25	-0.23	-0.19	-0.14	-0.06	0.02	0.08	-0.35	-0.74	-1.05	-1.25	-1.32	-1.25	-1.05	-0.74	-0.35	0.08
G4		0.0 L	0.1 L	0.2 L	0.3 L	0.4 L	0.5 L	0.6 L	0.7 L	0.8 L	0.9 L	1.0 L	0.0 L	0.1 L	0.2 L	0.3 L	0.4 L	0.5 L	0.6 L	0.7 L	0.8 L	0.9 L	1.0 L
	A	0.00	0.00	0.00	0.00	0.00	0.00	0.00	0.00	0.00	0.00	0.00	0.00	0.00	0.00	0.00	0.00	0.00	0.00	0.00	0.00	0.00	0.00
	B	0.00	-0.01	-0.01	-0.02	-0.02	-0.02	-0.02	-0.02	-0.01	-0.01	0.00	0.00	-0.03	-0.06	-0.08	-0.09	-0.10	-0.09	-0.08	-0.06	-0.03	0.00
	C	0.00	-0.12	-0.23	-0.31	-0.36	-0.38	-0.35	-0.29	-0.20	-0.09	0.03	0.10	-0.41	-0.88	-1.26	-1.49	-1.58	-1.49	-1.26	-0.89	-0.42	0.10
	D	0.00	0.00	0.00	0.00	0.00	0.00	0.00	0.00	0.00	0.00	0.00	0.00	0.00	-0.01	-0.01	-0.01	-0.01	-0.01	-0.01	-0.01	0.00	0.00
	TOTAL	0.00	-0.13	-0.24	-0.33	-0.39	-0.40	-0.37	-0.31	-0.21	-0.09	0.03	0.11	-0.44	-0.95	-1.35	-1.60	-1.69	-1.60	-1.35	-0.95	-0.45	0.11

SPAN 3												SPAN 4										
0.0 L	0.1 L	0.2 L	0.3 L	0.4 L	0.5 L	0.6 L	0.7 L	0.8 L	0.9 L	1.0 L	0.0 L	0.1 L	0.2 L	0.3 L	0.4 L	0.5 L	0.6 L	0.7 L	0.8 L	0.9 L	1.0 L
0.00	0.00	0.00	0.00	0.00	0.00	0.00	0.00	0.00	0.00	0.00	0.00	0.00	0.00	0.00	0.00	0.00	0.00	0.00	0.00	0.00	0.00
0.01	-0.04	-0.09	-0.12	-0.14	-0.15	-0.14	-0.12	-0.09	-0.04	0.01	0.00	-0.01	-0.01	-0.01	-0.02	-0.02	-0.02	-0.02	-0.01	-0.01	0.00
0.14	-0.63	-1.33	-1.89	-2.24	-2.36	-2.24	-1.89	-1.34	-0.63	0.14	0.03	-0.08	-0.19	-0.28	-0.34	-0.37	-0.35	-0.30	-0.22	-0.12	0.00
0.00	0.00	-0.01	-0.01	-0.01	-0.01	-0.01	-0.01	-0.01	0.00	0.00	0.00	0.00	0.00	0.00	0.00	0.00	0.00	0.00	0.00	0.00	0.00
0.15	-0.68	-1.43	-2.02	-2.40	-2.52	-2.40	-2.02	-1.43	-0.68	0.15	0.03	-0.09	-0.20	-0.30	-0.36	-0.39	-0.37	-0.32	-0.24	-0.12	0.00
0.0 L	0.1 L	0.2 L	0.3 L	0.4 L	0.5 L	0.6 L	0.7 L	0.8 L	0.9 L	1.0 L	0.0 L	0.1 L	0.2 L	0.3 L	0.4 L	0.5 L	0.6 L	0.7 L	0.8 L	0.9 L	1.0 L
0.00	0.00	0.00	0.00	0.00	0.00	0.00	0.00	0.00	0.00	0.00	0.00	0.00	0.00	0.00	0.00	0.00	0.00	0.00	0.00	0.00	0.00
0.01	-0.04	-0.09	-0.12	-0.14	-0.15	-0.14	-0.12	-0.09	-0.04	0.01	0.00	-0.01	-0.01	-0.02	-0.02	-0.02	-0.02	-0.02	-0.01	-0.01	0.00
0.11	-0.51	-1.08	-1.53	-1.81	-1.91	-1.81	-1.53	-1.08	-0.51	0.11	0.02	-0.05	-0.12	-0.17	-0.20	-0.22	-0.21	-0.18	-0.13	-0.07	0.00
0.00	0.00	-0.01	-0.01	-0.01	-0.01	-0.01	-0.01	-0.01	0.00	0.00	0.00	0.00	0.00	0.00	0.00	0.00	0.00	0.00	0.00	0.00	0.00
0.12	-0.56	-1.18	-1.66	-1.97	-2.08	-1.97	-1.66	-1.18	-0.56	0.12	0.02	-0.06	-0.13	-0.19	-0.22	-0.24	-0.23	-0.20	-0.15	-0.08	0.00
0.0 L	0.1 L	0.2 L	0.3 L	0.4 L	0.5 L	0.6 L	0.7 L	0.8 L	0.9 L	1.0 L	0.0 L	0.1 L	0.2 L	0.3 L	0.4 L	0.5 L	0.6 L	0.7 L	0.8 L	0.9 L	1.0 L
0.00	0.00	0.00	0.00	0.00	0.00	0.00	0.00	0.00	0.00	0.00	0.00	0.00	0.00	0.00	0.00	0.00	0.00	0.00	0.00	0.00	0.00
0.01	-0.04	-0.09	-0.12	-0.14	-0.15	-0.14	-0.12	-0.09	-0.04	0.01	0.00	-0.01	-0.01	-0.02	-0.02	-0.02	-0.02	-0.02	-0.01	-0.01	0.00
0.11	-0.51	-1.08	-1.53	-1.81	-1.91	-1.81	-1.53	-1.08	-0.51	0.11	0.02	-0.05	-0.12	-0.17	-0.20	-0.22	-0.21	-0.18	-0.13	-0.07	0.00
0.00	0.00	-0.01	-0.01	-0.01	-0.01	-0.01	-0.01	-0.01	0.00	0.00	0.00	0.00	0.00	0.00	0.00	0.00	0.00	0.00	0.00	0.00	0.00
0.12	-0.56	-1.18	-1.66	-1.97	-2.08	-1.97	-1.66	-1.18	-0.56	0.12	0.02	-0.06	-0.13	-0.19	-0.22	-0.24	-0.23	-0.20	-0.15	-0.08	0.00
0.0 L	0.1 L	0.2 L	0.3 L	0.4 L	0.5 L	0.6 L	0.7 L	0.8 L	0.9 L	1.0 L	0.0 L	0.1 L	0.2 L	0.3 L	0.4 L	0.5 L	0.6 L	0.7 L	0.8 L	0.9 L	1.0 L
0.00	0.00	0.00	0.00	0.00	0.00	0.00	0.00	0.00	0.00	0.00	0.00	0.00	0.00	0.00	0.00	0.00	0.00	0.00	0.00	0.00	0.00
0.01	-0.04	-0.09	-0.12	-0.14	-0.15	-0.14	-0.12	-0.09	-0.04	0.01	0.00	-0.01	-0.01	-0.02	-0.02	-0.02	-0.02	-0.02	-0.01	-0.01	0.00
0.14	-0.63	-1.33	-1.89	-2.24	-2.36	-2.24	-1.89	-1.33	-0.63	0.14	0.03	-0.08	-0.19	-0.28	-0.34	-0.37	-0.35	-0.30	-0.22	-0.12	0.00
0.00	0.00	-0.01	-0.01	-0.01	-0.01	-0.01	-0.01	-0.01	0.00	0.00	0.00	0.00	0.00	0.00	0.00	0.00	0.00	0.00	0.00	0.00	0.00
0.15	-0.68	-1.43	-2.02	-2.39	-2.52	-2.39	-2.02	-1.43	-0.68	0.15	0.03	-0.09	-0.20	-0.30	-0.36	-0.39	-0.37	-0.32	-0.23	-0.12	0.00

A - PROFILE GRADE
B - SUPERIMPOSED DEAD LOAD
C - DEAD LOAD, SLAB, HAUNCHES AND SIP
D - DEADLOAD STEEL

NOTE:
CAMBER VALUES ARE THEORETICLE AND MAY VARY.

PROJECT NO. P-5705BB
MECKLENBURG COUNTY

PROJECT NO. 19+68.93 -S1-

NORTH CAROLINA PROFESSIONAL SEAL 045044 ENGINEER CHRISTOPHER PARK
DocuSigned by: Christopher Park
5/2/2018

DOCUMENT NOT CONSIDERED FINAL UNLESS ALL SIGNATURES COMPLETED

HNTB NORTH CAROLINA, P.C.
NC License No. C-1554
343 E. Six Forks Rd., Suite 200, Raleigh, N.C. 27609

DRAWN BY D TRACZYKIEWICZ DATE 3/27/2018
CHECKED BY C PARK DATE 3/27/2018
DWG. NO. 84

STATE OF NORTH CAROLINA
DEPARTMENT OF TRANSPORTATION
RALEIGH

TRADE STREET GIRDER
CAMBER TABLE

REVISIONS						SHEET NO.
NO.	BY	DATE	NO.	BY	DATE	S-709
1	CP	5/2/18	3			TOTAL SHEETS
2			4			98

DocuSign Envelope ID: CA3FA972-10BC-43FA-B248-93FF456CBBE1

0012DEL_P28
1001ADD_P28

TRADE STREET PLATFORM DECK REINFORCEMENT SCHEDULE

MARK	NO.	SIZE	TYPE	LENGTH	WEIGHT (LBS)	A	B	C	D	E	J	REMARKS
ED501	144	5	STR	32' - 1"	4821							SPAN 1 & 4
ED502	72	5	STR	33' - 4"	2505							SPAN 2 STAGGER LAPS
ED503	72	5	STR	17' - 1"	1283							SPAN 2 STAGGER LAPS
ED504	72	5	STR	37' - 7"	2824							SPAN 3 STAGGER LAPS
ED505	72	5	STR	18' - 10"	1415							SPAN 3 STAGGER LAPS
ED506	335	5	4	18' - 8 1/2"	6539	0' - 7"	16' - 5 1/2"	1' - 8"				
ED507	170	5	STR	20' - 0"	3548							
ED508	335	5	5	9' - 7 1/2"	3364	7' - 11 1/2"	1' - 8"					
ED509	335	5	5	13' - 6 1/2"	4733	12' - 11 1/2"	0' - 7"					
ED510	170	5	STR	20' - 0"	3548							
ED511	170	5	2	7' - 5"	1324	1' - 7"	0' - 8"	5' - 2"				RIGHT
ED512	170	5	2	7' - 5"	1324	1' - 7"	0' - 8"	5' - 2"				LEFT
ED513	10	5	STR	32' - 1"	335							SPAN 1 & 4
ED514	5	5	STR	33' - 4"	174		1					SPAN 2 STAGGER LAPS
ED515	5	5	STR	17' - 1"	89							SPAN 2 STAGGER LAPS
ED516	5	5	STR	37' - 7"	196							SPAN 3 STAGGER LAPS
ED517	5	5	STR	18' - 10"	98							SPAN 3 STAGGER LAPS

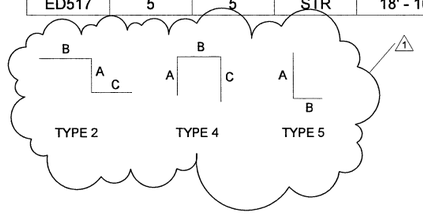

NOTES:
1. (1) INDICATES REINFORCING BAR BEND TYPE.

PROJECT NO. P-5705BB
MECKLENBURG COUNTY

PROJECT NO. 19+68.93 -S1-

NORTH CAROLINA PROFESSIONAL SEAL 045044 ENGINEER CHRISTOPHER PARK
5/2/2018
DocuSigned by: Christopher Park
D3B0CBB1E3E504BD...

DOCUMENT NOT CONSIDERED FINAL UNLESS ALL SIGNATURES COMPLETED

HNTB NORTH CAROLINA, P.C.
NC License No. C-1554
343 E. Six Forks Rd., Suite 200, Raleigh, N.C. 27609

DRAWN BY D TRACZYKIEWICZ DATE 3/27/2018
CHECKED BY C PARK DATE 3/27/2018
DWG. NO. 87

STATE OF NORTH CAROLINA
DEPARTMENT OF TRANSPORTATION
RALEIGH

TRADE STREET SLAB
REINFORCEMENT SCHEDULE

REVISIONS						SHEET NO.
NO.	BY	DATE	NO.	BY	DATE	S-712
1	CP	5/2/18	3			TOTAL SHEETS
2			4			98

DocuSign Envelope ID: CA3FA972-10BC-43FA-B248-93FF456CBBE1

0012DEL_P28
1001ADD_P28

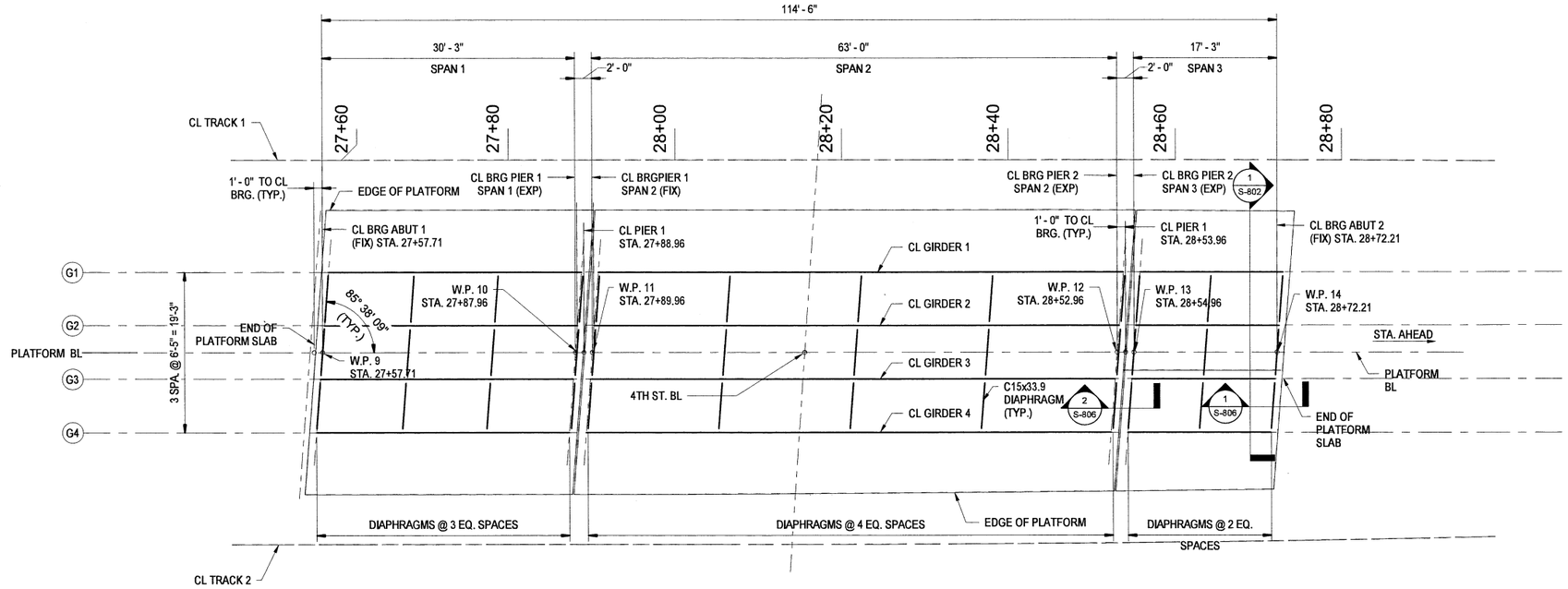

1 S-801 4TH STREET STEEL FRAMING PLAN
SCALE: 1/8" = 1'-0"

NOTES:
1. LENGTHS TAKEN ALONG CL GIRDER.
2. GIRDER ANGLE MEASURED FROM PLATFORM BL TO CL BRG.

GIRDER SCHEDULE

SPAN	GIRDER NO.	LENGTH C-C BRG.	SECTION
1	1	30'-3"	W30x90
1	2	30'-3"	W30x90
1	3	30'-3"	W30x90
1	4	30'-3"	W30x90
2	1	63'-0"	W30x173
2	2	63'-0"	W30x173
2	3	63'-0"	W30x173
2	4	63'-0"	W30x173
3	1	17'-3"	W30x90
3	2	17'-3"	W30x90
3	3	17'-3"	W30x90
3	4	17'-3"	W30x90

WORK POINTS

	WORKING POINT	COORDINATES		PLATFORM BL STATION
		NORTH	EAST	STATION
CL BRG. ABUTMENT 1	W.P. #9	544073.4604	1447828.9540	27+57.71
CL BRG. PIER 1	W.P. #10	544051.7887	1447807.8495	27+87.96
CL BRG. PIER 1	W.P. #11	544050.3559	1447806.4542	27+89.96
CL BRG. PIER 2	W.P. #12	544005.2215	1447762.5010	28+52.96
CL BRG. PIER 2	W.P. #13	544003.7886	1447761.1056	28+54.96
CL BRG. ABUTMENT 2	W.P. #14	543991.4304	1447749.0708	28+72.21

3 S-801 4TH STREET WORK POINTS
SCALE: 12" = 1'-0"

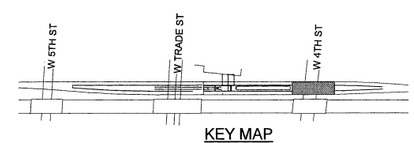

KEY MAP
SCALE: NTS

PROJECT NO. P-5705BB
MECKLENBURG COUNTY
PROJECT NO. 19+68.93 -S1-

NORTH CAROLINA PROFESSIONAL SEAL 045044 ENGINEER CHRISTOPHER PARK
5/2/2018
DocuSigned by: Christopher Park
D38CCEE83E5048D...

DOCUMENT NOT CONSIDERED FINAL UNLESS ALL SIGNATURES COMPLETED

HNTB NORTH CAROLINA, P.C.
NC License No. C-1554
343 E. Six Forks Rd., Suite 200, Raleigh, N.C. 27609

DRAWN BY D TRACZYKIEWICZ DATE 3/27/2018
CHECKED BY C PARK DATE 3/27/2018
DWG. NO. 88

STATE OF NORTH CAROLINA
DEPARTMENT OF TRANSPORTATION
RALEIGH

4TH STREET STEEL FRAMING PLAN

REVISIONS						SHEET NO.
NO.	BY	DATE	NO.	BY	DATE	S-801
1	CP	5/2/18	3			TOTAL SHEETS
2			4			98

DocuSign Envelope ID: CA3FA972-10BC-43FA-B248-93FF456CBBE1

0012DEL_P28
1001ADD_P28

1 / S-802 4TH STREET SECTION
SCALE: 1/2" = 1'-0"

NOTES:
1. A, B, C DENOTE TOP OF SLAB ELEVATION.
2. SECTION VIEW IS SHOWN LOOKING STATIONS AHEAD.

TABLE OF GIRDER SEAT ELEVATIONS					
LOCATION		GIRDER NUMBER			
		1	2	3	4
SPAN 1	CL BRG. ABUT. 1	744.068	744.068	744.068	744.068
	CL BRG. PIER 1	744.043	744.043	744.043	744.043
SPAN 2	CL BRG. PIER 1	743.967	743.967	743.967	743.967
	CL BRG. PIER 2	743.916	743.916	743.916	743.916
SPAN 3	CL BRG. PIER 2	743.990	743.990	743.990	743.990
	CL BRG. ABUT. 2	744.043	744.043	744.043	744.043

TOP OF DECK ELEVATIONS			
STATION	PT A	PT B	PT C
27+56.38	–	–	747.932
27+57.71	–	747.753	–
27+59.05	747.929	–	–
27+60.00	747.929	747.754	747.929
27+70.00	747.921	747.746	747.921
27+80.00	747.913	747.738	747.913
27+86.63	–	–	747.907
27+87.96	–	747.733	–
27+88.71	747.906	–	–
27+89.30	–	–	747.906
27+89.96	–	747.731	–
27+90.00	747.905	747.730	747.905
27+91.30	747.904	–	–
28+00.00	747.897	747.722	747.898
28+10.00	747.889	747.714	747.890
28+20.00	747.881	747.706	747.882
28+30.00	747.873	747.699	747.874
28+40.00	747.865	747.691	747.866
28+50.00	747.857	747.683	747.858
28+51.66	–	–	747.856
28+52.96	–	747.679	–
28+53.66	747.853	–	–
28+54.30	–	–	747.855
28+54.96	–	747.678	–
28+56.30	747.852	–	–
28+60.00	747.849	747.676	747.850
28+70.00	747.841	747.669	747.842
28+70.92	–	–	747.841
28+72.21	–	747.666	–
28+73.54	747.838	–	–

PROJECT NO. P-5705BB
MECKLENBURG COUNTY
PROJECT NO. 19+68.93 -S1-

NORTH CAROLINA PROFESSIONAL SEAL 045044 ENGINEER CHRISTOPHER PARK
DocuSigned by: Christopher Park D360CEE3E3E504BD...
5/2/2018

DOCUMENT NOT CONSIDERED FINAL UNLESS ALL SIGNATURES COMPLETED

HNTB NORTH CAROLINA, P.C.
NC License No. C-1554
343 E. Six Forks Rd., Suite 200, Raleigh, N.C. 27609

DRAWN BY D TRACZYKIEWICZ DATE 3/27/2018
CHECKED BY C PARK DATE 3/27/2018
DWG. NO. 89

STATE OF NORTH CAROLINA
DEPARTMENT OF TRANSPORTATION
RALEIGH

4TH STREET TYPICAL SECTION ONLY AT ABUTMENTS & PLATFORM SLAB ELEVATIONS

REVISIONS						SHEET NO.
NO.	BY	DATE	NO.	BY	DATE	S-802
1	CP	5/2/18	3			TOTAL SHEETS
2			4			98

DocuSign Envelope ID: CA3FA972-10BC-43FA-B248-93FF456CBBE1

0012DEL_P28
1001ADD_P28

GIRDER NO.	DEFLECTIONS	SPAN 1											SPAN 2												SPAN 3										
G1		0.0 L	0.1 L	0.2 L	0.3 L	0.4 L	0.5 L	0.6 L	0.7 L	0.8 L	0.9 L	1.0 L	0.0 L	0.1 L	0.2 L	0.3 L	0.4 L	0.5 L	0.6 L	0.7 L	0.8 L	0.9 L	1.0 L	0.0 L	0.1 L	0.2 L	0.3 L	0.4 L	0.5 L	0.6 L	0.7 L	0.8 L	0.9 L	1.0 L
	A	0.00	0.00	0.00	0.00	0.00	0.00	0.00	0.00	0.00	0.00	0.00	0.00	0.00	0.00	0.00	0.00	0.00	0.00	0.00	0.00	0.00	0.00	0.00	0.00	0.00	0.00	0.00	0.00	0.00	0.00	0.00	0.00	0.00	0.00
	B	0.00	-0.01	-0.01	-0.02	-0.02	-0.02	-0.02	-0.02	-0.01	-0.01	0.00	0.01	-0.08	-0.16	-0.22	-0.26	-0.28	-0.26	-0.22	-0.16	-0.08	0.01	0.00	0.00	0.00	0.00	0.00	0.00	0.00	0.00	0.00	0.00	0.00	0.00
	C	0.00	-0.12	-0.23	-0.31	-0.36	-0.37	-0.35	-0.29	-0.20	-0.09	0.03	0.12	-0.71	-1.46	-2.05	-2.43	-2.56	-2.43	-2.05	-1.46	-0.71	0.12	0.00	-0.01	-0.03	-0.04	-0.05	-0.05	-0.05	-0.04	-0.03	-0.02	0.00
	D	0.00	0.00	0.00	0.00	0.00	0.00	0.00	0.00	0.00	0.00	0.00	0.00	-0.01	-0.01	-0.02	-0.02	-0.02	-0.02	-0.02	-0.01	-0.01	0.00	0.00	0.00	0.00	0.00	0.00	0.00	0.00	0.00	0.00	0.00	0.00	0.00
	TOTAL	0.00	-0.13	-0.24	-0.32	-0.38	-0.39	-0.37	-0.30	-0.21	-0.09	0.03	0.14	-0.79	-1.63	-2.29	-2.71	-2.85	-2.71	-2.29	-1.63	-0.79	0.14	0.00	-0.01	-0.03	-0.04	-0.05	-0.05	-0.05	-0.04	-0.03	-0.02	0.00
G2		0.0 L	0.1 L	0.2 L	0.3 L	0.4 L	0.5 L	0.6 L	0.7 L	0.8 L	0.9 L	1.0 L	0.0 L	0.1 L	0.2 L	0.3 L	0.4 L	0.5 L	0.6 L	0.7 L	0.8 L	0.9 L	1.0 L	0.0 L	0.1 L	0.2 L	0.3 L	0.4 L	0.5 L	0.6 L	0.7 L	0.8 L	0.9 L	1.0 L
	A	0.00	0.00	0.00	0.00	0.00	0.00	0.00	0.00	0.00	0.00	0.00	0.00	0.00	0.00	0.00	0.00	0.00	0.00	0.00	0.00	0.00	0.00	0.00	0.00	0.00	0.00	0.00	0.00	0.00	0.00	0.00	0.00	0.00
	B	0.00	-0.01	-0.01	-0.02	-0.02	-0.02	-0.02	-0.02	-0.01	-0.01	0.00	0.01	-0.08	-0.16	-0.23	-0.27	-0.28	-0.27	-0.23	-0.16	-0.08	0.01	0.00	0.00	0.00	0.00	0.00	0.00	0.00	0.00	0.00	0.00	0.00
	C	0.00	-0.07	-0.14	-0.18	-0.21	-0.22	-0.21	-0.17	-0.12	-0.05	0.02	0.10	-0.58	-1.20	-1.69	-2.01	-2.12	-2.01	-1.69	-1.21	-0.58	0.10	0.00	-0.01	-0.01	-0.02	-0.02	-0.02	-0.02	-0.02	-0.01	-0.01	0.00
	D	0.00	0.00	0.00	0.00	0.00	0.00	0.00	0.00	0.00	0.00	0.00	0.00	-0.01	-0.01	-0.02	-0.02	-0.02	-0.02	-0.02	-0.01	-0.01	0.00	0.00	0.00	0.00	0.00	0.00	0.00	0.00	0.00	0.00	0.00	0.00
	TOTAL	0.00	-0.08	-0.15	-0.20	-0.24	-0.24	-0.23	-0.19	-0.13	-0.06	0.02	0.11	-0.67	-1.38	-1.93	-2.29	-2.42	-2.29	-1.93	-1.38	-0.67	0.11	0.00	-0.01	-0.02	-0.02	-0.03	-0.03	-0.03	-0.02	-0.02	-0.01	0.00
G3		0.0 L	0.1 L	0.2 L	0.3 L	0.4 L	0.5 L	0.6 L	0.7 L	0.8 L	0.9 L	1.0 L	0.0 L	0.1 L	0.2 L	0.3 L	0.4 L	0.5 L	0.6 L	0.7 L	0.8 L	0.9 L	1.0 L	0.0 L	0.1 L	0.2 L	0.3 L	0.4 L	0.5 L	0.6 L	0.7 L	0.8 L	0.9 L	1.0 L
	A	0.00	0.00	0.00	0.00	0.00	0.00	0.00	0.00	0.00	0.00	0.00	0.00	0.00	0.00	0.00	0.00	0.00	0.00	0.00	0.00	0.00	0.00	0.00	0.00	0.00	0.00	0.00	0.00	0.00	0.00	0.00	0.00	0.00
	B	0.00	-0.01	-0.01	-0.02	-0.02	-0.02	-0.02	-0.02	-0.01	-0.01	0.00	0.01	-0.08	-0.16	-0.23	-0.27	-0.28	-0.27	-0.23	-0.16	-0.08	0.01	0.00	0.00	0.00	0.00	0.00	0.00	0.00	0.00	0.00	0.00	0.00
	C	0.00	-0.07	-0.14	-0.18	-0.21	-0.22	-0.21	-0.17	-0.12	-0.05	0.02	0.10	-0.59	-1.21	-1.69	-2.01	-2.12	-2.01	-1.69	-1.20	-0.58	0.10	0.00	-0.01	-0.01	-0.02	-0.02	-0.02	-0.02	-0.02	-0.01	-0.01	0.00
	D	0.00	0.00	0.00	0.00	0.00	0.00	0.00	0.00	0.00	0.00	0.00	0.00	-0.01	-0.01	-0.02	-0.02	-0.02	-0.02	-0.02	-0.01	-0.01	0.00	0.00	0.00	0.00	0.00	0.00	0.00	0.00	0.00	0.00	0.00	0.00
	TOTAL	0.00	-0.08	-0.15	-0.20	-0.24	-0.24	-0.23	-0.19	-0.13	-0.06	0.02	0.11	-0.67	-1.38	-1.93	-2.29	-2.42	-2.29	-1.93	-1.38	-0.67	0.11	0.00	-0.01	-0.02	-0.02	-0.03	-0.03	-0.03	-0.02	-0.02	-0.01	0.00
G4		0.0 L	0.1 L	0.2 L	0.3 L	0.4 L	0.5 L	0.6 L	0.7 L	0.8 L	0.9 L	1.0 L	0.0 L	0.1 L	0.2 L	0.3 L	0.4 L	0.5 L	0.6 L	0.7 L	0.8 L	0.9 L	1.0 L	0.0 L	0.1 L	0.2 L	0.3 L	0.4 L	0.5 L	0.6 L	0.7 L	0.8 L	0.9 L	1.0 L
	A	0.00	0.00	0.00	0.00	0.00	0.00	0.00	0.00	0.00	0.00	0.00	0.00	0.00	0.00	0.00	0.00	0.00	0.00	0.00	0.00	0.00	0.00	0.00	0.00	0.00	0.00	0.00	0.00	0.00	0.00	0.00	0.00	0.00
	B	0.00	-0.01	-0.01	-0.02	-0.02	-0.02	-0.02	-0.02	-0.01	-0.01	0.00	0.01	-0.08	-0.16	-0.22	-0.26	-0.28	-0.26	-0.22	-0.16	-0.08	0.01	0.00	0.00	0.00	0.00	0.00	0.00	0.00	0.00	0.00	0.00	0.00
	C	0.00	-0.12	-0.23	-0.31	-0.36	-0.37	-0.35	-0.29	-0.20	-0.09	0.03	0.12	-0.71	-1.46	-2.05	-2.43	-2.56	-2.43	-2.05	-1.46	-0.71	0.12	0.00	-0.01	-0.02	-0.04	-0.04	-0.05	-0.05	-0.04	-0.03	-0.02	0.00
	D	0.00	0.00	0.00	0.00	0.00	0.00	0.00	0.00	0.00	0.00	0.00	0.00	-0.01	-0.01	-0.02	-0.02	-0.02	-0.02	-0.02	-0.01	-0.01	0.00	0.00	0.00	0.00	0.00	0.00	0.00	0.00	0.00	0.00	0.00	0.00
	TOTAL	0.00	-0.13	-0.24	-0.33	-0.38	-0.39	-0.37	-0.30	-0.21	-0.09	0.03	0.14	-0.79	-1.63	-2.29	-2.71	-2.86	-2.71	-2.29	-1.63	-0.79	0.14	0.00	-0.01	-0.03	-0.04	-0.05	-0.05	-0.05	-0.04	-0.03	-0.02	0.00

1

A - PROFILE GRADE
B - SUPERIMPOSED DEAD LOAD
C - DEAD LOAD, SLAB, HAUNCHES AND SIP
D - DEADLOAD STEEL

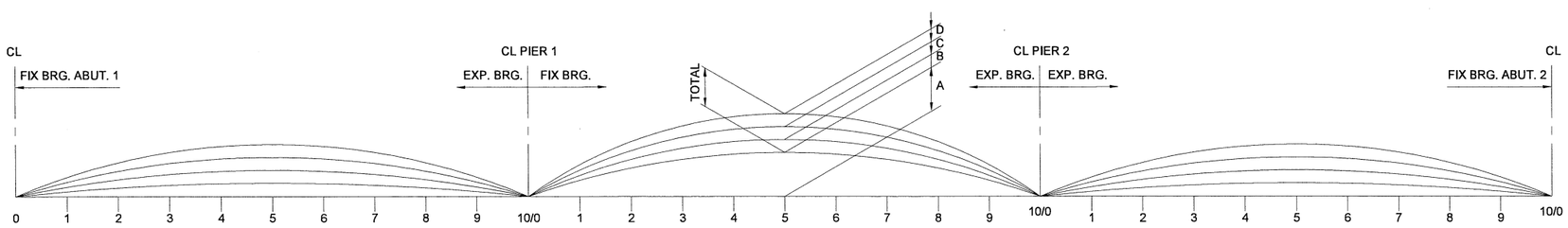

1 / S-808 4TH STREET CAMBER DIAGRAM
SCALE: 3/4" = 1'-0"

PROJECT NO. P-5705BB
MECKLENBURG COUNTY
PROJECT NO. 19+68.93 -S1-

NORTH CAROLINA PROFESSIONAL SEAL 045044 ENGINEER CHRISTOPHER PARK
5/2/2018
DocuSigned by: Christopher Park
D980CEEE9E504BD...

DOCUMENT NOT CONSIDERED FINAL UNLESS ALL SIGNATURES COMPLETED

HNTB NORTH CAROLINA, P.C.
NC License No. C-1554
343 E. Six Forks Rd., Suite 200, Raleigh, N.C. 27609

DRAWN BY D TRACZYKIEWICZ DATE 3/27/2018
CHECKED BY C PARK DATE 3/27/2018
DWG. NO. 95

STATE OF NORTH CAROLINA
DEPARTMENT OF TRANSPORTATION
RALEIGH

4TH STREET GIRDER CAMBER TABLE

REVISIONS						SHEET NO.
NO.	BY	DATE	NO.	BY	DATE	S-808
1	CP	5/2/18	3			TOTAL SHEETS
2			4			98

DocuSign Envelope ID: CA3FA972-10BC-43FA-B248-93FF456CBBE1

0012DEL_P28
1001ADD_P28

MARK	NO.	SIZE	TYPE	LENGTH	WEIGHT (LBS)	A	B	C	D	E	J	REMARKS
ED541	72	5	STR	31' - 8"	2379							SPAN 1
ED542	72	5	STR	23' - 3 5/6"	1752							SPAN 2 STAGGER LAPS
ED543	72	5	STR	44' - 3 3/4"	3329							SPAN 2 STAGGER LAPS
ED544	72	5	STR	18' - 8"	1402							SPAN 3
ED545	234	5	4	18' - 6 1/2"	4527	0' - 7"	16' - 3 1/2"	1' - 8"				
ED546	118	5	STR	20' - 0"	2462							
ED547	234	5	5	8' - 5 1/2"	2065	6' - 9 1/2"	1' - 8"					
ED548	234	5	5	14' - 4 1/2"	3510	13' - 9 1/2"	0' - 7"					
ED549	118	5	STR	20' - 0"	2462							
ED550	118	5	2	7' - 5"	913	1' - 7"	0' - 8"	5' - 2"				RIGHT
ED551	118	5	2	7' - 5"	913	1' - 7"	0' - 8"	5' - 2"				LEFT
ED552	5	5	STR	31' - 8"	165							SPAN 1
ED553	5	5	STR	21' - 4 3/4"	112							SPAN 2 STAGGER LAPS
ED554	5	5	STR	43' - 5 1/4"	227		1					SPAN 2 STAGGER LAPS
ED555	5	5	STR	18' - 8"	97							SPAN 3

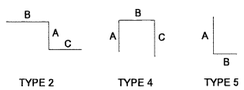

1 / S-811 4TH STREET REBAR SCHEDULE

NOTES:

1. INDICATES REINFORCING BAR BEND TYPE.

PROJECT NO. P-5705BB
MECKLENBURG COUNTY

PROJECT NO. 19+68.93 -S1-

NORTH CAROLINA PROFESSIONAL SEAL 045044 ENGINEER CHRISTOPHER PARK

DocuSigned by: Christopher Park
D380CEEE3E5048D...

5/2/2018

DOCUMENT NOT CONSIDERED FINAL UNLESS ALL SIGNATURES COMPLETED

HNTB NORTH CAROLINA, P.C.
NC License No. C-1554
343 E. Six Forks Rd., Suite 200, Raleigh, N.C. 27609

DRAWN BY D. TRACZYKIEWICZ DATE 3/27/2018
CHECKED BY C. PARK DATE 3/27/2018
DWG. NO. 98

STATE OF NORTH CAROLINA
DEPARTMENT OF TRANSPORTATION
RALEIGH

4TH STREET SLAB
REINFORCEMENT SCHEDULE

REVISIONS						SHEET NO.
NO.	BY	DATE	NO.	BY	DATE	S-811
1	CP	5/2/18	3			TOTAL SHEETS
2			4			98