DocuSign Envelope ID: C39F3A9A-D630-474C-9585-E9D159400B9F

TIP NO.	SHEET NO.
R-2501C	SIGN-4

APPROVED: DocuSigned by: Andrew D. Klinksiek E3D78FB4596E44B...

DATE: 2/5/2018

SEAL

NORTH CAROLINA PROFESSIONAL SEAL 40311 ENGINEER ANDREW D. KLINKSIEK

DOCUMENT NOT CONSIDERED FINAL UNLESS ALL SIGNATURES COMPLETED

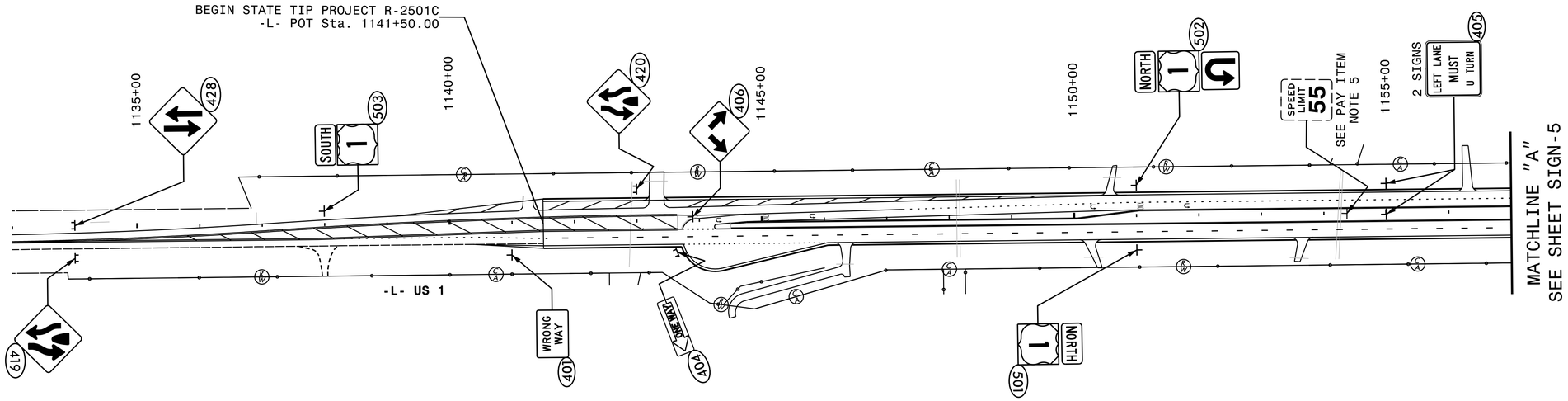

HNTB
HNTB NORTH CAROLINA, P.C.
343 E. Six Forks Road, Suite 200
Raleigh, North Carolina 27609
NC License No: C-1554
(919) 546-8997

EXISTING AND PROPOSED SIGNS
-L- STA. 1133+00 TO 1157+00