DocuSign Envelope ID: 5E0AFBB8-8B7F-4C08-8329-D9A2FAA70300

5/24/2017 1:05:31 PM G:\Projects\2016\U-2525C (Greensboro Eastern Loop)\Structures\Site 9\Drawings\Final\U2525C_SMU_EB2_SITE9.dgn

NOTES:

#4 V1 BARS MAY BE SHIFTED SLIGHTLY TO AVOID STIRRUPS IN CAP.

FOR SECTION A-A & B-B, SEE SHEET 3 OF 3.

THE TOP SURFACE OF THE END BENT CAP AND WINGS (POUR 1), EXCLUDING THE BEARING AREA, SHALL BE RAKED TO A DEPTH OF 1/4".

INSTALL THE 4" DIAMETER DRAIN PIPE THROUGH THE WINGWALL AS REQUIRED FOR REINFORCED BRIDGE APPROACH FILLS, SEE ROADWAY PLANS. REINFORCING STEEL IN THE WINGWALL MAY BE SHIFTED AS NECESSARY TO CLEAR THE DRAIN PIPE.

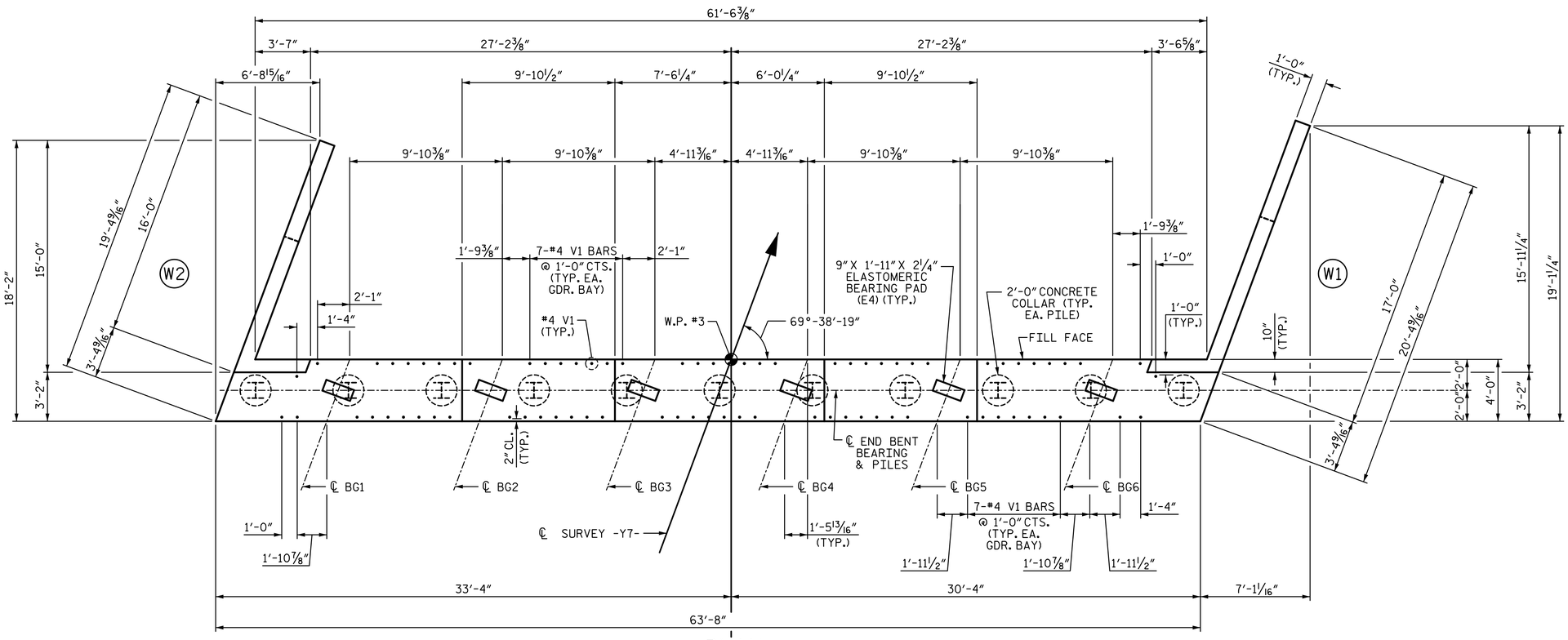

PLAN

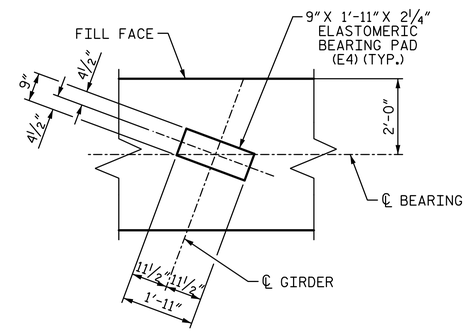

DETAIL "A"

(TYP. EA. GIRDER)

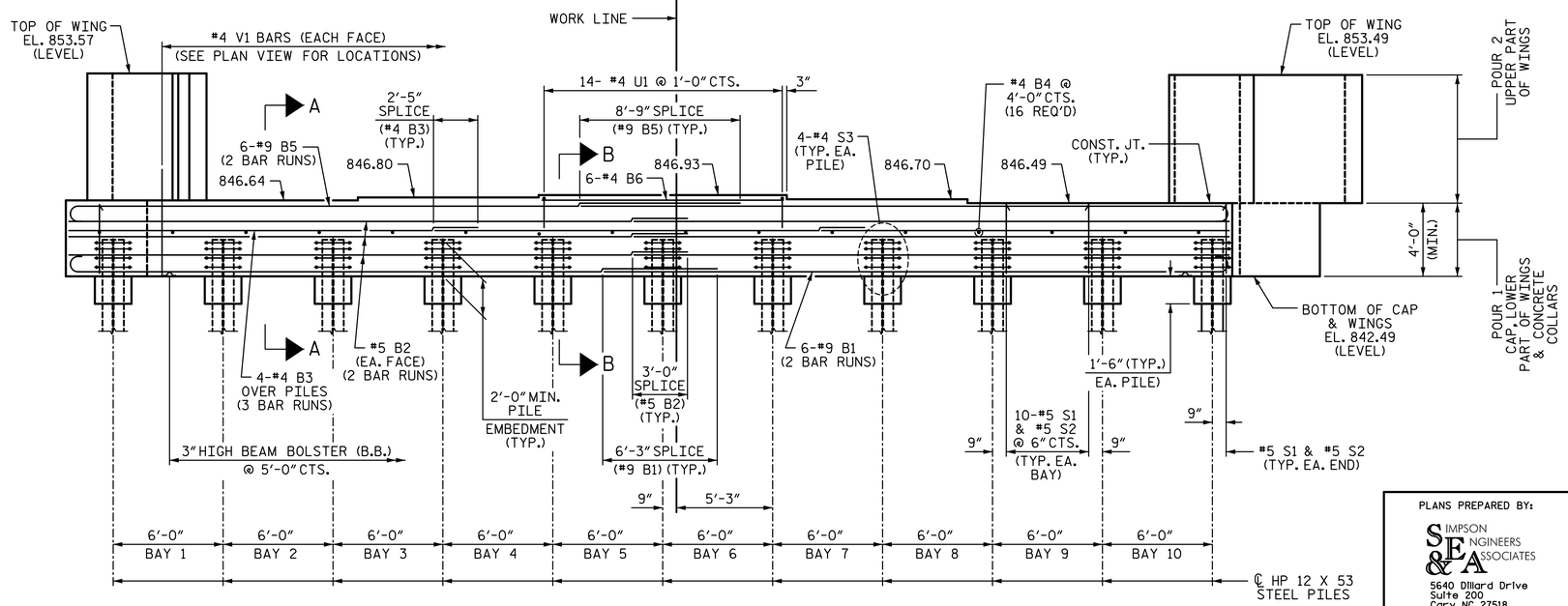

ELEVATION

PROJECT NO. U-2525C

GUILFORD COUNTY

STATION: 25+52.71 -Y7-

SHEET 1 OF 3

STATE OF NORTH CAROLINA
DEPARTMENT OF TRANSPORTATION
RALEIGH

SUBSTRUCTURE

END BENT 2

PLANS PREPARED BY:

SIMPSON ENGINEERS & ASSOCIATES
5640 Dillard Drive
Suite 200
Cary, NC 27518
(919) 852-0468
(919) 852-0598 (Fax)
www.simpsonengr.com

LICENSURE NO. C-2521

NORTH CAROLINA PROFESSIONAL SEAL 24390 ENGINEER TIMOTHY J. BEACH
DocuSigned by: Timothy J. Beach
5/24/2017

DOCUMENT NOT CONSIDERED FINAL UNLESS ALL SIGNATURES COMPLETED

REVISIONS						
NO.	BY:	DATE:	NO.	BY:	DATE:	
1			3			
2			4			

SHEET NO. S10-29

TOTAL SHEETS 36

DRAWN BY: S.D. COOPER DATE: 3-17
CHECKED BY: T.J. BEACH DATE: 3-17
DESIGN ENGINEER OF RECORD: T.J. BEACH DATE: 3-17