DocuSign Envelope ID: 5E0AFBB8-8B7F-4C08-8329-D9A2FAA70300

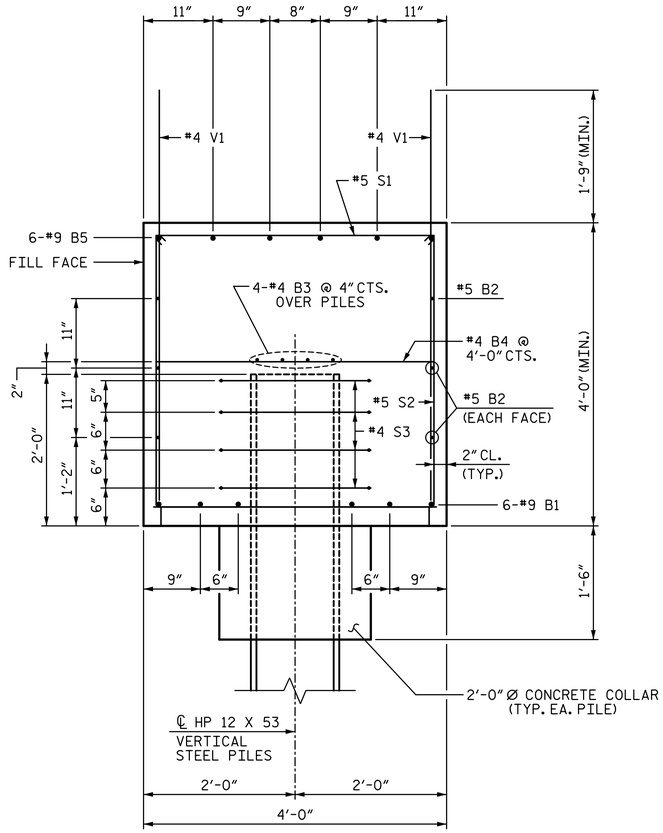

SECTION A-A

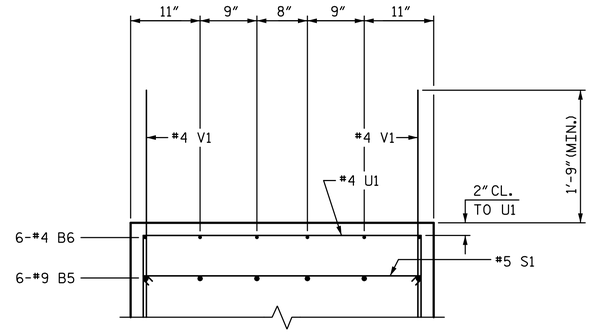

PARTIAL SECTION B-B

BAR TYPES

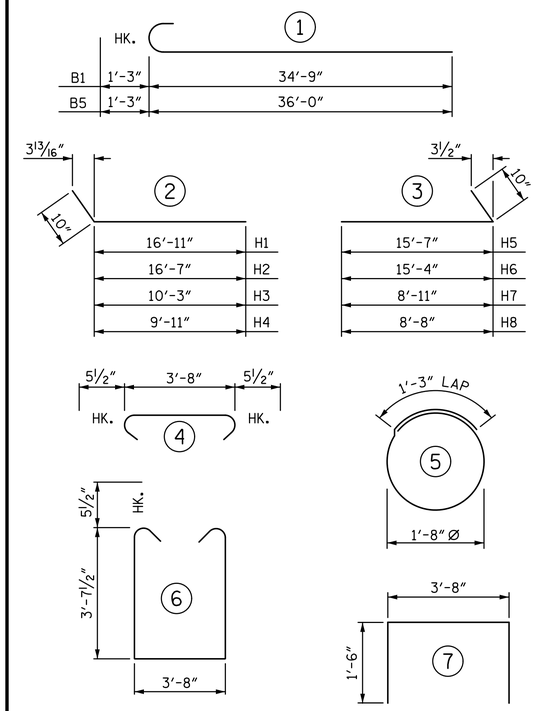

ALL BAR DIMENSIONS ARE OUT TO OUT

BILL OF MATERIAL

END BENT 1

BAR	NO.	SIZE	TYPE	LENGTH	WEIGHT
B1	12	#9	1	36′-0″	1469
B2	12	#5	STR	33′-2″	415
B3	12	#4	STR	22′-9″	182
B4	16	#4	STR	3′-8″	39
B5	12	#9	1	37′-3″	1520
B6	6	#4	STR	13′-2″	53
H1	14	#5	2	17′-9″	259
H2	14	#5	2	17′-5″	254
H3	8	#5	2	11′-1″	92
H4	8	#5	2	10′-9″	90
H5	14	#5	3	16′-5″	240
H6	14	#5	3	16′-2″	236
H7	8	#5	3	9′-9″	81
H8	8	#5	3	9′-6″	79
K1	56	#4	STR	4′-3″	159
S1	102	#5	4	4′-7″	488
S2	102	#5	6	11′-10″	1259
S3	44	#4	5	6′-6″	191
U1	14	#4	7	6′-8″	62
V1	78	#4	STR	5′-11″	308
V2	36	#5	STR	6′-7″	247
V3	38	#5	STR	10′-8″	423
V4	34	#5	STR	10′-7″	375

TOTAL REINFORCING STEEL 8521 LB

CLASS A CONCRETE

POUR 1 (CAP, COLLARS, & LOWER WINGS) 44.2 CY

POUR 2 (UPPER WINGS) 10.1 CY

TOTAL CLASS A CONCRETE 54.3 CY

HP 12 X 53 STEEL PILES NO. 11 715 LF

PILE DRIVING EQUIPMENT SETUP HP 12 X 53 STEEL PILES 11 EA.

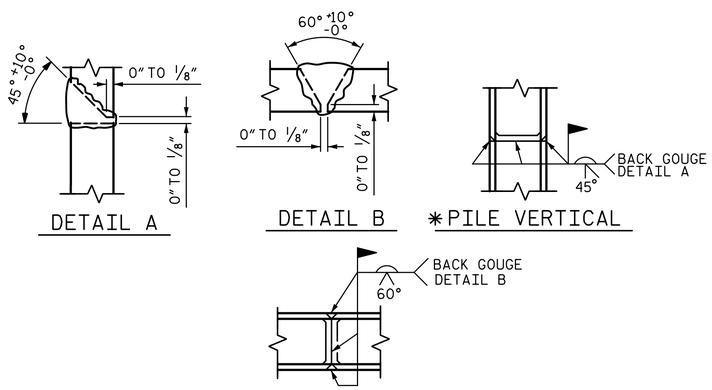

✱PILE HORIZONTAL OR VERTICAL

PILE SPLICE DETAILS

✱POSITION OF PILE DURING WELDING

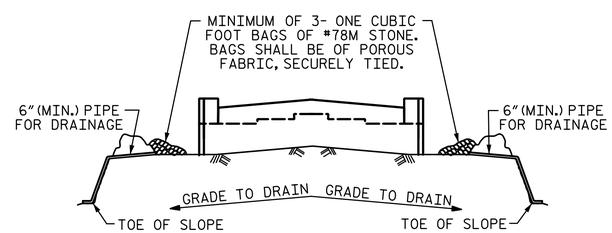

BAGGED STONE AND PIPE SHALL BE PLACED IMMEDIATELY AFTER COMPLETION OF END BENT EXCAVATION. PIPE MAY BE EITHER CONCRETE, CORRUGATED STEEL, CORRUGATED ALUMINUM ALLOY, OR CORRUGATED PLASTIC. PERFORATED PIPE WILL NOT BE ALLOWED.

BAGGED STONE SHALL REMAIN IN PLACE UNTIL THE ENGINEER DIRECTS THAT IT BE REMOVED. THE CONTRACTOR SHALL REMOVE AND DISPOSE OF SILT ACCUMULATIONS AT BAGGED STONE WHEN SO DIRECTED BY THE ENGINEER. BAGS SHALL BE REMOVED AND REPLACED WHENEVER THE ENGINEER DETERMINES THAT THEY HAVE DETERIORATED AND LOST THEIR EFFECTIVENESS.

NO SEPARATE PAYMENT WILL BE MADE FOR THIS WORK AND THE ENTIRE COST OF THIS WORK SHALL BE INCLUDED IN THE UNIT CONTRACT PRICE BID FOR THE SEVERAL PAY ITEMS.

TEMPOARY DRAINAGE AT END BENT

PROJECT NO. U-2525C
GUILFORD COUNTY
STATION: 25+52.71 -Y7-

SHEET 3 OF 3

STATE OF NORTH CAROLINA
DEPARTMENT OF TRANSPORTATION
RALEIGH

SUBSTRUCTURE

END BENT 1

PLANS PREPARED BY:
SIMPSON ENGINEERS & ASSOCIATES
5640 Dillard Drive
Suite 200
Cary, NC 27518
(919) 852-0468
(919) 852-0598 (Fax)
www.simpsonengr.com
LICENSURE NO. C-2521

NORTH CAROLINA PROFESSIONAL SEAL 24380 ENGINEER THEO J. BEACH 5/24/2017

DOCUMENT NOT CONSIDERED FINAL UNLESS ALL SIGNATURES COMPLETED

REVISIONS							SHEET NO.
NO.	BY:	DATE:	NO.	BY:	DATE:		S10-26
1			3				TOTAL SHEETS
2			4				36

DRAWN BY: S.D. COOPER DATE: 3-17
CHECKED BY: T.J. BEACH DATE: 3-17
DESIGN ENGINEER OF RECORD: T.J. BEACH DATE: 3-17

5/24/2017 1:05:30 PM G:\Projects\2016\U-2525C (Greensboro Eastern Loop)\Structures\Site 9\Drawings\Final\U2525C_SMU_EB1_SITE9.dgn