DocuSign Envelope ID: 9FFC909D-E23B-4585-BC24-10B4F394318C

NOTES

STIRRUPS IN CAP MAY BE SHIFTED AS NECESSARY TO CLEAR ANCHOR BOLTS.

HOOKS ON "V" BARS MAY BE TURNED AS NECESSARY FOR PLACING REINFORCED STEEL.

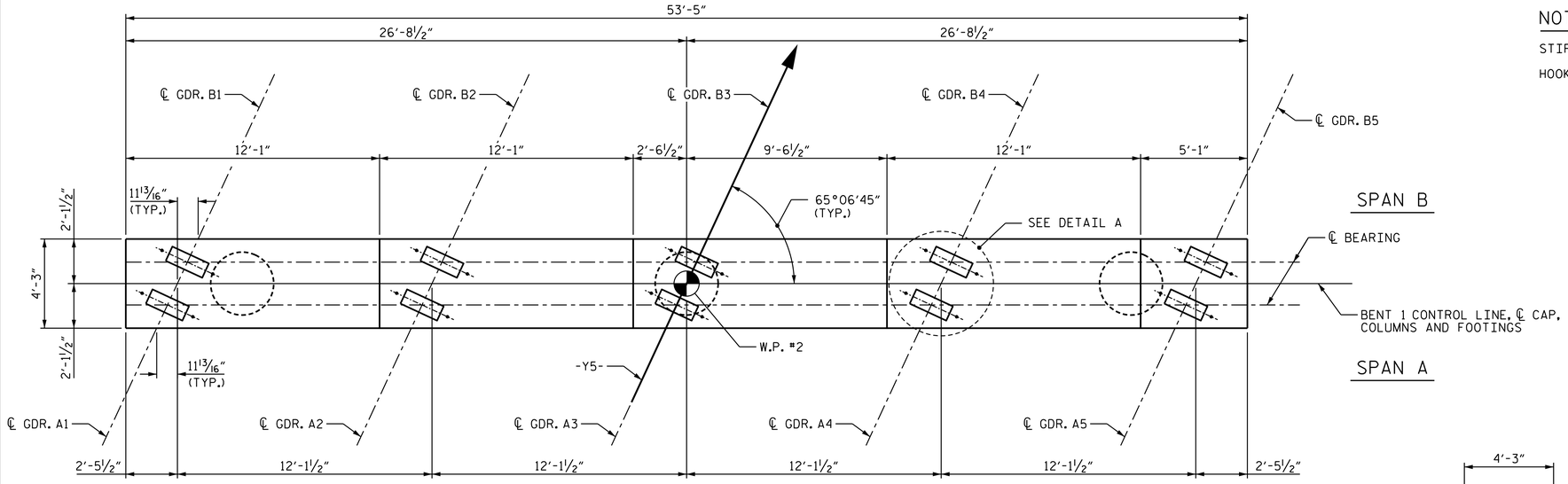

PLAN

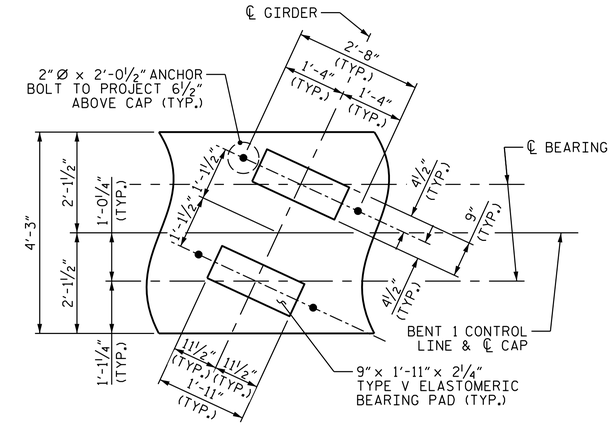

DETAIL A

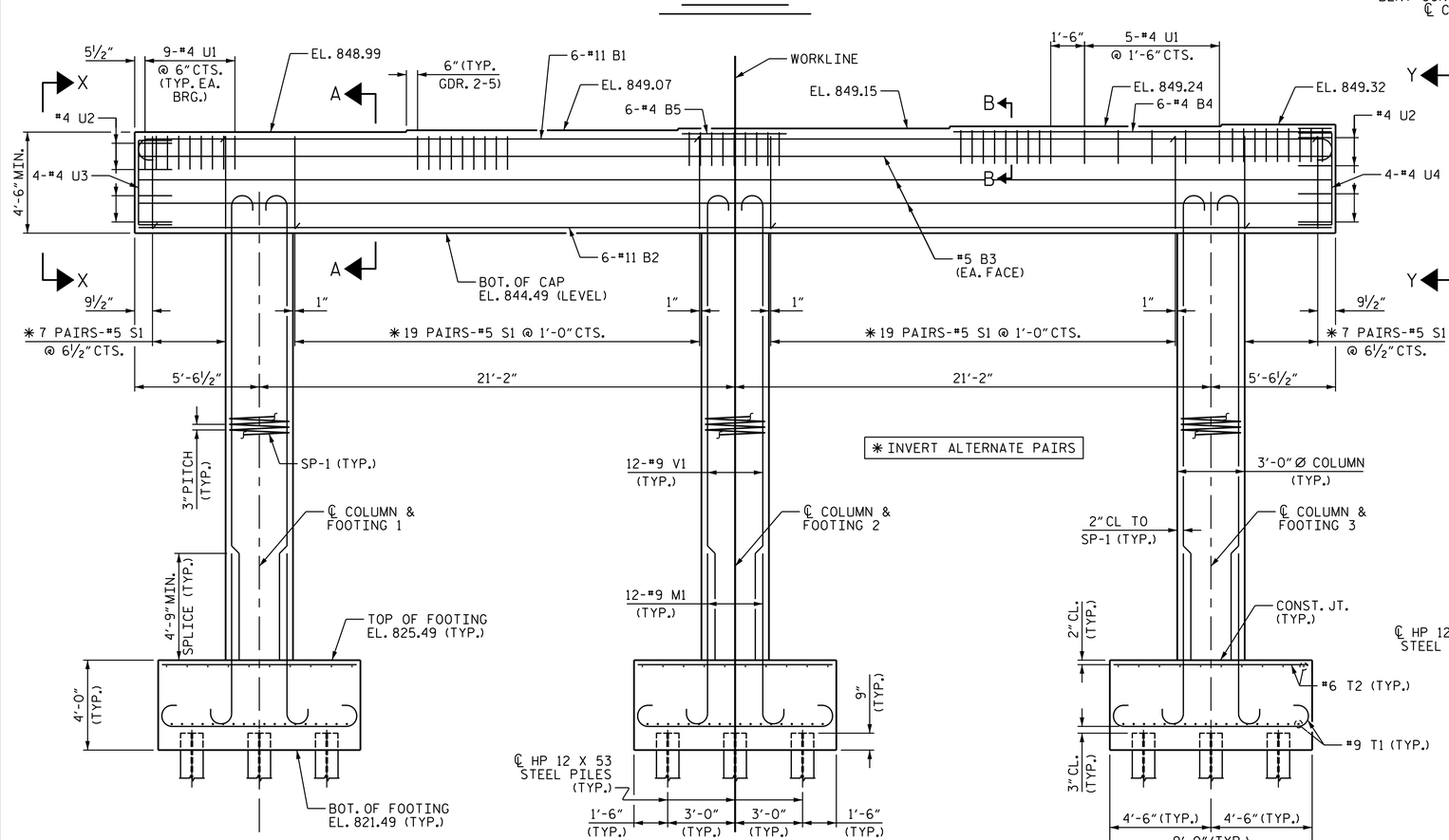

ELEVATION

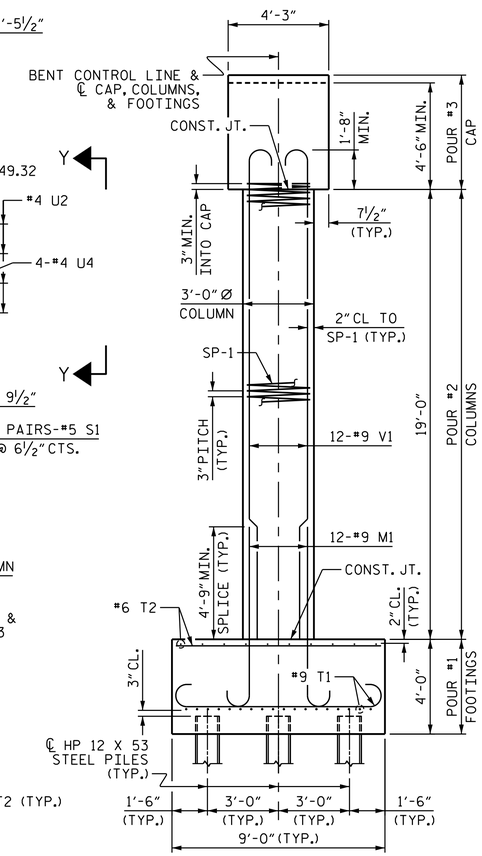

END ELEVATION

PROJECT NO. U-2525C

GUILFORD COUNTY

STATION: 22+29.98 -Y5-

SHEET 1 OF 2

STATE OF NORTH CAROLINA
DEPARTMENT OF TRANSPORTATION
RALEIGH

SUBSTRUCTURE

BENT 1

DOCUMENT NOT CONSIDERED FINAL UNLESS ALL SIGNATURES COMPLETED

PLANS PREPARED BY:
MOTT MACDONALD
PO Box 700
Fuquay-Varina, NC 27526
(919) 552-2253
www.mottmac.com
LICENSE NO. F-0669

NORTH CAROLINA PROFESSIONAL SEAL 11915 ENGINEER JOHN C. FRYE

DocuSigned by: John C. Frye
8C2EF4043864E3...
12/22/2017

REVISIONS						
NO.	BY:	DATE:	NO.	BY:	DATE:	
1			3			
2			4			

SHEET NO. S7-21

TOTAL SHEETS 28

DRAWN BY:	R. H. BRAINARD	DATE:	10-2017
CHECKED BY:	J. E. MONDOLFI	DATE:	11-2017
DESIGN ENGINEER OF RECORD:	J. E. MONDOLFI	DATE:	12-2017

w1570077
R:\Structures\Y5_North_Church_St\Plans\U-2525C_SMU_B1_401246.dgn
12/21/2017 3:37:57 PM