DocuSign Envelope ID: 7A047DE3-8F9A-4F1E-9B05-7E224824CE9F

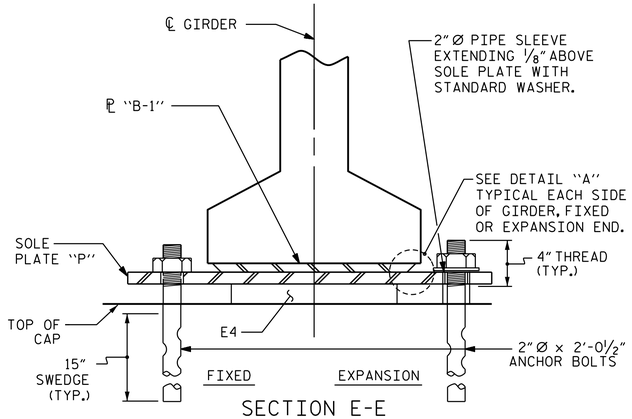

SECTION E-E

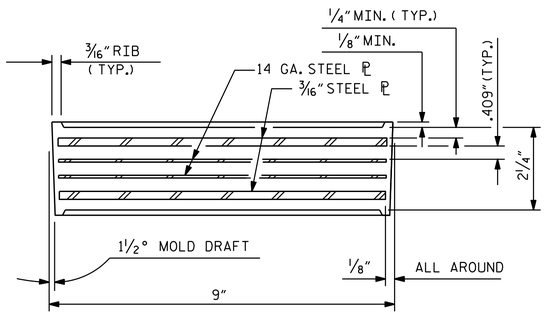

TYPICAL SECTION OF ELASTOMERIC BEARINGS

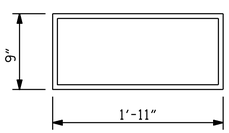

E4 (32 REQ'D)

PLAN VIEW OF ELASTOMERIC BEARING

TYPE V

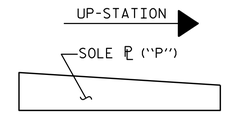

SOLE ℙ PLACEMENT DETAIL

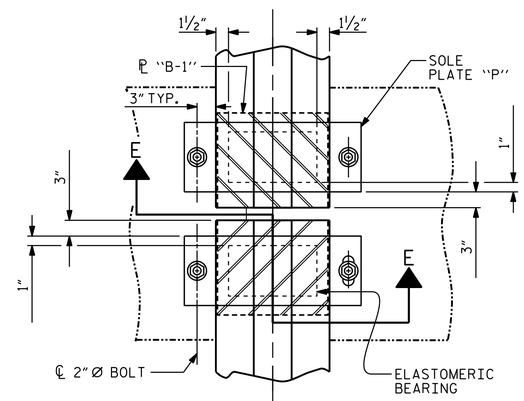

TYPICAL HALF-PLAN (SHOWING CONTINUOUS BENT)

TYPICAL HALF-PLAN (SHOWING SIMPLE SPAN BENT)

NOTES

AT ALL FIXED POINTS OF SUPPORT, NUTS FOR ANCHOR BOLTS ARE TO BE TIGHTENED FINGER TIGHT AND THEN BACKED OFF 1/2 TURN. THE THREAD OF THE NUT AND BOLT SHALL THEN BE BURRED WITH A SHARP POINTED TOOL.

THE 2"Ø PIPE SLEEVE SHALL BE CUT FROM SCHEDULE 40 PVC PLASTIC PIPE. THE PVC PLASTIC PIPE SHALL MEET THE REQUIREMENTS OF ASTM D1785.

STEEL SOLE PLATES, ANCHOR BOLTS, NUTS, AND WASHERS SHALL BE GALVANIZED IN ACCORDANCE WITH THE STANDARD SPECIFICATIONS.

PRIOR TO WELDING, GRIND THE GALVANIZED SURFACE OF THE PORTION OF THE EMBEDDED PLATE AND SOLE PLATE THAT ARE TO BE WELDED. AFTER WELDING, DAMAGED GALVANIZED SURFACES SHALL BE REPAIRED IN ACCORDANCE WITH THE STANDARD SPECIFICATIONS.

WHEN WELDING THE SOLE PLATE TO THE EMBEDDED PLATE IN THE GIRDER, USE TEMPERATURE INDICATING WAX PENS, OR OTHER SUITABLE MEANS, TO ENSURE THAT THE TEMPERATURE OF THE SOLE PLATE DOES NOT EXCEED 300°F. TEMPERATURES ABOVE THIS MAY DAMAGE THE ELASTOMER.

SOLE PLATE "P", BOLTS, NUTS, WASHERS, AND PIPE SLEEVE SHALL BE INCLUDED IN THE PAY ITEM FOR PRESTRESSED CONCRETE GIRDERS.

ANCHOR BOLTS SHALL MEET THE REQUIREMENTS OF ASTM A449. NUTS SHALL MEET THE REQUIREMENTS OF AASHTO M291-DH OR AASHTO M292-2H. WASHERS SHALL MEET THE REQUIREMENTS OF AASHTO M293. NO SHOP DRAWINGS ARE REQUIRED FOR ANCHOR BOLTS, NUTS AND WASHERS. SHOP INSPECTION IS REQUIRED.

ALL SURFACES OF BEARING PLATES SHALL BE SMOOTH AND STRAIGHT.

THE ELASTOMER IN THE STEEL REINFORCED BEARINGS SHALL HAVE A SHEAR MODULUS OF 0.160 KSI, IN ACCORDANCE WITH AASHTO M251.

FOR STEEL REINFORCED ELASTOMERIC BEARINGS, SEE SPECIAL PROVISIONS.

ALL BEARING PLATES SHALL BE AASHTO M270 GRADE 36.

MAXIMUM ALLOWABLE SERVICE LOADS	
D.L.+L.L. (NO IMPACT)	
TYPE V	365 K

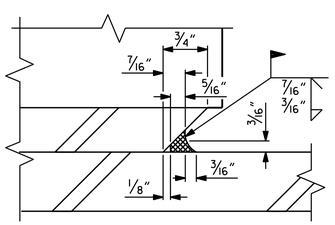

DETAIL "A"

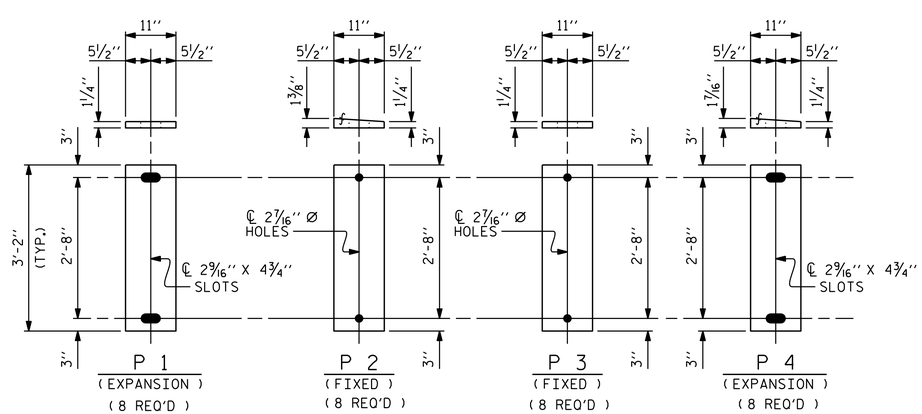

SOLE PLATE DETAILS ("P")

PROJECT NO. U-2525C
GUILFORD COUNTY
STATION: 28+98.81 -Y4-

STATE OF NORTH CAROLINA
DEPARTMENT OF TRANSPORTATION
RALEIGH

ELASTOMERIC BEARING DETAILS

PRESTRESSED CONCRETE GIRDER SUPERSTRUCTURE

DOCUMENT NOT CONSIDERED FINAL UNLESS ALL SIGNATURES COMPLETED

PLANS PREPARED BY:
MOTT MACDONALD
PO Box 700
Fuquay-Varina, NC 27526
(919) 552-2253
www.mottmac.com
LICENSE NO. F-0669

NORTH CAROLINA PROFESSIONAL SEAL 11915 ENGINEER JOHN C. FRYE
DocuSigned by: John C. Frye
9C2EF404538E4E3...
12/22/2017

REVISIONS							SHEET NO.
NO.	BY:	DATE:	NO.	BY:	DATE:		S6-14
1			3				TOTAL SHEETS
2			4				34

DRAWN BY:	L. T. FORBIS	DATE:	6-2017
CHECKED BY:	J. T. WILLIAMS	DATE:	9-2017
DESIGN ENGINEER OF RECORD:	J. E. MONDOLFI	DATE:	9-2017

w157077
R:\Structures\Y4_Yanceyville_Rd\Plans\U-2525C_SMU_BG_401245.dgn
12/21/2017
3:34:53 PM