DocuSign Envelope ID: 7DC40911-9AD0-4FD4-85A7-0389C24757B1

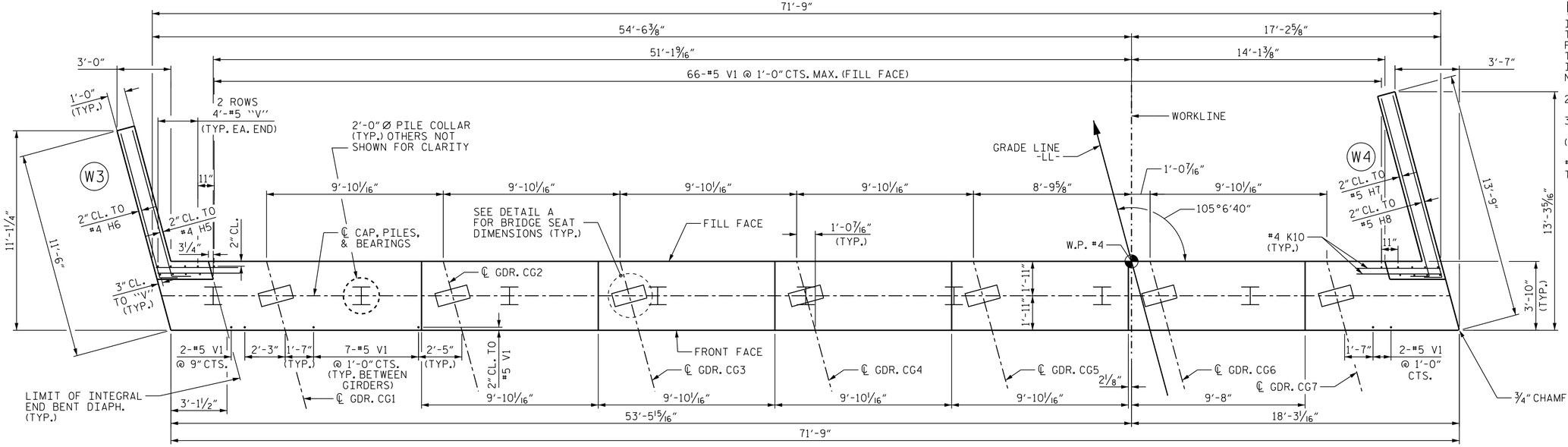

PLAN

NOTES

INSTALL THE 4" DIA. DRAIN PIPE THROUGH THE WING WALL AS REQUIRED FOR REINFORCED BRIDGE APPROACH FILLS. SEE THE ROADWAY PLANS. REINFORCING STEEL IN THE WING WALL MAY BE SHIFTED AS NECESSARY TO CLEAR THE DRAIN PIPE.

2 BR DENOTES 2 BAR RUN

3 BR DENOTES 3 BAR RUN

(EF) - DENOTES EACH FACE OF WING WALL

#4 U1 BARS CAN BE SHIFTED AS NECESSARY TO CLEAR #5 V1 BARS.

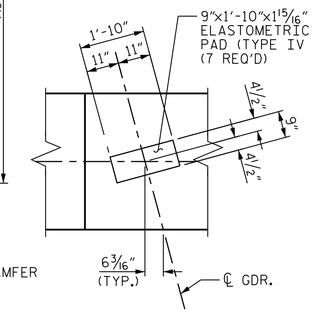

DETAIL A

FOR WING WALL DETAILS, SEE "END BENT 2, DETAILS - WING WALLS" SHT. 2 OF 3

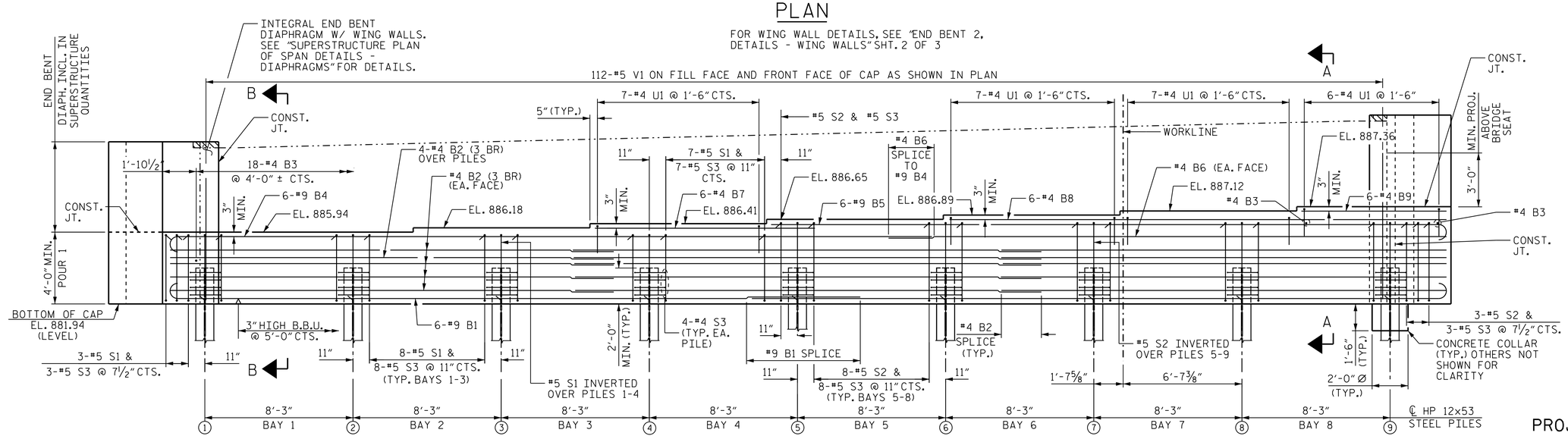

ELEVATION

SPLICE LENGTH	
#9 B1	6'-3"
#4 B2, B6	2'-5"

NOTE: HATCHED AREA OF THE BACKWALL SHALL NOT BE POURED UNTIL BARRIER RAIL HAS BEEN CAST. IF SLIP FORM CONSTRUCTION OF THE BARRIER IS USED.

PROJECT NO. U-2525C

GUILFORD COUNTY

STATION: 337+20.09 -L-

SHEET 1 OF 3

STATE OF NORTH CAROLINA
DEPARTMENT OF TRANSPORTATION
RALEIGH

SUBSTRUCTURE

END BENT 2

(LL)

Stantec
Stantec Consulting Services Inc.
801 Jones Franklin Road
Suite 300
Raleigh, NC 27606
Tel. (919) 851-6866
Fax. (919) 851-7024
www.stantec.com
License No. F-0672

DRAWN BY : J. B. GEILE DATE : 01-25-17
CHECKED BY : V. E. FRAGA DATE : 03-17-17
DESIGN ENGINEER OF RECORD: T.R. DUDECK DATE : 01/16/18

NORTH CAROLINA PROFESSIONAL SEAL 034462 ENGINEER THOMAS R. DUDECK
Docusigned by: Tommy Dudeck
4D2A...
1/16/2018

DOCUMENT NOT CONSIDERED FINAL UNLESS ALL SIGNATURES COMPLETED

REVISIONS						SHEET NO.
NO.	BY:	DATE:	NO.	BY:	DATE:	S4-33
1			3			TOTAL SHEETS
2			4			39

STR. #4

U:\Structures\Drawing\Site 5\Final\LL\U-2525C_SD_E#_2.dgn 1/12/2018 5:33:45 PM jgelie