DocuSign Envelope ID: 870633D5-7C11-40C9-8AC6-3810A6031C7F

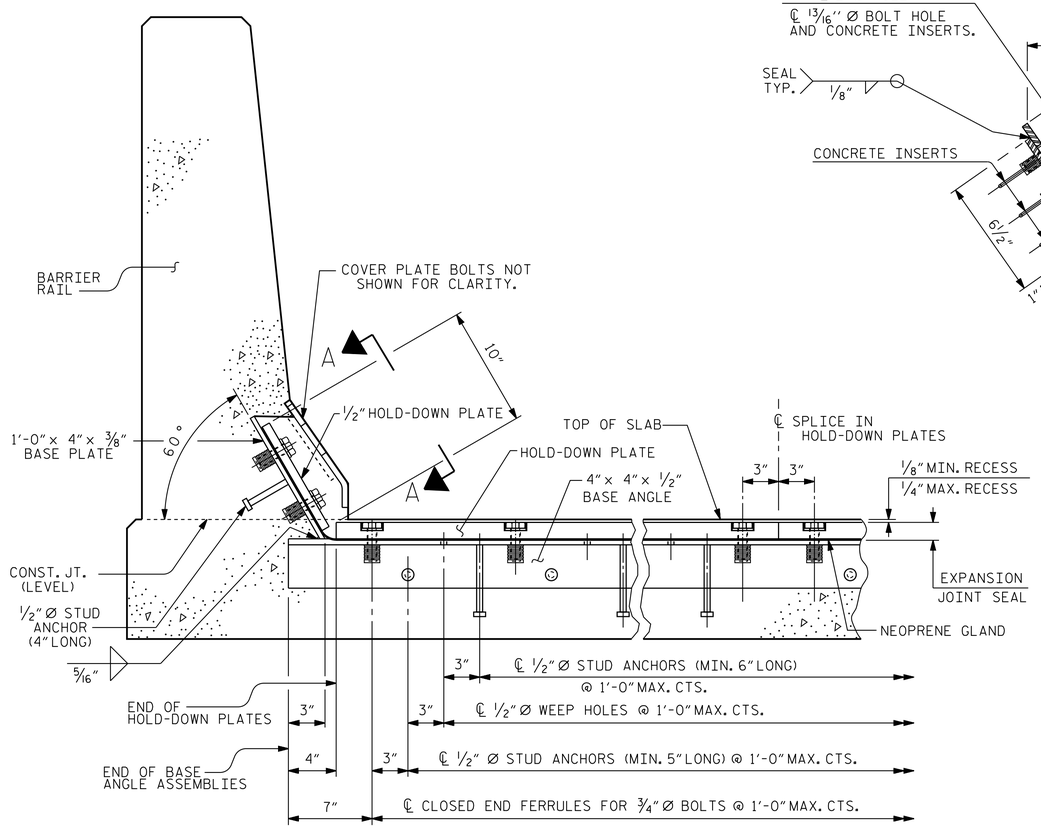

SECTION THRU RAIL NORMAL TO JOINT

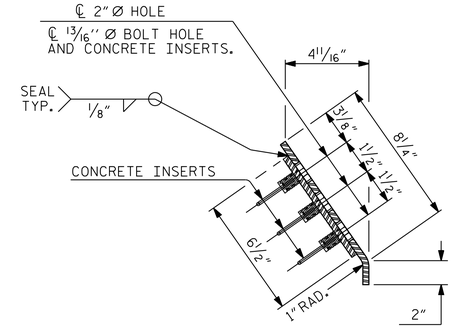

END VIEW

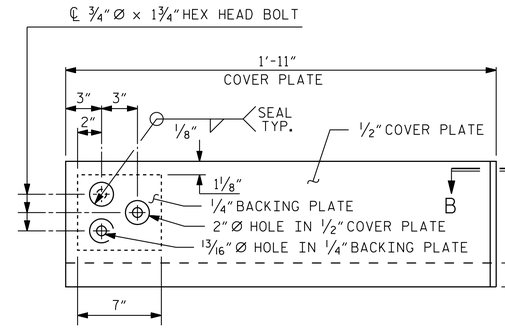

TYPE I - ELEVATION VIEW

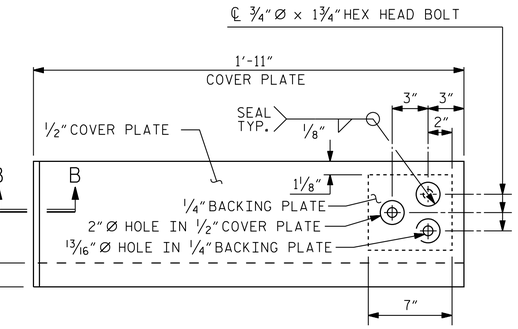

TYPE II - ELEVATION VIEW

COVER PLATE DETAILS

FOR SECTION B-B, SEE EXPANSION JOINT SEAL DETAILS FOR BARRIER RAIL, SHEET 3 OF 3

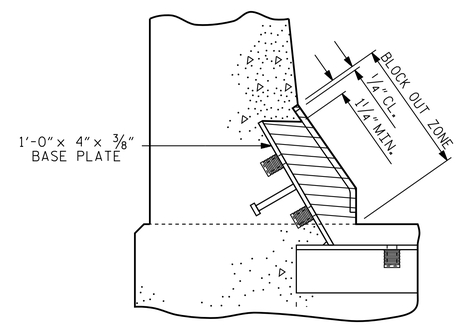

BLOCK OUT DETAIL

SEE "SECTION A-A" FOR OTHER DETAILS.

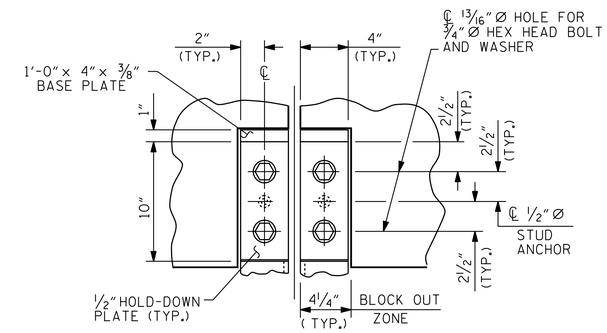

SECTION A-A

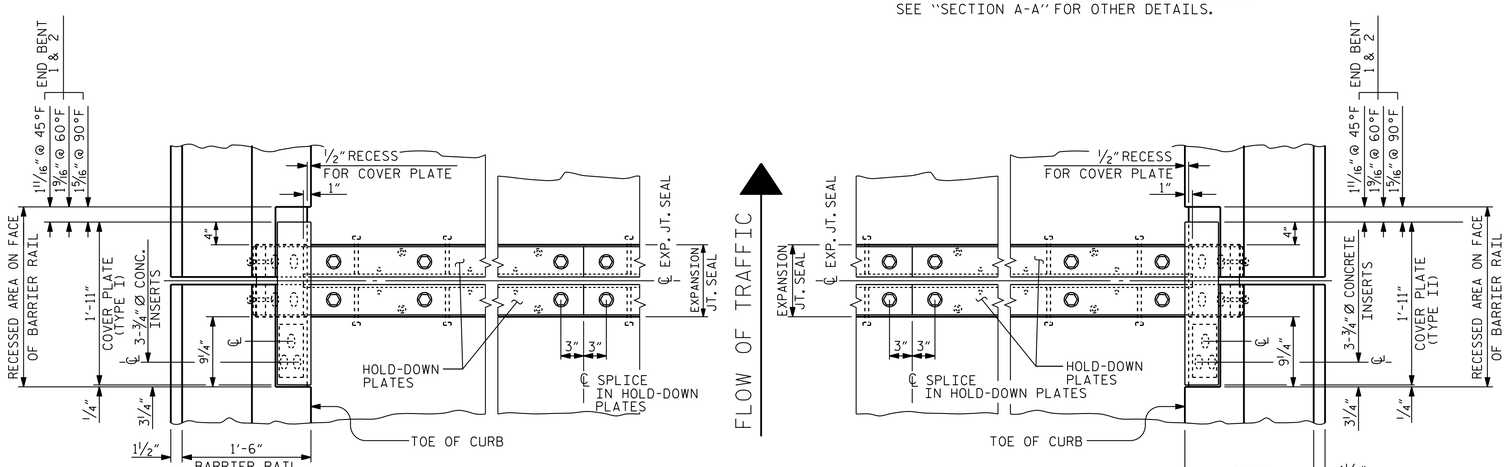

PLAN OF EXPANSION JOINT SEAL

PROJECT NO. U-2525C

GUILFORD COUNTY

STATION: 329+95.42 -L-

SHEET 2 OF 3

STATE OF NORTH CAROLINA
DEPARTMENT OF TRANSPORTATION
RALEIGH

STANDARD
EXPANSION JOINT
SEAL DETAILS
FOR BARRIER RAIL

(RL)

Stantec
Stantec Consulting Services Inc.
801 Jones Franklin Road
Suite 300
Raleigh, NC 27606
Tel. (919) 851-6866
Fax. (919) 851-7024
www.stantec.com
License No. F-0672

DRAWN BY : J. HAGENBUSH	DATE : 12/09/16	DESIGN ENGINEER OF RECORD: T. R. DUDECK	DATE : 01/12/18
CHECKED BY : N. D'AIUTO	DATE : 01/03/17		

Documents Signed by: SEAL
Tommy R. Dudeck 42862
1/12/2018

DOCUMENT NOT CONSIDERED FINAL UNLESS ALL SIGNATURES COMPLETED

REVISIONS						SHEET NO.
NO.	BY:	DATE:	NO.	BY:	DATE:	S3-18
1			3			TOTAL SHEETS
2			4			29

STR. #3

STD. NO. EJS2

U:\Structures\Drawing\Site 4\WBL_RL\U-2525C_SD_EJS_2.dgn 1/9/2018 10:48:13 AM jgelle