DocuSign Envelope ID: 549A3651-6B56-42E7-975F-2FDAF20FF2A0

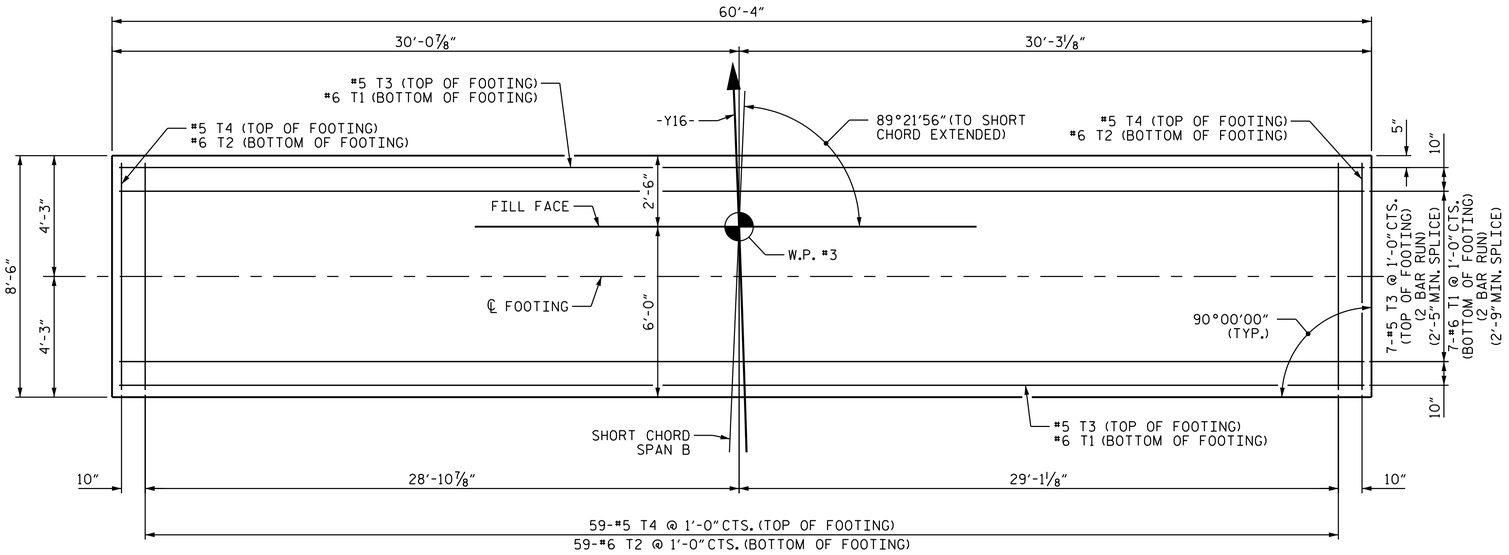

PLAN OF FOOTING

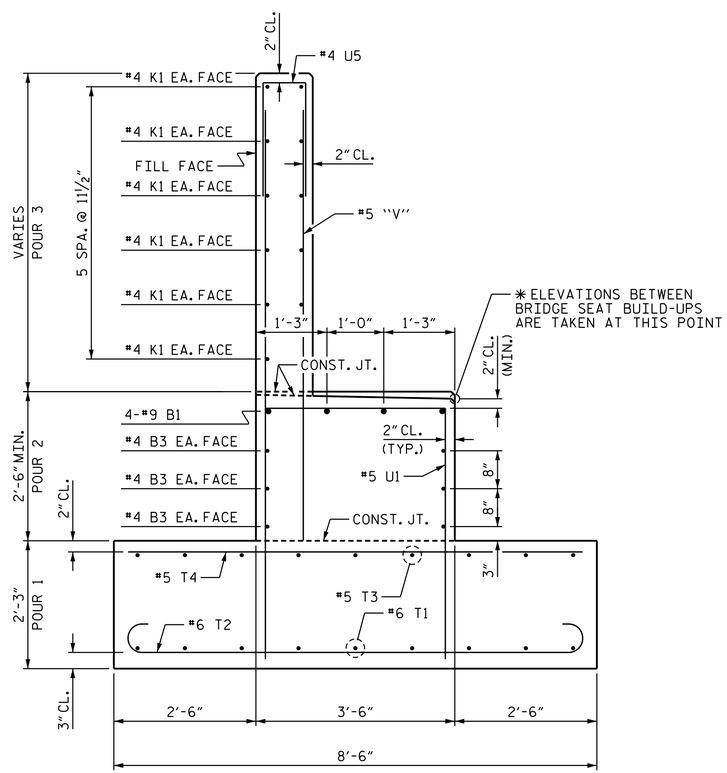

SECTION A-A

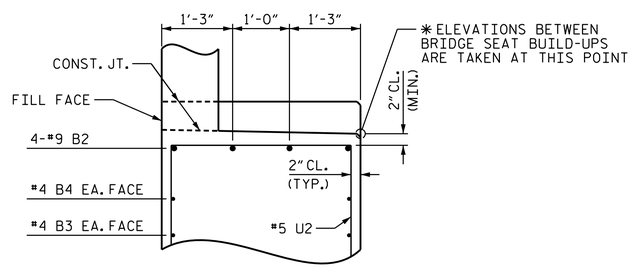

SECTION B-B

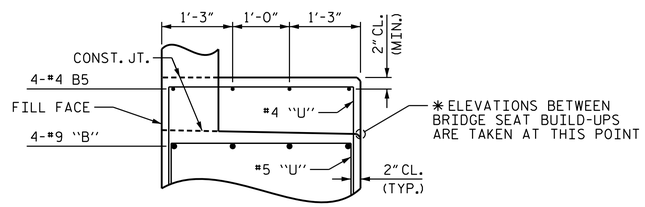

SECTION C-C

BAR TYPES

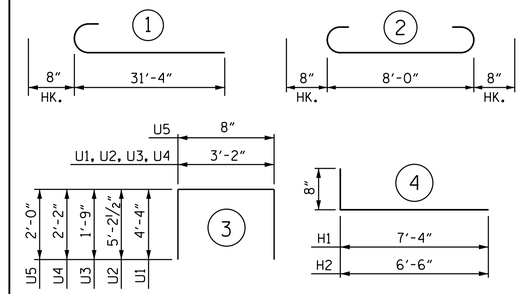

ALL BAR DIMENSIONS ARE OUT TO OUT

BILL OF MATERIAL

END BENT 2

BAR	NO.	SIZE	TYPE	LENGTH	WEIGHT
B1	4	#9	STR	36'-2"	492
B2	4	#9	STR	29'-7"	402
B3	12	#4	STR	29'-9"	238
B4	2	#4	STR	23'-3"	31
B5	12	#4	STR	3'-4"	27
B6	1	#4	STR	3'-2"	2
H1	24	#4	4	8'-0"	128
H2	28	#4	4	7'-2"	134
K1	24	#4	STR	29'-9"	477
K2	4	#4	STR	2'-11"	8
K3	4	#4	STR	3'-1"	8
K4	2	#4	STR	3'-11"	5
T1	18	#6	1	32'-0"	865
T2	61	#6	2	9'-4"	855
T3	18	#5	STR	31'-2"	585
T4	61	#5	STR	8'-0"	509
U1	27	#5	3	11'-10"	333
U2	30	#5	3	13'-7"	425
U3	14	#4	3	6'-8"	62
U4	7	#4	3	7'-6"	35
U5	51	#4	3	4'-8"	159
V1	34	#5	STR	7'-6"	266
V2	34	#5	STR	8'-3"	293
V3	34	#5	STR	8'-11"	316
V4	20	#4	STR	9'-3"	124
V5	24	#4	STR	11'-3"	180
V6	2	#4	STR	13'-3"	18
REINFORCING STEEL				=	6,977 LBS

CLASS A CONCRETE:

POUR #1: FOOTING	42.7 CY
POUR #2: CAP & BOTTOM OF WINGS	24.3 CY
POUR #3: BACKWALL & TOP OF WINGS	15.9 CY
CLASS A CONCRETE TOTAL:	82.9 CY

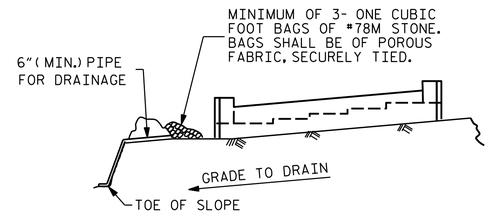

BAGGED STONE AND PIPE SHALL BE PLACED IMMEDIATELY AFTER COMPLETION OF END BENT EXCAVATION. PIPE MAY BE EITHER CONCRETE, CORRUGATED STEEL, CORRUGATED ALUMINUM ALLOY, OR CORRUGATED PLASTIC. PERFORATED PIPE WILL NOT BE ALLOWED.

BAGGED STONE SHALL REMAIN IN PLACE UNTIL THE ENGINEER DIRECTS THAT IT BE REMOVED. THE CONTRACTOR SHALL REMOVE AND DISPOSE OF SILT ACCUMULATIONS AT BAGGED STONE WHEN SO DIRECTED BY THE ENGINEER. BAGS SHALL BE REMOVED AND REPLACED WHENEVER THE ENGINEER DETERMINES THAT THEY HAVE DETERIORATED AND LOST THEIR EFFECTIVENESS.

NO SEPARATE PAYMENT WILL BE MADE FOR THIS WORK AND THE ENTIRE COST OF THIS WORK SHALL BE INCLUDED IN THE UNIT CONTRACT PRICE BID FOR THE SEVERAL PAY ITEMS.

TEMPORARY DRAINAGE AT END BENT

PROJECT NO. U-2525C
GUILFORD COUNTY
STATION: 17+37.28 -Y16-

SHEET 3 OF 3

STATE OF NORTH CAROLINA
DEPARTMENT OF TRANSPORTATION
RALEIGH

SUBSTRUCTURE

END BENT 2

DOCUMENT NOT CONSIDERED FINAL UNLESS ALL SIGNATURES COMPLETED

PLANS PREPARED BY:
MOTT MACDONALD
PO Box 700
Fuquay-Varina, NC 27526
(919) 552-2253
www.mottmac.com
LICENSE NO. F-0669

NORTH CAROLINA PROFESSIONAL SEAL 11915 ENGINEER JOHN C. FRYE

DocuSigned by: John C. Frye
9C2EF404538E4E3...
12/22/2017

REVISIONS							SHEET NO.
NO.	BY:	DATE:	NO.	BY:	DATE:		S1-26
1			3				TOTAL SHEETS
2			4				29

DRAWN BY: J. T. WILLIAMS DATE: 9-2017
CHECKED BY: J. E. MONDOLFI DATE: 10-2017
DESIGN ENGINEER OF RECORD: J. E. MONDOLFI DATE: 11-2017

w:\157077 R:\Structures\Y16_Summit_Ave\Plans\U-2525C_SMU_E2_401240.dgn 12/21/2017 3:33:15 PM