STATE OF
NORTH CAROLINA
DEPT. OF TRANSPORTATION
DIVISION OF HIGHWAYS
RALEIGH, N.C.

ENGLISH DETAIL DRAWING FOR

SIDE BY SIDE HOODED CATCH BASIN WITH DOUBLE SIZE BOX

SHEET 1 OF 1

84002dbl

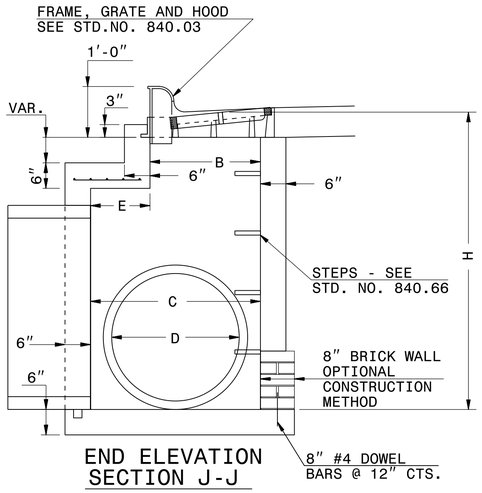

END ELEVATION
SECTION J-J

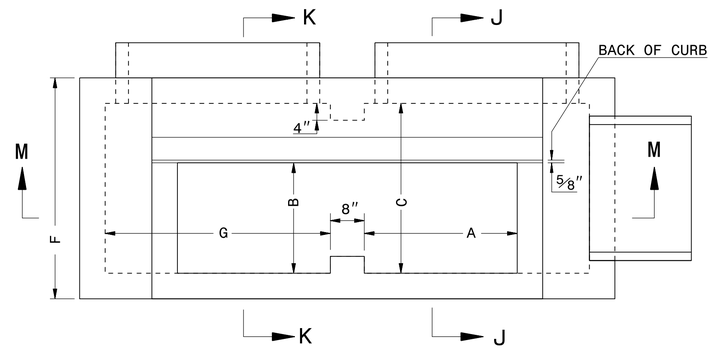

PLAN

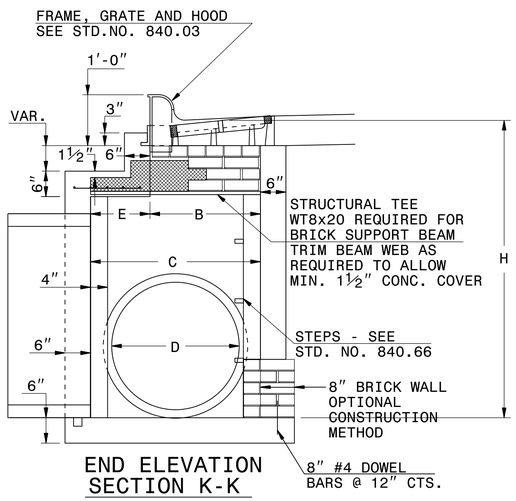

END ELEVATION
SECTION K-K

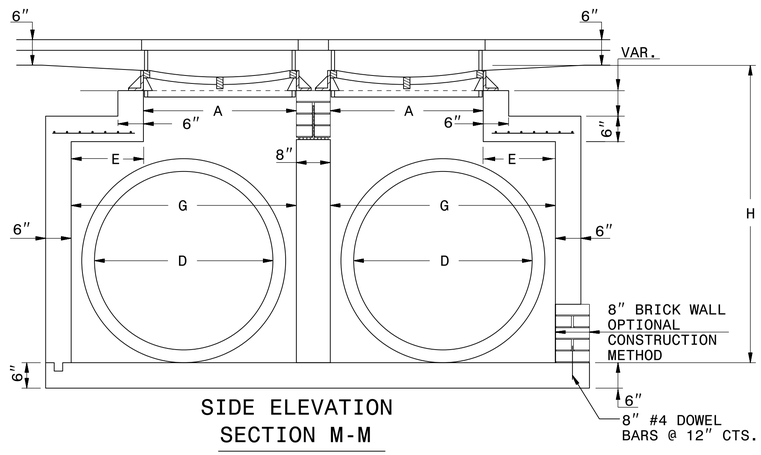

SIDE ELEVATION
SECTION M-M

GENERAL NOTES:

CLASS "B" CONCRETE TO BE USED THROUGHOUT.

ALL CATCH BASINS OVER 3'-6" IN DEPTH WILL BE PROVIDED WITH STEPS ON 12" CENTERS. SEE STD. DWG. NO. 840.66.

OPTIONAL CONSTRUCTION - MONOLITHIC POUR 2" KEY WAY OR #4 BAR DOWELS AT 12" CENTERS AND AS DIRECTED BY THE ENGINEER.

FORMS WILL BE USED IN THE CONSTRUCTION OF THE BOTTOM SLAB.

IF THE PIPE IS SET IN THE BASE SLAB OF THE BOX ADD TO THE BASE AS SHOWN ON STD DWG. NO. 840.00. USE TYPE "E", "F" AND "G" GRATES UNLESS OTHERWISE INDICATED.

WHEN BOX DEPTH IS 8' OR LESS USE 6" WALLS AND BOTTOM SLAB. WHEN DEPTH IS 8' TO 16' USE 8" WALLS AND BOTTOM SLAB. QUANTITIES SHALL BE ADJUSTED ACCORDINGLY.

SEE SHEET 2 OF STD. DWG. NO. 840.02 FOR DIMENSIONS.

SEE STD. DWG. NO. 840.01 FOR BRICK MASONRY CONSTRUCTION INFORMATION.

STATE OF
NORTH CAROLINA
DEPT. OF TRANSPORTATION
DIVISION OF HIGHWAYS
RALEIGH, N.C.

ENGLISH DETAIL DRAWING FOR

SIDE BY SIDE HOODED CATCH BASIN WITH DOUBLE SIZE BOX

SHEET 1 OF 1

84002dbl

12/5/2017

NORTH CAROLINA PROFESSIONAL SEAL 022966 ENGINEER Joel S. Howerton

DocuSigned by: Joel S. Howerton
873F3D17DCDC45F...

CONTRACT STANDARDS AND DEVELOPMENT UNIT
Office 919-707-6950 FAX 919-250-4119

SEE PLATE FOR TITLE

ORIGINAL BY: L.E.Robinson DATE: May 1993
MODIFIED BY: E.E. Ward DATE: Oct. 2004
CHECKED BY: DATE:
FILE SPEC: usr/details/stand/840d02 Double CB.dgn

5/14/99
$$$$SYSTEM$$$$
$$$$USERNAME$$$$
$$$$DGN$$$$