DocuSign Envelope ID: 3A4D0F7A-B2E8-4708-A87D-4003DA39697E

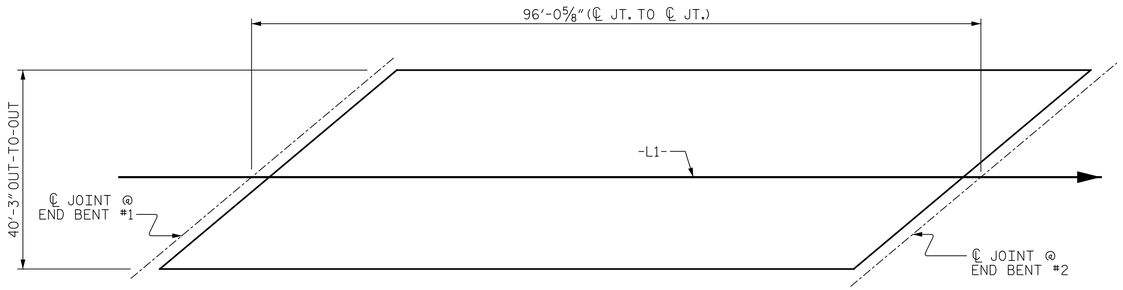

LAYOUT FOR COMPUTING AREA
REINFORCED CONCRETE DECK SLAB
(SQ. FT. = 3866)

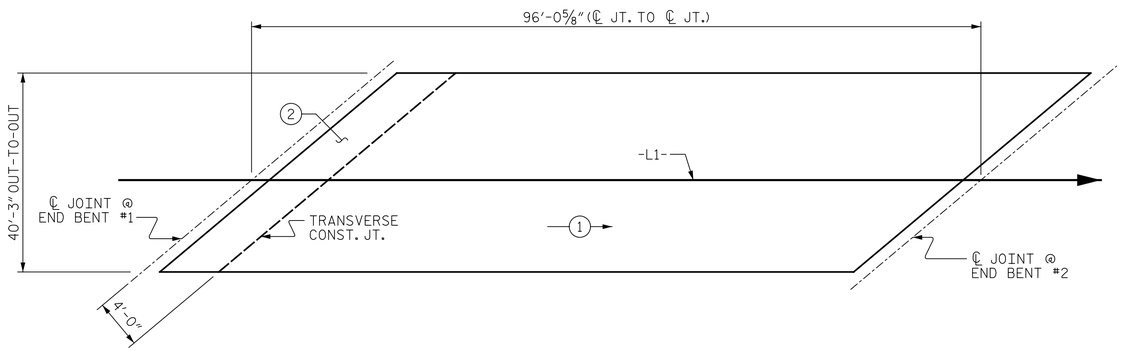

SPAN A

POURING SEQUENCE

IF THE CONTRACTOR CHOOSES TO REVERSE THE DIRECTION OF POUR #1, A CONSTRUCTION JOINT WILL BE REQUIRED 4'-0" FROM THE JOINT SEAL.

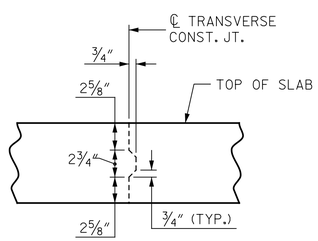

TRANSVERSE CONSTRUCTION JOINT DETAIL

NOTE: REINFORCING STEEL IN SLAB NOT SHOWN. LONGITUDINAL REINFORCING STEEL SHALL BE CONTINUOUS THRU JOINT

REINFORCING BAR SCHEDULE

BAR	NO.	SIZE	TYPE	LENGTH	WEIGHT	BAR	NO.	SIZE	TYPE	LENGTH	WEIGHT
✳ A1	113	#5	STR	39'-11"	4705	A201	4	#5	STR	38'-7"	161
A2	113	#5	STR	39'-11"	4705	A202	4	#5	STR	37'-7"	157
✳ A3	6	#6	STR	15'-0"	136	A203	4	#5	STR	36'-7"	153
						A204	4	#5	STR	35'-7"	148
✳ A101	4	#5	STR	38'-7"	161	A205	4	#5	STR	34'-7"	144
✳ A102	4	#5	STR	37'-7"	157	A206	4	#5	STR	33'-7"	140
✳ A103	4	#5	STR	36'-7"	153	A207	4	#5	STR	32'-7"	136
✳ A104	4	#5	STR	35'-7"	148	A208	4	#5	STR	31'-7"	132
✳ A105	4	#5	STR	34'-7"	144	A209	4	#5	STR	30'-7"	128
✳ A106	4	#5	STR	33'-7"	140	A210	4	#5	STR	29'-7"	123
✳ A107	4	#5	STR	32'-7"	136	A211	4	#5	STR	28'-7"	119
✳ A108	4	#5	STR	31'-7"	132	A212	4	#5	STR	27'-7"	115
✳ A109	4	#5	STR	30'-7"	128	A213	4	#5	STR	26'-7"	111
✳ A110	4	#5	STR	29'-7"	123	A214	4	#5	STR	25'-7"	107
✳ A111	4	#5	STR	28'-7"	119	A215	4	#5	STR	24'-7"	103
✳ A112	4	#5	STR	27'-7"	115	A216	4	#5	STR	23'-7"	98
✳ A113	4	#5	STR	26'-7"	111	A217	4	#5	STR	22'-7"	94
✳ A114	4	#5	STR	25'-7"	107	A218	4	#5	STR	21'-7"	90
✳ A115	4	#5	STR	24'-7"	103	A219	4	#5	STR	20'-7"	86
✳ A116	4	#5	STR	23'-7"	98	A220	4	#5	STR	19'-7"	82
✳ A117	4	#5	STR	22'-7"	94	A221	4	#5	STR	18'-7"	78
✳ A118	4	#5	STR	21'-7"	90	A222	4	#5	STR	17'-7"	73
✳ A119	4	#5	STR	20'-7"	86	A223	4	#5	STR	16'-7"	69
✳ A120	4	#5	STR	19'-7"	82	A224	4	#5	STR	15'-7"	65
✳ A121	4	#5	STR	18'-7"	78	A225	4	#5	STR	14'-7"	61
✳ A122	4	#5	STR	17'-7"	73	A226	4	#5	STR	13'-7"	57
✳ A123	4	#5	STR	16'-7"	69	A227	4	#5	STR	12'-7"	53
✳ A124	4	#5	STR	15'-7"	65	A228	4	#5	STR	11'-7"	48
✳ A125	4	#5	STR	14'-7"	61	A229	4	#5	STR	10'-7"	44
✳ A126	4	#5	STR	13'-7"	57	A230	4	#5	STR	9'-7"	40
✳ A127	4	#5	STR	12'-7"	53	A231	4	#5	STR	8'-7"	36
✳ A128	4	#5	STR	11'-7"	48	A232	4	#5	STR	7'-7"	32
✳ A129	4	#5	STR	10'-7"	44	A233	4	#5	STR	6'-7"	27
✳ A130	4	#5	STR	9'-7"	40	A234	4	#5	STR	5'-7"	23
✳ A131	4	#5	STR	8'-7"	36	A235	4	#5	STR	4'-7"	19
✳ A132	4	#5	STR	7'-7"	32	A236	4	#5	STR	3'-7"	15
✳ A133	4	#5	STR	6'-7"	27	A237	4	#5	STR	2'-7"	11
✳ A134	4	#5	STR	5'-7"	23	A238	4	#5	STR	1'-7"	7
✳ A135	4	#5	STR	4'-7"	19						
✳ A136	4	#5	STR	3'-7"	15	✳ B1	108	#4	STR	25'-5"	1834
✳ A137	4	#5	STR	2'-7"	11	B2	102	#5	STR	49'-0"	5213
✳ A138	4	#5	STR	1'-7"	7						
						✳ G1	2	#5	STR	56'-5"	118
						✳ K1	12	#5	1	6'-6"	81
						✳ K2	24	#5	2	6'-8"	167
						✳ K3	30	#5	STR	7'-11"	248
						✳ S1	60	#4	3	4'-7"	184

REINFORCING STEEL = 13,103
✳ EPOXY COATED REINF. STEEL = 10,658

GROOVING BRIDGE FLOORS

BRIDGE DECK	3360	SQ. FT.
APPROACH SLABS	1579	SQ. FT.
TOTAL	4939	SQ. FT.

BAR TYPES

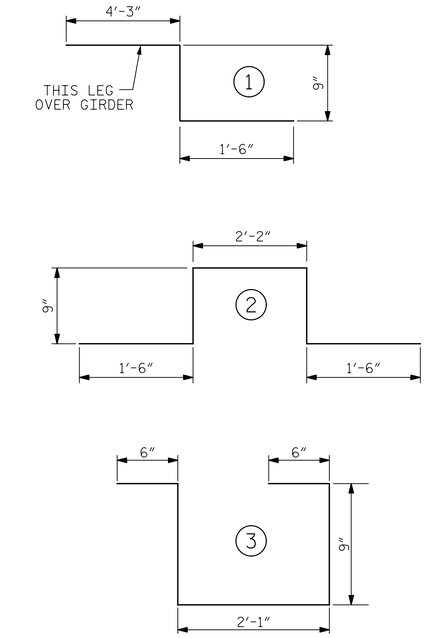

ALL BAR DIMENSIONS ARE OUT TO OUT

SUPERSTRUCTURE BILL OF MATERIAL

	CLASS AA CONCRETE	REINFORCING STEEL	✳ EPOXY COATED REINFORCING STEEL
	(CU. YDS.)	(LBS.)	(LBS.)
TOTALS	105.9	13103	10658

SUPERSTRUCTURE REINFORCING STEEL LENGTHS ARE BASED ON THE FOLLOWING MINIMUM SPLICE LENGTHS

BAR SIZE	SUPERSTRUCTURE EXCEPT APPROACH SLABS, PARAPET, AND BARRIER RAIL		APPROACH SLABS		PARAPET AND BARRIER RAIL
	EPOXY COATED	UNCOATED	EPOXY COATED	UNCOATED	
#4	2'-0"	1'-9"	2'-0"	1'-9"	2'-9"
#5	2'-6"	2'-2"	2'-6"	2'-2"	3'-5"
#6	3'-0"	2'-7"	3'-10"	2'-7"	4'-4"

PROJECT NO. 41665.7A
CUMBERLAND COUNTY
STATION: 106+59.74 -L1-
14+51.19 -Y-

NORTH CAROLINA PROFESSIONAL SEAL 037180 ENGINEER RICHARD F. WERTMAN

DocuSigned by: Richard F. Wertman
C8B0148BEE8A470...
11/7/2017

STATE OF NORTH CAROLINA
DEPARTMENT OF TRANSPORTATION
RALEIGH

SUPERSTRUCTURE

BILL OF MATERIAL

PLANS PREPARED BY:
Gannett Fleming
Excellence Delivered As Promised
2610 Wycliff Road
Suite 102
Raleigh NC 27607-3073
(919) 420-7660
NC Lic. No. F-0270

DOCUMENT NOT CONSIDERED FINAL UNLESS ALL SIGNATURES COMPLETED

REVISIONS						
NO.	BY:	DATE:	NO.	BY:	DATE:	
1			3			
2			4			

SHEET NO. S02-15
TOTAL SHEETS 24

ASSEMBLED BY : B.A. WHITE		DATE : 10/12/17	
CHECKED BY : R.F. WERTMAN		DATE : 10/15/17	
DRAWN BY : JMB 5/87	REV. 8/16/99	RWW/LES	
CHECKED BY : SJD 9/87	REV. 5/1/06	TLA/GM	
	REV. 10/1/11	MAA/GM	

STR. NO. 2 STD. NO. BOM1