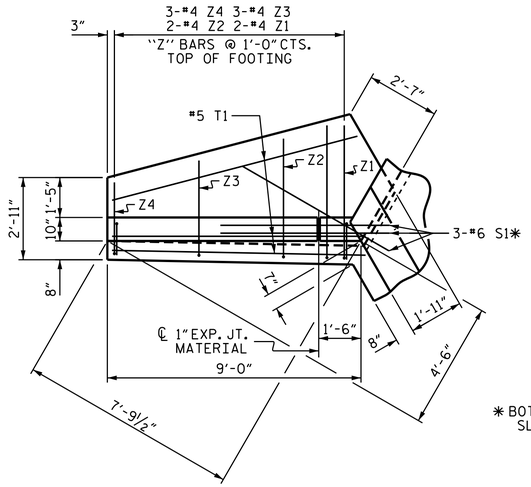

PLAN W2

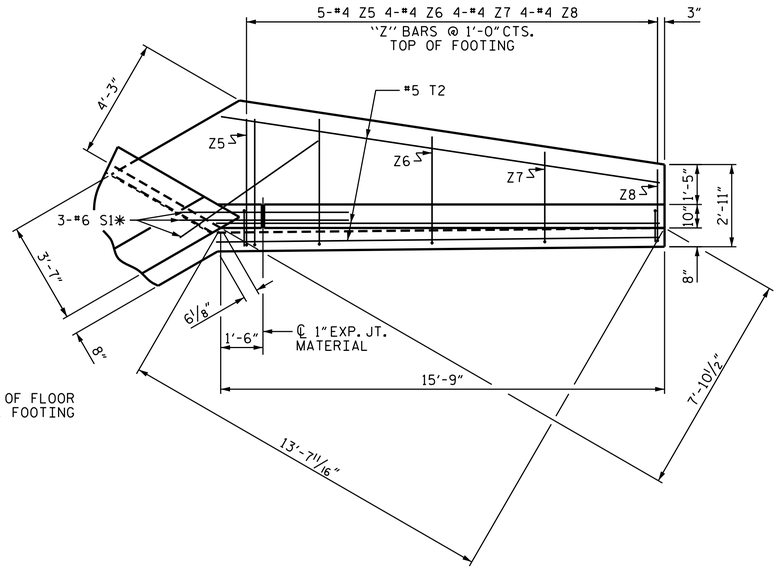

PLAN W1

* BOTTOM OF FLOOR SLAB & FOOTING

A 3 FOOT STRIP OF FILTER FABRIC SHALL BE ATTACHED TO THE FILL FACE OF THE WING COVERING THE ENTIRE LENGTH OF THE EXPANSION JOINT.

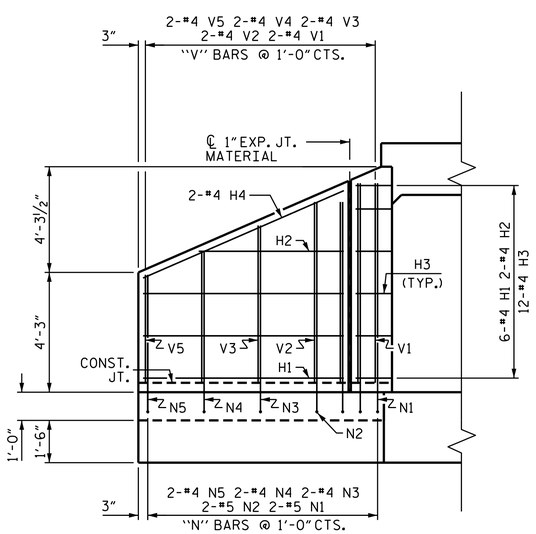

ELEVATION W2

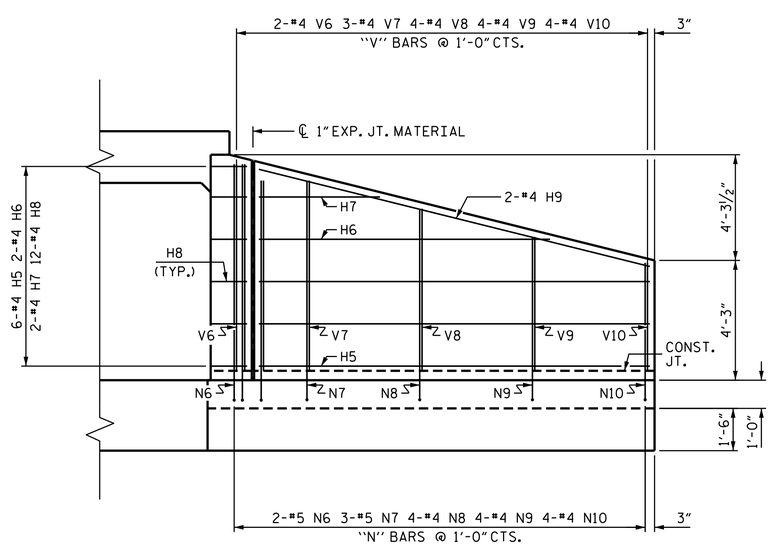

ELEVATION W1

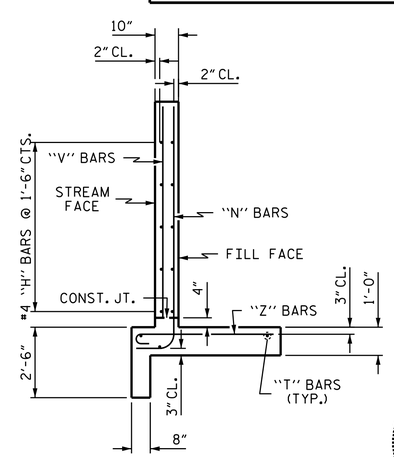

TYPICAL WING SECTION

BAR TYPES

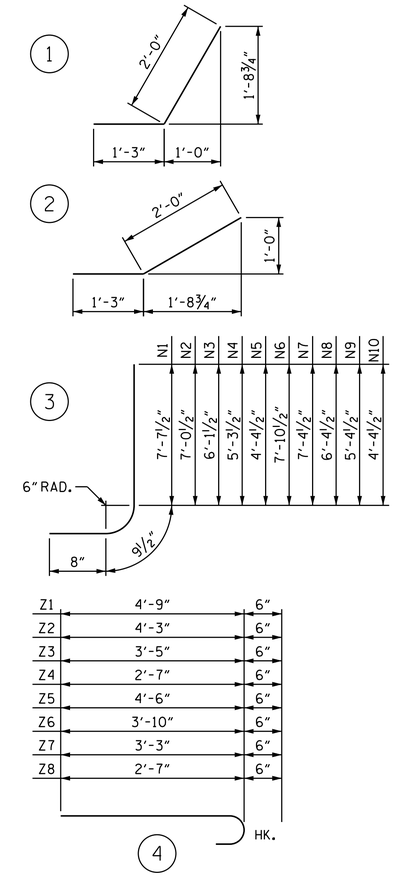

ALL BAR DIMENSIONS ARE OUT TO OUT.

BILL OF MATERIAL

BAR	NO.	SIZE	TYPE	LENGTH	WEIGHT
H1	12	#4	STR	7'-1"	57
H2	4	#4	STR	5'-2"	14
H3	24	#4	1	3'-3"	52
H4	4	#4	STR	7'-9"	21
H5	12	#4	STR	13'-10"	111
H6	4	#4	STR	10'-4"	28
H7	4	#4	STR	4'-3"	11
H8	24	#4	2	3'-3"	52
H9	4	#4	STR	14'-3"	38
N1	4	#5	3	9'-1"	38
N2	4	#5	3	8'-6"	35
N3	4	#4	3	7'-7"	20
N4	4	#4	3	6'-9"	18
N5	4	#4	3	5'-10"	16
N6	4	#5	3	9'-4"	39
N7	6	#5	3	8'-10"	55
N8	8	#4	3	7'-10"	42
N9	8	#4	3	6'-10"	37
N10	8	#4	3	5'-10"	31
S1	12	#6	STR	6'-0"	108
T1	6	#5	STR	9'-0"	56
T2	6	#5	STR	15'-9"	99
V1	4	#4	STR	7'-1"	19
V2	4	#4	STR	6'-5"	17
V3	4	#4	STR	5'-7"	15
V4	4	#4	STR	4'-8"	12
V5	4	#4	STR	3'-10"	10
V6	4	#4	STR	7'-4"	20
V7	6	#4	STR	6'-9"	27
V8	8	#4	STR	5'-9"	31
V9	8	#4	STR	4'-9"	25
V10	8	#4	STR	3'-10"	20
Z1	4	#4	4	5'-3"	14
Z2	4	#4	4	4'-9"	13
Z3	6	#4	4	3'-11"	16
Z4	6	#4	4	3'-1"	12
Z5	10	#4	4	5'-0"	33
Z6	8	#4	4	4'-4"	23
Z7	8	#4	4	3'-9"	20
Z8	8	#4	4	3'-1"	16

REINFORCING STEEL FOR 4 WINGS — LBS. 1,321

CLASS A CONCRETE		
4 WINGS	C.Y.	19.8
2 HEADWALLS	C.Y.	0.9
2 END CURTAIN WALLS	C.Y.	0.7
TOTAL	C.Y.	21.4

PROJECT NO. U-2579C

FORSYTH COUNTY

STATION: 397+73.00 -L-

SHEET 5 OF 5

STATE OF NORTH CAROLINA
DEPARTMENT OF TRANSPORTATION
RALEIGH

STANDARD WINGS FOR CONCRETE BOX CULVERT

H = 7'-0" SLOPE = 2:1

60° OR 120° SKEW

NORTH CAROLINA PROFESSIONAL SEAL 20125 ENGINEER MARSHALL G. CHECK, JR.

DocuSigned by: Marshall G. Check, Jr. 6549D6EBAA3B405...

7/27/2017

DOCUMENT NOT CONSIDERED FINAL UNLESS ALL SIGNATURES COMPLETED

REVISIONS							SHEET NO.
NO.	BY:	DATE:	NO.	BY:	DATE:		C1-5
1			3				TOTAL SHEETS
2			4				5

STR. #5 STD. NO. CW6007

ASSEMBLED BY :	N.D'AIUTO	DATE :	3/31/16
CHECKED BY :	H.A.LOCKLEAR	DATE :	4/6/16
DRAWN BY :	CCJ		11/99
CHECKED BY :	RWW		03/00

26-JUL-2017 15:10
R:\Structures\FINAL PLANS\411_009_U2579C_SMU_CU_005_330000.dgn
mcheek