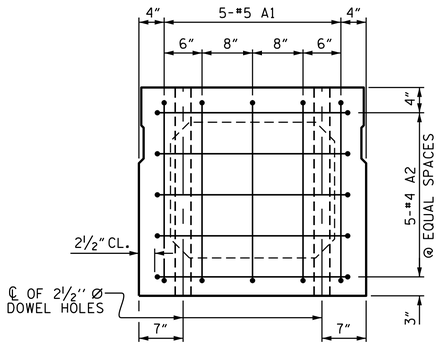

END ELEVATION

SHOWING PLACEMENT OF #5 & #4 "A" BARS AND LOCATION OF DOWEL HOLES. (INTERIOR BOX BEAM SECTION SHOWN-EXTERIOR SECTION SIMILAR EXCEPT SHEAR KEY LOCATION. STRAND LAYOUT NOT SHOWN.)

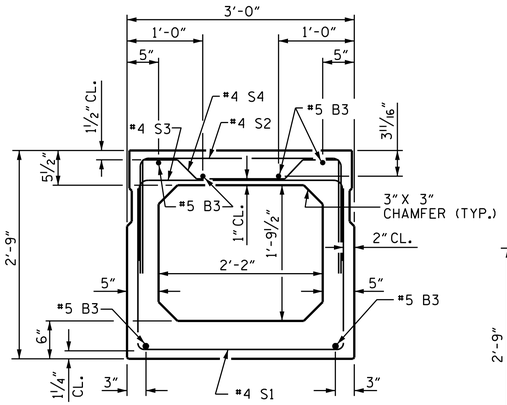

INTERIOR BOX BEAM SECTION

(STRAND LAYOUT NOT SHOWN)

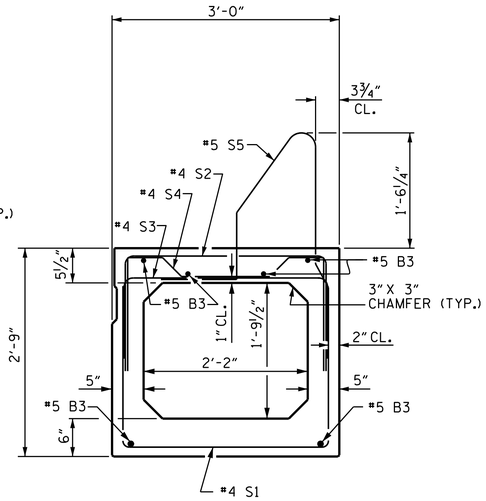

EXTERIOR BOX BEAM SECTION

(STRAND LAYOUT NOT SHOWN)

0.6" Ø LOW RELAXATION STRAND LAYOUT

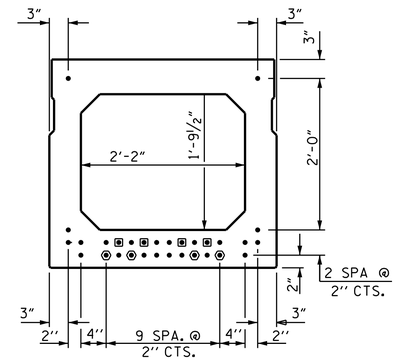

TYPICAL STRAND LOCATION

(30 STRANDS REQUIRED)

DEBONDING LEGEND

- ● FULLY BONDED STRANDS
- ▣ STRANDS DEBONDED FOR 4'-0" FROM END OF GIRDER
- ⬢ STRANDS DEBONDED FOR 12'-0" FROM END OF GIRDER

BOND SHALL BE BROKEN ON STRANDS AS SHOWN FOR THE SPECIFIED LENGTH FROM EACH END OF THE BOX BEAM. SEE STANDARD SPECIFICATIONS ARTICLE 1078-7.

BAR TYPES

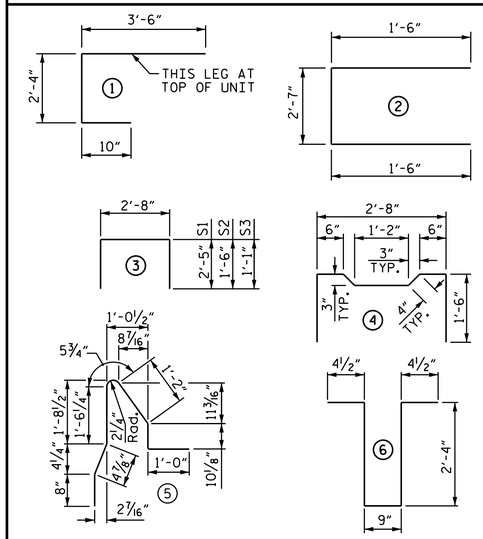

ALL BAR DIMENSIONS ARE OUT TO OUT

BILL OF MATERIAL FOR ONE BOX BEAM SECTION

				EXTERIOR UNIT		INTERIOR UNIT	
BAR	NUMBER	SIZE	TYPE	LENGTH	WEIGHT	LENGTH	WEIGHT
A1	10	#5	1	6'-8"	70	6'-8"	70
A2	34	#4	2	5'-7"	127	5'-7"	127
B3	12	#5	STR	43'-5"	543	43'-5"	543
K1	12	#4	6	6'-2"	49	6'-2"	49
K2	8	#4	STR	2'-7"	14	2'-7"	14
S1	71	#4	3	7'-6"	356	7'-6"	356
S2	71	#4	3	5'-8"	269	5'-8"	269
S3	121	#4	3	4'-10"	391	4'-10"	391
S4	50	#4	4	5'-10"	195	5'-10"	195
✳ S5	112	#5	5	6'-1"	711	--	--
REINFORCING STEEL				2014	LBS.	2014	LBS.
✳ EPOXY COATED REINF. STEEL				711	LBS.		
8000 P.S.I. CONCRETE				15.1	CU. YDS.	15.0	CU. YDS.
0.6" Ø L.R. STRANDS				No. 30		No. 30	

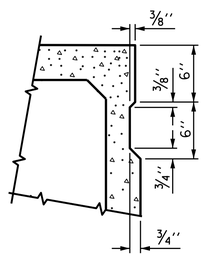

SHEAR KEY DETAIL

NOTE: OMIT SHEAR KEY ON OUTSIDE FACE OF EXTERIOR BOX BEAMS.

GRADE 270 STRANDS	
	0.6" Ø L.R.
AREA (SQUARE INCHES)	0.217
ULTIMATE STRENGTH (LBS. PER STRAND)	58,600
APPLIED PRESTRESS (LBS. PER STRAND)	43,950

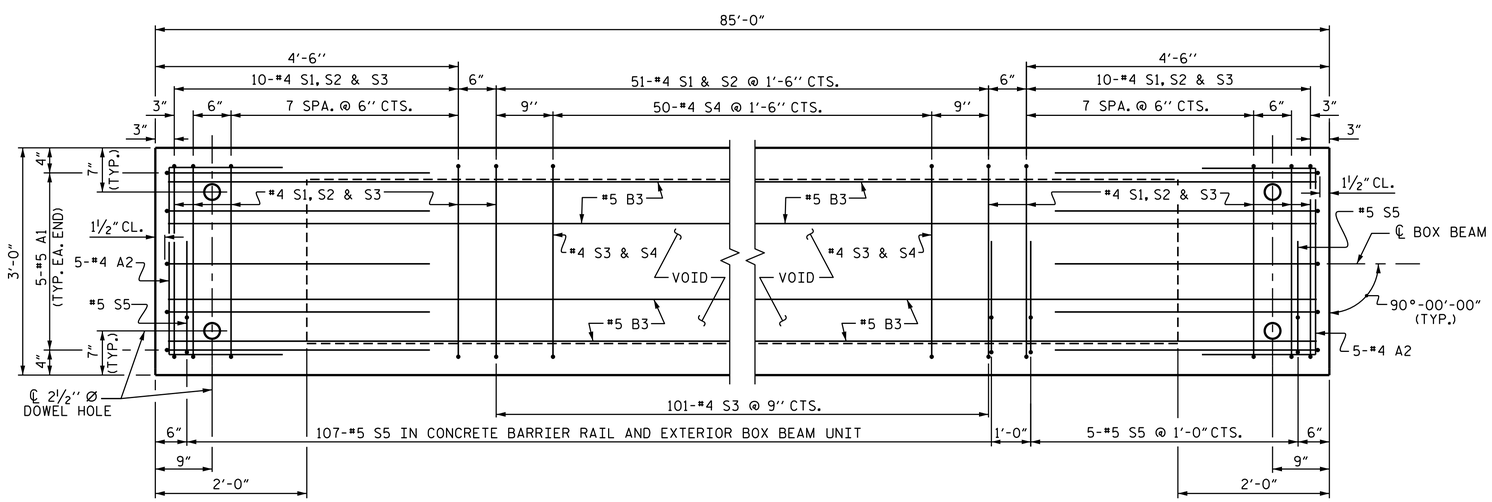

PLAN OF BOX BEAM

EXTERIOR UNIT SHOWN, INTERIOR UNIT SIMILAR EXCEPT OMIT #5 S5 BARS.
FOR LOCATION OF DIAPHRAGMS, SEE "PLAN OF UNIT".
FOR THREADED INSERTS, SEE "THREADED INSERT DETAIL".
FOR REINFORCING STEEL IN DIAPHRAGMS, SEE "DOUBLE DIAPHRAGM DETAILS".

PROJECT NO. B-5362
MONTGOMERY COUNTY
STATION: 14+87.00 -L-

SHEET 6 OF 7

STATE OF NORTH CAROLINA
DEPARTMENT OF TRANSPORTATION
RALEIGH

3'-0" X 2'-9" PRESTRESSED CONCRETE BOX BEAM UNIT SPAN B

NORTH CAROLINA PROFESSIONAL SEAL 031583 ENGINEER KRISHNA PRASAD SEDAI

DocuSigned by: Krishna P. Sedai
EA6F704150BF4B7
8/15/2017

DOCUMENT NOT CONSIDERED FINAL UNLESS ALL SIGNATURES COMPLETED

REVISIONS							
NO.	BY:	DATE:	NO.	BY:	DATE:	SHEET NO.	
1			3			S-10	
2			4			TOTAL SHEETS	
						21	

DRAWN BY : A. SORSENGINH DATE : 7/2016
CHECKED BY : E. K. POPE DATE : 3/2017
DESIGN ENGINEER OF RECORD: H. A. LOCKLEAR DATE : 3/2017

15-AUG-2017 14:51
W:\Structures\Final Plans\401_019_B5362_SMU_BB_010_610053.dgn
ksedai