DocuSign Envelope ID: A8CED77C-838E-49A6-B6E0-945A74CBED81

8/17/99

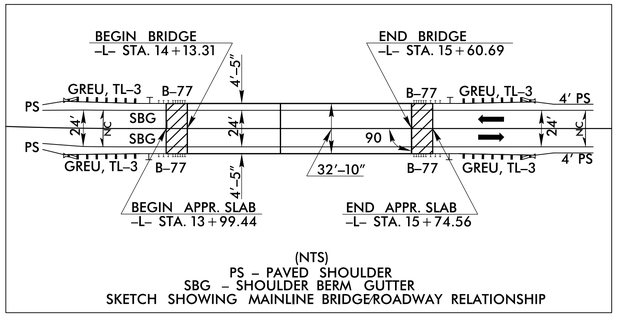

(NTS)
PS – PAVED SHOULDER
SBG – SHOULDER BERM GUTTER
SKETCH SHOWING MAINLINE BRIDGE/ROADWAY RELATIONSHIP

-L-
PI Sta 12+25.37
△ = 7° 28' 49.3" (LT)
D = 2° 30' 00.0"
L = 299.21'
T = 149.82'
R = 2,291.83'
SE SEE PLANS

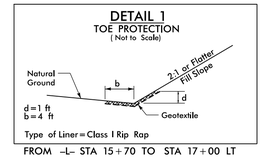

NAD 83/NA 2011

PROJECT REFERENCE NO.	SHEET NO.
B-5362	4
R/W SHEET NO.	
ROADWAY DESIGN ENGINEER	HYDRAULICS ENGINEER

NORTH CAROLINA PROFESSIONAL SEAL 043891 ENGINEER SEAN C. STEPHENS 8/31/2017

NORTH CAROLINA PROFESSIONAL SEAL 019721 ENGINEER WILLIAM H. ELAM 8/31/2017

DOCUMENT NOT CONSIDERED FINAL UNLESS ALL SIGNATURES COMPLETED

STV 100 Years
STV Engineers, Inc.
900 West Trade St., Suite 715
Charlotte, NC 28202
NC License Number F-0991

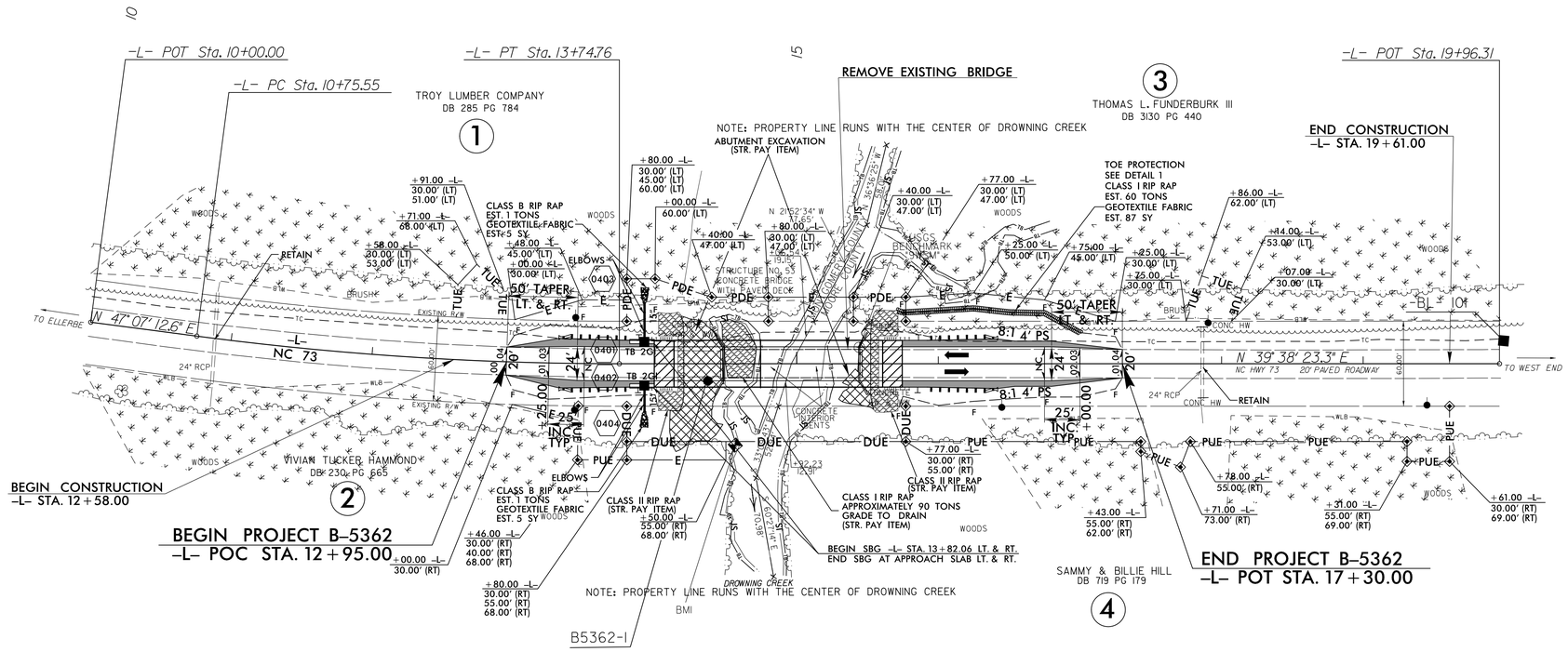

SEE SHEET 5 FOR -L- PROFILE
SEE SHEET S-1 THRU S-21 FOR STRUCTURE PLANS

7/26/2017
11:29:26 AM
S:\Projects\4018700\4018700.001\50_Deliverables & Submittals\B-5362\Roadway\Proj\B5362_Rdy_psh.dgn
sengupsc