DocuSign Envelope ID: 49787A84-D3B1-47FB-B813-F8C4724FCBEF

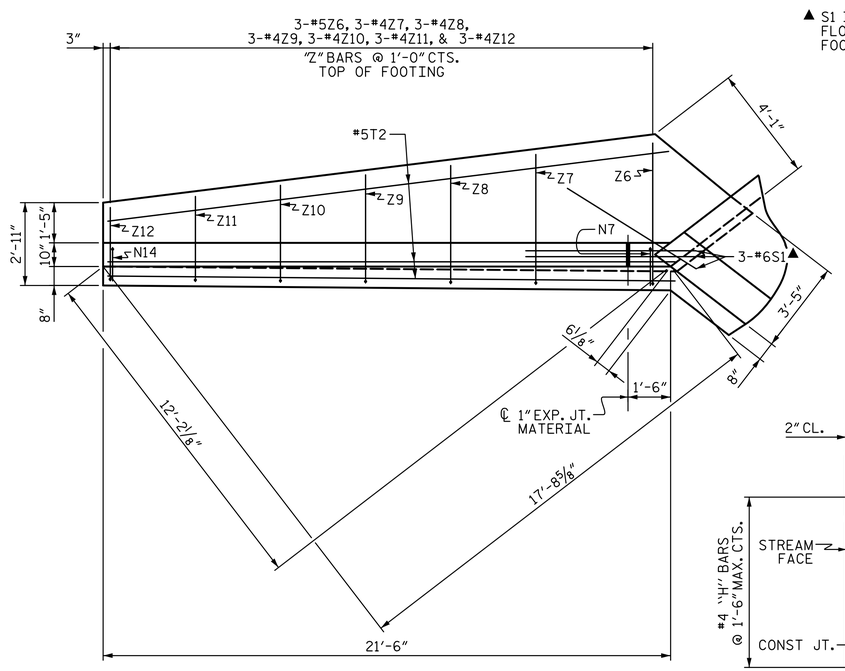

PLAN W1

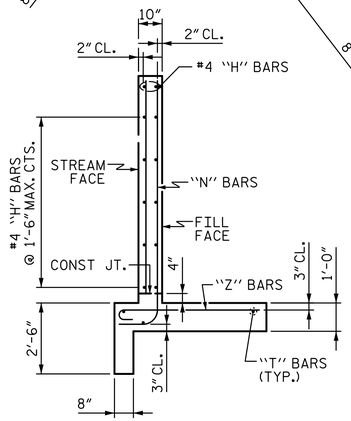

TYPICAL WING SECTION

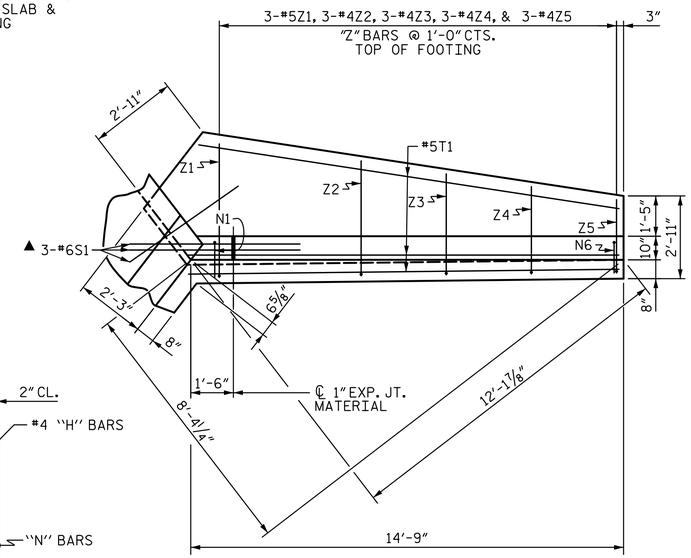

PLAN W2

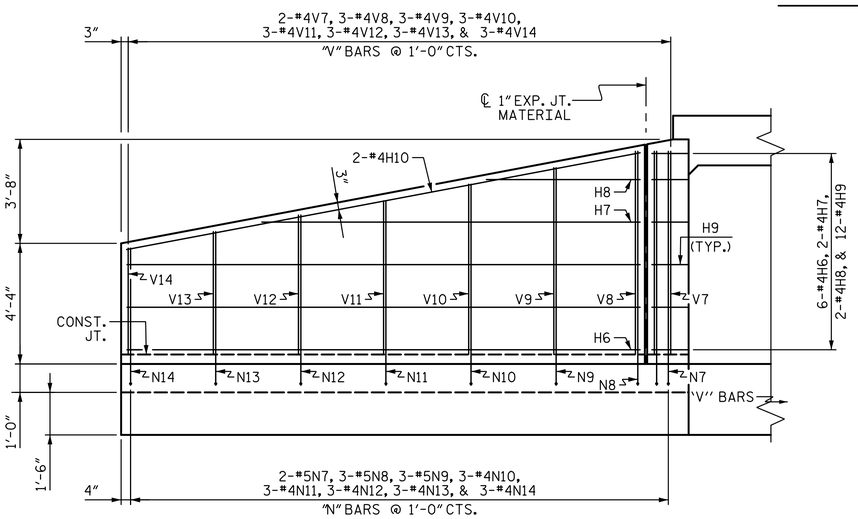

ELEVATION W1

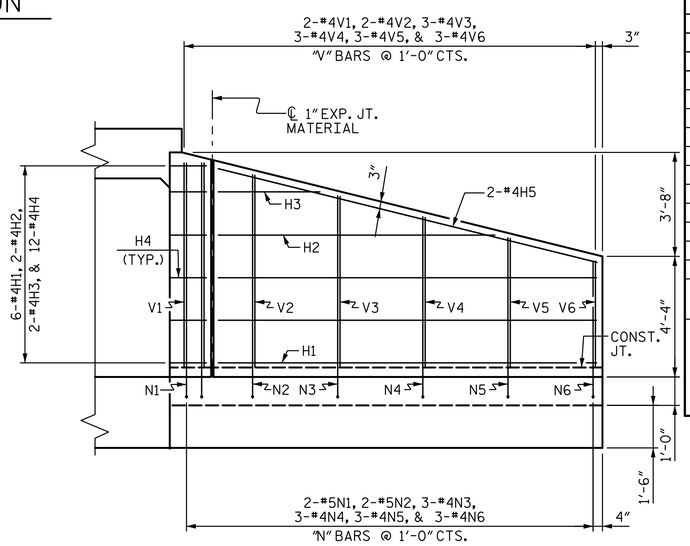

ELEVATION W2

BILL OF MATERIAL

BAR	NO.	SIZE	TYPE	LENGTH	WEIGHT
H1	12	#4	STR	12'-10"	103
H2	4	#4	STR	9'-9"	26
H3	4	#4	STR	3'-10"	10
H4	24	#4	1	3'-6"	56
H5	4	#4	STR	13'-3"	35
H6	12	#4	STR	19'-7"	157
H7	4	#4	STR	15'-0"	40
H8	4	#4	STR	6'-5"	17
H9	24	#4	2	3'-6"	56
H10	4	#4	STR	19'-11"	53
N1	4	#5	3	9'-4"	39
N2	4	#5	3	9'-0"	38
N3	6	#4	3	8'-3"	33
N4	6	#4	3	7'-6"	30
N5	6	#4	3	6'-8"	27
N6	6	#4	3	5'-11"	24
N7	4	#5	3	9'-5"	39
N8	6	#5	3	9'-1"	57
N9	6	#5	3	8'-7"	54
N10	6	#4	3	8'-0"	32
N11	6	#4	3	7'-6"	30
N12	6	#4	3	7'-0"	28
N13	6	#4	3	6'-5"	26
N14	6	#4	3	5'-11"	24
S1	12	#6	STR	6'-0"	108
T1	6	#4	STR	14'-5"	58
T2	6	#4	STR	21'-5"	86
V1	4	#4	STR	7'-3"	19
V2	4	#4	STR	6'-11"	18
V3	6	#4	STR	6'-2"	25
V4	6	#4	STR	5'-5"	22
V5	6	#4	STR	4'-7"	18
V6	6	#4	STR	3'-10"	15
V7	4	#4	STR	7'-4"	20
V8	6	#4	STR	7'-0"	28
V9	6	#4	STR	6'-6"	26
V10	6	#4	STR	5'-11"	24
V11	6	#4	STR	5'-5"	22
V12	6	#4	STR	4'-11"	20
V13	6	#4	STR	4'-4"	17
V14	6	#4	STR	3'-10"	15
Z1	6	#5	4	5'-3"	33
Z2	6	#4	4	4'-8"	19
Z3	6	#4	4	4'-1"	16
Z4	6	#4	4	3'-7"	14
Z5	6	#4	4	3'-1"	12
Z6	6	#5	4	5'-3"	33
Z7	6	#4	4	4'-10"	19
Z8	6	#4	4	4'-6"	18
Z9	6	#4	4	4'-2"	17
Z10	6	#4	4	3'-9"	15
Z11	6	#4	4	3'-5"	14
Z12	6	#4	4	3'-1"	12

REINFORCING STEEL
FOR 4 WINGS 1,797 LBS

CLASS A CONCRETE
4 WINGS 13.0 CY
2 HEADWALLS 1.2 CY
2 END CURTAIN WALLS ◆ 16.4 CY
TOTAL 30.6 CY

◆ INCLUDES WING FOOTINGS

BAR TYPES

ALL BAR DIMENSIONS ARE OUT TO OUT.

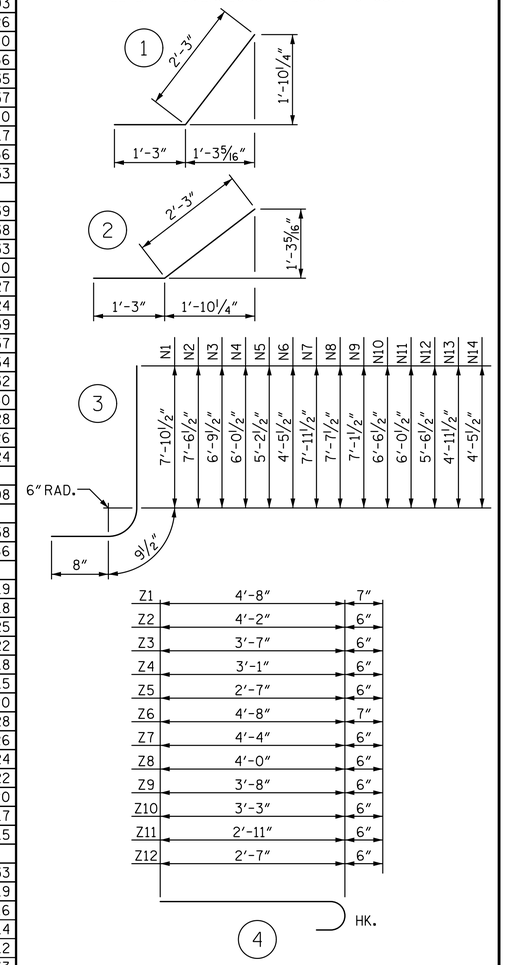

PROJECT NO. U-4751
NEW HANOVER COUNTY
STATION: 138+59.00 -L-

SHEET 4 OF 4

DOCUMENT NOT CONSIDERED FINAL UNLESS ALL SIGNATURES COMPLETED

NORTH CAROLINA PROFESSIONAL SEAL 036940 ENGINEER BRIAN M. CURRY
7/12/2017

STATE OF NORTH CAROLINA
DEPARTMENT OF TRANSPORTATION
RALEIGH

WINGS FOR
CONCRETE BOX CULVERT
H = 7'-0" SLOPE = 3:1
111°-00'-00" SKEW

STV 100 Years
STV ENGINEERS, INC.
900 West Trade St. Suite 715
Charlotte, NC 28202
NC License Number F-0991

REVISIONS							SHEET NO.
NO.	BY:	DATE:	NO.	BY:	DATE:		C2-4
1			3				TOTAL SHEETS
2			4				4

DRAWN BY : JWJ DATE : 5-17
CHECKED BY : MLO DATE : 5-17
DESIGN ENGINEER OF RECORD: J. JONES DATE : 5-17

bcurry 7/11/2017 3:17:00 PM I:\Projects\401867\401867_000\50_Deliverables & Submittals\U-4751\Structures\Culverts\CU #2\410_007_U4751_SMU_CU_004_640002.dgn