DocuSign Envelope ID: CA1BB324-315D-46FD-A866-5671445DBA5B

PROJECT REFERENCE NO.	SHEET NO.
U-4751	Sig. 5.1

EDI MODEL 2018ECLip-NC CONFLICT MONITOR PROGRAMMING DETAIL

(remove jumpers and set switches as shown)

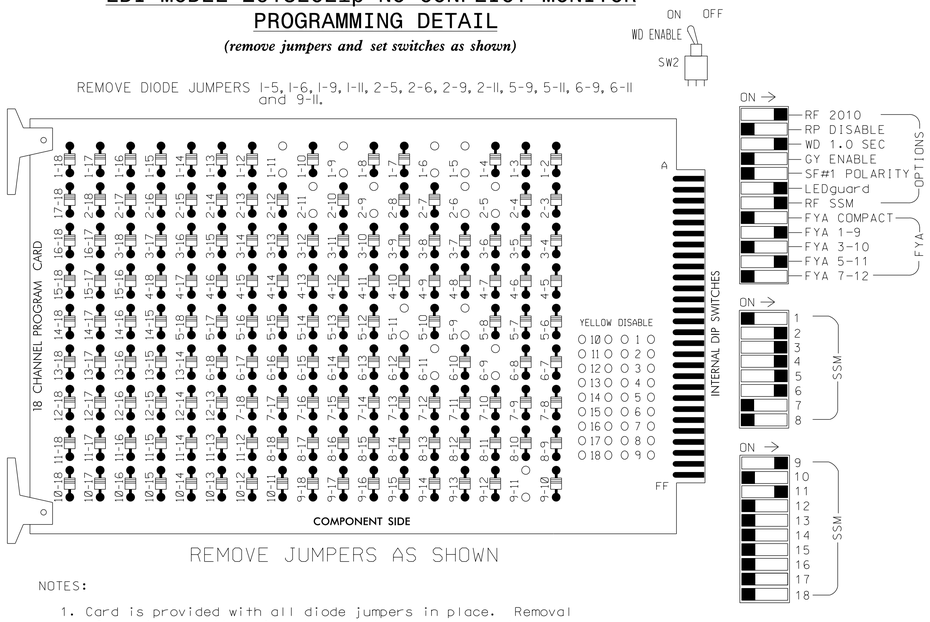

■ = DENOTES POSITION OF SWITCH

NOTES:

1. Card is provided with all diode jumpers in place. Removal of any jumper allows its channels to run concurrently.
2. Ensure jumpers SEL2-SEL5 and SEL9 are present on the monitor board.
3. Ensure that Red Enable is active at all times during normal operation.
4. Integrate monitor with Ethernet network in cabinet.

SIGNAL HEAD HOOK-UP CHART

LOAD SWITCH NO.	S1	S2	S3	S4				S5				S6	S7		S8	S9	S10	S11	S12	AUX S1	AUX S2	AUX S3	AUX S4	AUX S5	AUX S6
CMU CHANNEL NO.	1	2	13	3				4				14	5		6	15	7	8	16	9	10	17	11	12	18
PHASE	1	2	2 PED	3				4				4 PED	5		6	6 PED	7	8	8 PED	OLA	OLB	SPARE	OLC	OLD	SPARE
SIGNAL HEAD NO.	11★	21,22	NU	22	31	32	33	41	42	43	62	NU	43	51★	61,62	NU	NU	NU	NU	11★	NU	NU	51★	NU	NU
RED		128				116	116		101	101			*		134										
YELLOW	*	129				117	117		102	102					135										
GREEN		130				118	118		103	103					136										
RED ARROW					116			101												A121			A114		
YELLOW ARROW				117	117			102			102		132							A122			A115		
FLASHING YELLOW ARROW																				A123			A116		
GREEN ARROW	127			118	118	118		103	103		103		133	133											
✋																									
🚶																									

NU = Not Used

* Denotes install load resistor. See load resistor installation detail this sheet.

★ See pictorial of head wiring in detail below.

EQUIPMENT INFORMATION

CONTROLLER.....2070E
CABINET.....332 W/ AUX
SOFTWARE.....ECONOLITE OASIS
CABINET MOUNT.....BASE
OUTPUT FILE POSITIONS...18 WITH AUX. OUTPUT FILE
LOAD SWITCHES USED.....S1,S2,S4,S5,S7,S8,AUX S1,AUX S4.
PHASES USED.....1,2,3,4,5,6.
OVERLAP "A".....1+2
OVERLAP "B".....NOT USED
OVERLAP "C".....5+6
OVERLAP "D".....NOT USED

NOTES

1. To prevent "flash-conflict" problems, insert red flash program blocks for all unused vehicle load switches in the output file. The installer shall verify that signal heads flash in accordance with the Signal Plans.
2. Enable Simultaneous Gap-Out for all phases.
3. Program phases 2 and 6 for Variable Initial and Gap Reduction.
4. Program phases 2 and 6 for Start Up In Green.
5. Program phases 2 and 6 for Yellow Flash and overlap 1 as Wag Overlaps.
6. The cabinet and controller are part of the Wilmington Signal System.

INPUT FILE POSITION LAYOUT

(front view)

		1	2	3	4	5	6	7	8	9	10	11	12	13	14
"I"	U	Ø1	Ø2	Ø3	WIRED INPUT ⊗	Ø3	Ø3	Ø4	SLOT EMPTY	SLOT EMPTY	SLOT EMPTY	SLOT EMPTY	SLOT EMPTY	SLOT EMPTY	FS
		1A	2A	3A		3C	3D	4B							DC ISOLATOR
	L	NOT USED	Ø2	Ø3		NOT USED	Ø4	Ø4							ST
			2B	3B			4A	4C							DC ISOLATOR
FILE "J"	U	Ø5	Ø5	Ø6	WIRED INPUT ⊗	SLOT EMPTY	SLOT EMPTY	SLOT EMPTY	SLOT EMPTY	SLOT EMPTY	SLOT EMPTY	SLOT EMPTY	SLOT EMPTY	SLOT EMPTY	SLOT EMPTY
		5A	5B	6A											
	L	NOT USED	Ø5	Ø6											
			5C	6B											

EX.: 1A, 2A, ETC. = LOOP NO.'S

FS = FLASH SENSE
ST = STOP TIME

⊗ Wired Input - Do not populate slot with detector card

INPUT FILE CONNECTION & PROGRAMMING CHART

LOOP NO.	LOOP TERMINAL	INPUT FILE POS.	PIN NO.	INPUT ASSIGNMENT NO.	DETECTOR NO.	NEMA PHASE	CALL	EXTEND	FULL TIME DELAY	STRETCH TIME	DELAY TIME
1A[1]	TB2-1,2	I1U	56	18	1	1	Y	Y			15
	-	J4U	48	10★	26	6	Y	Y	Y		3
	-	I1U	56	18★	51	1	Y	Y			
2A	TB2-5,6	I2U	39	1	2	2	Y	Y			
2B	TB2-7,8	I2L	43	5	12	2	Y	Y			
3A	TB2-9,10	I3U	63	25	32	3	Y	Y			
3B	TB2-11,12	I3L	76	38	42	3	Y	Y			
3C	TB4-5,6	I5U	58	20	3	3	Y	Y			10
3D	TB4-9,10	I6U	41	3	4	3	Y	Y			20
4A	TB4-11,12	I6L	45	7	14	4	Y	Y			
4B	TB6-1,2	I7U	65	27	34	4	Y	Y			
4C	TB6-3,4	I7L	78	40	44	4	Y	Y			
5A[2]	TB3-1,2	J1U	55	17	5	5	Y	Y			15
	-	I4U	47	9★	22	2	Y	Y	Y		3
	-	J1U	55	17★	55	5	Y	Y			
5B	TB3-5,6	J2U	40	2	6	5	Y	Y			15
5C	TB3-7,8	J2L	44	6	16	5	Y	Y			25
6A	TB3-9,10	J3U	64	26	36	6	Y	Y			
6B	TB3-11,12	J3L	77	39	46	6	Y	Y			

[1] Add jumper from I1-W to J4-W, on rear of input file.

[2] Add jumper from J1-W to I4-W, on rear of input file.

★ See Input Page Assignment programming details on sheets 3 and 4.

INPUT FILE POSITION LEGEND: J2L
FILE J
SLOT 2
LOWER

4 SECTION FYA SIGNAL WIRING DETAIL

(wire signal heads as shown)

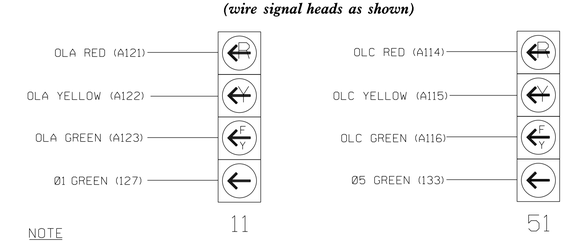

NOTE

1. The sequence display for signal heads 11 and 51 requires special logic programming. See sheet 2 of 5 for programming instructions.

DOCUMENT NOT CONSIDERED FINAL UNLESS ALL SIGNATURES COMPLETED

LOAD RESISTOR INSTALLATION DETAIL

(install resistors as shown below)

ACCEPTABLE VALUES

VALUE (ohms)	WATTAGE
1.5K - 1.9K	25W (min)
2.0K - 3.0K	10W (min)

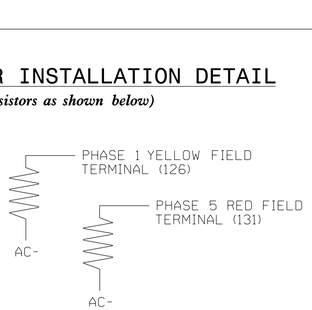

THIS ELECTRICAL DETAIL IS FOR
THE SIGNAL DESIGN: 03-0390T1
DESIGNED: April 2017
SEALED:
REVISED:

ATKINS 1616 EAST MILLBROOK ROAD, SUITE 160
RALEIGH, NORTH CAROLINA 27609
(919) 876-6888 NCBEES #F-0326

Signal Upgrade - Temporary Design (Electrical Detail Sheet 1 of 5)

ELECTRICAL AND PROGRAMMING DETAILS FOR:

Prepared for the Offices of:
Transportation Mobility and Safety Division
STATE OF NORTH CAROLINA DEPARTMENT OF TRANSPORTATION
Signal Design Section
750 N.Greenfield Pkwy,Garner,NC 27529

US 17 Business (Market Street) at SR 2048 (Gordon Road)

Division 03 New Hanover County Wilmington

PLAN DATE: April 2017	REVIEWED BY:	MB Toth	
PREPARED BY: AM Encarnacion	REVIEWED BY:		

REVISIONS	INIT.	DATE

Melissa B. Toth 6/6/2017
DOCUSIGNED BY: SIGNATURE DATE

SEAL
NORTH CAROLINA PROFESSIONAL SEAL 025892 ENGINEER MELISSA B. TOTH

SIG. INVENTORY NO. 03-0390T1

06-JUN-2017 13:48
D:\Transportation\Traffic\Curr\100053597 - U-4751 Military Cutoff\02-Signals\Design\01 Wiring\03-0390ET1.dgn
encd5386 AT LU5290321