| PROJECT REFERENCE NO. | SHEET NO. |
|---|---|
| U-4751 | EC-2A |
| R/W SHEET NO. | |

STV 100 Years — STV Engineers, Inc. 900 West Trade St., Suite 715 Charlotte, NC 28202 NC License Number F-0991

# EARTHEN DAM WITH SKIMMER DETAIL (EAST)

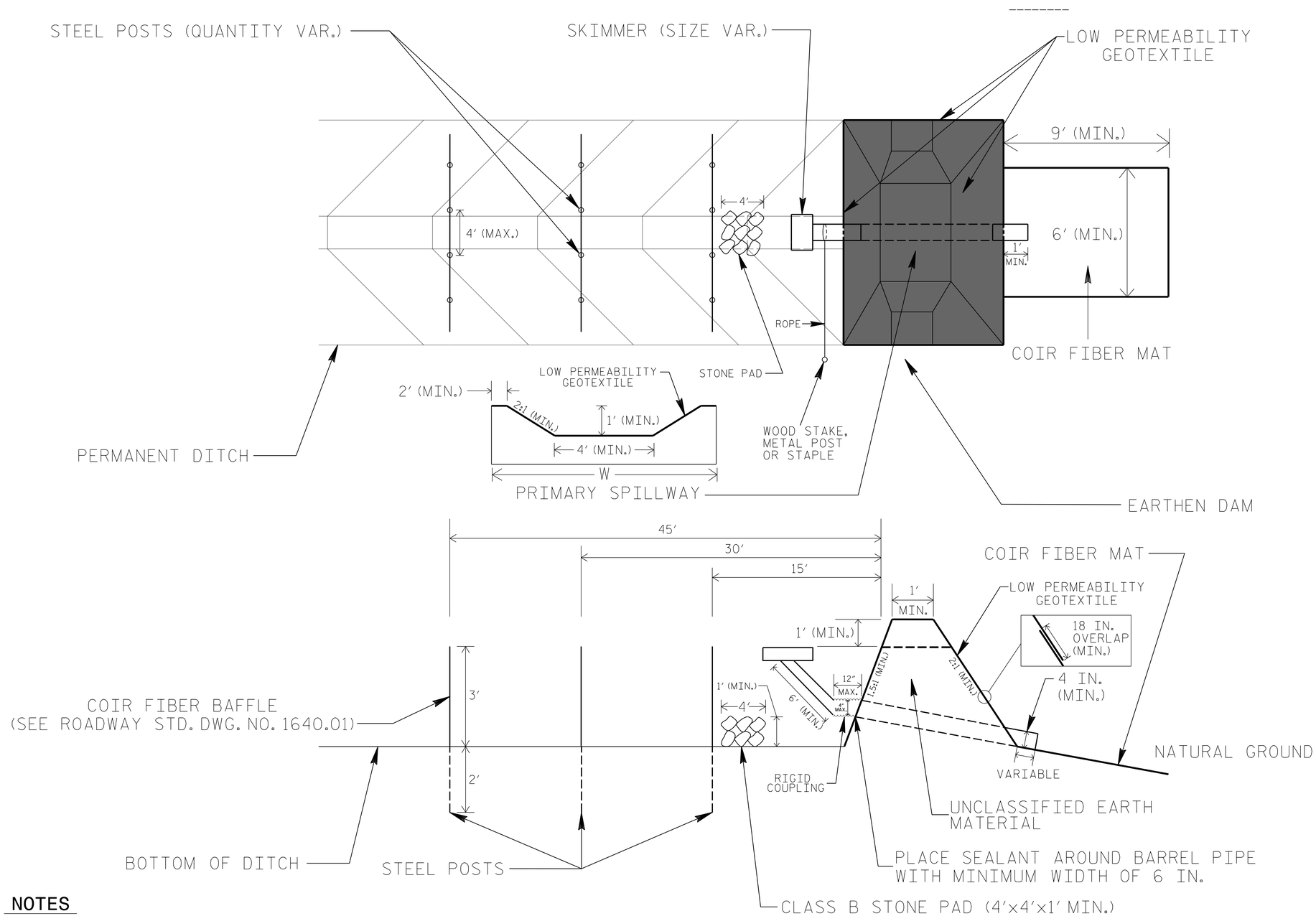


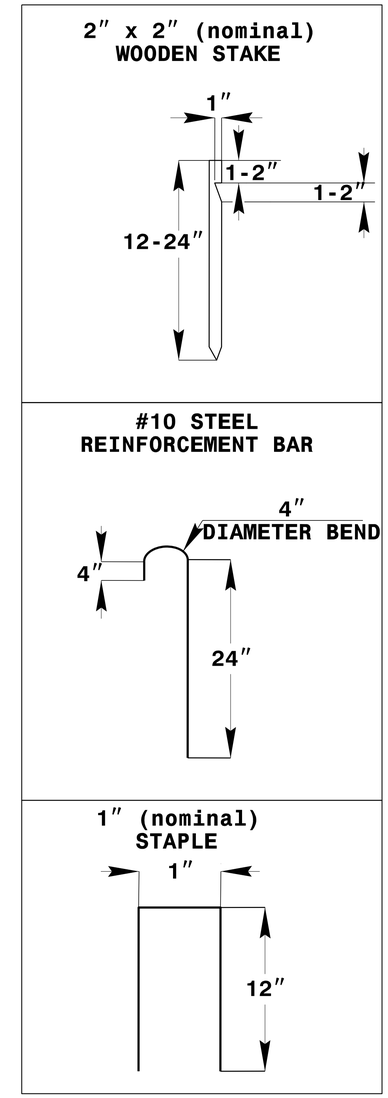


## COIR FIBER MAT ANCHOR OPTIONS

NOTES

1. LIMIT EARTHEN DAM HEIGHT TO 5 FT.
2. DETERMINE PRIMARY SPILLWAY LENGTH (FT.) USING Q/0.8, WHERE Q IS FLOW RATE (CFS) INTO BASIN.
3. LOW PERMEABILITY GEOTEXTILE FOR PRIMARY SPILLWAY SHALL BE ONE CONTINUOUS PIECE OF MATERIAL OR OVERLAPPED 18 IN. (MIN.).

NOT TO SCALE