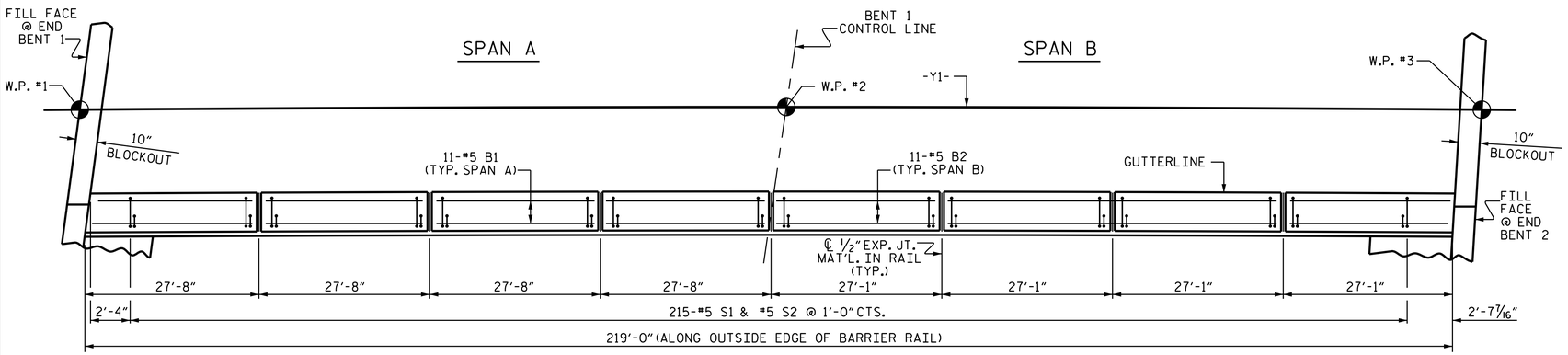

PLAN OF CONCRETE BARRIER RAIL

(RIGHT SIDE BARRIER RAIL SHOWN, LEFT SIDE SIMILAR)

NOTES

THE BARRIER RAIL IN THE CONTINUOUS UNIT SHALL NOT BE CAST UNTIL ALL SLAB CONCRETE IN THAT SPAN HAS BEEN CAST AND HAS REACHED A MINIMUM COMPRESSIVE STRENGTH OF 3,000 PSI.

ALL REINFORCING STEEL IN BARRIER RAILS SHALL BE EPOXY COATED.

GROOVED CONTRACTION JOINTS, 1/2" IN DEPTH, SHALL BE TOOLED IN ALL EXPOSED FACES OF THE BARRIER RAIL AND IN ACCORDANCE WITH ARTICLE 825-10(B) OF THE STANDARD SPECIFICATIONS. THE CONTRACTION JOINT SHALL BE LOCATED AT EACH THIRD POINT BETWEEN BARRIER RAIL EXPANSION JOINTS. ONLY ONE CONTRACTION JOINT IS REQUIRED AT MIDPOINT OF BARRIER RAIL SEGMENTS LESS THAN 20 FEET IN LENGTH AND NO CONTRACTION JOINTS ARE REQUIRED FOR THOSE SEGMENTS LESS THAN 10 FEET IN LENGTH.

THE #5 S1 AND #5 S2 BARS MAY BE SHIFTED SLIGHTLY IN ORDER TO MAINTAIN 2" MINIMUM CLEARANCE TO THE 1/2" EXPANSION JOINT MATERIAL IN THE BARRIER RAIL.

BAR TYPES

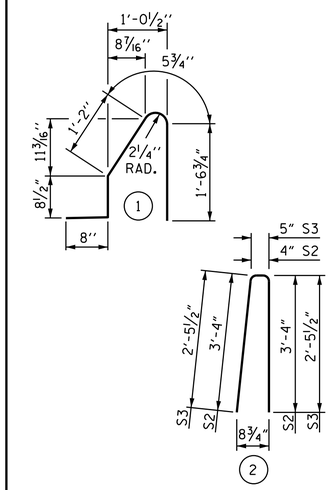

ALL BAR DIMENSIONS ARE OUT TO OUT.

BILL OF MATERIAL

FOR CONCRETE BARRIER RAIL ONLY

BAR	NO.	SIZE	TYPE	LENGTH	WEIGHT
* B1	88	#5	STR	27'-3"	2501
* B2	88	#5	STR	26'-8"	2448
* S1	438	#5	1	4'-7"	2094
* S2	430	#5	2	7'-0"	3139
* S3	8	#5	2	5'-4"	45

* EPOXY COATED REINFORCING STEEL	LBS.	10,227
CLASS AA CONCRETE	C.Y.	59.6
CONCRETE BARRIER RAIL	LIN. FT.	438.00

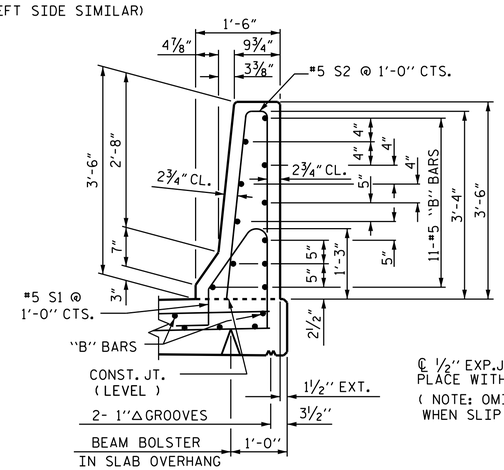

SECTION THRU RAIL

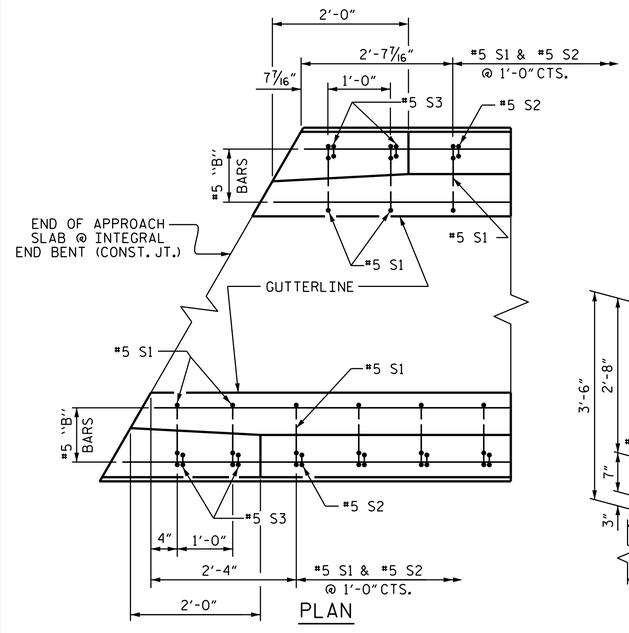

PLAN

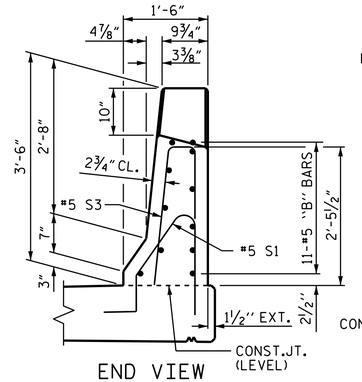

END VIEW

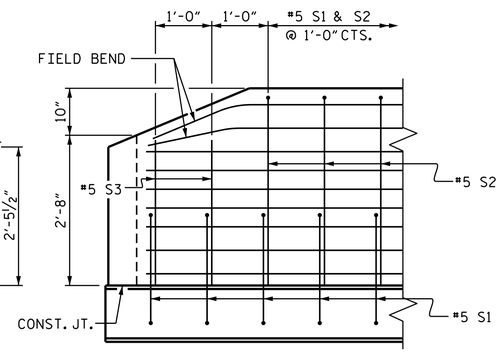

SIDE VIEW

END OF RAIL DETAILS

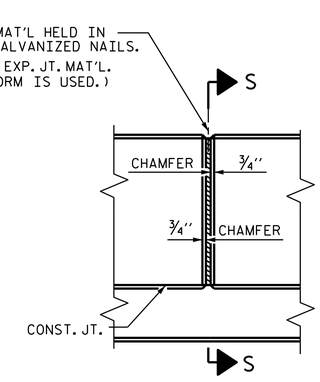

ELEVATION AT EXPANSION JOINTS

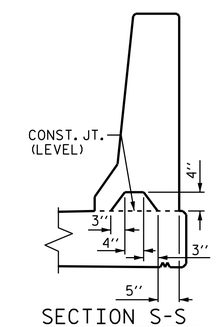

SECTION S-S

AT DAM IN OPEN JOINT (THIS IS TO BE USED ONLY WHEN SLIP FORM IS USED)

BARRIER RAIL DETAILS

PROJECT NO. U-2579C

FORSYTH COUNTY

STATION: 29+24.97 -Y1-

NORTH CAROLINA PROFESSIONAL SEAL 20125 ENGINEER MARSHALL G. CHEEK, JR.

DocuSigned by: Marshall G. Cheek, Jr.
6549D6EBAA3B405...

7/27/2017

STATE OF NORTH CAROLINA
DEPARTMENT OF TRANSPORTATION
RALEIGH

3'-6" CONCRETE BARRIER RAIL

DRAWN BY : J.P. MCCARTHA DATE : 4/26/16
CHECKED BY : H.A. LOCKLEAR DATE : 8/26/16

DOCUMENT NOT CONSIDERED FINAL UNLESS ALL SIGNATURES COMPLETED

REVISIONS							SHEET NO.
NO.	BY:	DATE:	NO.	BY:	DATE:		S1-18
1			3				TOTAL SHEETS
2			4				32

26-JUL-2017 15:04
R:\Structures\FINAL PLANS\401_035_U2579C_SMU_BR_018_330700.dgn
mcheek

STR. #1