5/14/99

PROJECT REFERENCE NO.	SHEET NO.
I-5852B	8

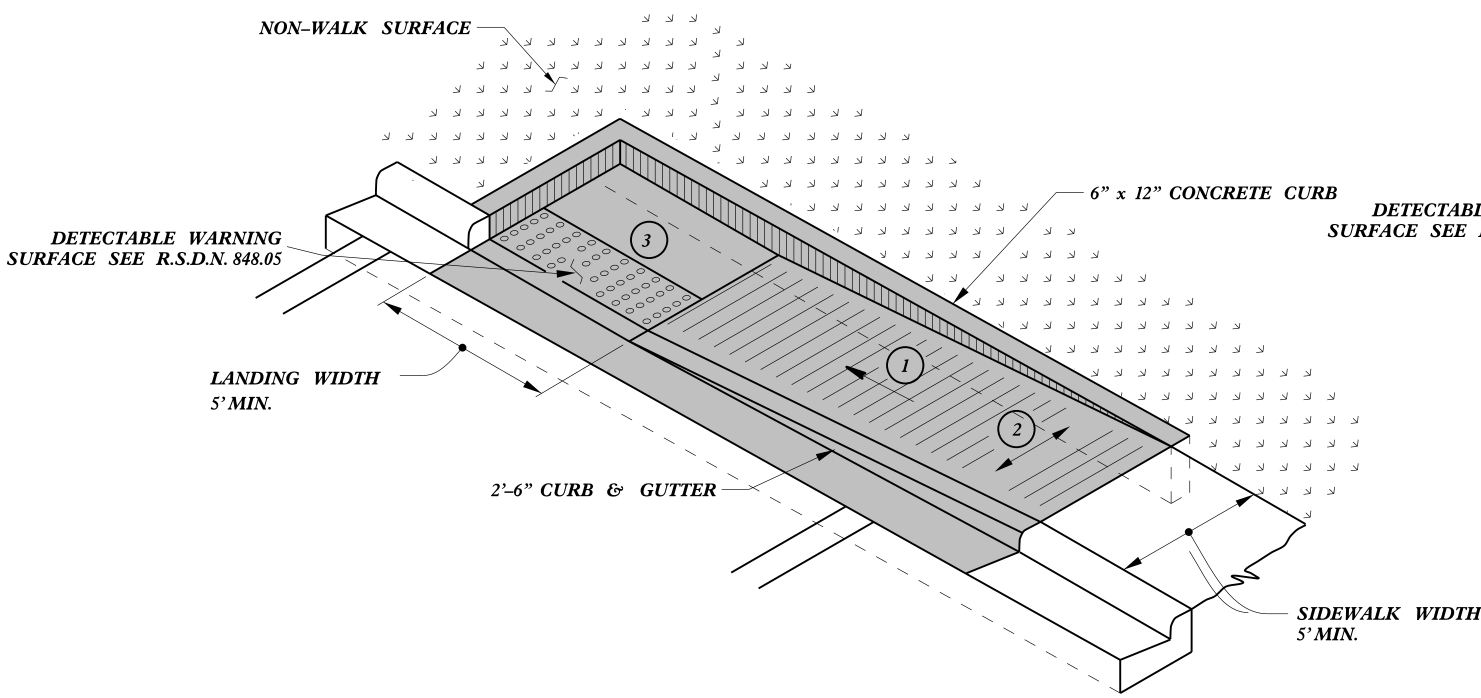

TYPE 1A

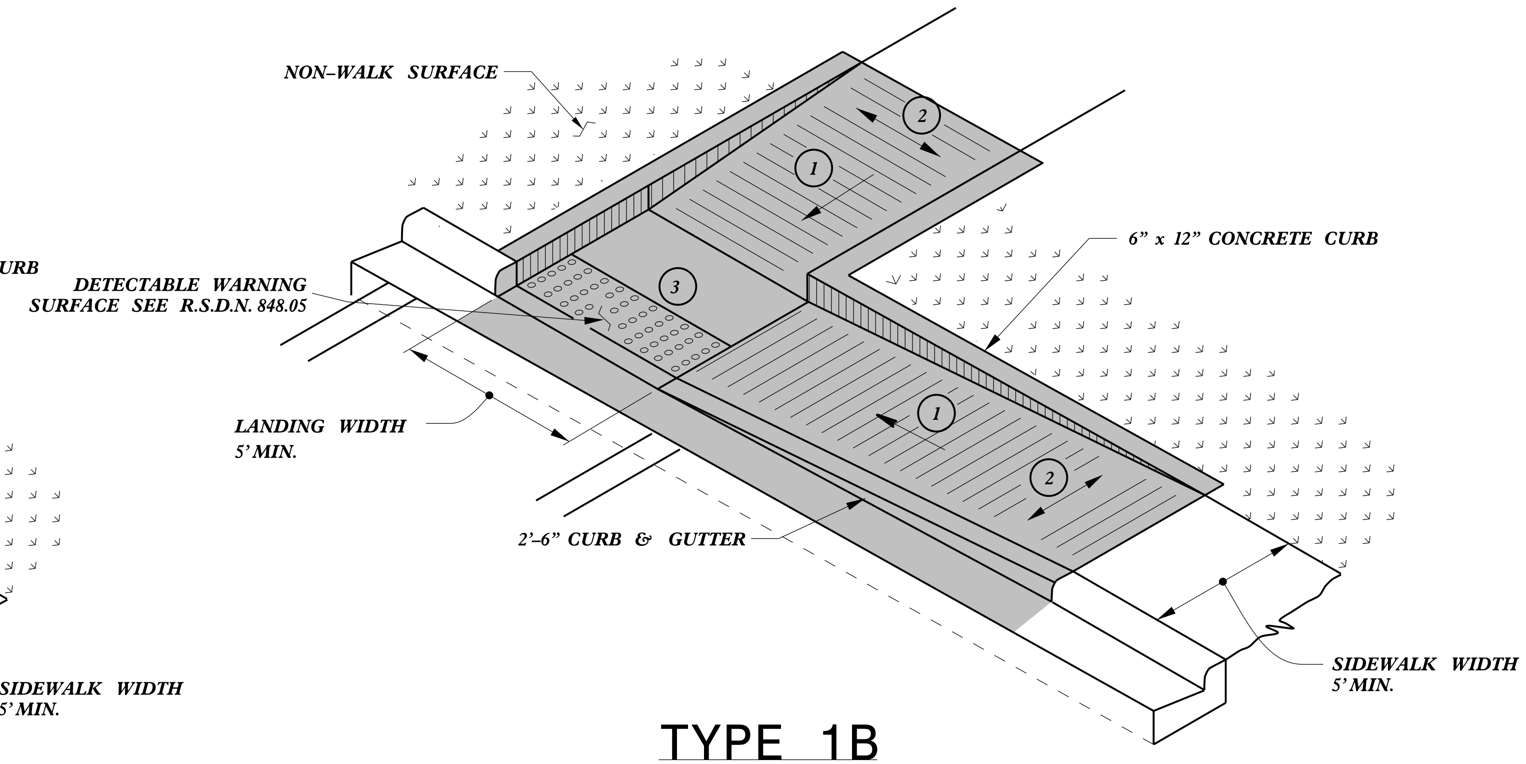

TYPE 1B

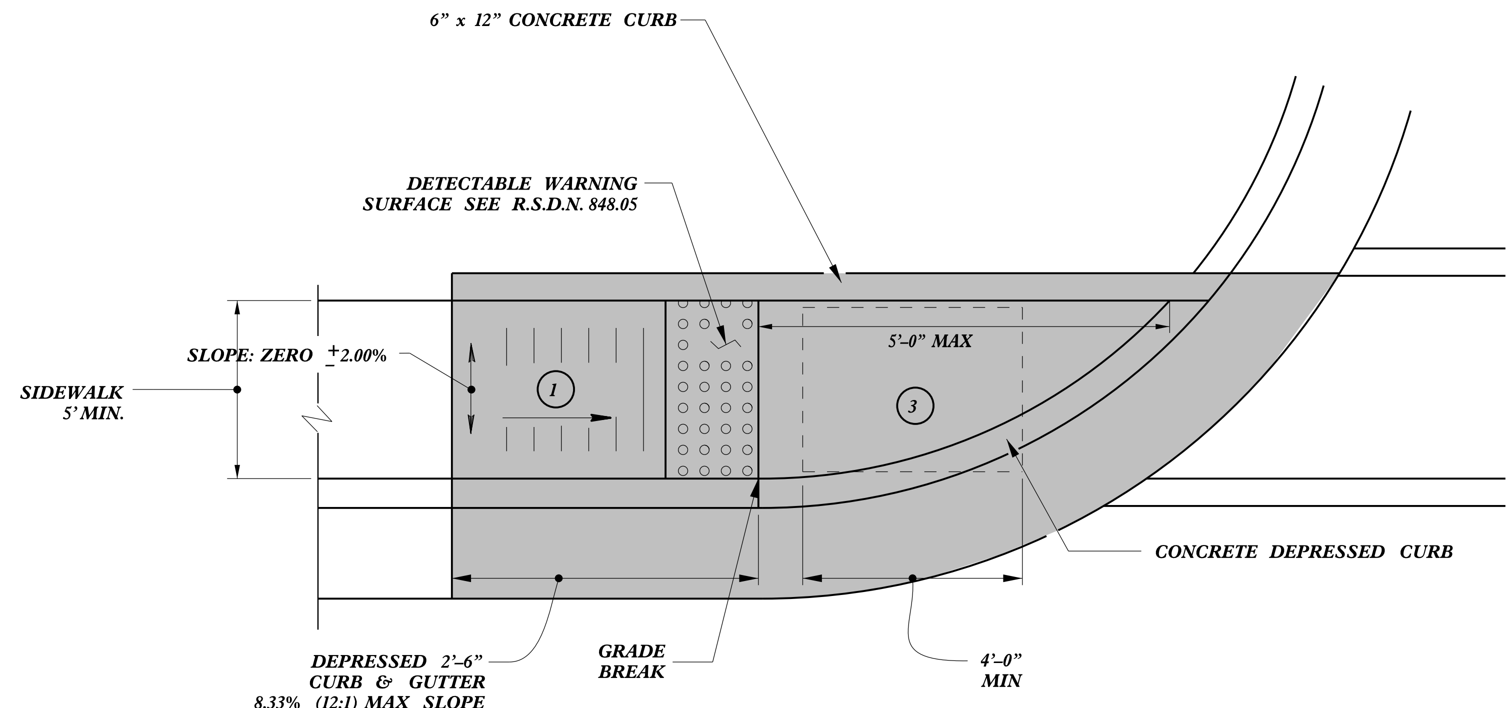

TYPE 1

PAY LIMITS FOR 1 CURB RAMP

1. *8.33% (12:1) MAX RAMP SLOPE*
2. *CROSS SLOPE: 2.00%*
3. *CURB RAMPS REQUIRE A (4'–0") MINIMUM LANDING WITH A MAXIMUM CROSS SLOPE AND LONGITUDINAL SLOPE OF 2.00% WHERE PEDESTRIANS PERFORM TURNING MANEUVERS. SLOPE TO DRAIN TO CURB.*

REFER TO ROADWAY STANDARD DRAWING NUMBER 848.05 SHEET 3 OF 3 FOR ALL RAMP NOTES

NORTH CAROLINA PROFESSIONAL SEAL 022966 ENGINEER Joel S. Howerton

DocuSigned by:
Joel S Howerton
449E8E25522144F...
11/18/2015

DOCUMENT NOT CONSIDERED FINAL UNLESS ALL SIGNATURES COMPLETED

CONTRACT STANDARDS AND DEVELOPMENT UNIT
Office 919-707-6950 FAX 919-250-4119

CURB RAMPS

Directional Ramps

ORIGINAL BY: J.S. HOWERTON DATE: 7/7/11
MODIFIED BY: DATE:
CHECKED BY: DATE:
FILE SPEC.: stds/2012CurbRamp/CurbRampDetails.dgn

$$$$$$SYSTIME$$$$$
$$$$$$$$$$$$$$$DGN$$$$$$$$$$$$$$$$
$$$$$USERNAME$$$$