DocuSign Envelope ID: 79972C91-246F-4C97-A8F3-5247A1BF50AC

NOTES

THE CONCRETE IN THE SHADED AREA OF THE WING SHALL BE POURED AFTER THE BARRIER RAILS ARE CAST IF SLIP FORMING IS USED.

INSTALL THE 4" DIA. DRAIN PIPE THROUGH THE WING WALL AS REQUIRED FOR REINFORCED BRIDGE APPROACH FILLS, SEE THE ROADWAY PLANS. REINFORCING STEEL IN THE WING WALL MAY BE SHIFTED AS NECESSARY TO CLEAR THE DRAIN PIPE.

THE TOP SURFACE OF THE END BENT CAP WITHIN THE LIMITS OF THE INTEGRAL ABUTMENT, EXCEPT THE BEARING AREA, SHALL BE RAKED TO A DEPTH OF 1/4".

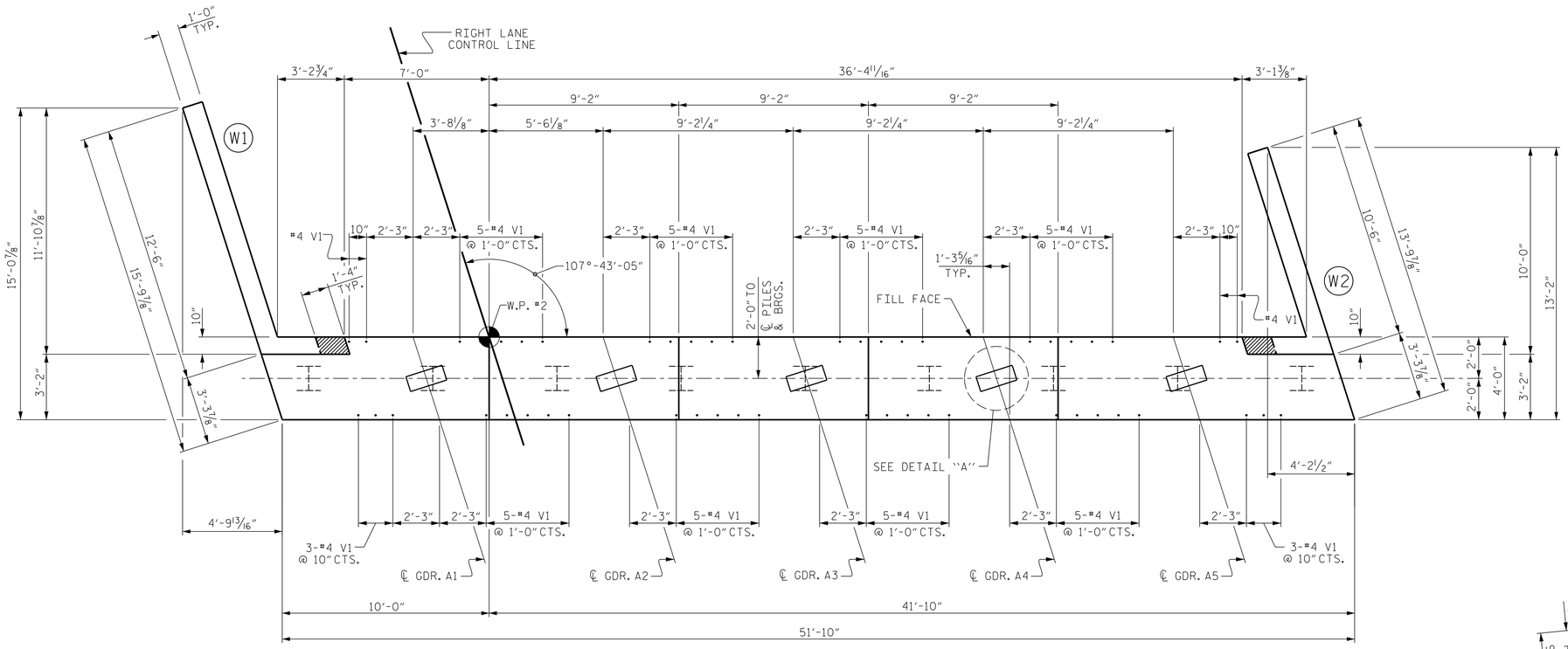

PLAN

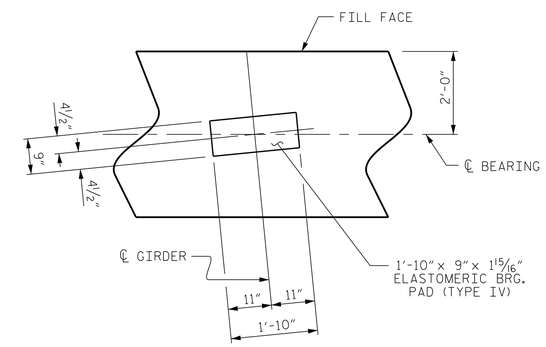

DETAIL A

(TYP. EACH GIRDER)

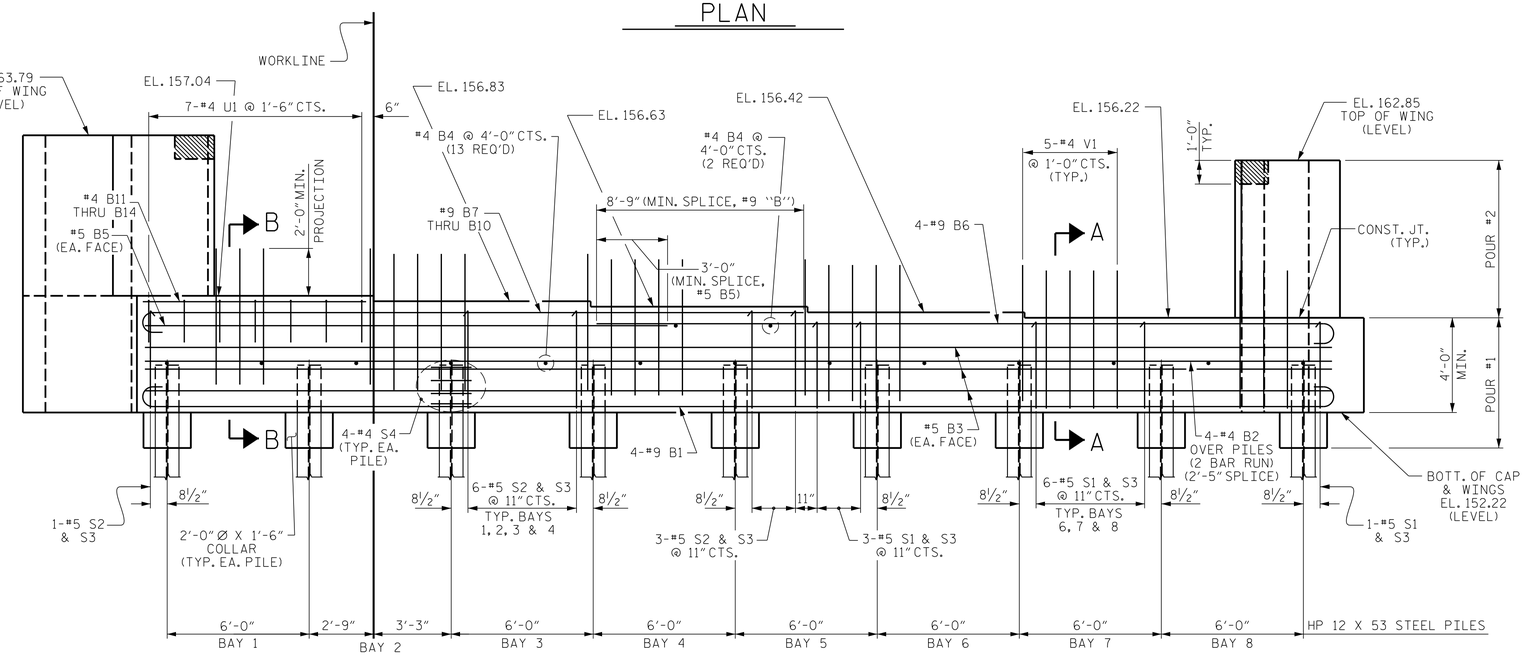

ELEVATION

FOR SECTIONS A-A & B-B, SEE SHEET 3 OF 3.

PROJECT NO. R-5719

WAYNE COUNTY

STATION: 39+11.12 -L-

SHEET 1 OF 3

ENGINEER OF RECORD
12/12/2016
NORTH CAROLINA PROFESSIONAL SEAL 14091 ENGINEER BUCK CHARLES HUNT

DocuSigned by: Buck Charles Hunt
2F15C83973BA4EC...

WETHERILL ENGINEERING
1223 Jones Franklin Rd.
Raleigh, N.C. 27606
Bus: 919 851 8077
Fax: 919 851 8107
LICENSE NO. F-0377

STATE OF NORTH CAROLINA
DEPARTMENT OF TRANSPORTATION
RALEIGH

SUBSTRUCTURE
END BENT No. 2
(RIGHT LANE)

REVISIONS						SHEET NO.
NO.	BY:	DATE:	NO.	BY:	DATE:	S02-20
1			3			TOTAL SHEETS
2			4			26

DRAWN BY : D. HODGE DATE : 2/16
CHECKED BY : J. DILWORTH DATE : 2/16

DOCUMENT NOT CONSIDERED FINAL UNLESS ALL SIGNATURES COMPLETED

P:\2015\R-5719\Structures\DGN\Right Lane\R-5719_RT_EBT_WE1.dgn
12/6/2016 2:23:10 PM