DocuSign Envelope ID: 0F035A2F-A524-4261-8D21-CCCC4EFAF04A

5/14/99

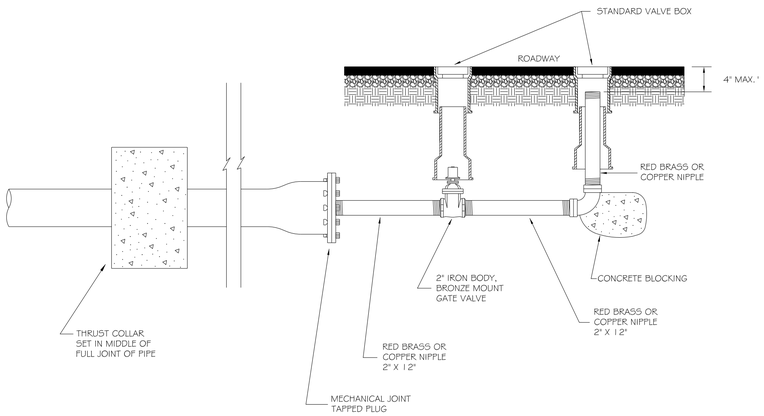

STANDARD 2" BLOW OFF DETAIL

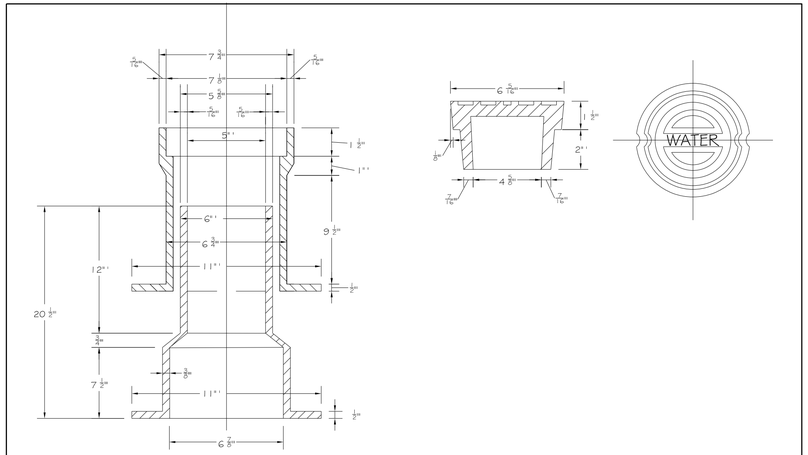

NOTES:
1. VALVE BOX SHALL BE TELESCOPIC WITH SCREWW TYPE ADJUSTMENT.
2. VALVE BOX SHALL BE CAST FROM ASTM A-48, CLASS 30 IRON AND SHALL BE FULLY BITUMINOUS COATED FOR DIRECT BURIAL.

STANDARD VALVE BOX DETAIL

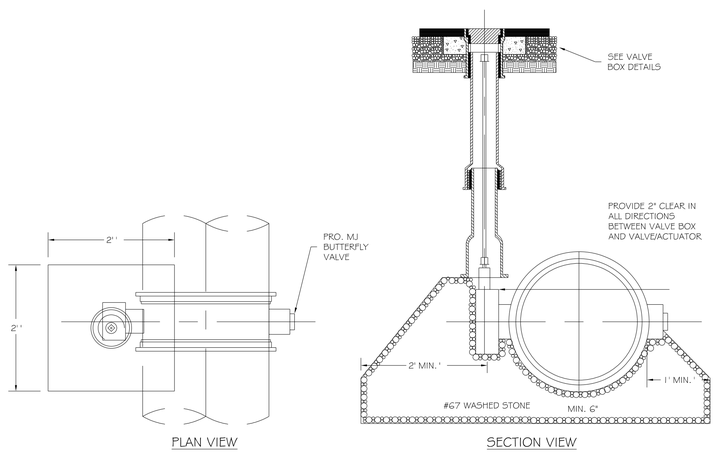

BUTTERFLY VALVE DETAIL

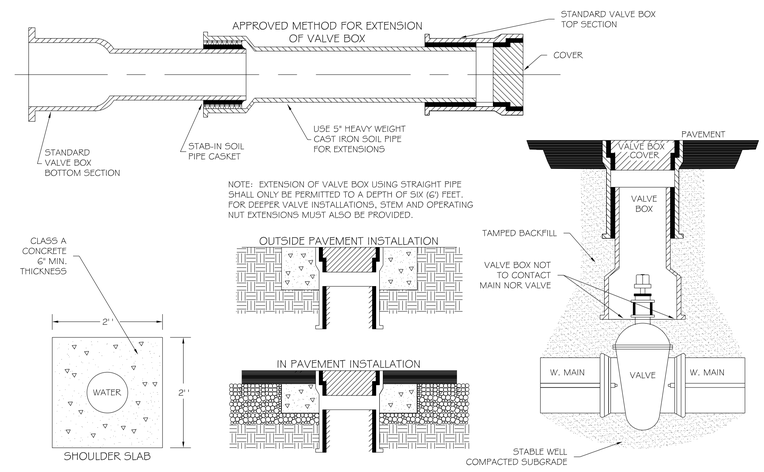

STANDARD VALVE BOX INSTALLATION DETAIL

PROJECT REFERENCE NO.	SHEET NO.
U-3621A	UC-3F

DESIGNED BY: GJB
DRAWN BY: GJB
CHECKED BY: KCZ
APPROVED BY: KCZ
REVISED:

NORTH CAROLINA DEPARTMENT OF TRANSPORTATION
UTILITIES ENGINEERING SEC.
PHONE:(919)707-6690
FAX:(919)250-4151

NORTH CAROLINA PROFESSIONAL SEAL 022661 ENGINEER KEVIN C. ZOEB
Kevin C. Zoeb
2/22/2017

UTILITY CONSTRUCTION PLANS ONLY

UTILITY CONSTRUCTION

DOCUMENT NOT CONSIDERED FINAL UNTIL ALL SIGNATURES ARE COMPLETED

M A Engineering Consultants, Inc.
598 East Chatham Street - Suite 137
Cary, NC 27511
Phone: 919.297.0220 Fax: 919.297.0221
NC License: F-0160